DRAFT ENVIRONMENTAL ASSESSMENT
BNSF Sandpoint Junction Connector Project

Bonner County, Idaho

Preliminary Draft for Agency Review

U.S. Coast Guard
District Thirteen
Seattle, Washington

November 9, 2018

TABLE OF CONTENTS

ABBREVIATIONS AND ACRONYMS vi
EXECUTIVE SUMMARY ix
1.0 INTRODUCTION 1
1.1 Site Location and Existing Structure 2
1.1.1 Site Location 2
1.1.2 Existing Conditions and Structures 4
1.2 Purpose and Need 5
1.2.1 Background 5
1.2.2 Problem Definition 5
1.2.3 Project Purpose 7
2.0 ALTERNATIVES 8
2.1 Alternatives Eliminated from Further Consideration 8
2.1.1 New Track East of the Existing Main Line Track 10
2.1.2 Off-Site/Outside Existing BNSF Right-of-Way 11
2.1.3 Grade-Separated Crossings 12
2.2 Analyzed Alternative 1 – No Action Alternative 12
2.3 Analyzed Alternative 2 – Proposed Action Alternative 13
2.3.1 Construction Process 16
2.3.2 Temporary Work Bridge Demolition 21
2.3.3 Site Rehabilitation 21
2.3.4 Construction Equipment 22
2.3.5 Construction Schedule and Design Year 23
3.0 AFFECTED ENVIRONMENT AND ENVIRONMENTAL CONSEQUENCES 24
3.1 Air Quality 24
3.1.1 Affected Environment 25
3.1.2 Environmental Consequences 27
3.2 Geology, Soils, and Topography 28
3.2.1 Affected Environment 28
3.2.2 Environmental Consequences 29
3.3 Water Resources and Water Quality 30
3.3.1 Affected Environment 30
3.3.2 Environmental Consequences 33
3.4 Wetlands 36
3.4.1 Affected Environment 36
3.4.2 Environmental Consequences 36

Preliminary Draft for Agency Review

TABLE OF CONTENTS (CONTINUED)

3.5 Floodplains 37
3.5.1 Affected Environment 37
3.5.2 Environmental Consequences 39
3.6 Vegetation 40
3.6.1 Affected Environment 40
3.6.2 Environmental Consequences 41
3.7 Fish and Wildlife 42
3.7.1 Affected Environment 42
3.7.2 Environmental Consequences 46
3.8 Endangered Species Act Listed Species and Critical Habitat 50
3.8.1 Affected Environment 50
3.8.2 Environmental Consequences 54
3.9 Archaeological and Historic Resources 57
3.9.1 Affected Environment 58
3.9.2 Environmental Consequences 58
3.10 Environmental Justice 60
3.10.1 Affected Environment 61
3.10.2 Environmental Consequences 61
3.11 Land Use and Recreation 61
3.11.1 Affected Environment 62
3.11.2 Environmental Consequences 63
3.12 Visual Quality 64
3.12.1 Affected Environment 64
3.12.2 Environmental Consequences 65
3.13 Noise 66
3.13.1 Affected Environment 66
3.13.2 Environmental Consequences 66
3.14 Hazardous Materials and Wastes 68
3.14.1 Affected Environment 74
3.14.2 Environmental Consequences 76
3.15 Traffic 77
3.15.1 Affected Environment 77
3.15.2 Environmental Consequences 77
3.16 Safety and Security 78
3.16.1 Affected Environment 78
3.16.2 Environmental Consequences 79
3.17 Cumulative Impacts 79
3.17.1 Environmental Consequences 81

Preliminary Draft for Agency Review

TABLE OF CONTENTS (CONTINUED)

3.18 Comparative Analysis of the No Action and Proposed Action Alternatives 83
3.19 Statement of Environmental Significance of Proposed Action Alternative 86

4.0 MITIGATION 87
4.1 Avoidance and Minimization 87
4.2 Compensatory Mitigation 90

5.0 COORDINATION AND COMPLIANCE 91
5.1 Agency and Tribal Consultation 91
5.2 Permits and Approvals 91
5.3 Compliance with Other Laws and Regulations 92
5.4 Agency Coordination 96
5.5 List of Preparers 97

6.0 REFERENCES 98

LIST OF FIGURES

Figure 1: Project Location and Vicinity 3
Figure 2: BNSF Northern Tier Corridor 5
Figure 3: Regional Rail Network Showing the Sandpoint "Funnel" 6
Figure 4: Simulation of new Bridge 3.9 from the north shoreline of the Pend Oreille River 14
Figure 5: Simulation of new Bridge 3.1 over Sand Creek between US 95 and existing Bridge 3.1 14
Figure 6: Simulation of new Bridge 3.1 over Sand Creek 15
Figure 7: Simulation of new Bridge 3.0 from Bridge Street 15
Figure 8: Construction Staging Areas and Access Points 17
Figure 9: National Wetland Inventory Wetlands and Surface Water 31
Figure 10: Floodplains 38
Figure 11: Sandpoint Junction Connector Action Area 49
Figure 12: Critical Habitat for Bull Trout 53

Preliminary Draft for Agency Review

TABLE OF CONTENTS (CONTINUED)

LIST OF TABLES

Table 1: Alternatives Comparison Summary 9
Table 2: Number of Piles and Installation Detail 18
Table 3: Construction Equipment List, Use, and Reference Maximum In-Air Noise Levels 22
Table 4: General Work Activities Sequencing and Timeline 23
Table 5: Temporary and Permanent Floodplain Fill Volumes 39
Table 6: Bonner County Birds 43
Table 7: Lake Pend Oreille Fish 45
Table 8: USFWS Listed and Proposed Species and Critical Habitat in Bonner County 51
Table 9: Airborne Construction Noise Attenuation 67
Table 10: Comparison of Potential Environmental Effects of Alternatives 84
Table 11: Status of Compliance with Environmental Laws/Regulations 93
Table 12: Agencies and Persons Contacted 96
Table 13: List of Environmental Assessment Preparers 97

LIST OF APPENDICES

Appendix A: Bridge Permit Drawings
Appendix B: Site Photographs
Appendix C: Wetlands and Waters of the U.S. Delineation Report
Appendix D: Waters of the United States Impact Maps
Appendix E: Hydraulic Analysis
Appendix F: Biological Assessment
Appendix G: State Historic Preservation Office Concurrence
Appendix H: Idaho Department of Lands Encroachment Permit
Appendix I: Visual Impact Analysis
Appendix J: Lake Pend Oreille Geographic Response Plan

Preliminary Draft for Agency Review

ABBREVIATIONS AND ACRONYMS

ACHP	Advisory Council on Historic Preservation
APE	Area of Potential Effects
BA	Biological Assessment
BFE	Base Flood Elevation
BMP	best management practice
BNSF	BNSF Railway Company
CAA	Clean Air Act
CFR	Code of Federal Regulations
City	City of Sandpoint
County	unincorporated Bonner County
CWA	Clean Water Act
dB	decibel
dBA	A-weighted decibel
EA	Environmental Assessment
EIS	Environmental Impact Statement
ESA	Endangered Species Act
FEMA	Federal Emergency Management Agency
FHWA	Federal Highway Administration
FMO	foraging, migration, and overwintering
FR	Federal Register
FRA	Federal Railroad Administration
FTA	Federal Transit Administration
GIS	geographic information system
GRP	geographic response plan
IDEQ	Idaho Department of Environmental Quality
IDFG	Idaho Department of Fish and Game
IDL	Idaho Department of Lands
IDP	inadvertent discovery plan
IPaC	Information for Planning and Consultation
ISDA	Idaho State Department of Agriculture
ITD	Idaho Transportation Department
Jacobs	Jacobs Engineering Group Inc.
LEDPA	least environmentally damaging practicable alternative
LPO	Lake Pend Oreille

Preliminary Draft for Agency Review

ABBREVIATIONS AND ACRONYMS (CONTINUED)

MBTA	Migratory Bird Treaty Act
MP	milepost
mph	miles per hour
MRL	Montana Rail Link
NCP	National Contingency Plan
NEPA	National Environmental Policy Act
NFA	No Further Action
NHPA	National Historic Preservation Act
NOAA	National Oceanic and Atmospheric Administration
NPDES	National Pollutant Discharge Elimination System
NRHP	National Register of Historic Places
NWAC	Northwest Area Committee
NWACP	Northwest Area Contingency Plan
OEM	Office of Emergency Management
OHWM	ordinary high water mark
OSHA	Occupational Safety and Health Act
OSRO	oil spill response organization
PAH	polycyclic aromatic hydrocarbon
PM	particulate matter
PM_{10}	particulate matter 10 micrometers or smaller
Project	BNSF Sandpoint Junction Connector Project
PTC	Positive Train Control
RFFA	reasonably foreseeable future action
RHA	Rivers and Harbors Act
ROW	right-of-way
RRT	Regional Response Team
SHPO	State Historic Preservation Office
SPCC	Spill Prevention, Control, and Countermeasure
SWPPP	Stormwater Pollution Prevention Plan
THPO	Tribal Historic Preservation Officer
TMDL	total maximum daily load
UPRR	Union Pacific Railroad
USACE	U.S. Army Corps of Engineers
US 95	U.S. Highway 95
U.S.C.	U.S. Code
USCG	U.S. Coast Guard
USDOT	U.S. Department of Transportation

Preliminary Draft for Agency Review

ABBREVIATIONS AND ACRONYMS (CONTINUED)

USEPA	U.S. Environmental Protection Agency
USFWS	U.S. Fish and Wildlife Service
UST	underground storage tank
VOC	volatile organic compound
WDOE	Washington State Department of Ecology
WQC	Water Quality Certification
WSDOT	Washington State Department of Transportation
WTP	water treatment plant

Preliminary Draft for Agency Review

EXECUTIVE SUMMARY

The BNSF Railway Company (BNSF) has proposed to build new railroad bridges across Lake Pend Oreille (LPO) and Sand Creek in Bonner County, Idaho, as part of a project to add a second main line track along a 2.2-mile segment of existing single main line track between BNSF milepost (MP) 2.9 and MP 5.1. This proposed project is called the Sandpoint Junction Connector (Project). BNSF applied for a bridge permit from the U.S. Coast Guard (USCG) under Section 9 of the Rivers and Harbors Act to construct the bridges over LPO and Sand Creek, which are navigable waters of the United States. BNSF also applied for an individual permit from the U.S. Army Corps of Engineers under Section 404 of the Clean Water Act and Section 10 of the Rivers and Harbors Act (other environmental permits associated with the Project are provided in Section 5.2).

To issue discretionary permits, federal agencies must evaluate the potential impacts of an action on the environment as required under the National Environmental Policy Act (NEPA) of 1969 (42 U.S.C. 4321 et seq.). The USCG, serving as the lead federal agency, in coordination with BNSF and its consultant, Jacobs Engineering Group Inc., has prepared this Environmental Assessment (EA) to examine the potential environmental effects of the Project in compliance with NEPA.

Purpose and Need

The purpose of the Project is to reduce the delay of freight and passenger rail traffic on the BNSF freight rail system between its Algoma main line track south of Sandpoint (BNSF MP 5.1) and the Sandpoint Junction (MP 2.9), where BNSF and the Montana Rail Link main line tracks converge just north of the Sandpoint Amtrak Station.

The Project need is based on the existing infrastructures' ability to handle the continued growth of freight rail service demands in the BNSF northern tier, a high-volume traffic corridor between the Midwest (Chicago Terminus) and the West Coast. BNSF is a federally designated common carrier and by law (49 U.S.C. § 11101) is required to provide transportation service for all goods upon reasonable request. Rail traffic volumes have risen steadily for the past three decades in this portion of the interstate main line as a result of population growth in the United States and the corresponding increase in the demand for freight, a general trend that will likely continue over time. The 2.2-mile segment of single main line track between BNSF MP 2.9 and MP 5.1 has become a constraint to efficient rail movement in the BNSF northern tier. The existing single-track configuration causes trains to back up on the main line, on existing sidings, and in rail yards waiting for an opening to cross the bottleneck. Trains waiting for a crossing opportunity cause long vehicular wait times at public and private at-grade rail crossings. The delay in train and truck traffic results in a delay of the local and regional transport of people, goods, and services.

Based upon the Project needs, BNSF developed the following Project goals to balance social, economic, and environmental factors during the alternatives screening process:

1. Meet BNSF operational needs.
2. Be economically feasible for BNSF to design, construct, operate, and maintain.
3. Be technically feasible for BNSF to design, construct, operate, and maintain.
4. Minimize adverse impacts to the built and natural environment.

Preliminary Draft for Agency Review

Alternatives

Several alternatives were considered and dismissed from further consideration in this EA, including constructing a second main line track east of the existing main line track, developing alternate regional routes or shifting traffic to other railroads, and constructing grade-separated crossings (see Section 2.1). Compared to a new track west of the existing main line track, a new track east of the existing main line track would result in greater aquatic impacts, more disruption to the community and recreational users during construction, and higher construction costs due to increased fill and staging area needs. Developing alternate routes or shifting traffic to other railroads is not viable because BNSF is not guaranteed sufficient rail capacity on other railroads and off-site options would require acquisition of substantial private property. Converting public at-grade crossings to grade-separated crossings throughout North Idaho could reduce vehicular delay, but would not reduce the delay of rail traffic because trains already have the right-of-way through those crossings. As a result, this EA evaluates a No Action Alternative and a Proposed Action Alternative located within the existing BNSF right-of-way. The No Action Alternative does not fulfill the Project purpose and need, but provides a baseline for comparison purposes against the Proposed Action Alternative.

The Proposed Action Alternative meets the Project purpose and need through the provision of a second main line track west of the existing track to connect the 2.2-mile segment of single main line track between MP 2.9 and MP 5.1. Improvements associated with the second track include track, switch, and signal upgrades; a new bridge adjacent to, and immediately west of, the existing rail bridge over LPO (Bridge 3.9); a new bridge adjacent to, and immediately west of, the existing rail bridge over Sand Creek (Bridge 3.1); and a new bridge adjacent to, and immediately west of, the existing rail bridge over Bridge Street (Bridge 3.0). These improvements are expected to relieve system congestion of rail traffic and reduce hold times on sidings and wait times at grade crossings, both locally in Sandpoint and regionally from eastern Washington across northern Idaho to northwest Montana.

Environmental Effects and Mitigation

Chapter 3.0 of this EA analyzes the potential environmental effects of the No Action Alternative and the Proposed Action Alternative by discipline. The Proposed Action Alternative is expected to result in short-term impacts to the built and natural environment during the three- to five-year construction period, as described in Section 2.3.1. Implementation of standard best management practices through a Stormwater Pollution Prevention Plan; Temporary Erosion and Sediment Control Plan; and Spill Prevention, Control, and Countermeasure Plan are proposed to reduce these construction-related impacts.

Construction activities are likely to adversely affect individual adult and subadult bull trout (see Section 3.8). However, the Proposed Action Alternative is unlikely to affect bull trout subpopulation indicators or critical habitat at the watershed or Columbia River Headwaters Recovery Unit scales, either temporarily or permanently.

Construction of the bridges over LPO and Sand Creek would result in 0.88 acre of nearshore fill and 0.28 acre of wetland fill (see Section 3.4). Wetland impacts would be mitigated through the use of an agency-approved mitigation bank, the Valencia Wetland Mitigation Bank/Valencia Wetlands Trust (bank) located in Priest River, Idaho. Mitigation for impacts to nearshore fill and aquatic resources would be determined through a collaborative, consensus-based process guided by a group of federal and state agencies, Tribes, and other LPO and Sand Creek stakeholders (see Section 4.0).

Preliminary Draft for Agency Review

In the long-term, the Proposed Action Alternative would improve local air quality (see Section 3.1) compared to the No Action Alternative by reducing locomotive emissions associated with periods of idling and related "powering up" to resume travel that result from the single-track main line constriction at Sandpoint. The Proposed Action Alternative would also result in a long-term decrease in rail and roadway traffic noise (see Section 3.13) and an improvement in emergency response times (see Section 3.16) due to reduced congestion and delays at at-grade crossings (see Section 3.15) associated with regional rail traffic staging on approach to the Project corridor.

During preparation of the Draft EA and environmental permit applications, several questions and concerns were raised by agencies and members of the public regarding the potential for the Project to increase hazardous materials or coal spill risk and generate fugitive coal dust. Additional information on these topics is provided below.

Spill Risk. Train-related accident risk is a function of ton-miles of freight moved, calculated from the amount of freight moved and the number of rail miles travelled. The construction of a second main line track and associated bridges would not increase the amount of freight moved or the number of rail miles travelled but would result in more efficient and timely transport of freight and passenger rail traffic through this portion of the BNSF interstate main line, reducing the potential for conflicts associated with stopped or idling trains. Therefore, the Proposed Action Alternative would not increase the risk of spills or accidents. BNSF is currently coordinating with federal, state, and local entities in the ongoing review, update, and implementation of the LPO Geographic Response Plan (see Section 3.14), which guides early actions if a hazardous materials spill were to happen in the region. In the event of an accident or spill under the No Action or Proposed Action Alternative, BNSF would respond in accordance with the LPO Geographic Response Plan. Temporary spill risk associated with construction equipment working over the water (see Section 3.14), would be minimized through implementation of construction best management practices (see Section 4.0).

Fugitive Coal Dust. Train-related fugitive coal dust (which includes larger particles) is primarily associated with coal loading and unloading operations. The Proposed Action Alternative would not change loading procedures, change the way coal is transported, or change the volume of coal that is transported by rail. BNSF coal trains on this route are subject to loading requirements at Wyoming or Montana mine origins to address and reduce coal dust emissions, including shaping the coal profile and the application of a dust suppressant with a minimum 85 percent dust reduction rate in fugitive coal dust (see Section 3.1). Since the Project does not propose to transfer, load, unload, dig, pile, or handle coal, no direct coal-related impacts are anticipated, and no mitigation is proposed.

Potential direct and indirect effects to all disciplines are not anticipated to reach a level of significant impact. Neither alternative would contribute significantly to cumulative impacts.

Next Steps

The NEPA process must be complete prior to the issuance of federal permits for the Project. The USCG will prepare a Final EA that considers public and agency comments received on the Draft EA. As the lead federal agency, the USCG will use the Final EA to determine whether the Project could have a significant environmental impact. If the USCG concludes that the Project would not result in significant environmental impact, a "Finding of No Significant Impact" will be issued, completing the NEPA process. If the USCG determines that the Project has the potential to result in significant environmental impacts, an Environmental Impact Statement will be prepared.

Preliminary Draft for Agency Review

1.0 INTRODUCTION

The U.S. Coast Guard (USCG) as the lead federal agency, in coordination with BNSF Railway Company (BNSF) and their consultant Jacobs Engineering Group Inc. (Jacobs), has prepared this environmental document pursuant to the National Environmental Policy Act (NEPA) of 1969 (42 U.S. Code [U.S.C.] 4321 et seq.). This Environmental Assessment (EA) examines the potential environmental effects of the BNSF Sandpoint Junction Connector Project (Project) in accordance with the USCG policy and procedures for implementing NEPA (USCG 2000). This document discusses practical measures to avoid, minimize, or mitigate the identified potential adverse impacts.

NEPA applies to the Project because the Project constitutes a "major federal action" as defined by the Council on Environmental Quality's NEPA regulations (see Sections 1508.18(a) and (b)(4) in Title 40 of the Code of Federal Regulations [40 CFR 1508.18(a) and (b)(4)]), and the Project involves federal permits, including a bridge permit from the USCG under Section 9 of the Rivers and Harbors Act (RHA) of 1899. In addition to the Coast Guard bridge permit, the Project involves the following federal and state permits:

- An individual permit from the U.S. Army Corps of Engineers (USACE) under Section 404 of the Clean Water Act (CWA; 33 U.S.C. 1344) to permanently discharge 11,220 cubic yards of rock into 1.16 acres of water and wetlands and temporarily discharge 3,680 cubic yards of rock into 0.38 acre of water, all associated with construction of the proposed bridges. USACE issued a public notice dated February 26, 2018, announcing that BNSF had applied for a Section 404 permit in response to which approximately 5,000 public comments were received expressing both support and opposition to the proposed Project. Final permit action is pending.
- An Encroachment Permit from Idaho Department of Lands (IDL) in accordance with the Idaho Lake Protection Act. BNSF submitted an application for the Encroachment Permit to IDL in December 2017. IDL subsequently convened two public hearings in Sandpoint, Idaho, on May 23, 2018, to solicit oral and written comment from members of the public. A Final Order approving the application for Encroachment Permit No. L-96-S-0096E was signed June 21, 2018.
- A Section 401 Water Quality Certification (WQC), which was issued by the Idaho Department of Environmental Quality (IDEQ) on September 21, 2018, in accordance with the provisions of Section 401(a)(1) of the Federal Water Pollution Control Act (CWA). The draft certification was circulated for a 45-day public comment period from April 13, 2018, to May 29, 2018, during which time ten comments were received that were incorporated into the final certification.

When a federal agency is uncertain if a proposed project will significantly affect the environment so as to require an Environmental Impact Statement (EIS), the Council on Environmental Quality regulations call for the agency to prepare an EA, which is a preliminary consideration of potential environmental effects that should provide sufficient evidence and analysis to determine whether an EIS is necessary. As part of this evaluation process, the Coast Guard has solicited and received comments from state and federal agencies with expertise in particular resources that may be impacted by the Project and seeks comments from the general public as well. Agencies participating in the environmental review of the proposed Project include the USACE, the U.S. Fish and Wildlife Service (USFWS),

Preliminary Draft for Agency Review

the U.S. Environmental Protection Agency (USEPA), the IDL, and the IDEQ. Additionally, the Coast Guard has considered the public comments received as part of the IDL Encroachment Permit process. The Coast Guard is making its Draft EA available for public review and comment so that it can make an informed decision whether an EIS is required for this Project.

The Coast Guard's principal role regarding BNSF's proposed railroad bridges across Lake Pend Oreille (LPO) and Sand Creek is to ensure the structures do not unreasonably obstruct navigation. Coast Guard regulations in 33 CFR 114.10 state "[t]he several bridge laws referenced in the Authority for part 114, are intended to prevent any interference with navigable waters of the United States whether by bridges, dams, dikes or other obstructions to navigation except by express permission of the United States. The decision as to whether a bridge permit or a drawbridge operation regulation will be issued or promulgated must rest primarily upon the effect of the proposed action on navigation to assure that the action provides for the reasonable needs of navigation after full consideration of the effect of the proposed action on the human environment."

Because the intent of the bridge statutes is to ensure that navigation is not unduly obstructed, the Coast Guard's permit authority is limited to the bridge and its essential components including approaches and abutments. Consequently, the Coast Guard does not have the authority to approve or disapprove broader aspects of a project beyond the bridges themselves. For example, if a sponsor proposes to build a new roadway or rail line and the project includes a bridge, the Coast Guard's permit authority is limited to the bridge and its effect upon navigation. As discussed above, the Coast Guard must also comply with NEPA to evaluate the environmental effects of the issuance of the bridge permit.

1.1 Site Location and Existing Structure

1.1.1 Site Location

The Project site is located within the existing BNSF rights-of-way (ROWs) from approximately milepost (MP) 2.9 to MP 5.1, on Line Segment 45 within the Montana Division, Kootenai River Subdivision. The Project site is located within the incorporated limits of the City of Sandpoint (City) and unincorporated Bonner County (County), Idaho, and encompasses portions of Sections 15, 22, 23, 25, 26, and 36; Township 57 North; Range 2 West, Boise Meridian. Latitudinal and longitudinal coordinates for the approximate Project center are 48°15'54.81"N, 116°32'13.05"W (**Figure 1**). The U.S. Geological Survey Hydrologic Unit Code is 17010214 within the Idaho Panhandle Basin, LPO Subbasin.

Preliminary Draft for Agency Review

Figure 1: Project Location and Vicinity

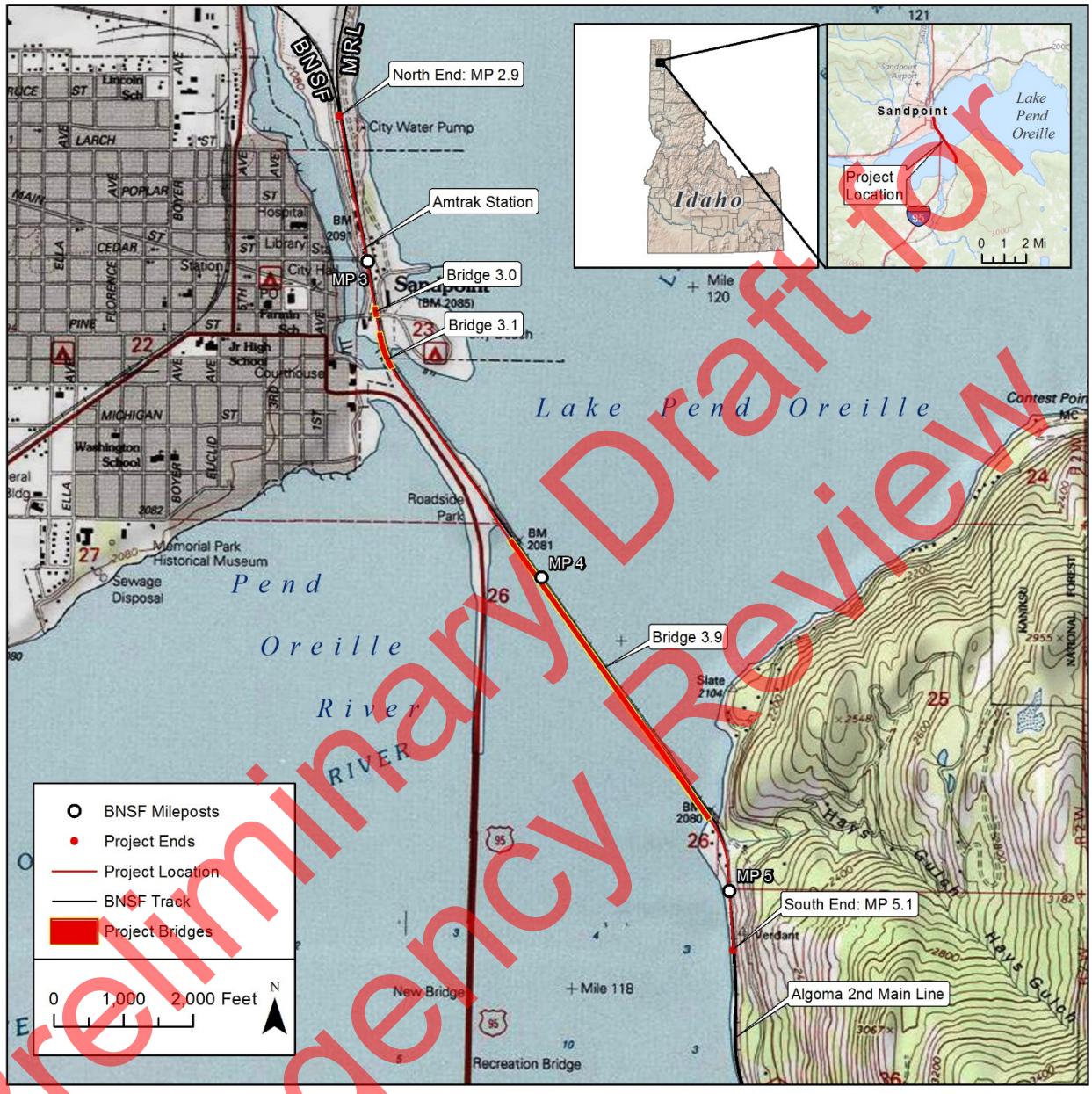

Preliminary Draft for Agency Review

1.1.2 Existing Conditions and Structures

The current track configuration involves a Montana Rail Link (MRL) siding and two main line tracks, BNSF and MRL, meeting at the Sandpoint Junction (BNSF MP 2.9) just north of the Sandpoint Amtrak Station, becoming a single main line track through Sandpoint and over Sand Creek and LPO to the BNSF Algoma (East) main line track (BNSF MP 5.1) where the single main line switches to two main lines. Key features of the Project corridor are described below:

- The north end of the Project (BNSF MP 2.9) is within the City of Sandpoint and is designated as an Urban Transportation Corridor (Bonner County 2017).
- The existing BNSF main line track from BNSF MP 2.9 to 3.9 is surrounded on the west by the BNSF maintenance road, the Sandpoint Amtrak Depot, U.S. Highway 95 (US 95), and Sandpoint Marina and on the east by Sandpoint Avenue, Seasons of Sandpoint Condominiums, Best Western Edgewater Resort, Sandpoint Edgewater RV Park, and a portion of the Sandpoint City Beach Marina.
- BNSF Bridge 3.0 spans Bridge Street in Sandpoint.
- BNSF Bridge 3.1 spans Sand Creek in Sandpoint. The main channel navigational span at Bridge 3.1 has a horizontal clearance of 42 feet and a vertical clearance of 16.2 feet (Jacobs 2018d).
- BNSF Bridge 3.9 spans the open water of LPO from MP 3.9–4.9. The navigational spans at Bridge 3.9 have vertical clearances ranging from 12.5 feet to 16.5 feet and horizontal clearances ranging from 7 feet to 89.6 feet (Jacobs 2018a).
- The south end of the Project (BNSF MP 5.1) is designated as a Rural-Residential Transportation Corridor (Bonner County 2017).

The existing BNSF Bridge 3.1 is a fixed, single-track bridge measuring 155 feet long and 19 feet wide with four concrete piers, two of which are abutments. It was originally constructed in 1902 but was modified in 1990 with replacement of the superstructure, concrete pier caps, deck, and walk.

The existing BNSF Bridge 3.9 is a fixed bridge that has both open- and ballast-deck spans measuring 4,769 feet long with 88 piers. Thirty-two of the original over 100-year-old, single-column concrete piers on wood pilings (16 on the north end and 16 on the south end of the bridge) were replaced between 2006 to 2009 with steel bents, each composed of 6 closed-end steel pipe piles. The existing bridge also has a nonoperable swing span over the two, published 76.6-foot-wide navigation channels.

Appendix A includes a set of permit drawings showing the primary components of the existing bridges and trackwork along the Project work corridor.

Preliminary Draft for Agency Review

1.2 Purpose and Need

1.2.1 Background

The BNSF northern tier is a high-volume traffic corridor that connects both the Midwest Chicago Terminus and Canada to the West Coast ports of Seattle, Tacoma, and Portland (**Figure 2**), making it a critical transportation link in the national transport and international delivery of products. As a federally designated common carrier, BNSF has a legal obligation to provide transportation services for all regulated goods upon reasonable request. This rail corridor moves all types of traffic, including consumer goods; grain; lumber; and energy products such as crude oil, wind turbines, and coal. In 2017, 70 percent of the BNSF trains that moved through Sandpoint carried agricultural goods, consumer goods, or mixed freight. This corridor also serves as Amtrak's only route across the northern United States (the "Empire Builder"), connecting the Midwest (Chicago) with the West Coast, making it an important piece of the interstate, long-distance passenger rail system.

Rail traffic volumes have risen steadily for the past three decades on this portion of the interstate main line, increasing the economic significance of the corridor. Currently, approximately 60 trains use this section of track per day, resulting in nearly 22,000 overwater crossings per year.

Figure 2: BNSF Northern Tier Corridor

1.2.2 Problem Definition

Two main line track sections end at Sandpoint Junction (BNSF MP 2.9) and Algoma (BNSF MP 5.1). These two main line track sections are separated by a 2.2-mile section with only one main line track over Sand Creek and LPO, which dates from the early 1900s (**Figure 1**). Sandpoint Junction is located at the north end of the single-track section, just north of the Sandpoint Amtrak Station, where an MRL siding track meets two main line tracks (BNSF and MRL). A Union Pacific Railroad (UPRR) track crosses the BNSF main line track just west of Highway 2. At the south end of the single-track section, the main line converges with the BNSF Algoma (East) main line track.

The 2.2-mile segment of single main line track through Sandpoint is a constraint to efficient rail movement due to its configuration and location at the convergence of multiple rail lines (**Figure 3**). The single-track configuration causes trains to back up on the main line, on existing sidings, and in rail yards waiting for an opening to cross the Project corridor . BNSF and MRL freight trains are required to give priority to Amtrak passenger rail trains, which further delays freight delivery. A delay in freight rail trains can cause delayed or missed connections at ports and intermodal stations, which can compromise the successful delivery of goods and services for purposes of interstate commerce.

Preliminary Draft for Agency Review

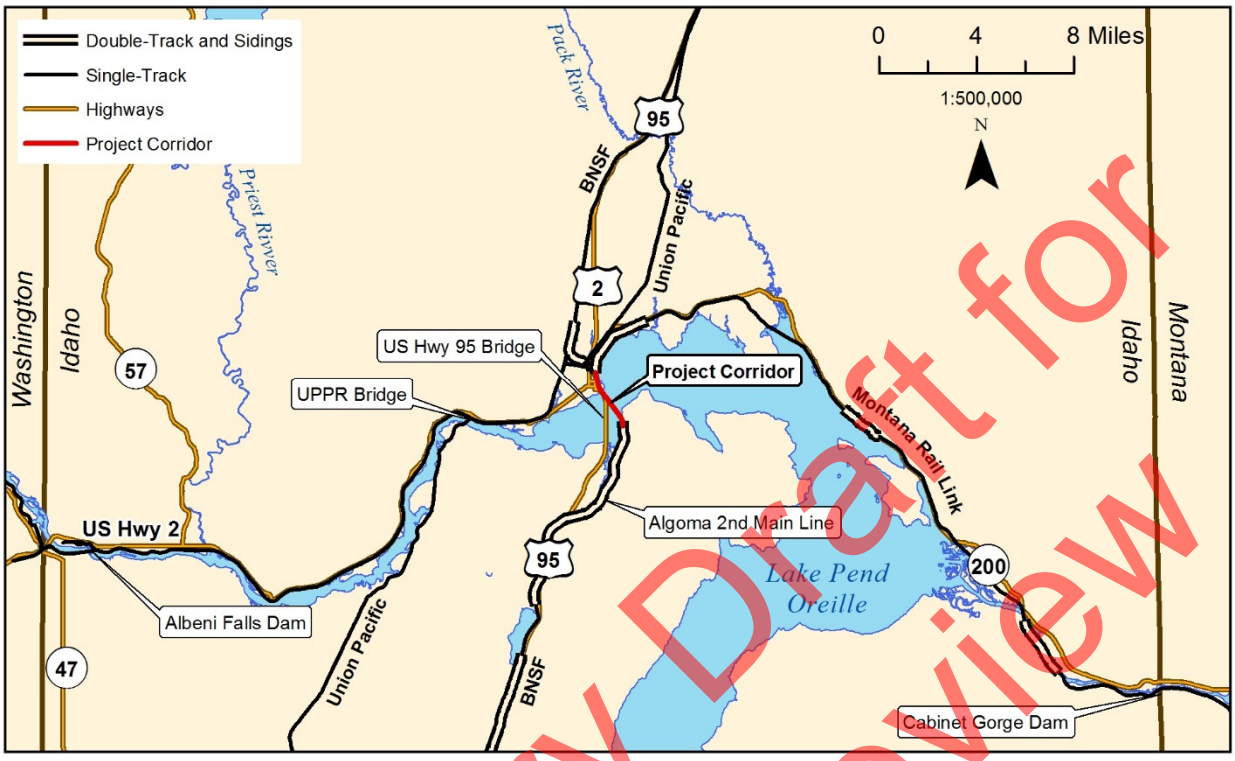

Figure 3: Regional Rail Network Showing the Sandpoint "Funnel"

While waiting for an opportunity to cross Sand Creek and LPO through the Project corridor, trains that extend up to two miles in length cause long vehicular wait times at at-grade rail crossings of private driveways and local County and City streets. Increased vehicle wait times can occur at approximately 24 public at-grade crossings located on the BNSF main line within 20 miles of Sandpoint Junction. Many more at-grade crossings are located on the MRL and UPRR railroad lines. This results in congestion in Sandpoint and the surrounding communities, which causes a delay of the local and regional transport of people, goods, and services from eastern Washington across northern Idaho to northwest Montana.

Rail transportation in this corridor has increased as a result of population growth in the U.S. and the corresponding increase in the demand for freight-by-rail transport and will likely continue this trend. The existing bridges over Sand Creek and LPO have the physical capacity to move more trains, but additional train volumes would increase congestion and delays, negatively impacting North Idaho communities and communities throughout the BNSF network. If the constriction at this location is not addressed, the delay is expected to increase, resulting in a lower level of service for both rail and vehicle traffic and further constraining the movement of goods and services at local, regional, national, and international levels.

Deteriorating rail service may also cause shippers with alternative options, such as consumer product containers, to convert to highway transportation by truck. One double-stack intermodal train carries the same cargo as 280 trucks that would be diverted to publicly funded highways, producing negative highway congestion and environmental and safety impacts.

Preliminary Draft for Agency Review

1.2.3 Project Purpose

The purpose of the Project is to reduce the delay of freight and passenger rail traffic on the BNSF freight rail system between its Algoma main line track south of Sandpoint (BNSF MP 5.1) and the Sandpoint Junction (MP 2.9), where BNSF and the MRL main line tracks converge just north of the Sandpoint Amtrak Station. Based upon the needs identified above, BNSF developed the following goals and supporting objectives for the Project to balance social, economic, and environmental factors.

Goal 1. Meet BNSF operational needs.

- Objective 1-1: Reduce the delay of freight and passenger rail traffic.
- Objective 1-2: Accommodate increased demand for freight rail services.

Goal 2. Be economically feasible for BNSF to design, construct, operate, and maintain.

- Objective 2-1: Deliver the Project at a reasonable cost to BNSF and its customers.
- Objective 2-2: Be a viable business option by utilizing infrastructure on property and facilities owned by BNSF.

Goal 3. Be technically feasible for BNSF to design, construct, operate, and maintain.

- Objective 3-1: Accommodate construction within existing BNSF ROW.
- Objective 3-2: Minimize construction complexity.

Goal 4. Minimize adverse impacts to the built and natural environment.

- Objective 4-1: Minimize impacts to waters of the United States.
- Objective 4-2: Reduce vehicular delay at at-grade crossings.
- Objective 4-3: Reduce passenger rail delay.
- Objective 4-4: Avoid acquisition of permanent ROW.
- Objective 4-5: Minimize disturbance to the local community during construction.

Alternatives that propose construction of a bridge over navigable waters such as Sand Creek or LPO will require a bridge permit from the USCG under Section 9 of the RHA. Alternatives that propose discharge into waters of the United States or construction of a structure or other work in navigable waters will require a permit from the USACE under Section 404 of the CWA and/or Section 10 of the RHA.

Preliminary Draft for Agency Review

2.0 ALTERNATIVES

The following reasonable alternatives to address the purpose and need for the Project were considered by the Project team:

- Maintain single main line track (No Action – Analyzed Alternative 1)
- New track east of the existing main line track (Proposed Action – Analyzed Alternative 2)
- New track east of the existing main line track (Eliminated Alternative)
- Off-site/outside existing BNSF ROW (Eliminated Alternative)
- Grade-separated crossings (Eliminated Alternative)

BNSF coordinated with the USCG and the USACE to identify these alternatives and evaluated them using goals and objectives identified in Section 1.2.3.

During the CWA Section 404 permit evaluation, the USACE must identify the least environmentally damaging practicable alternative (LEDPA), in compliance with Section 404(b)(1) of the CWA. The basic premise of the 404 program is that no discharge of dredged or fill material may be permitted if (1) a practicable alternative exists that is less damaging to the aquatic environment or (2) the nation's waters would be considerably degraded. This premise is reflected in the 404(b)(1) guidelines in 40 CFR Part 230, which states that discharges of dredged or fill material into waters of the United States, including wetlands, should not occur unless it can be demonstrated that such discharges, either individually or cumulatively, will not result in unacceptable adverse effects on the aquatic ecosystem. In addition, 40 CFR 230.10(a) specifically states, "No discharge of dredged or fill material shall be permitted if there is a practicable alternative to the proposed discharge which would have less adverse impact on the aquatic ecosystem, so long as the alternative does not have other significant adverse environmental consequences." An alternative is practicable if it is available and capable of being conducted after considering cost, existing technology, and logistics in light of overall project purposes. The identification of the LEDPA is based on the alternatives analysis (Jacobs 2018c) submitted to the USACE as part of the CWA Section 404 permit application, in addition to the alternatives analysis conducted during EA preparation.

Alternatives considered and eliminated from further consideration are discussed in Section 2.1. Alternatives carried forward for further analysis in this EA are discussed in Sections 2.2 and 2.3.

2.1 Alternatives Eliminated from Further Consideration

The following alternatives were considered but eliminated because they do not meet the goals and objectives identified in Section 1.2.3:

- New track east of the existing main line track
- Off-site/outside existing BNSF ROW
- Grade-separated crossings

The rationale for elimination of each alternative is summarized in the following subsections. **Table 1** provides a comparison of the eliminated alternatives to the No Action Alternative and the Proposed Action Alternative.

Preliminary Draft for Agency Review

Table 1: Alternatives Comparison Summary

		Analyzed Alternatives		Eliminated Alternatives		
Goal	**Objective**	**No Action**	**New Track West of Existing Main Line (Proposed)**	**New Track East of Existing Main Line**	**Off-Site/Outside Existing Right-of-Way**	**Grade-Separated Crossings**
1. Meet Operational Needs	1-1. Reduces freight rail delay (Y/N)	No	Yes	Yes	Yes	No
	1-2. Accommodate increased demand for rail services (Y/N)	No	Yes	Yes	Yes	No
2. Economic Feasibility	2-1. Construction cost (millions of dollars)[1]	$0	$100[2]	$120[2]	>$192[3]	$132[4]
	2-2. Utilizes infrastructure on property and facilities owned by BNSF (Y/N)	Yes	Yes	Yes	No	Yes
3. Technical Feasibility	3-1. Construction would occur within existing BNSF ROW (Y/N)	Yes	Yes	No	No	No
	3-2. Construction complexity (High/Moderate/Low)	Low	Moderate	High	High	Moderate
4. Minimize Adverse Impacts to the Built and Natural Environment	4-1. Impact to waters of the United States (acres)[6]	0 acre	1.54 acres[5]	5.36 to 7.36 acres	13 to 18 acres	Unknown
	4-2. Reduces vehicular delay at at-grade crossings (Y/N)	No	Yes	Yes	Yes	Yes
	4-3. Reduces passenger rail delay (Y/N)	No	Yes	Yes	Yes	No
	4-4. Permanent ROW acquisition (acres)	0	0	0	770	Unknown
	4-5. Construction disturbance to local community (high/moderate/low)	Low	Moderate	High	High	Low

Notes:
[1]Excludes maintenance activities, right-of-way (ROW) acquisition, mitigation, and costs external to BNSF.
[2]Approximate cost based on conceptual engineering for a new track west of the existing main line. Additional costs associated with a new track east of the existing main line are included to account for additional in-water fill/slope armoring, rock blasting, retaining walls, and impacts to utilities and properties.
[3]Estimated cost assuming construction of approximately 32 miles of new double main line track along existing Union Pacific Railroad's alignment at $6 million per mile on average.
[4]Estimated cost assuming construction of 24 grade-separated crossings within 20 miles of Sandpoint Junction at $5.5 million per crossing.
[5]A design option that extends the north end of Bridge 3.9 by 350 linear feet to eliminate nearshore fills to that area was considered by the Project team but rejected due to cost and safety and security concerns (Jacobs 2018c).
[6]Data sources: Jacobs 2018b; U.S. Fish and Wildlife Service 2018b; U.S. Department of Transportation 2018.

Preliminary Draft for Agency Review

2.1.1 New Track East of the Existing Main Line Track

This alternative would have essentially all the same work elements described under the Proposed Action Alternative (Section 2.3) but places the new tracks on the east side of the existing main line. Track, switch, and signal upgrades would remain generally the same as the Proposed Action Alternative. A new track east of the existing main line track does not meet the goals and objectives identified in Section 1.2.3 for the following reasons:

- **Technical Feasibility**. Construction of a new main line track east of the existing BNSF main line track would be highly complex. There are no feasible access points from public roads or BNSF maintenance roads to access the area on the north side of LPO east of the existing rail bridge (Bridge 3.9). Cranes necessary to construct the bridge foundations would need to be brought in by barge from LPO and require a large fill area for barge landing, crane assembly, and staging. Pilings and bridge decks would also need to be barged to the site and require landing and staging areas. Other large equipment would need to access the site from Bridge Street.
- **Impacts to the Built and Natural Environment**. Constructing a new bridge over LPO east of the existing rail bridge (Bridge 3.9) would require substantially more nearshore fills than what is required for the Proposed Action Alternative. Approximately 0.5 mile of rail grade was already constructed at the time of the US 95 Sandpoint Bypass Project on the west side of the existing tracks. Providing an equivalent area on the east side of the existing tracks would require approximately 2.9 acres of nearshore fill from Bridge 3.1 (Sand Creek) to Bridge 3.9 (LPO). An estimated 1.2 acres of additional nearshore fill would also be needed for an adequate staging area. A large barge landing area for staging access, would result in both lake-bottom dredging and adjacent fill of up to 2 acres.

  A new bridge over Sand Creek east of the existing rail bridge (Bridge 3.1) would have approximately the same nearshore fills as the Proposed Action Alternative and 0.28-acre less fill to the wetlands just southwest of the bridge. Additional staging for a new bridge over Sand Creek would be required where the Sandpoint Marina encroaches on BNSF ROW, with a subsequent loss of boat slips and access.

  No private land is available to lease or purchase for the staging, assembly, and landing areas. All Project elements would need to be built in regulated areas adjacent to a high-use, public, recreational boating corridor where Sand Creek enters LPO. Large equipment accessing the site from Bridge Street would likely have a measurable increase in traffic congestion in the Bridge Street corridor.

  A new bridge over Bridge Street would be approximately the same as described with the Proposed Action Alternative. However, a track east of the existing main line may not be feasible without compromising access and parking to public and private properties east of existing Bridge 3.0.

A new track east of the existing main line track would cost $20 million more to construct than the Proposed Action Alternative due to the need for substantial rock blasting, increased fill in LPO, retaining wall requirements, and staging area needs. It would substantially increase temporary and permanent impacts to waters of the United States and would result in greater social impact due to increased disruption to the community and recreational users. Therefore, this alternative was eliminated from further consideration in this EA.

Preliminary Draft for Agency Review

2.1.2 Off-Site/Outside Existing BNSF Right-of-Way

This alternative includes developing alternate routes or shifting BNSF traffic to tracks owned by other railroads. Shifting large rail traffic volume to another railroad assumes that another local competing railroad, in particular UPRR, is interested in allowing BNSF trains to utilize its corridor. To preserve UPRR's current and future operations, a new main line track would be needed adjacent to the existing UPRR main line. This may require construction of approximately 32 miles of new main line track along the existing UPRR main line, between a point north of Sandpoint, where the BNSF and UPRR main lines run closely together, to a close running point near Athol, Idaho, where another separate connection between the two competing railroads could be created. This option does not meet the goals and objectives identified in Section 1.2.3 for the following reasons:

- **Economic Feasibility**. When possible, BNSF chooses those options that utilize infrastructure on property and facilities owned by BNSF. BNSF is not guaranteed sufficient rail capacity on the UPRR line. At an estimated average cost of $6 million per rail mile, the cost of constructing 32 miles of new main line track adjacent to the UPRR main line would be nearly twice the cost of constructing a new main line track adjacent to the existing BNSF main line. After factoring in the additional cost of purchasing real estate and negotiating an agreement with another railroad, the total cost becomes economically impractical and would impose an unreasonable cost on rail customers. For these reasons, shifting rail traffic to another railroad is not a viable business option and is considered economically infeasible.
- **Impacts to the Built and Natural Environment**. Developing up to 32 miles of new main line track along the existing UPRR main line would require a substantial amount of property (as much as 770 acres), resulting in social and environmental impacts that far exceed those of the Proposed Action Alternative. Based upon a 100-foot ROW containing 53 acres of jurisdictional waters, aquatic impacts are estimated between 13 and 18 acres (representing 25 to 33 percent of waters of the United States within the ROW).

Developing an alternate route would consist of property acquisition to accommodate a new 100-foot ROW to meet up with the existing track configuration. Although this option meets operational needs, it does not meet the goals and objectives identified in Section 1.2.3 for the following reasons:

- **Economic Feasibility**. The cost to construct an entirely new route would far exceed the cost of an alternative that utilizes an existing rail corridor and is considered economically infeasible.
- **Technical Feasibility**. Large tracts of property to build new tracks outside the BNSF transportation corridor are not available. Available property is further constrained by track grade requirements, which cannot exceed 0.5 percent.
- **Impacts to the Built and Natural Environment**. Developing a new ROW for an alternate route would require acquisition of a substantial amount of private property. A crossing of the Pend Oreille River and several other waterways would be required and would be outside an existing transportation corridor, presumably resulting in even more than the 13 to 18 acres of aquatic impacts estimated above for shifting traffic to the UPRR main line.

For these reasons, an alternative off-site/outside of existing BNSF ROW is considered impractical and was eliminated from further consideration in this EA.

Preliminary Draft for Agency Review

2.1.3 Grade-Separated Crossings

In response to public input, BNSF considered an alternative for additional grade-separated crossings in North Idaho in lieu of constructing additional bridges and main line track. The determination to grade separate a crossing is made by the appropriate road authority using their own calculations or other driving factors. BNSF participates in the process by conducting reviews of construction plans that would impact BNSF's ROW. Under federal law (23 CFR 646.212), there is a formula for cost-sharing between a community and the railroad for providing a grade-separated crossing when the grade separation results in the elimination of an at-grade crossing. BNSF regularly participates in such projects across its system. As such, the viability of this alternative depends on multiple road authorities in North Idaho (approximately 24 public at-grade crossings are located within 20 miles of the Sandpoint Junction) determining that grade-separated crossings would provide a transportation benefit to their community, relative to the cost.

- **Operational Needs**. This alternative was eliminated from further consideration because it does not meet BNSF's operational needs (Goal 1, see Section 1.2.3). Trains currently have the right of way through existing at-grade crossings, which can result in vehicle delay for local traffic. Converting public at-grade crossings to grade-separated crossings would reduce vehicle delay but would not reduce the delay of freight and passenger rail traffic, which is the primary purpose of the Project.

Therefore, this alternative is not considered further in this EA. Because this alternative does not meet the primary purpose of the Project, it was not analyzed in the same level of detail as other alternatives during the screening process, as noted in **Table 1**. A footprint for this alternative was not estimated, and therefore potential impacts to waters of the United States and potential ROW needs were not quantified.

2.2 Analyzed Alternative 1 – No Action Alternative

Under the No Action Alternative, the current track configuration would stay the same (two main line tracks that switch to a single main line track through Sandpoint and over the Sand Creek and LPO bridges). This includes continued, ongoing inspection and maintenance of the single track, bridges, and associated infrastructure in compliance with the 1995 Interstate Commerce Commission Termination Act and the 1970 Federal Railroad Safety Act.

The No Action Alternative is projected to result in continued and increased levels of trains waiting on the main line, on existing sidings, and in rail yards, with associated continued and increased idling emissions and noise at locations where trains wait for clearance as well as increased time to clear trains from local and regional at-grade crossings. Rail traffic in this corridor has increased as a result of population growth and the corresponding increase in the demand for freight will likely continue this trend. As additional trains are delayed and commerce does not meet expected transportation goals, freight train use could decline and truck and other road traffic could increase.

The No Action Alternative does not meet the purpose or need of the Project and does not address specific conditions that currently result in delays to passenger and freight service or delays of traffic at local and regional road crossings. However, the No Action Alternative will be carried forward for analysis as a comparison tool.

Preliminary Draft for Agency Review

2.3 Analyzed Alternative 2 – Proposed Action Alternative

The Proposed Action Alternative involves the construction of an approximately 2.2-mile-long second main line track west of the existing BNSF main line to connect the Algoma main line track (MP 5.1) south of Sandpoint, to the Sandpoint Junction switch (MP 2.9), where the BNSF and the MRL main lines converge in Sandpoint. This action consists of the following:

- A new main line track west of the existing BNSF main line track
- A new bridge over LPO (Bridge. 3.9) adjacent to (west of) the existing rail bridge (**Figure 4**)
- A new bridge over Sand Creek (Bridge 3.1) adjacent to (west of) the existing rail bridge (**Figures 5 and 6**)
- A new bridge over Bridge Street (Bridge 3.0) adjacent to (west of) the existing rail bridge (**Figure 7**)
- Track, switch, and signal upgrades
- Temporary construction bridges over LPO and Sand Creek
- Development of construction material/equipment work staging areas
- 0.88 acre of permanent and 0.38 acre of temporary nearshore fill below the jurisdictional ordinary high water mark (OHWM) elevation of 2,062.50 feet, associated with bridge abutments and the south switch
- 0.28 acre of wetland fill in one location between the rail grade and the multiuse public pathway south of Bridge 3.1

Similar to the No Action Alternative, the Proposed Action Alternative includes continued, ongoing inspection and maintenance of the main line track, bridges, and associated infrastructure in compliance with federal railroad regulations.

Appendix A includes a set of permit drawings with design details of the Proposed Action Alternative. The existing BNSF bridges over LPO, Sand Creek, and Bridge Street would remain unchanged, except for routine maintenance and repair activities.

Preliminary Draft for Agency Review

Figure 4: Simulation of new Bridge 3.9 from the north shoreline of the Pend Oreille River

Figure 5: Simulation of new Bridge 3.1 over Sand Creek between US 95 and existing Bridge 3.1

Preliminary Draft for Agency Review

Figure 6: Simulation of new Bridge 3.1 over Sand Creek

Figure 7: Simulation of new Bridge 3.0 from Bridge Street

Preliminary Draft for Agency Review

2.3.1 Construction Process

The construction process includes all assumed Project activities: mobilizing equipment and materials needed for construction, reestablishing and improving existing access roads at the north and south ends of the Project corridor, improving staging areas within the existing BNSF ROW, constructing temporary work bridges, constructing new permanent bridges, removing temporary work bridges, restoring site conditions, and demobilizing equipment. Potential construction staging areas and access points are shown on **Figure 8**. The anticipated construction process is summarized as follows:

1. Mobilization. Equipment and materials mobilization to staging areas would be an ongoing process during construction. All staging areas are within BNSF ROW.
2. Site Preparation. Site preparation includes clearing and grubbing activities, removing existing fencing, installing temporary construction fencing, and installing temporary erosion control measures. Site preparation also includes improving existing access roads and staging areas in the existing BNSF ROW. The improvements may include repaving, such work necessary to improve safety (e.g., line of sight clearing), and environmental protection measures such as sediment tracking and containment. For the most part, these areas have already been cleared and overlaid with compacted gravels. Site access would be from US 95 and Bridge Street at the north end of the Project and from Bottle Bay Road at the south end.
3. Construct temporary work bridges over LPO and Sand Creek (**Table 2**). It is assumed for purposes of this analysis that two temporary work bridges would be used to facilitate construction of the new permanent bridges, resulting in 0.38 acre of temporary nearshore fill placement. However, the construction contractor may select different means and methods to construct the new permanent bridges that are less impactful than what is described in this EA.
    a. Temporary work bridge over LPO. A temporary timber deck construction bridge would be built adjacent to and west of the new LPO bridge location. The temporary work bridge over LPO would measure approximately 4,800 feet long and 32 feet wide, with one hundred and one approximately 48-foot-long spans and one 24-foot-long span at the north end. Additionally, eight 64-foot-wide staging setouts would be installed at approximately 500-foot intervals along the bridge for safety and material staging and to provide continuous through-access for the length of the temporary work bridge. The temporary work bridge would support large cranes that would construct the new permanent LPO bridge. The bridge would maintain a 42-foot horizontal and 15-foot vertical clearance at the location of the lighted navigation channel under the existing bridge.

    The temporary work bridge piles would be vibrated to refusal, meaning that the pile is no longer penetrating substrates with vibratory pile-driving methods. Then one pile per pier would be proofed with an impact hammer at an estimated 20 to 50 strikes for a short duration. In water deeper than 3 feet, bubble curtains will be utilized during impact pile driving to attenuate in-water sound. The work bridge would require seven hundred 24-inch-diameter steel pipe piles, with 600 of those being installed in water.

Preliminary Draft for Agency Review

Figure 8: Construction Staging Areas and Access Points

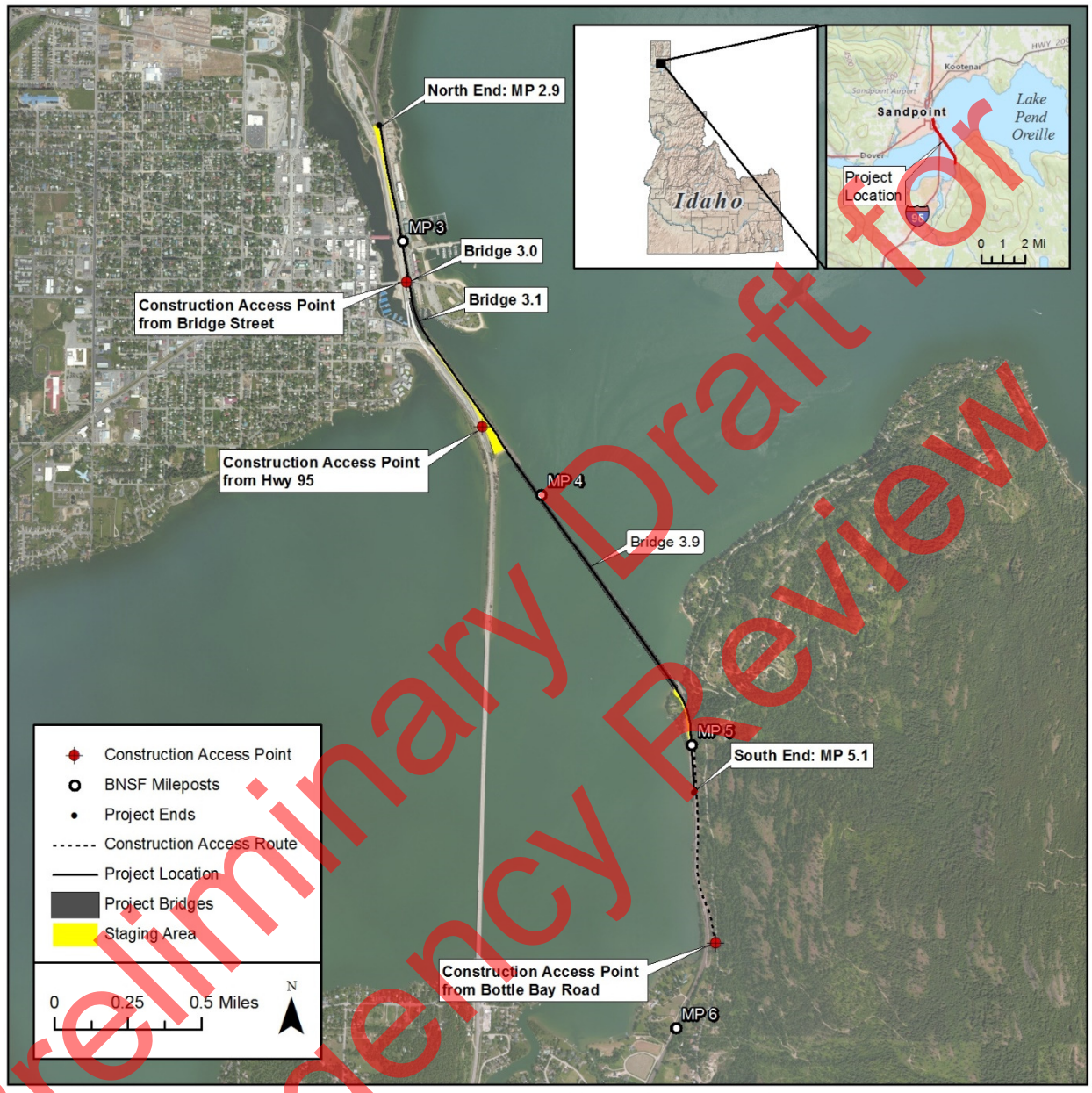

Preliminary Draft for Agency Review

Table 2: Number of Piles and Installation Detail

Action	Support Type	Installation Method	Total Quantity	In-Water Quantity
Temporary Work Bridges				
Sand Creek Install and remove temporary work bridge piles.	24-inch Steel Pipe Pile	Install: Vibratory to refusal and impact hammer for proofing, estimated 20 to 50 strikes per pile. Removal would be vibratory extraction.	48	Up to 40
LPO Install and remove temporary work bridge piles.	24-inch Steel Pipe Pile	Install: Vibratory to refusal and impact hammer for proofing, estimated 20 to 50 strikes per pile. Removal would be vibratory extraction.	700	600
Install and remove temporary platforms on west side of bridges (staging setouts).	24-inch Steel Pipe Pile	Install: Vibratory to refusal and impact hammer for proofing, estimated 20 to 50 strikes per pile. Removal would be vibratory extraction.	Included in overall temporary bridge pile quantities	Included in overall temporary bridge pile quantities
New Bridges				
Bridge 3.1 Install bridge piles.	24-inch Steel Pipe Pile	Install: Vibratory to resistance and finish with an impact hammer, estimated 1,200 strikes per pile.	64	22
Bridge 3.9 Install bridge piles.	36-inch Steel Pipe Pile	Install: Vibratory to resistance and finish with an impact hammer, estimated 1,600 strikes per pile.	288	288
TOTAL			**1,100**	**950**

Notes:
Vibratory to refusal means the pile is no longer penetrating substrates with vibratory pile-driving methods.
Vibratory to resistance means the pile has hit restrictive forces and continued penetration is very slow.

Impact and vibratory pile driving would occur during daylight working hours. Assuming two temporary work bridge piles can be driven per day, pile driving is expected to occur for an estimated one calendar year for the temporary work bridge over LPO, dependent on weather or other interruptions.

The vertical clearance of the temporary work bridge over LPO would gradually rise from the abutments. Spans 1 through 16 at the north end of the bridge would have less than 10 feet of vertical clearance, with the low chord gradually rising from 10 to 15 feet for Spans 17 through 67. Spans 68 through 71 would provide 15 feet of vertical clearance, with the low chord gradually lowering back down from 15 feet to 10 feet at the south end for Spans 72 through 101.

The temporary work bridge over LPO would be constructed first and would remain in place until the new permanent bridge is placed into service. The temporary work bridge went through many design iterations to identify the least impacts to navigation while providing a safe working platform for the large, heavy equipment required to construct the new LPO railroad bridge. Most of the work bridge would retain an equivalent vertical and horizontal clearance as the existing railroad bridge during construction (see existing clearances in Section 1.1.2). The proposed clearances will be reviewed by the USCG as part of the USCG bridge permit process.

Preliminary Draft for Agency Review

All marine traffic that now passes below the existing bridge would be able to pass under the temporary work bridge throughout construction. Signage, lighting, and other notices would be in place to direct marine traffic on LPO away from restrictive spans to the safe, nonrestrictive boating passage spans.

b. Temporary work bridge over Sand Creek. A temporary timber deck construction bridge would be built adjacent to and west of the new Sand Creek bridge location.

The temporary work bridge over Sand Creek would measure approximately 528 feet long and 32 feet wide with eleven 48-foot-long spans. The temporary work bridge over Sand Creek would be supported by 10 piers partially or fully below the OHWM. Eight piers would consist of four 24-inch-diameter, open-ended steel pipe piles, and two piers would consist of eight 24-inch-diameter, open-ended steel pipe piles. In total, 30 to 40 piles would be below the OHWM to account for minor adjustments in span support needs and site conditions. The temporary work bridge would support large cranes that would be working to construct the new permanent Sand Creek bridge.

The temporary work bridge piles would be vibrated to refusal, and one pile per pier would be proofed with an impact hammer at an estimated 20 to 50 strikes for a short duration. In water deeper than 3 feet, bubble curtains will be utilized during impact pile driving to attenuate in-water sound. Impact and vibratory pile driving would occur during daylight working hours. Assuming that two temporary work bridge piles can be driven per day, pile driving is expected to occur for about a month for the temporary work bridge over Sand Creek, depending on weather or other interruptions.

The temporary work bridge span over the Sand Creek marked and lighted navigation channel would be limited to the period when no navigational access up Sand Creek is available, from approximately October 15 to April 15, depending on Albeni Falls Dam fall drawdown and spring fill. The temporary work bridge span over the marked and lighted navigation channel for Sand Creek would be removed between April 15 and October 15. As a result, the temporary work bridge would not impact navigation for marine traffic in Sand Creek as it would not be an obstruction when navigational access up Sand Creek is available.

4. Construct new permanent bridges over LPO and Sand Creek (**Table 2**). Construction of the new permanent bridges may occur concurrently with the construction of the temporary work bridges. This work includes pile driving; setting concrete pier caps and abutments, including excavation for foundations at each abutment; setting the new bridge girders; installing decking, drainage, and handrails; and final grading.

The new permanent LPO bridge would be constructed approximately 50 feet west of the existing rail bridge in existing BNSF ROW and measure approximately 4,874 feet long by 18 feet wide. The new bridge would have 49 spans at the following lengths: forty-two at 104 feet long; six at 75 feet 11 inches long; and one at 47 feet 10 inches long.

Each pier bent would consist of six 36-inch-diameter steel pipe piles for a total of 288 piles below the regulated summer pool elevation of 2,062.5 feet that makes up the jurisdictional OHWM of the lake. The new piers would align approximately with every other pier of the existing bridge.

The vertical clearances of the new permanent LPO bridge would match the 12.5-foot vertical clearance for most of the existing bridge spans. The maximum vertical clearance (low chord) of the new bridge would be 15 feet above the regulated summer pool elevation

Preliminary Draft for Agency Review

of 2,062.5 feet. Six spans of the new bridge (Spans 32-34 and 39-41) would provide a 15-foot vertical clearance. Spans 35 through 38 would have a vertical clearance of 14 feet. The new bridge provides twice the horizontal clearances of the existing Bridge 3.9 for most of the new structure. The navigational span would generally match the horizontal clearance of the existing bridge spans. The vertical and horizontal clearances of the new permanent LPO bridge will be reviewed by the USCG as part of the USCG bridge permit process.

The new permanent LPO bridge would require vibrating 288 piles to resistance into the lake bed, meaning the pile has hit restrictive forces, and continued penetration is very slow. Then the pile will be finished with an impact hammer with an average of 1,600 strikes per pile. All piles would be installed in-water. Pile driving would occur during daylight working hours. Although up to four piles would likely be driven per day, for scheduling purposes it is assumed that up to two piles would be driven per day for an estimated six months, dependent on weather-related or other interruptions.

Air bubble curtains would be used during impact pile driving to attenuate in-water sound pressure levels (when water is more than 3 feet deep) per USFWS protocol. A turbidity curtain would surround the area where bubble curtains would be utilized.

The new permanent Sand Creek bridge would be constructed approximately 35 feet west of the existing rail bridge in existing BNSF ROW and would measure approximately 505 feet long by 21 feet wide. The new bridge would be supported by 11 piers, each consisting of open-ended, 24-inch-diameter steel pipe piles. Two piers within the OHWM of the creek channel would consist of eight piles each; seven piers (one partially or wholly within the OHWM and six fully upland) would consist of six piles each; and two piers upland of the OHWM would consist of three piles each. A total of 64 piles would be placed—22 below the OHWM. Piles within the main channel of Sand Creek would be driven during low-water conditions/winter pool elevation.

Two piers would be fully within the Sand Creek navigational channel. The new bridge navigational horizontal clearance is 74 feet; the existing bridge has an approximately 45-foot horizontal clearance. Vertical clearance of the new bridge would match the vertical clearance of the existing bridge, which is 17 feet above the 2,062.5-foot OHWM elevation. USCG will review the vertical and horizontal clearances of the new permanent Sand Creek bridge as part of the USCG bridge permit process. The new permanent Sand Creek bridge piles would be vibrated to resistance into the creek bed and finished with an impact hammer with an average of 1,200 strikes per pile. Pile driving would occur during daylight working hours. Although up to four piles would likely be driven per day, for scheduling purposes it is assumed that two piles would be driven per day for about one month, dependent on weather-related or other interruptions.

5. Construct Bridge 3.0. Construction would generally follow typical upland assembly. The track grade would be built to the abutment locations and then concrete abutments, per the plan, would be formed/poured in place. Pre-cast bridge components would be placed/set. If temporary closures of Bridge Street are required, a traffic control plan would be utilized as described in Section 3.15.2.

6. Construct new second main line track on new permanent bridges. Once the new permanent LPO and Sand Creek bridges are completed, BNSF employees, with contractor support, would construct the new second main line track on the new permanent bridges. The temporary work bridges would be used to facilitate placement of ties and track.

Preliminary Draft for Agency Review

7. Dismantle and remove temporary work bridges and temporary nearshore fills. The temporary work bridges would be removed in sections, stockpiled in upland staging areas as needed, and ultimately removed from the site. The temporary work bridge piles would be removed with a vibratory hammer as needed. The temporary nearshore fills would be removed once temporary work bridge removal allows.
8. Final grading, cleanup, and stabilization. While the temporary work bridges are being dismantled and removed from site, all remaining final grading and track construction would occur in upland areas within the Project limits. Disturbed areas within the Project limits would be stabilized using erosion and sediment control best management practices (BMPs; e.g., mulch, seed, sediment fences) to control stormwater discharges as required by the CWA Section 402 National Pollutant Discharge Elimination System (NPDES) permit and CWA Section 401 WQC. Permanent fencing, where appropriate to promote safety, would be constructed within BNSF ROW, and temporary construction fencing and erosion control measures would be removed and stabilized. Final inspection punch-list items would be addressed at this time.
9. Demobilize. All construction supplies and equipment would be removed from the staging areas; Project completed. Staging areas would be restored to BNSF standards.

2.3.2 Temporary Work Bridge Demolition

The temporary work bridges would not be demolished until the new bridge(s) are in place and completed work includes new track installation and the bridge being ready for service. At that time, bridge components would be partially disassembled, breaking the spans down to manageable pieces that can be safely removed from the temporary work bridges. A crane would be used to hoist sections of the bridge to either a flatbed or dump truck. These parts would either be removed entirely from the Project area and/or stockpiled at the staging areas to be further dismantled or removed after construction has been completed.

Appendix B includes site photographs of existing conditions that depict the bridge locations and conceptual renderings of the relationship between the proposed new bridges and the existing bridges. BMPs would be implemented during the temporary work bridge demolition to prevent temporary work bridge materials from entering Sand Creek or LPO. BNSF will coordinate with IDEQ to select specific BMPs and appropriate containment measures that meet state water quality standards and permit conditions.

Demolition includes temporary work bridge removal, including staging setouts or work platforms. This work would occur in sequential order and generally proceed toward the abutments. All temporary piles would be removed with a vibratory extractor.

2.3.3 Site Rehabilitation

Site rehabilitation includes final grading along the new rail grade and around upland areas associated with the new bridge abutments, removing temporary fills associated with the access roads, adding temporary at-grade crossings, and seeding/mulching open disturbed areas. Where there is sufficient soil, shoreline planting of riparian trees and shrubs and removing temporary construction materials such as fencing, signage, and erosion control products will take place. These are the final construction-related actions associated with this Project.

Preliminary Draft for Agency Review

2.3.4 Construction Equipment

The Project would require the use of a wide array of construction equipment. **Table 3** includes a list of Project equipment expected to be used on-site, as well as the expected use and the typical maximum noise level(s) for each piece of equipment as measured from 50 feet away (Washington State Department of Transportation [WSDOT] 2018). If other types of equipment are needed during this Project, specifications, size, and noise levels would fall within the parameters of the equipment in **Table 3**.

Table 3: Construction Equipment List, Use, and Reference Maximum In-Air Noise Levels

Equipment	Expected Use	L_{max} (dBA)
Backhoe	Access road and abutment construction	78
Chainsaw	Clear work area and construction pad	84
Compactor	Compact fill material for ramps, access roads, and staging areas	83
Compressor	Bubble curtain and hand tools	78
Concrete Mixer Truck	New abutments, piles, and decking	79
Concrete Pump Truck	New abutments, piles, and decking	81
Crane	Bridge construction, work bridges, piles, etc.	81
Drill Rig Truck	Geotechnical or subsurface investigation	79
Drum Mixer	Mix concrete or fill material	80
Dump Truck	Deliver supplies and remove rock and soil	76
Excavator	Access road and abutment work	81
Flat Bed Truck	Move supplies and bridge components	74
Front End Loader	Move supplies and bridge components	79
Generator	Power for hand tools and small equipment	81
Generator (<2kVA)	Power roadway signage	73
Vibratory Pile Driver	Installation and removal of in-water piles	101
Impact Pile Driver	Installation of upland and in-water piles	110
Lift	Access	75
Pickup Trucks	Construction worker site access	75
Pneumatic Tools	Power hand tools	85
Rock Drill	Rock removal	81
Roller	Compact fill for access roads	80
Welder/Torch	Welding of steel bridge components	74

Notes:
dBA – A-weighted decibels
L_{max} = highest time-weighted sound level measured

Preliminary Draft for Agency Review

2.3.5 Construction Schedule and Design Year

LPO has no in-water work window for avoiding impacts to aquatic resources, such as listed endangered species or designated critical habitat. However, since LPO water levels are controlled by the downstream Albeni Falls Dam, nearshore fills would be completed during low- or no-water times in the winter months. **Table 4** summarizes the general work activities sequencing and a three to four-year construction timeline, although construction may take up to five years. The current proposed start date is Spring 2019, after completion of the NEPA process.

Table 4: General Work Activities Sequencing and Timeline

2019	Develop/improve existing access and upland staging areas Wetland and nearshore structural fills Begin temporary work bridges
2020	Finish structural fills Finish temporary work bridge(s) construction Begin permanent bridge(s) pile driving
2020–2021	Finish permanent bridge(s) pile driving Install permanent bridge spans Track and infrastructure construction Remove temporary work bridge (3.1) before summer pool 2021
2022	Finish track and infrastructure construction Remove temporary work bridge (3.9) Remove temporary fill, stabilize, and restore Demobilize construction equipment and materials

Preliminary Draft for Agency Review

3.0 AFFECTED ENVIRONMENT AND ENVIRONMENTAL CONSEQUENCES

This section describes the affected environment and potential environmental effects of the No Action Alternative and Proposed Action Alternative by resource area. The Project passes through urban developed areas, rural developed areas, LPO, and over roads and recreational pathways but is confined to the BNSF ROW. Unless otherwise noted by resource, the study area for this EA is the BNSF ROW from MP 2.9 to MP 5.1 and varies between 100 and 400 feet wide, extending from 50 to 200 feet on either side of the track centerline.

Each resource section describes the existing affected environment (existing condition of each resource) and evaluates potential environmental effects on those resources for each alternative. Although only relevant resource areas are evaluated for impacts, the USCG considered all resources in the study area and determined which could be eliminated from further review based on minimal or no effect:

- **Prime and Unique Farmland**. No farmland, or potential farmland exists in the Project study area; therefore, the Project would have no effect on these resources and they are not discussed further in this EA.
- **Socioeconomics: Economy/Employment**. The Project does not propose changing train operations beyond improving the fluidity of train traffic, and therefore would not permanently impact businesses or community facilities in the Sandpoint area. Temporary impacts to roads and pedestrian access routes are discussed in Sections 3.11 and 3.15. Businesses within the Sandpoint area would temporarily benefit from an influx in economic activity during construction. Therefore, socioeconomic impacts would be minimal or beneficial and are not discussed further in this EA.
- **Section 4(f) Property**. Railroad operations are exempt from Section 4(f) review per Section 11502 of the FAST Act; therefore, Section 4(f) properties are not discussed further in this EA.
- **Public Services and Utilities**. No major public services or utilities have been identified within the study area. If minor utility relocations are required, they would be coordinated with local utility providers and agencies as necessary. Therefore, this resource is not addressed in detail in this EA.

3.1 Air Quality

The Clean Air Act (CAA) established a comprehensive program for improving and maintaining air quality throughout the United States. The focus of the CAA is to reduce ambient concentrations of air pollutants and toxins that degrade air quality; the reduction of air pollution, in turn, improves the human and biologic environment. The intent of the CAA is achieved through permitting of stationary sources, restriction of toxic substance emissions from stationary and mobile sources, and the establishment of National Ambient Air Quality Standards as set by the USEPA.

The CAA prohibits federal agencies from funding, authorizing, or approving plans, programs, or projects that do not meet or conform to the National Ambient Air Quality Standard requirements. The IDEQ is responsible for ensuring compliance with federal, state, and local air quality regulations in the state of Idaho.

Preliminary Draft for Agency Review

3.1.1 Affected Environment

The USEPA sets the national air quality standards for six common pollutants (referred to as "criteria" pollutants) emitted by any stationary and mobile (marine and/or terrestrially based) source. These standards consist of threshold levels for carbon monoxide, lead, nitrogen oxides, ozone, particulate matter (PM), and sulfur dioxide. The CAA requires the USEPA to designate each area of Idaho in one of three ways: attainment (meeting a standard), nonattainment (failing to meet a standard), and unclassifiable (not enough information to classify).

The Sandpoint area was designated nonattainment for PM smaller than 10 micrometers (PM_{10}) in 1997. An emissions inventory identified the primary PM_{10} source as residential wood burning. Fugitive road dust and some industrial sources were also considered contributors.

In December 2011, IDEQ submitted a PM_{10} Limited Maintenance Plan and Re-Designation Request to the USEPA to redesignate the area to attainment status. The plan focused on a comprehensive residential wood combustion program, controls on fugitive road dust, and emission limitations on industrial sources. In April 2013, the USEPA redesignated the Sandpoint area to attainment for PM_{10} (IDEQ 2017). The Sandpoint area is in attainment for all other criteria pollutants.

<u>Operational Emissions</u>

During both idle and drive-through states, trains can generate various emissions including fugitive dust ($PM_{2.5}$, PM_{10}, and total suspended particulates) and combustion (carbon monoxide, nitrogen oxides, sulfur dioxide, $PM_{2.5}$, PM_{10}, total suspended particulates, volatile organic compounds [VOCs], hazardous air pollutants, and diesel PM)(Washington State Department of Ecology [WDOE] and Cowlitz County 2017). Drive-through trains have relatively low PM emissions while optimizing fuel efficiency; however, high-combustion temperatures also result in higher nitrogen oxide emissions than are observed during idle states. During idle, emissions of other pollutants tend to be higher due to lower fuel efficiency. The amount of smoke opacity is relatively similar between idle and various throttle positions but varies depending on the test unit used (EPA 1998).

Inefficiencies in the rail line, such as a bottleneck within the Project corridor, may result in increases in shipping truck traffic over time. Freight shipping by truck results in greater emissions than freight shipping by train. According to the USEPA (1998), "studies conducted in the U.S. and Canada have also concluded that freight transported by rail is three times cleaner than that transported by truck." For example, Department of Energy data show that HD [heavy-duty] trucks produce almost 2.5 times the quantity of NOx [oxides of nitrogen] emissions as do railroads, but only account for 75 percent as many ton-miles of freight hauled. Thus, any freight normally carried by rail that is instead hauled by trucks would increase the overall mass of emissions, even at current emissions rates.

<u>Fugitive Coal Dust</u>

The potential for coal dust emissions and/or particles falling off rail cars onto the track is greatest at the points of loading and unloading due to coal transfer at these locations. An extensive overview of studies regarding coal emissions via train transport is provided in the Millennium Bulk Terminal EIS, which proposed increasing coal transport, as well as coal stockpiling and transfer. The NEPA and SEPA EISs prepared for the Millennium Bulk Terminals – Longview project evaluated indirect impacts associated with coal emissions for the BNSF main line. The NEPA Draft EIS, which was issued by USACE, and the SEPA Final EIS, which was issued by WDOE and Cowlitz County, concluded that $PM_{2.5}$ and PM_{10} emissions at 100 feet from the tracks would

Preliminary Draft for Agency Review

be below applicable federal standards (USACE 2016; WDOE and Cowlitz County 2017). In addition, the Draft EIS issued by the Surface Transportation Board (STB) for the Tongue River project, which proposed adding new rail lines for coal transport, concluded that "concentrations of coal dust constituents . . . in soil, dust, water, and fish would be below screening levels for human exposure for all evaluated pathways" (STB 2015).

Monitoring by the Northwest Clean Air Agency found no evidence of harmful air pollution levels in more than a year's worth of air sampling data that the agency collected between February 2012 and September 2013 in Bellingham at a rail crossing (Washington Research Council 2014). Trains passing through the study area carry coal sourced from the Powder River Basin in Montana and Wyoming and travel through Idaho and into Washington. The Missoula City-County Health Department conducted an analysis of PM along the rail line in 2012, and results showed no substantial findings of coal dust (Missoulian 2012).

BNSF coal shippers must comply with BNSF's Coal Loading Rule, set forth in Item 100 Coal Dust Mitigation Requirements of BNSF Price List 6041-B, which includes minimization measures to help ensure fugitive coal dust or coal particles are not lost in transit. The Coal Loading Rule requires all shippers loading coal at any Montana or Wyoming mine to load cars in such a way that ensures coal dust emissions in transit are reduced by at least 85 percent compared to cars where no remedial measures have been taken (BNSF 2017). Testing has shown that coal loaded in a rail car with an aerodynamic bread loaf shape and treated with an approved in-transit dust suppressant reduces coal dust emissions in transit by at least 85 percent compared to cars where no remedial measures have been taken (BNSF 2010). The Coal Loading Rule contains a load profile template detailing the approved aerodynamic bread loaf shape and a list of the eight approved in-transit dust suppressants. Load profiling is performed during loading utilizing the mine's coal loading chute. The in-transit dust suppressant is applied after the coal is loaded into the railcar utilizing the mine's suppressant spraying equipment. Shippers may choose to use any of the approved in-transit dust suppressants.

The complexity of loading and unloading facilities and the variability among such facilities create challenges for designing a workable cover for the rail transportation of coal. Railcars are loaded with coal from the top using a movable chute while the train slowly travels through the loading track and generally does not stop during loading. This loading process would require covers that can automatically open and close without stopping the train and that do not obstruct the chute or other equipment at the loading facility. For unloading purposes, railcars carrying coal are designed as either bottom dump or rotary dump cars, both of which are unloaded while the train slowly travels through the unloading track and generally does not stop. Rotary dump cars are picked up by clamps and turned upside down to unload. Unloading rotary dump cars would require covers that can automatically open and close and do not obstruct the coal, the rotary clamps, or other equipment at the unloading facility. There are currently no commercially available railcar covers designed to work with existing coal loading and unloading facilities.

The current use of load profiling and dust suppressants has been shown to achieve at least an 85 percent reduction in fugitive coal and allow only trace amounts to be lost during transit, which are amounts that are well below levels that could be harmful to human or ecological health as described above.

Preliminary Draft for Agency Review

3.1.2 Environmental Consequences

No Action Alternative

BNSF is entering a third year of bridge structural maintenance and repairs on existing Bridge 3.9 over LPO, which is over 100 years old. These types of repairs are expected to continue and increase to maintain service and safety on the bridge under the No Action Alternative. Thus, when performing this maintenance, an ongoing level of equipment emissions would occur each year from diesel- and gasoline-powered equipment. This may result in temporary and localized increases in some criteria pollutants.

In the long term, the No Action Alternative would result in a continued and increased need for train idling in regional sidings and associated power-up starts from those holds. This would likely exacerbate vehicular idling on the local roadway system as vehicles queue waiting for a train to clear, leading to potential decreased air quality as compared to the Proposed Action Alternative.

Proposed Action Alternative

Temporary Construction

The Proposed Action Alternative is expected to result in short-term and localized emissions increased from the operation of diesel- and gasoline-powered equipment during construction, as well as the potential for temporary localized increase in dust under dry soil conditions. This would be expected to represent a slight increase over background air quality levels for the duration of construction activities. By implementing BMPs such as maintained emission control devices on equipment and proper dust and erosion control, this temporary emissions increase is not expected to result in a measurable impact on local or regional air quality.

Operational Emissions

Although the existing corridor has physical capacity to move more trains, additional train volumes would increase congestion and delays throughout the corridor. The need to construct a second main line track and new bridges is a response to an existing condition in which the volume of trains has increased and the single track and bridge crossing from Sandpoint Junction to the existing two main line track configuration starting at BNSF MP 5.1 has created a delay to trains and local vehicular traffic. This volume of rail traffic has steadily grown over the past three decades and is expected to continue to grow independently of the Proposed Action Alternative.

Trains must stop and wait as other trains cross and clear the existing bridges due to high traffic volume, resulting in long periods of locomotives idling and an interrelated higher rate of fuel consumption and emissions associated with trains powering up from idle holding. Enabling trains to drive through the study area, versus idle until clear tracks are available, would increase fuel efficiency, which results in slight increases in nitrogen oxides but typically results in lower emissions of other pollutants such as hydrocarbons, carbon monoxide, and PM_{10} (EPA 1998). Overall, having trains in the study area for shorter durations and reducing idling times would result in a slight improvement in local air quality.

The Proposed Action Alternative does not propose to change or increase train traffic volumes within the study area. Since the Project is anticipated to reduce vehicle traffic idling at railroad crossings, the Project is anticipated to indirectly result in an overall reduction in operational emissions in the Project corridor. Therefore, no mitigation is proposed.

Preliminary Draft for Agency Review

Fugitive Coal Dust

Since the Project does not propose to transfer, load, unload, dig, pile, or handle coal, no direct coal-related impacts associated with these activities are anticipated. The Project also does not to proposed to increase the number of coal trains passing through the study area. Research, conducted in consultation with USEPA and WDOE, shows that BNSF drive-through trains are not associated with substantial levels of fugitive coal dust (Missoulian 2012; Washington Research Council 2014; WDOE and Cowlitz County 2017). Therefore, the Project would not generate harmful levels of coal through fugitive dust and no mitigation is proposed.

Since air quality impacts beyond baseline conditions are not anticipated to result from the proposed Project, and there is likely to be an improvement in air quality related to reduced wait times and traffic queues at at-grade crossings, no mitigation for air quality impacts is proposed.

3.2 Geology, Soils, and Topography

3.2.1 Affected Environment

The geology, soils, and topography of the study area are directly related to its geomorphology. Major geologic events that have influenced existing geomorphology in the Project vicinity include prehistoric volcanic eruptions, uplift processes, epic floods, and massive landslides. No documented unique geologic features are in the work corridor.

Two levels of information were used to define the soils in the work corridor: preliminary research using the published data in the Bonner County Soil Survey (including information obtained from the Natural Resources Conservation Service Web Soil Survey and site-specific soil evaluations at wetland field data points. The Soil Survey Report of Bonner County Area, Idaho (USDA 1982) defines two main soil series in the study area: (31) Mission silt loam, 0 to 2 percent slopes and (35) Pend Oreille silt loam, 5 to 45 percent slopes.

The northern portion of the study area is mapped as (31) Mission silt loam, 0 to 2 percent slopes. The Mission series consists of somewhat poorly drained soils on terraces and terrace escarpments that formed in glaciolacustrine sediments with a mantle of volcanic ash and loess. Permeability is very slow, and slopes range from 0 to 30 percent. This soil is not on the Bonner County Hydric Soil List. The southern portion of the study area near MP 5.1 is mapped as (35) Pend Oreille silt loam, 5 to 45 percent slopes. The Pend Oreille series consists of very deep, well drained soils on mountain slopes, foothills, outwash terraces, and lateral moraines, formed in glacial till with a thick mantle of volcanic ash. Permeability is moderate in the upper part and moderately rapid below.

Overall, throughout the study area within the BNSF ROW, the native soils have been buried or replaced with fills consisting of compactable soils and structural rock since the railroad construction in the late nineteenth century. Anthropogenic constituents within the soils are discussed in Sections, 3.1.1, 3.3.1, and 3.14.1. The overall topography within the BNSF ROW is by design generally flat or has grades less than 1 percent. Although the slopes adjacent to the main line may be considered steep (45 to 65 percent) they are designed cut-and-fill slopes associated with the structural fills on which the railroad is built. At the south end of the Project, bedrock outcrops are present on the west side of the tracks.

Preliminary Draft for Agency Review

3.2.2 Environmental Consequences

No Action Alternative

The No Action Alternative would not alter any geologic, soil, or topographic features.

Proposed Action Alternative

The Proposed Action Alternative does not substantially affect or alter geology, soils, or topography within the limits of the Project. The proposed work is limited to constructing a parallel grade immediately west of the existing main line grade within the BNSF ROW. Essentially all areas proposed for construction are already altered through past construction and maintenance activities. Some small areas of existing bedrock outcrop on the west side of the tracks may be cut and excavated for improving the existing access road and at-grade crossing for safety. However, expansive cuts or alterations to these outcrops have been avoided by the Project design. While the earthwork associated with the Proposed Action Alternative is greater than that of the No Action Alternative, it would not result in a significant impact on local geology or soils. The Project would not affect the topography except for the minor lakeshore fills located adjacent to the existing rail grade for the construction of the proposed second track. The existing track/grade elevation would remain the same and the new rail grade embankment slope would remain at a 2:1 slope per standard rail specifications.

The Proposed Action Alternative would require development of access roads, staging areas, and general construction access, which would result in an overall construction footprint of approximately 50 acres. Generally, most of the area proposed for use for construction purposes was previously cleared and is currently of predominately compacted gravels used for BNSF maintenance vehicles.

Construction of bridge abutments for the new bridges would require removal of approximately 2,500 square feet of uplands. However, these areas currently have minimal vegetation, so clearing/grubbing/excavation activities would be minimal. Section 3.6 contains detailed discussion on vegetation disturbance. Approximately 100 cubic yards of soil would be excavated from the area where a bridge abutment would be built. Excavated soil would be disposed of at an approved facility or upland location away from wetlands and waters of the United States and outside the floodplain. Prior to leaving BNSF property, soil excavated from the ROW must be tested for hazardous materials; contaminated soil would be handled appropriately and disposed of at an approved disposal location.

The installation of in-water support piles for the temporary work bridges would displace approximately 2,000 square feet of substrate. However, the substrate would revert to its natural condition once the piles have been removed after construction. Pile driving is expected to temporarily increase turbidity within several meters of construction actions (Jacobs 2018e). In addition, a turbidity curtain would be used during pile driving and removal activities associated with Bridge 3.9 over LPO, which would further contain sediments and temporary increases in turbidity.

Turbidity curtains were employed by BNSF during construction of the Bridge 3.9 North/South Pier Replacement projects in 2007 and 2008. These projects were permitted under a 401 WQC dated May 11, 2007, for the nationwide permits program and required monitoring to evaluate BMP effectiveness. The monitoring type (visual or instrumental) and locations were not specified. In addition, notification to IDEQ was not required if water quality standards were exceeded. BNSF monitored water quality at random times before, during, and after pile driving for the north pier replacement project using an Analite 160 turbidimeter and NEP160 display unit, manufactured by

Preliminary Draft for Agency Review

McVan Instruments. Monitoring locations were established within the work zone and sequenced with construction. Those samples were compared to samples taken outside of the work zone. Weather and aquatic flow events were also sampled. No exceedances were detected in samples collected over 13 days of sampling on the north side of Bridge 3.9.

3.3 Water Resources and Water Quality

The CWA governs the release of pollutants into waterways. Wetlands and floodplains are discussed under Sections 3.4 and 3.5 respectively. Four sections of the CWA potentially apply to the Project Action Alternatives: Sections 401, 402, 404, and 303(d):

- Section 401 requires WQC from the state when a 404 permit or USCG bridge permit is triggered. Typically, this certification is granted by the state to which the USEPA has delegated authority to certify that the discharge would not violate the state's water quality standards. USEPA retains jurisdiction in limited cases. In Idaho, IDEQ regulates permit reviews and issuance under Section 401.
- Section 402 authorizes the USEPA, or states to which the USEPA has delegated authority, to permit the discharge of pollutants under the NPDES program. Construction projects that disturb one or more acres of ground and discharge to surface waters are required to obtain an NPDES Storm Water Construction General Permit. In Idaho, USEPA or IDEQ regulates permit reviews and issuance under Section 402.
- Section 404 of the CWA regulates the discharge of dredged or fill material into waters of the United States, including wetlands. Section 404 requires a permit from the USACE before dredged or fill material may be discharged into waters of the United States. The basic premise of the 404 program is that no discharge of dredged or fill material may be permitted if (1) a practicable alternative exists that is less damaging to the aquatic environment or (2) the nation's waters would be considerably degraded. See Section 2.0 for a more detailed discussion of the alternatives analysis under Section 404(b)(1) of the CWA and the determination of a LEDPA.
- Section 303(d) of the CWA establishes that states are to list waters that do not meet applicable water quality standards. The list includes priority rankings set by the states for the listed waters. Once the impaired waters are identified, Section 303(d) requires that the states establish total maximum daily loads (TMDLs) that would meet water quality standards for each listed waterbody. In Idaho, IDEQ is responsible for implementing the requirements of Section 303(d).

The Safe Drinking Water Act is the main federal law that ensures the quality of Americans' drinking water. Under the act, the USEPA sets standards for drinking water quality and oversees the states, localities, and water suppliers who implement those standards. The best way to maintain high-quality drinking water is to prevent contaminants from reaching drinking water sources. The Safe Drinking Water Act was amended in 1986 to require states to develop Wellhead Protection Programs.

3.3.1 Affected Environment

The proposed Project is located adjacent to and over LPO and Sand Creek, as shown in **Figure 9**. Although it is locally known as Sand Creek and is considered Sand Creek by the Idaho Department of Lands (IDL 2017), IDEQ and federal agencies consider the lower portion of Sand Creek, from LPO upstream to State Highway 200, as an inlet of LPO (USFWS 2018a; IDEQ 2018a). Regulated waters of the United States within the study area are documented in the Wetlands and Waters of the U.S. Delineation Report (**Appendix C**; Jacobs 2018b).

Preliminary Draft for Agency Review

Figure 9: National Wetland Inventory Wetlands and Surface Water

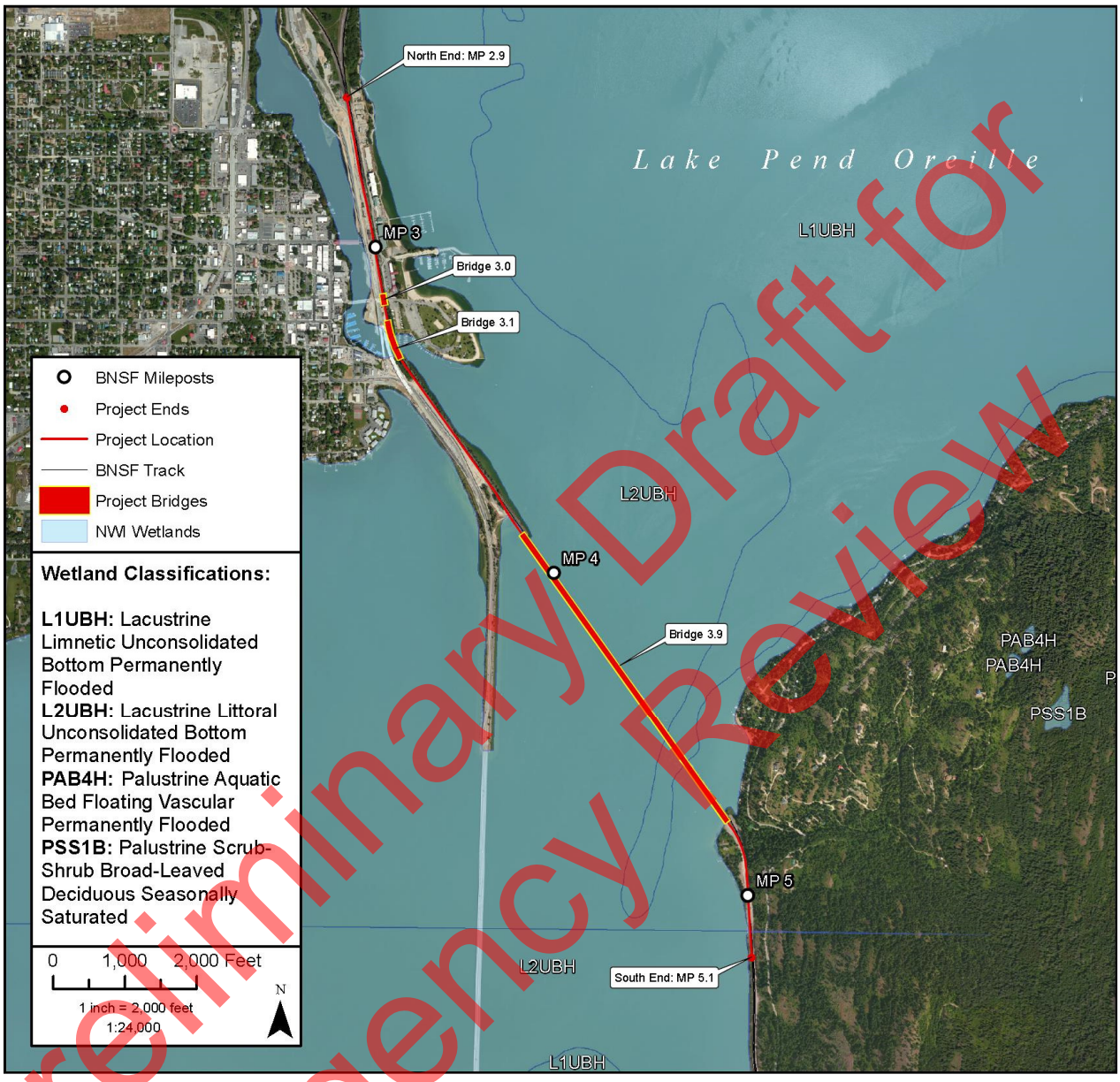

Preliminary Draft for Agency Review

LPO is a natural, temperate, oligotrophic lake. It is the largest natural lake in Idaho and the fifth deepest lake in the United States, with a mean depth of 538 feet, a maximum depth of 1,152 feet at its southern end, and a surface area of 94,720 acres. It is fed by over 20 streams originating in the Selkirk Mountains to the northwest, the Cabinet Mountains to the northeast, and the Coeur d'Alene Mountains to the east. The shoreline is composed mostly of largely undeveloped, steep, rocky terrain. The remaining littoral zone at the lake's northern end and bays consists of gradual or moderately sloping bottom, surrounded by level to gently sloping uplands and floodplain.

The Clark Fork River, originating in western Montana, is the largest tributary into the lake, providing 92 percent of the lake's inflow at the river's mouth near the City of Clark Fork, east of Sandpoint. The Pend Oreille River is the lake's only surface water outlet west of Sandpoint near the City of Dover. The river flows approximately 27 miles from LPO in Idaho into eastern Washington and then north into Canada where it joins the Upper Columbia River. The Pend Oreille River (along with LPO) is impounded by the Albeni Falls hydroelectric dam, constructed in 1955 near the Idaho/Washington border, which regulates the lake's surface elevation/pool at 2,062.5 feet from approximately mid-June through September and at 2,051 to 2,056 feet from October through May.

The Sand Creek watershed covers 38 square miles, or 24,209 acres, and includes Jack Creek, Little Sand Creek, Swede Creek, and Schweitzer Creek northeast of Sandpoint. Sand Creek generally flows from north to south for approximately 16 miles and discharges into LPO within the City of Sandpoint, where it is subject to the regulated levels of LPO. The average gradient of Sand Creek in the Project vicinity is 1 percent, and the primary channel substrate is sand.

LPO and Sand Creek within the Project study area are listed for water quality impairments that have been addressed by established loading targets (TMDLs). These include Sand Creek TMDLs for temperature and sediment approved by USEPA in 2007, and a LPO nearshore TMDL for total phosphorus approved by USEPA in 2002. LPO and Sand Creek within the Project study area are also currently listed as impaired by mercury; development of a TMDL is a medium priority for 2018. Additionally, the Pend Oreille River (including the outlet arm of LPO within the Project study area) is currently in need of TMDLs (medium priority for 2019) for temperature and dissolved gas supersaturation impairments (IDEQ 2017; IDEQ 2014).

The average annual precipitation is about 33 inches, and average annual air temperature is about 45 degrees Fahrenheit with a typical Inland Northwest climate of cold, snowy winters and dry summers with large diurnal temperature swings from hot in the day to very cool at night. Most precipitation occurs as winter snowfall and spring rain. High-volume runoff occurs during spring snowmelt and major rain-on-snow events (IDL 2003).

Drinking water for surrounding residents and businesses outside of the City of Sandpoint is supplied by private wells. The City of Sandpoint supplies drinking water from its Little Sand Creek and LPO water treatment plants (WTPs). During the fall, winter and spring, approximately 50 percent of the City of Sandpoint's drinking water supply comes from the Little Sand Creek WTP, and 50 percent from the LPO WTP. During the summer, the Little Sand Creek WTP provides approximately 25 percent of the water supply and the LPO WTP provides approximately 75 percent of the supply (Jacobs 2018f). The Little Sand Creek WTP inlet is over 5 miles upstream of the study area (Jacobs 2018f) and the LPO WTP inlet is located approximately 0.67-mile north of the Project site (IDEQ 2018a). The City of Sandpoint met and/or exceeded all standards for drinking water quality reported from 2005 through 2017 (City of Sandpoint 2005–2017).

Preliminary Draft for Agency Review

The Spokane Valley-Rathdrum Prairie Aquifer stretches southwest from the southernmost tip of LPO in Bayview, Idaho, to downtown Spokane, Washington, where it turns north–northwest to discharge groundwater into the Little Spokane and Spokane Rivers. The aquifer covers approximately 250 square miles in Idaho and 120 square miles in Washington. Designated by USEPA as a sole-source aquifer in February 1978, it supplies drinking water to over 500,000 people in Kootenai County, Idaho, and Spokane County, Washington. Although the Project site is located approximately 22 miles north of the aquifer and the Kootenai County, Idaho, Aquifer Protection District boundaries (IDEQ 2018b), the south end of LPO contributes 32 million gallons per day of water to the aquifer, or less than 4 percent of the aquifer's daily 951 million gallons per day recharge/inflow (MacInnis et al. 2009).

Wellhead protection areas are established to protect geographic areas that infiltrate to groundwater such that, if exposed to pollutants, could allow contamination of groundwater drinking water sources. No wellhead protection areas are located within the immediate Project vicinity (Idaho Department of Water Resources 2018).

3.3.2 Environmental Consequences

No Action Alternative

Under the No Action Alternative, no new construction would occur. However, ongoing maintenance and repair of the existing railroad tracks and bridges would continue as needed. These maintenance actions would require the use of construction equipment that contains petroleum products. Spills associated with the use of petroleum products during these actions could impact water quality in LPO and Sand Creek. BNSF would maintain water quality standards during maintenance activities through implementation of BMPs defined in a Spill Prevention, Control, and Countermeasure (SPCC) plan, to ensure that pollutants and products would be controlled and contained.

BNSF implements safety practices as part of regular operations to minimize accident risks and maintains response plans for addressing potential incidents as described in Section 3.14. Accident risk is a function of ton-miles of freight moved and number of rail miles travelled. Rail traffic in this corridor is likely to continue to increase as a result of population growth and the corresponding increase in the demand for freight and passenger transport. BNSF has no record of hazardous material spills or incidents associated with bridges in the study area. System wide, an average of 99.99 percent of BNSF trains transporting hazardous materials arrive without incident (BNSF 2018). While accident risk can be minimized, it cannot be eliminated. In the event of a spill, BNSF would implement the LPO Geographic Response Plan (GRP) to efficiently and safely respond, recovering the spill, and restoring damaged resources. Section 3.14 provides additional information regarding response strategies and equipment available to BNSF as part of the LPO GRP, including boat access points.

As described in Section 3.3.1, while there is a connection between LPO and the Spokane Valley-Rathdrum Prairie Aquifer, LPO's contribution to the aquifer is small (4 percent) relative to its total recharge contribution from other sources. The implementation of BMPs and safety practices to avoid and minimize contamination of LPO and the implementation of the GRP to respond to a potential spill in LPO would protect water quality in LPO and, consequently, the aquifer.

Preliminary Draft for Agency Review

Proposed Action Alternative

In addition to the construction of new track and bridges, ongoing maintenance and repair of the existing railroad tracks and bridges would continue as needed under the Proposed Action Alternative. As discussed under the No Action Alternative, these maintenance actions would require the use of construction equipment that contains petroleum products. Spills associated with the use of petroleum products during these actions could impact water quality in LPO and Sand Creek. BNSF would maintain water quality standards during maintenance activities through implementation of BMPs defined in an SPCC plan to ensure that pollutants and products would be controlled and contained.

The primary water quality impacts associated with the Proposed Action Alternative are temporary and related to construction, including potential sedimentation, potential petroleum spills from construction equipment operations, and potential spills from concrete work above the OHWM of LPO. Suspension of sediments (increased turbidity) may temporarily occur during pile driving activities within LPO but would be limited by a turbidity curtain (Jacobs 2018e). As discussed in Section 3.1.1, coal dust has not been identified at levels above federal standards for particulate matter within 100 feet of the tracks or at levels in soil, dust, water, or fish above screening levels for human exposure during environmental review of other projects involving the WDOE and USEPA. Therefore, coal dust is not expected to be present in deposited sediment in sufficient concentration to impact water resources during construction despite increases in turbidity near pile driving.

The primary pollutants of concern for this Project are sediment and phosphorus (IDEQ 2018a). Elevated phosphorus levels in waterbodies can lead to increased algal growth and subsequent die off that can reduce dissolved oxygen levels as decomposition of the dead algae occurs. Sediment entering a waterbody from upland erosion can contain substantial amounts of phosphorus. Appropriate erosion control BMPs such as silt fences, silt curtains, and straw wattles will be implemented to minimize the amount of sediment and phosphorus entering waterbodies including LPO and in-water turbidity (IDEQ 2018a). As the water intake for the City of Sandpoint's LPO WTP is located 0.67-mile north of the Project site, the Little Sand Creek WTP is over 5 miles upstream of the Project site, and the general flow pattern of water near the intake is south toward the proposed Project construction, IDEQ has reasonable assurance that water quality standards for this domestic water supply use would be met (IDEQ 2018a). Water quality impacts associated with suspended sediments are further discussed in Section 3.2.

While fill placed in waters of the United States are regulated by USACE under Section 404 of CWA, projects that require work in or above water must meet water quality standards in compliance with Section 401 of the CWA. An Individual 401 WQC has been issued for the Proposed Action Alternative. Construction projects that disturb more than one acre of upland areas must obtain an NPDES permit from IDEQ in compliance with Section 402 of the CWA. The Proposed Action Alternative would result in approximately 20 acres of ground-disturbing activities and would require an NPDES permit. A Stormwater Pollution Prevention Plan (SWPPP), including a Temporary Erosion and Sediment Control Plan and a SPCC plan would be prepared in accordance with the requirements of the NPDES permit.

Preliminary Draft for Agency Review

Implementation of BMPs defined within the 401 WQC and the SWPPP as well as ongoing adaptive management adjustments throughout construction would be the means to maintain water quality standards during construction (see Section 4.0). Specifically, to minimize sediment impacts, a turbidity curtain would be used during in-water ground disturbance activities in water deeper than 3 feet. To prevent and minimize spill impacts, fully stocked petroleum containment spill kits would be located at power equipment work sites and construction staging areas during construction. Potential temporary impacts to water quality during construction are considered less than significant.

In the long-term, the Proposed Action Alternative would not result in increased impacts to water quality from operations. Train traffic has increased over the past 30 years, and it is reasonable to expect that it will continue to do so as population increases and demand for movement of freight and passenger increases. However, the main factors driving this increase exist independent of the Proposed Action Alternative. Some of the trains travelling through the study area would travel on new, modern, more reliable infrastructure requiring less maintenance reducing the chance for spills associated with maintenance activities. There are no proposed freight origin or destination facilities related to the Project or anticipated to be initiated due to this Project. The type of freight currently carried would not change with the proposed main line track. As indicated for the No Action Alternative, accident risk is a function of the number of rail miles travelled by trains and BNSF has safety practices and response plans in place to minimize risk and address potential results. The Proposed Action Alternative adds a second set of main line tracks and would not increase the overall length of the rail line or the number of trains travelling on it. In the event of an accident or spill, BNSF would respond in accordance with the LPO GRP (see Section 3.14), just as under the No Action Alternative.

As under the No Action Alternative, while there is a connection between LPO and the Spokane Valley-Rathdrum Prairie Aquifer, LPO's relatively small recharge contribution, implementation of BMPs and safety practices to avoid and minimize contamination of LPO, and the implementation of the GRP to respond to a potential spill would protect water quality in LPO and, consequently, the aquifer.

The construction of a second main line track would impact 1.54 acres of waters of the United States, including wetlands, as described below and illustrated in **Appendix D**:

- 0.88 acre related to permanent nearshore fill below the LPO OHWM elevation of 2,062.5 feet above mean sea level for Bridge 3.1, Bridge 3.9, and a south switch area
- 0.28 acre of permanent wetland fill at the south end of Bridge 3.1
- 0.38 acre of temporary nearshore impacts below the OHWM in LPO for construction access at various locations throughout the Project work limits

The wetland and in-water fill required for construction of the new, second main line track and bridges is further discussed in Section 3.4. This work triggers the need for a CWA Section 404 and/or Section 10 permit from the USACE. The wetland impacts would be fully mitigated in compliance with the CWA through the use of a mitigation bank. The impacts associated with nearshore fill would be mitigated through a strategy developed through ongoing work of a collaborative group of agencies, Tribes, and LPO and Sand Creek stakeholders as discussed in Section 4.0. IDEQ has reviewed the Project for compliance with CWA Section 401 and issued an Individual WQC.

Preliminary Draft for Agency Review

3.4 Wetlands

Executive Order 11990 – Protection of Wetlands requires federal agencies to act to minimize the destruction, loss, or degradation of wetlands and to preserve and enhance the natural and beneficial values of wetlands. Wetlands adjacent to navigable waters, tributaries of navigable waters, or with a major nexus to interstate commerce are regulated pursuant to the CWA. Section 404 of the CWA defines wetlands as areas that are "inundated or saturated by surface or groundwater at a frequency and duration sufficient to support a prevalence of vegetation typically adapted for life in saturated soil conditions." Wetlands generally include swamps, marshes, bogs, and similar areas.

3.4.1 Affected Environment

The National Wetland Inventory mapping did not identify any wetlands in the Project study area but mapped LPO as L2UBH (lacustrine, littoral, unconsolidated bottom, permanently flooded) (**Figure 9**). During the Project plan development, one jurisdictional wetland (Wetland A) was identified, delineated, and mapped at the south end of Bridge 3.1 between the rail grade and US 95 multiuse public pathway. Its functions and values were evaluated using the *MDT Montana Wetland Assessment Form*. The results of the delineation and functional assessment are documented in the Wetlands and Waters of the U.S. Delineation Report (**Appendix C**; Jacobs 2018b). This wetland, at 0.28 acre, is connected to, and appears to be associated with, the high water inundation of the lake and may be a direct result of the construction of the Albeni Falls Dam in the 1950s. It fulfills the jurisdictional criteria of hydrology, hydric soils, and hydrophytic vegetation presence.

LPO is regulated for flood control and power production so the water depth varies seasonally in connection with operations at the Albeni Falls Dam. The OHWM of LPO is 2,062.5 feet. LPO below this elevation is considered "Deep Water Aquatic Habitat" per the 1987 wetland delineation manual. By definition, "Deepwater aquatic habitats are areas that are permanently inundated at mean annual water depths >6.6 feet or permanently inundated areas ≤6.6 feet in depth that do not support rooted-emergent or woody plant species" (Environmental Laboratory 1987).

3.4.2 Environmental Consequences

No Action Alternative

The No Action Alternative would not require ground disturbance and, therefore, would not result in any wetland impacts.

Proposed Action Alternative

As stated in Section 3.3.2, the Proposed Action Alternative would result in the unavoidable temporary and permanent filling of 1.54 acres of jurisdictional waters of the United States, as shown in **Appendix D**.

Temporary impacts would consist of the placement of 0.38 acre of temporary nearshore fill and the installation of up to 600 temporary 24-inch-diameter piles in LPO and 40 temporary 24-inch-diameter piles in Sand Creek, for a total of approximately 2,010 square feet. The fill material and temporary piles would be required to support temporary work bridges during the construction of Bridge 3.1 and Bridge 3.9. This fill material and temporary piles would be removed upon completion of the new permanent structures. The Proposed Action Alternative would not have temporary effects to wetlands.

Preliminary Draft for Agency Review

Permanent impacts would consist of the placement of 0.88 acre of nearshore fill and the installation of 288 permanent 36-inch-diameter piles below the OHWM of LPO and 22 permanent 24-inch-diameter piles below the OWHM of Sand Creek to support new Bridge 3.1 and Bridge 3.9. The permanent piles would occupy approximately 2,104 square feet below the OHWM. The entire 0.28 acre of Wetland A would also be permanently filled. Permanent impacts to Wetland A are illustrated in **Appendix D**.

Permanent impacts associated with fill in Wetland A would be fully mitigated through an agency-approved mitigation bank, the Valencia Wetland Mitigation Bank/Valencia Wetlands Trust (bank) located in Priest River, Idaho. As discussed in Section 4.2, 0.95 bank credits would be purchased to compensate for the 0.28 acre of wetland fill. As Wetland A impacts would be fully mitigated, the Proposed Action Alternative would meet requirements under the CWA associated with mitigation of impacts to wetlands.

As discussed in Section 4.2, proposed mitigation for 0.88-acre of permanent nearshore fills would be satisfied via LPO and Sand Creek stakeholders through a collaborative consensus-based process. Participating stakeholders since May 2018 include the USFWS, the Idaho Department of Fish and Game (IDFG), IDEQ, Tribes, and other representatives from the Avista Clark Fork Project and the Panhandle Chapter of Trout Unlimited. The stakeholders are focused on identifying existing and future watershed projects that are suitable and appropriate to mitigate impacts to affected nearshore areas and aquatic resources.

3.5 Floodplains

Executive Order 11988, Floodplain Management requires federal agencies to consider how their actions may encourage future development in floodplains and to minimize such development. U.S. Department of Transportation (USDOT) Order 5650.2, Floodplain Management and Protection, prescribes policies and procedures for ensuring that federal agencies consider the avoidance and mitigation of adverse floodplain impacts in its actions. USDOT Order 5650.2 requires agencies to determine whether an encroachment into a floodplain is considered significant, which is defined as an encroachment resulting in one or more of the following construction or flood-related impacts:

1. A considerable probability of loss of human life.
2. Likely future damage associated with the encroachment that could be substantial in cost or extent, including interruption of service on or loss of a vital transportation facility.
3. A notable adverse impact on "natural and beneficial floodplain values," which include the natural moderation of floods, water quality maintenance, groundwater recharge, fish, wildlife, plants, open space, natural beauty, scientific study, outdoor recreation, agriculture, aquaculture, and forestry.

3.5.1 Affected Environment

LPO and Sand Creek are both mapped as Zone AE on the Federal Emergency Management Agency's (FEMA) effective Flood Insurance Rate Map for this area (Panel 16017C0718E), as shown in **Figure 10**. The effective 100-year Base Flood Elevation (BFE) is mapped at 2,074 feet (North American Vertical Datum 1988). Sand Creek has a mapped regulatory floodway in this area that extends up to the eastern edge of existing Bridge 3.1. USACE also has a flood flowage easement up to 2,067.5 feet in elevation to regulate emergency conditions at and downstream of the Albeni Falls Dam.

Preliminary Draft for Agency Review

Figure 10: Floodplains

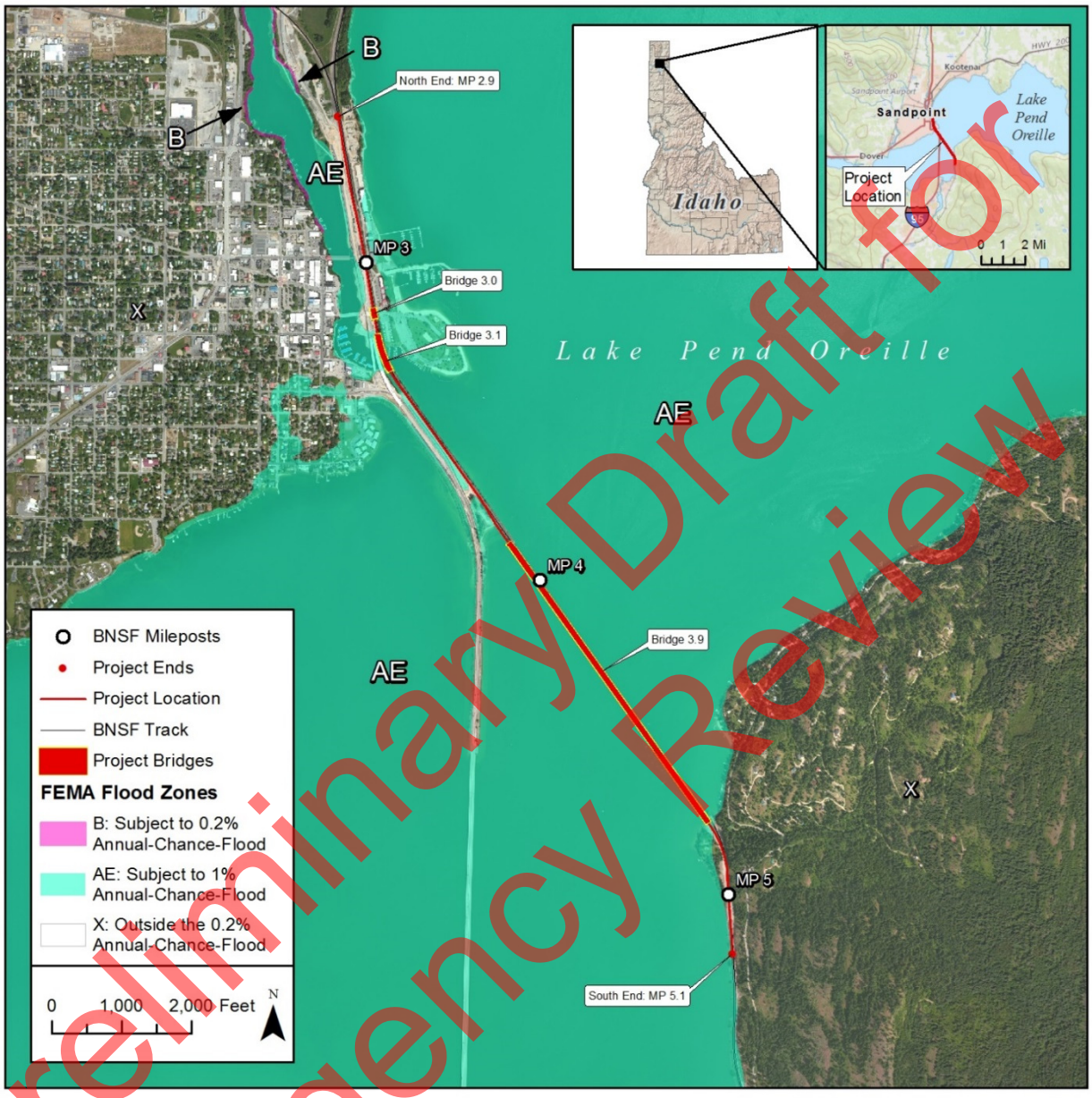

Preliminary Draft for Agency Review

3.5.2 Environmental Consequences

No Action Alternative

The No Action Alternative would not require additional fill or excavation on the Project site, nor would it encourage future development in floodplains. There would be no encroachment on floodplains associated with the No Action Alternative.

Proposed Action Alternative

Table 5 shows the amount of temporary and permanent fill that would be placed within the floodplain of Sand Creek and LPO under this alternative. This encroachment is required to construct the new bridges and south switch area and provide support for the new rail grade. These fills constitute a small percentage of the total area of LPO and USACE flood flowage easement and are not expected to increase the danger of flooding in the study area.

The proposed temporary and permanent bridges require installation of 950 steel pipe piles in Sand Creek and LPO. However, as shown in the permit drawings in **Appendix A**, the low chord of the new permanent and temporary bridge decks would be constructed above the 100-year BFE, minimizing the risk associated with the encroachment.

Table 5: Temporary and Permanent Floodplain Fill Volumes

Source of Fill		Sand Creek	Lake Pend Oreille	Total
Permanent Fill (cubic yards)	Earth	15	1,485	1,500
	Bridge Piles	13	1,783	1,796
	Total Permanent	28	3,268	3,296
Temporary Fill (cubic yards)	Earth	0	800	800
	Bridge Piles	56	1,359	1,415
	Total Temporary	56	2,159	2,215

Local floodplain development permits are required to comply with FEMA National Flood Insurance Program standards. Applications for these permits typically include statements and supporting technical analyses showing that the Project meets the intent of a “no-rise” in 100-year BFEs. This technical analysis takes the form of a hydraulic analysis, which was completed for the Project utilizing a HEC-RAS modeling program (**Appendix E**). The analysis utilized publicly available data from FEMA, topographic data from the USACE, bathymetric data, record drawings of the existing railroad and US 95 bridges, and the proposed design for Bridges 3.1 and 3.6. The analyses indicated that the proposed bridge crossings over Sand Creek and LPO would result in no net rise in the 100-year BFE, meeting the intent of a FEMA “no-rise” certification. BNSF is working with Bonner County and the City of Sandpoint to prepare the floodplain development applications utilizing the results of the hydraulic analysis.

Preliminary Draft for Agency Review

In addition to considering the role of floodplains in the natural moderation of floods, FEMA also regulates floodplain impacts as they relate to water quality maintenance, groundwater recharge, fish, wildlife, plants, open space, natural beauty, scientific study, outdoor recreation, agriculture, aquaculture, and forestry, which are considered "natural and beneficial floodplain values." There is no known agriculture, aquaculture, forestry, or scientific study occurring on floodplains within the study area. There would be no substantial impacts to water quality maintenance and groundwater recharge, fish, wildlife, plants, open space, natural beauty, or outdoor recreation as discussed in Sections 3.3, 3.7, 3.12, and 3.11.

The Proposed Action Alternative would not increase or change rail traffic volumes on BNSF's northern tier and is not expected to facilitate future increases in floodplain development. The Project is not tied to public or private development and is not associated with land use, regional plans for growth or commercial and residential development. Federal Transit Administration (FTA) guidance states: "Expansion of a facility already located within a floodplain usually would not be considered a significant encroachment" (FTA 2018). The Proposed Action Alternative would not result in a significant encroachment into the floodplain or significantly impact the 100-year BFE.

3.6 Vegetation

Vegetation stabilizes soils, controls erosion, and reduces sedimentation. Vegetation also provides habitat and forage for wildlife. Executive Order 13112 established the National Invasive Species Council to deal with invasive species. The Idaho Invasive Species Council is a multiagency organization that provides direction and planning for combatting invasive species' introduction and spread. The Director of the Idaho State Department of Agriculture (ISDA) chairs the council (State of Idaho 2017). This order provides guidance on public, private, commercial, and agency protocol to avoid the introduction and spread of aquatic invasive species. Idaho has 67 weed species and 4 genera designated noxious by state law; 51 of these species are terrestrial and the remainder are aquatic species (ISDA 2018a).

3.6.1 Affected Environment

Disturbed upland grasses in the Project work corridor include species such as cheat grass (*Bromus tectorum*), common mullein (*Verbascum thapsus*), common timothy (*Phleum pretense*), orange hawkweed (*Hieracium aurantiacum*), panic grass (*Panicum sonorum*), perennial rye grass (*Lolium perenne*), rush skeleton weed (*Chondrilla juncea*), spotted knapweed (*Centaurea maculosa*), and western wheatgrass (*Pascopyrum smithii*).

The riparian vegetation of Sand Creek and LPO includes emergent species such as reed canarygrass (*Phalaris arundinaceae*), stinging nettle (*Urtica dioica*), and common sedges (*Carex sp.*) and scrub-shrub and forest species such as black cottonwood (*Populus trichocarpa*), red alder (*Alnus rubra*), blue elderberry (*Sambucus cerulean*), Rocky Mountain maple (*Acer glabrum*), Scouler's willow (*Salix scouleriana*), red-osier dogwood (*Cornus sericea*), Nootka rose (*Rosa nutkana*), Pacific ninebark (*Physocarpus capitatus*), trailing blackberry (*Rubus ursinus*), and Douglas spirea (*Spiraea douglasii*).

Wetland vegetation in the one wetland identified in the Project work corridor includes species such as common cattail (*Typha latifolia*), common duck weed (*Lemna minor*), and panicled bulrush (*Scirpus microcarpus*), in addition to the riparian vegetation described above. LPO contains Eurasian watermilfoil (ISDA 2018b).

Preliminary Draft for Agency Review

The upland forested vegetation in the study area includes species such as Douglas fir (*Pseudotsuga menziesii*), lodgepole pine (*Pinus contorta*), Ponderosa pine (*Pinus ponderosa*), western hemlock (*Tsuga heterophylla*), and Western red cedar (*Thuja plicata*), and is often mixed with an understory of American trailplant (*Adenocaulon bicolor*), common snowberry (*Symphoricarpos albus*), myrtle pachystima (*Pachystima myrsinites*), Nootka rose (*Rosa nutkana*), and various native and non-native grasses.

3.6.2 Environmental Consequences

No Action Alternative

Other than the removal of the cottonwood trees that presently threaten the integrity of the track structure along the west side of the main line associated with ongoing maintenance, no other vegetation impacts are anticipated to occur under this alternative. Potential impacts to upland vegetation would not be extensive with total vegetation disturbance of approximately 0.5 acre.

Proposed Action Alternative

The Proposed Action Alternative is within the BNSF ROW, and 90 percent of the work is within areas already filled or highly altered and compacted, requiring minimal vegetation impacts. The Sand Creek Bridge (3.1) and the LPO Bridge (3.9) would both result in losses of the cottonwood trees that are growing out of the existing rail grade base. These trees are already scheduled for removal because they pose a danger to trains if they fell on the tracks and to the stability of the rail grade if they were to blow over and pull out the structural support base with their root mass.

Approximately 3 acres of vegetation disturbance would occur under the Proposed Action Alternative. This includes the removal of approximately 0.75 acre of upland trees, 1 acre of upland grasses, approximately 1 acre of riparian vegetation, and 0.2 acre of wetland vegetation. This equates to approximately 6 percent of the upland tree acreage, 20 percent of the upland grass acreage, 16 percent of the riparian vegetation, and 100 percent of the wetland acreage within the Project study area.

Invasive plant species are a common concern during construction activities due to the clearing and grading activities potentially leaving open soil susceptible to weed seeds pioneering the area. BMPs, such as limiting clearing to those areas necessary for safe equipment operations and temporarily seeding or mulching areas during construction, would avoid and minimize available areas for weed seed infestation or spread. Additionally, prior to machinery arriving on-site, inspecting and cleaning would be performed to minimize the potential for bringing new invasive seeds or vegetation pieces onto the sites.

Aquatic invasive species are a concern when working above, in, or near water. Invasive plants can be spread by equipment and result in indirect impacts. To help prevent the spread of invasive species, equipment would be cleaned to the greatest extent practical prior to arrival and immediately after leaving the Project site. Cleaning could include scraping/sweeping off any debris or soil and pressure washing at an off-site location before transportation to the work site. To prevent the introduction or spread of invasive aquatic species for this proposal, Project-specific watercraft inspection criteria and operating protocol have been developed (see impact minimization measures in Section 4.1).

Preliminary Draft for Agency Review

Boats, barges, and overwater machinery must obtain an aquatic invasive species sticker from the Bonner Soil & Water Conservation District, on behalf of ISDA, which would require thorough inspection for invasive species and cleaning as needed prior to accessing LPO or Sand Creek (ISDA 2014). This protocol would be in effect during the entire Project, with enforcement conducted by the Bonner County Sheriff's Office and the Bonner Soil & Water Conservation District.

All wetland vegetation would be removed in the 0.28-acre wetland fill south of Bridge 3.1. Due to the limited disturbance area, implementation of mitigation measures and BMPs, and lack of sensitive or endangered plant species identified within the impact areas, the Proposed Action Alternative would not have significant vegetation impacts.

3.7 Fish and Wildlife

The Migratory Bird Treaty Act (MBTA) provides protection for migratory birds, making it unlawful to capture, kill, or sell birds, parts, nests, eggs, or products. Under the MBTA, the term "migratory birds" includes all bird species native to the United States, and the Act pertains to any time of the year, not just during migration. The Bald and Golden Eagle Protection Act provides for the protection of bald and golden eagles by prohibiting the taking, possession, and commerce of such birds, except under certain specified conditions.

As discussed under Section 3.6, an interagency organization and Executive Order 13112 serve to prevent and reduce the spread of invasive species.

3.7.1 Affected Environment

Idaho has an array of native birds, fish, and invertebrates as described below. Idaho also has invasive invertebrates, insects, mollusks, nematodes, fish, amphibians, birds, mammals, and reptiles (ISDA 2018a).

Numerous species of fish and wildlife use the study area as either foraging habitat, refuge, or for nesting or spawning. Some species that inhabit the area near the bridge are anticipated to be tolerant of moderate disturbances typical of railways. Other species may be less tolerant, depending on the level and duration of disturbance.

Birds

LPO and surrounding environments provide suitable foraging, nesting, and dispersal habitat for numerous species of avifauna. Numerous species utilize LPO, its tributaries and backwaters, and the surrounding uplands during various times of the year for various life stages. Many waterfowl species utilize the area for nesting and for overwintering or as a stopover during periods of migration. **Table 6** lists observed birds in Bonner County documented by IDFG (2018).

Preliminary Draft for Agency Review

Table 6: Bonner County Birds

Species	Species	Species
American Coot (*Fulica americana*)	ring-necked duck (*Aythya collaris*)	lesser yellowlegs (*Tringa flavipes*)
American crow (*Corvus brachyrhynchos*)	hooded merganser (*Lophodytes cucullatus*)	Lewis's woodpecker (*Melanerpes lewis*)
American dipper (*Cinclus mexicanus*)	lesser scaup (*Aythya affinis*)	Lincoln's sparrow (*Melospiza lincolnii*)
American goldfinch (*Spinus tristis*)	horned grebe (*Podiceps auritus*)	peregrine falcon (*Falco peregrinus*)
American kestrel (*Falco sparverius*)	least sandpiper (*Calidris minutilla*)	pied-billed grebe (*Podilymbus podiceps*)
American robin (*Turdus migratorius*)	house finch (*Haemorhous mexicanus*)	turkey vulture (*Cathartes aura*)
American wigeon (*Anas americana*)	house sparrow (*Passer domesticus*)	pileated woodpecker (*Dryocopus pileatus*)
Anna's hummingbird (*Calypte anna*)	house wren (*Troglodytes aedon*)	pine siskin (*Spinus pinus*)
bald eagle (*Haliaeetus leucocephalus*)	indigo bunting (*Passerina cyanea*)	pygmy nuthatch (*Sitta pygmaea*)
barn swallow (*Hirundo rustica*)	killdeer (*Charadrius vociferus*)	red-breasted nuthatch (*Sitta canadensis*)
Barrow's goldeneye (*Bucephala islandica*)	king eider (*Somateria spectabilis*)	red-breasted merganser (*Mergus serrator*)
belted kingfisher (*Megaceryle alcyon*)	lark sparrow (*Chondestes grammacus*)	red-breasted sapsucker (*Sphyrapicus ruber*)
black-capped chickadee (*Poecile atricapillus*)	red-tailed hawk (*Buteo jamaicensis*)	ruby-crowned kinglet (*Regulus calendula*)
black-headed grosbeak (*Pheucticus melanocephalus*)	red-winged blackbird (*Agelaius phoeniceus*)	savannah sparrow (*Passerculus sandwichensis*)
Bonaparte's gull (*Chroicocephalus philadelphia*)	ring-billed gull (*Larus delawarensis*)	Say's phoebe (*Sayornis saya*)
Brewer's blackbird (*Euphagus cyanocephalus*)	MacGillivray's warbler (*Geothlypis tolmiei*)	short-eared owl (*Asio flammeus*)
brown-headed cowbird (*Molothrus ater*)	mallard (*Anas platyrhynchos*)	hermit thrush (*Catharus guttatus*)
bufflehead (*Bucephala albeola*)	long-billed curlew (*Numenius americanus*)	song sparrow (*Melospiza melodia*)
Bullock's oriole (*Icterus bullockii*)	marsh wren (*Cistothorus palustris*)	Harris's sparrow (*Zonotrichia querula*)
northern flicker (*Colaptes auratus*)	merlin (*Falco columbarius*)	spotted towhee (*Pipilo maculatus*)
California gull (*Larus californicus*)	mew gull (*Larus canus*)	Stellar's jay (*Cyanocitta stelleri*)
California quail (*Callipepla californica*)	mountain bluebird (*Sialia currucoides*)	Swainson's thrush (*Catharus ustulatus*)
Canada goose (*Branta canadensis*)	mountain chickadee (*Poecile gambeli*)	tree swallow (*Tachycineta bicolor*)
canvasback (*Aythya valisineria*)	mourning dove (*Zenaida macroura*)	trumpeter swan (*Cygnus buccinator*)

Preliminary Draft for Agency Review

Table 6: Bonner County Birds (continued)

Species	Species	Species
Caspian tern (*Hydroprogne caspia*)	Nashville warbler (*Oreothlypis ruficapilla*)	tundra swan (*Cygnus columbianus*)
chestnut-backed chickadee (*Poecile rufescens*)	Western Grebe (*Aechmophorus occidentalis*)	yellow-breasted chat (*Icteria virens*)
common goldeneye (*Bucephala clangula*)	northern pintail (*Anas acuta*)	varied thrush (*Ixoreus naevius*)
common loon (*Gavia immer*)	northern rough-winged swallow (*Stelgidopteryx serripennis*)	violet-green swallow (*Tachycineta thalassina*)
common merganser (*Mergus merganser*)	northern shoveler (*Anas clypeata*)	warbling vireo (*Vireo gilvus*)
northern harrier (*Circus cyaneus*)	northern shrike (*Lanius excubitor*)	western meadowlark (*Sturnella neglecta*)
common yellowthroat (*Geothlypis trichas*)	downy woodpecker (*Picoides pubescens*)	white-crowned sparrow (*Zonotrichia leucophrys*)
dark-eyed junco (*Junco hyemalis*)	western wood-pewee (*Contopus sordidulus*)	western tanager (*Piranga ludoviciana*)
double-crested cormorant (*Phalacrocorax auritus*)	yellow-rumped warbler (*Setophaga coronata*)	wild turkey (*Meleagris gallopavo*)
eared grebe (*Podiceps nigricollis*)	Emden-style goose (*Anser domesticus*)	willow flycatcher (*Empidonax traillii*)
fox sparrow (*Passerella iliaca*)	olive-sided flycatcher (*Contopus cooperi*)	Wilson's warbler (*Cardellina pusilla*)
golden-crowned sparrow (*Zonotrichia atricapilla*)	orange-crowned warbler (*Oreothlypis celata*)	wood duck (*Aix sponsa*)
great blue heron (*Ardea herodias*)	osprey (*Pandion haliaetus*)	yellow warbler (*Dendroica petechia*)
green heron (*Butorides virescens*)	Pacific loon (*Gavia pacifica*)	harlequin duck (*Histrionicus*)
Pacific wren (*Troglodytes pacificus*)	--	--

Numerous other species are likely to utilize the study area and the surrounding uplands during various times of the year for various purposes.

Bird nests were not identified within the study area during site assessments. An uninhabited osprey pole installed in 2014 is located within BNSF ROW on the south side of existing Bridge 3.9. This EA presents two lists of birds potentially present within the study area; one list is **Table 6,** which is from IDFQ and the other list is from the Information for Planning and Consultation (IPaC) report. USFWS has a database that provides a list of migratory birds that may be affected by the Project. This database generates the IPaC report, which includes bald eagle, Cassin's finch, golden eagle, olive-sided flycatcher, and rufous hummingbird. The IPaC report is specific to the Project site. The IPaC data focuses on birds of conservation concern, which is a list of species that "without additional conservation actions, are likely to become candidates for listing under the Endangered Species Act" as specified in the 1988 amendment of the Fish and Wildlife Conservation Act. The list of birds provided in **Table 6** occur anywhere within Bonner County and are not necessarily specific to the Project area. **Table 6** also includes birds that are not of conservation concern.

Preliminary Draft for Agency Review

The rufous hummingbird prefers mountain meadows during migration and nests approximately 30 feet high in coniferous or deciduous trees. The olive-sided flycatcher breeds and winters at forest edges where tall trees or snags are present. Cassin's finch prefers coniferous forest. Migrating and wintering waterfowl are found within the greater LPO area. There are protected state and federal lands outside of the study area which provide habitat. Commonly seen species can include tundra swans, Canada geese, American widgeon, redheads, mallards, common mergansers, common goldeneye, bufflehead, and ring-necked ducks. Preferred habitats for these species within LPO include the Denton Slough located approximately 12 miles east of the study area and the Clark Fork River Delta located 14 miles east of the Project site.

A database search and field review were conducted to determine whether bald and golden eagle nests and/or communal roosts occur in the Project study area. The review concluded that no nests and/or communal roosts are located in the area.

Terrestrial Mammals

Due to the relatively high level of human-related activity associated with the rail line and US 95, generally only disturbance-tolerant terrestrial mammals are expected to occur within or around the Project site. White-tailed deer (*Odocoileus virginianus*), coyotes (*Canis latrans*), skunks (*Mephitis mephitis*), raccoons (*Procyon lotor*), muskrat (*Ondatra zibethicus*), and various rodents are known to occur in the Project vicinity. Typically, transportation corridors are purposely managed to be unattractive to larger terrestrial mammals to reduce wildlife/vehicle collisions. The study area is predominantly disturbed open ground with sparse vegetation surrounded by marginal to medium value upland habitat for terrestrial mammals.

Fish

Bullheads, crappies, perch, largemouth bass, smallmouth bass, and various trout species are found in nearshore sloughs, backwaters, and deep-water bays of LPO. The lake and tributaries provide habitat for kokanee, Gerrard rainbows, bull trout, and lake trout. Fish species found in Sand Creek include brook trout, sculpin, and sunfish (TerraGraphics 2006), as well as various other warm water species. Non-native fish species within LPO include rainbow trout, lake trout, brown trout, smallmount bass, walleye, yellow perch, black crappie, and others (Philips 2016). The fish species outlined in **Table 7** are based on the fish species observed by IDFG (2017a) and presented in 2017 data.

Table 7: Lake Pend Oreille Fish

Species	Species
bluegill/pumpkinseed/sunfish (*Lepomis spp*)	largemouth bass (*M. salmoides*)
brown trout (*Salmo trutta*)	northern pike (*Esox lucius*)
bull trout (*Salvelinus confluentus)*	walleye (*Sander vitreus*)
mountain whitefish (*Prosopium williamsoni*)	cutthroat trout (*Oncorhyncus clarki)*
bullhead catfish (*Ameiurus spp.)*	kokanee *(Oncorhynchus nerka)*
cutthroat trout (*Oncorhynchus clarki*)	lake trout (*Salvelinus namaycushi)*
crappie (*Pomoxis spp.)*	smallmouth bass (*Micropterus dolomieu)*
rainbow trout (*Oncorhynchus mykiss*)	yellow perch *(Perca flavescens)*
westslope cutthroat trout *(Oncorhynchus clarki lewis)*	longnose sucker (*Catostomus catastomus)*
peamouth (*Mylocheilus caurinus)*	Gerrard-strain rainbow trout (*Kamloops)*
pygmy whitefish (*Prosopium coulterii)*	largescale sucker (*Castomus clupeaformis)*

Preliminary Draft for Agency Review

Terrestrial Noise within the Study Area

Ambient noise levels in the study area are influenced by the local population level, traffic volumes on US 95, rail traffic, and commercial enterprises. The local population center is the City of Sandpoint. US 95 is located generally adjacent to the north end of the Project and diverges from the rail line near the north end of BNSF Bridge 3.9 to about 2,500 feet west of the south end of Bridge 3.9. The ambient noise level projected at 55 A-weighted decibels (dBA) is expected based on the local population. Peak rail noise levels are the whistles at 140 decibels (dB).

3.7.2 Environmental Consequences

No Action Alternative

Although substantially lower than the Proposed Action, impacts to wildlife and fish would continue to occur under the No Action Alternative due to the continued operation of the rail line and need for repair and maintenance activities on the existing bridges.

Proposed Action Alternative

Construction activities associated with this alternative would be expected to cause avoidance of the area by terrestrial species, both birds and mammals, for the duration of Project construction. However, the Project footprint is already within a high traffic transportation corridor, much of it disturbed and rock covered. Thus Project construction is not expected to create a major impact to or displacement of birds or mammals.

Birds

During portions of construction, such as pile driving, birds may alter flight patterns, or temporarily change foraging and habitat use within the Project area to avoid elevated noise levels. Long-term operation of the Proposed Action Alternative is not expected to alter flight patterns, foraging or habitat use, except in areas directly impacted by structures or vegetation removal. Since impacts to habitat preferred by IPaC species have not been identified, breeding and nesting impacts are not anticipated despite the species recorded present within the action area via the IPaC report.

Habitat conditions within and immediately adjacent to the BNSF ROW within the study area are degraded and are not considered high quality habitat, due to existing levels of development and associated transportation use. While the Project would require the removal of some large trees, bird nests have not been documented in the trees or vegetation that are scheduled for removal, and no direct impacts to nests or nesting migratory birds are anticipated. The Proposed Action Alternative would have no impact on the osprey pole located within BNSF ROW on the south side of existing Bridge 3.9. To ensure direct impacts are avoided, a migratory bird nesting survey would be conducted at the beginning of the season, within the study area, prior to ground-disturbing activities. If a nest is identified, a plan for impact minimization would be established with the necessary agencies.

In addition, it is not expected that construction or operational activities in the study area associated with the new bridge would rise to the level of prohibited conduct under the MBTA because no nests and/or communal roosts have been documented in the Project study area, surveys would occur prior to construction to verify and mitigate any potential impacts, and unlawful actions as defined in MBTA would not occur.

Preliminary Draft for Agency Review

Terrestrial Mammals

Terrestrial mammals present within the Project Action Area are primarily disturbance-tolerant. The project does not require any new mammal crossing in upland areas and increases in train traffic is not associated with the project; therefore, the project is not anticipated to result in any additional mammal fatalities. Due to the degraded condition of the transportation corridor, mammals are not expected to forage or inhabit proposed impact areas in large numbers; therefore, substantial terrestrial mammal impacts are not anticipated.

Fish

Pile driving will generate the highest sound above ambient noise levels. The pile driving proposed for the bridges has the potential for temporary impacts to all species, but in particular to fish species that may be present in the study area. Aquatic species response would be in part dependent on proximity to the piles being installed, individual's size (juvenile, subadult, adult), presence of a swim bladder, and activity (foraging, migrating, and overwintering [FMO]). The expected response for most fish species present in the work area would be avoidance of the general area. The availability of extensive alternate habitat in the Pend Oreille River and LPO would allow fish to widely disperse away from the aquatic impact zone. Injury or behavioral impacts, such as disruption of localized feeding opportunities or short-term migration, could occur to species that remain in the impact zone.

Most species of fish are susceptible to pile-driving impacts associated with underwater sound pressure waves, depending on the level. Underwater sound pressure waves can injure or even kill fish if they are close to the source due to barotrauma. Even in the absence of mortality, elevated noise levels can cause sublethal injuries. Fish suffering damage to hearing organs may suffer equilibrium problems and may have a reduced ability to detect predators and prey (Turnpenny et al. 1994; Hastings et al. 1996). Minimization measures such as initiating limited low impact strikes at the beginning of each work period to encourage fish dispersal, or the use of bubble curtains to attenuate sound, are common approaches that minimize the potential of fish injury and mortality. The ESA biological opinion will include minimization measures which would be required during Project construction. More detailed discussion related specifically to threatened bull trout is contained in Section 3.8 and in the Project Biological Assessment (BA) (**Appendix F**).

As described in Section 4.0, coordination with the USFWS and IDFG is ongoing. These efforts will result in the adoption of BMPs to avoid, minimize, and mitigate impacts to fish and wildlife during construction, such as the impact minimization measures described in Section 4.1, and the BMPs associated with the Project's SPCC plan and SWPPP described in Section 3.3.2. Additionally, adherence to conditions imposed in IDEQ's Section 401 WQC for the Project (IDEQ 2018a) would further avoid and minimize impacts to the aquatic environment.

Upon completion of construction, the Project would disturb approximately 3 acres of upland, riparian, and wetland vegetation and would result in an 2,036 square foot pile/pier footprint in-water, which is a relatively small operational footprint within the existing transportation corridor associated with the BNSF ROW.

Preliminary Draft for Agency Review

Noise Impacts within the Study Area

The Project action area, including terrestrial and aquatic zones of impact where wildlife species may be directly or indirectly affected by the proposed Project, is generally identified in **Figure 11**. In the way of distance, underwater noise is the farthest-reaching category of impact associated with the Project; therefore, the aquatic zone of impact was determined through the noise analysis presented in the Project BA (**Appendix F**).

Audible disturbances from construction activities will exceed ambient noise. As shown in **Table 3**, a projected maximum in-air noise level is associated with the impact hammer at 110 dB. The impact hammer produces noise levels at 110 dBA at 50 feet from the source. If two simultaneous pile drivers are utilized, 3 dBA has been added to the 110 dBA value resulting in 113 dBA as the highest noise level proposed during Project construction. These noise projection methods utilize WSDOT BA guidance (WSDOT 2018). Ambient noise within the study area includes vehicle traffic from US 95 and train traffic with peak noise levels of 140 dB, which represents a locomotive horn/whistle. Therefore, construction noise would not surpass noise levels which are regularly experienced in the area. Since construction noise (use of the impact hammer) would result in a more frequent noise elevation than train whistles, a terrestrial noise assessment has been conducted and is summarized in section 3.13.2.

Based on the data (WSDOT 2018), construction noise would reach ambient noise levels over open or hard terrain between 4.8 and 9.5 miles from the Project site. This is often referred to as the action area for in-air noise effects. The actual distance traveled by noise generated during construction before reaching ambient levels would be influenced by other variables not factored into the attenuation calculation, such as landforms, other roads, buildings, vegetation, and weather (wind/rain).

Turbidity within the Study Area

Temporary increases in turbidity during Bridge 3.9 construction would be controlled with a turbidity curtain. Shallow conditions may occur within Sand Creek and/or immediately adjacent to abutments, where turbidity curtains are not viable. Turbidity plumes are naturally restricted in shallow waters. Since turbidity impacts would be localized and contained to pile-driving activities, no substantial ecological impacts are expected (Section 3.3.2).

Due to the limited duration and spatial extent of construction activities, the Proposed Action Alternative is not expected to significantly impact fish and wildlife. ESA-listed species determinations are provided in Section 3.8 and the Project BA (**Appendix F**).

Preliminary Draft for Agency Review

Figure 11: Sandpoint Junction Connector Action Area

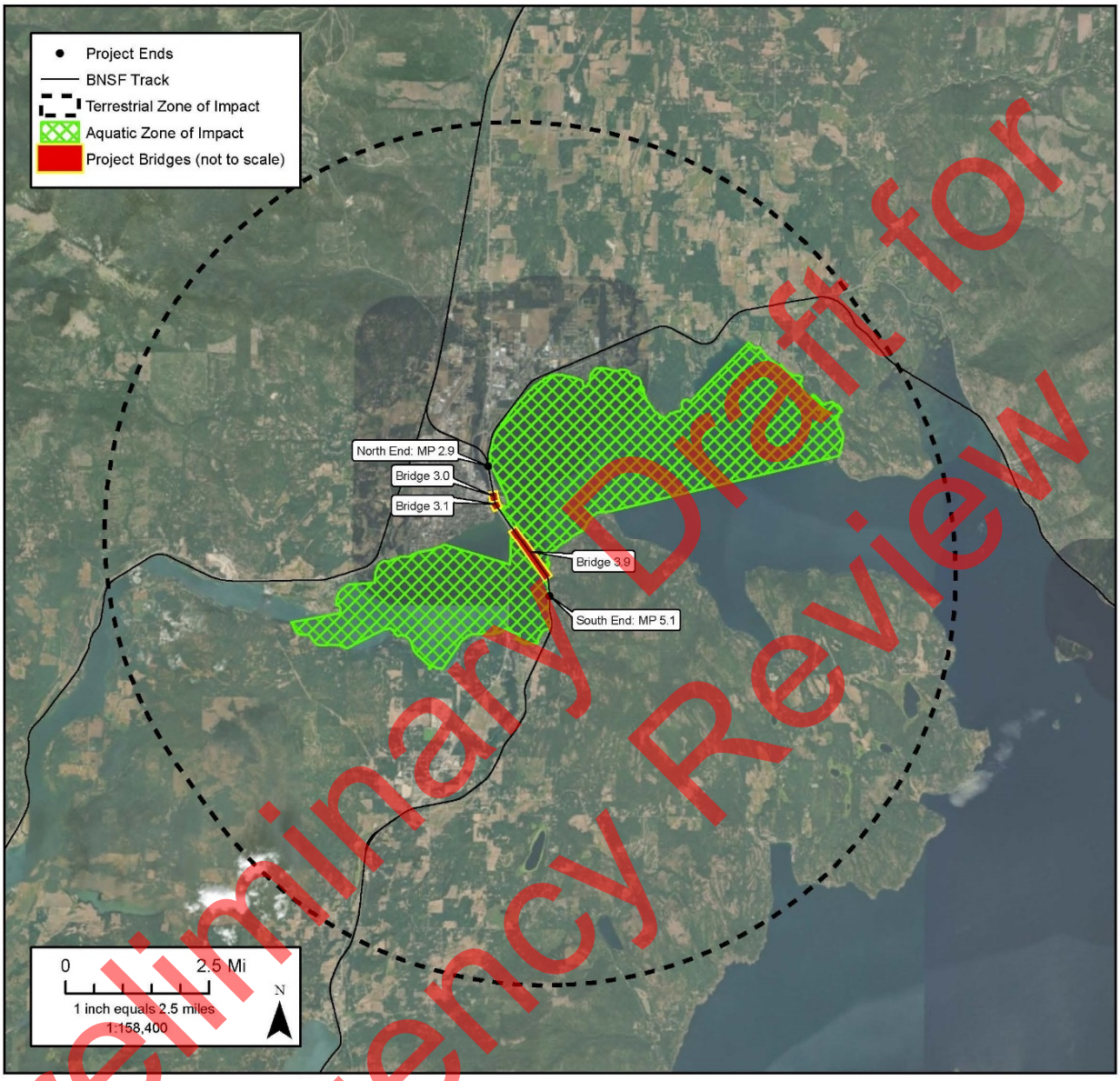

Preliminary Draft for Agency Review

Invasive Species

Numerous invasive species exist in Bonner County, as discussed under Section 3.7. Aquatic invasive species are a concern when working above, in, or near water. Invasive invertebrates can be spread by equipment. While no specific permit is required by a Project proponent or citizen related to actions undertaken in Idaho waterways, watercraft used during activities in Idaho waters must be licensed and permitted prior to launching (IDFG 2018; ISDA 2018). Only inflatable, nonmotorized vessels less than 10 feet long are exempt. All other watercraft must obtain the annual Invasive Species Boat stickers, in addition to other annual required boat registration fees.

To prevent the introduction or spread of invasive aquatic species, Project-specific watercraft inspection criteria and operating protocol have been developed (see impact minimization measures in Section 4.1). Boats, barges, and overwater machinery would be thoroughly inspected for invasive species and cleaned as required by the IDFG sticker program. The inspection and cleaning protocols will be implemented prior to any launch or access into LPO or Sand Creek (ISDA 2014). In addition, per the IDEQ WQC, the Project will be required to implement general condition 39: "Equipment and machinery used in or over water shall be stream cleaned of oils, grease and invasive species in an upland location or staging area with appropriate wastewater controls and treatment prior to entering on or over a water of the state. Any wastewater or wash water must not be allowed to enter a water of the state. Cleaning shall be adequate enough to remove all life states of aquatic invasive species." This protocol would be in effect during the entire Project. Through the use of BMPs, the Project is not anticipated to contribute to the introduction and spread of invasive species in the ecosystem.

3.8 Endangered Species Act Listed Species and Critical Habitat

The primary federal law protecting threatened and endangered species is the Endangered Species Act (ESA), 16 USC, Section 1531, et seq., and 50 Part 402. The ESA and its subsequent amendments provide for the conservation and recovery of endangered and threatened species and the ecosystems upon which they depend. Under Section 7 of the ESA, federal agencies are required to consult with USFWS and/or National Oceanic and Atmospheric Administration (NOAA) Fisheries to ensure that they are not undertaking, funding, permitting, or authorizing actions likely to jeopardize the continued existence of listed species or destroy or adversely modify designated critical habitat.

Critical habitat is defined as geographic locations essential for the conservation of threatened or endangered species. The outcome of consultation under Section 7 may include a Biological Opinion or a Letter of Concurrence. Section 3 of the ESA defines "take" as "harass, harm, pursue, hunt, shoot, wound, kill, trap, capture or collect or any attempt at such conduct."

3.8.1 Affected Environment

The Project alternatives reviewed are located across and along the northwestern edge of LPO and immediately east of, or near, US 95 and Sandpoint. Uplands in the action area are developed and consist of railroad tracks, gravel and paved parking areas, urban and urban fringe development, and highway/roadways. Other than for bull trout, the specific habitat conditions required for the federally listed ESA species noted in **Table 8**, as listed by USFWS in August of 2018, do not exist in the action area (Jacobs 2018e).

Preliminary Draft for Agency Review

Table 8: USFWS Listed and Proposed Species and Critical Habitat in Bonner County

Common Name	Scientific Name	Federal (USFWS Status)	Critical Habitat Designated	Potential to Occur in Action Area
Canada lynx	*Lynx canadensis*	Threatened	No	No
grizzly bear	*Ursus arctos horribilis*	Threatened	N/A	No
North American wolverine	*Gulo gulo luteus*	Proposed Threatened	No	No
woodland caribou	*Rangifer tarandus caribou*	Endangered	No	No
bull trout	***Salvelinus confluentus***	**Threatened**	**Yes**	**Yes**

Note:
USFWS = U.S. Fish and Wildlife Service

Bull Trout

Information in this section is summarized from the Project BA (**Appendix F**). The coterminous United States population of bull trout (Salvelinus confluentus) was listed by the USFWS as threatened in November 1999 (64 Federal Register [FR] 58910). Bull trout presently occur in approximately 45 percent of their estimated historical range within the Columbia River Basin and were listed due to declining trends in distribution and abundance caused by the combined effects of habitat degradation and fragmentation, blockage of migratory corridors, poor water quality, angler harvest and poaching, entrainment into diversion channels and dams, and introduced non-native fish species.

A 2007–2008 study noted that an estimated population of 12,513 bull trout in LPO was similar to that estimated one decade earlier in 1997–1998, indicating a stable population. It is suggested that a minimum of 10 local populations are required for a bull trout core area (metapopulation) to function effectively, and core areas with more than 10 interconnected local populations are at diminished risk of extirpation; the LPO core area has at least 20 local populations. It is also estimated that approximately 1,000 spawning adults within any bull trout population are necessary to ensure persistence of the population by maintaining genetic variation, and IDFG has determined that approximately 4,000 adult spawning bull trout occupy LPO at any given time.

Most bull trout are migratory and rear one to four years in natal tributaries before moving to larger rivers (fluvial) or lakes (adfluvial). Bull trout normally reach sexual maturity in 4 to 7 years and live up to 12 years. They spawn more than once in a lifetime, with both repeat- and alternate-year spawning reported. Therefore, bull trout require two-way passage upstream and downstream for repeat spawning and foraging. In Idaho, bull trout generally spawn in September and October. Fry normally emerge from early April through May depending upon water temperatures and increasing stream flows. Most downstream migrations for all size-classes of bull trout throughout the year are almost exclusively at night.

Adfluvial bull trout comprise the predominant life history form present in the LPO basin and are the predominant large-bodied native predator in the lake. Both the USFWS and the IDFG have confirmed that there is no documented presence of bull trout in Sand Creek, and data is minimal on bull trout use of LPO within the Project action area.

Preliminary Draft for Agency Review

Bull trout most likely use the LPO action area during migrating between spawning and rearing habitat and foraging, migration, and overwintering (FMO) habitat. Several radio-tagged bull trout have been documented at or near Bridge 3.9 throughout the winter.

There are two migratory periods for adult bull trout: migration out of LPO to upstream tributary spawning and rearing habitat in the spring and return to downstream LPO FMO habitat late in the fall after spawning. There is also a unique fall upstream migration of bull trout into LPO from the East River basin (a tributary to Priest River, which is a tributary to Pend Oreille River), presumably to allow bull trout to avoid swimming upstream into the lake against the Pend Oreille River current during spring high flows. Subadult bull trout do not migrate out of LPO until they reach sexual maturity, and therefore reside in LPO year-round.

There are no in-water work windows designated by the USFWS for LPO. In September 2010, the USFWS designated critical habitat for bull trout throughout their range that contains features considered essential for conservation of the species. Thirty-two Critical Habitat Units were designated, including Habitat Unit 31-Clark Fork River Basin that includes the open water and shorelines of LPO (including the LPO inlet/lower Sand Creek) and the Pend Oreille River within the Project action area. The Unit 31 critical habitat map is provided as **Figure 12** (75 FR 64067 [October 18, 2010]).

LPO is a complex core area within the Lower Clark Fork Geographic Region that is among the more secure and stable bull trout populations across the range of the species. It provides important bull trout FMO habitat for populations in local LPO, Pend Oreille River and Clark Fork River tributaries, as well as an essential migratory corridor for bull trout from LPO to access upstream productive tributary watersheds.

Because of its systematic and jurisdictional complexity, the LPO core area is further divided into three parts:

- (LPO-A) Clark Fork River mainstem upstream of Cabinet Gorge Dam on the Idaho/Montana border, almost entirely in Montana
- (LPO-B) LPO basin proper and its tributaries, extending from Cabinet Gorge Dam on the Clark Fork River downstream to LPO to Albeni Falls Dam on the Pend Oreille River, entirely in Idaho
- (LPO-C) the lower basin (lower Pend Oreille River) downstream of Albeni Falls Dam through the Box Canyon Dam to the Boundary Dam one mile upstream of the Canadian border, including portions of Idaho, Washington, and the Kalispel Indian Reservation

The Project lies wholly within LPO-B. LPO-B represents 15 percent of the LPO complex core area, covering 670,000 acres containing 1,250 miles of mapped streams.

ESA Consultation History

The USCG is the lead federal agency associated with this action and is undertaking formal consultation with the USFWS regarding potential effects to federally listed species and critical habitat. A draft BA was sent to USFWS for review on August 29, 2018. Previous coordination with USFWS to review impacts, methodology, and mitigation opportunities occurred in August, September, October, and November 2017 and June 2018, with meetings in March, May, and July 2018. If Section 7 consultation is not completed prior to EA publication, a Finding of No Significant Impact (FONSI) will be provided, if deemed appropriate.

Preliminary Draft for Agency Review

Figure 12: Critical Habitat for Bull Trout

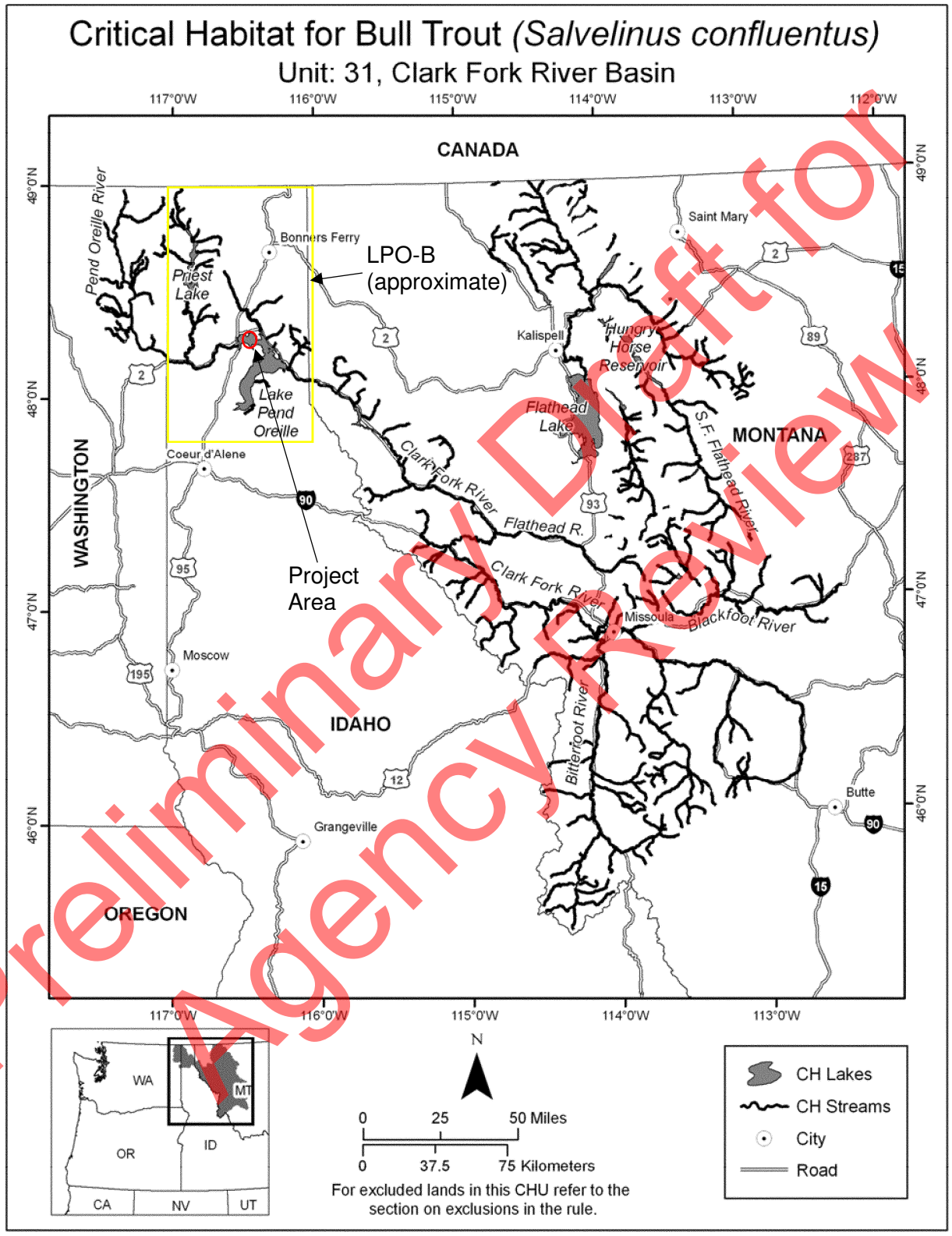

Preliminary Draft for Agency Review

3.8.2 Environmental Consequences

No Action Alternative

Implementation of maintenance actions on the existing Bridge 3.9 associated with the No Action Alternative could result in limited in-water work and therefore in a could result in impacts to listed species, but these impacts would likely be minor and are expected to be less than those described below for the Proposed Action Alternative. Without construction of a new bridge, ongoing maintenance actions on the current bridge would likely be necessary due to its age. Potential repair may require additional USFWS consultations. If future repair needs necessitates pile removal or driving, or other repair work that requires a Bridge Permit, the USCG would consult with USFWS as necessary.

Proposed Action Alternative

Information in this section is summarized from the Project BA (**Appendix F**). Bull trout would be the only ESA-listed species exposed to effects from the Proposed Action Alternative. Direct effects are those that occur at the time of the action and would be primarily associated with in-water noise from pile installation and potential localized increases in turbidity during pile installation and/or removal. Indirect effects are those that occur later in time and include changes to ecological systems resulting in long-term habitat alteration, changes in predator/prey relationships, or changes in land use.

<u>Direct Effects</u>

Permanent piles for the new bridges would be vibrated to resistance and finished with an impact hammer. Pile driving would occur during daylight working hours for an estimated 12 months for Bridge 3.9 and for approximately one month for Bridge 3.1, dependent on weather-related or other interruptions.

Vibratory hammers vibrate the pile into the sediment by use of an oscillating hammer placed on top of the pile. Vibratory driving sound pressure levels are generally 10 to 20 dB lower than impact hammer driving, with a much slower rise time. Due to reduced noise levels, vibratory driving of piles is generally considered less harmful to aquatic organisms and is the preferred method if geologic conditions allow.

However, piles must be seated to load-bearing capacity with the use of an impact hammer. This is referred to as proofing. This may take just a few strikes or many strikes depending on site-specific characteristics. In areas where geologic conditions preclude the driving of piles primarily with a vibratory hammer, piles would be driven with an impact hammer. Risk of injury or mortality to aquatic species resulting from in-water impact pile driving is related to the effects of rapid pressure changes, especially on gas-filled spaces in the fish's body (such as swim bladder, lungs, sinus cavities, etc.).

Noise generated by impact pile driving is impulsive, consisting of a broad range of frequencies over a short duration. Based on bull trout hearing ranges, threshold distances and noise levels (decibels or dB) that could result in injury or behavioral effects have been established by the USFWS and are used to calculate the spatial extent of potential impacts and to determine effects.

Preliminary Draft for Agency Review

Noise levels are analyzed based on peak dB, which describes the instantaneous peak sound pressure level and is used to evaluate potential injury to fish; root-mean-square, which describes the pressure level during the impulse and is used to describe disturbance-related effects (i.e., harassment and behavioral changes); and sound exposure level, which is used as an indication of the energy dose that can accumulate and result in injury.

NOAA Fisheries pile driving impact calculator was used to determine the distance that underwater sound would extend for the permanent bridges over LPO and Sand Creek, based on the type and largest size of piles to be driven with an impact hammer. The calculator utilizes the bull trout threshold distances and noise levels established by the USFWS.

In-water noise effects can be limited in spatial extent by sinuosity of the waterbody and once underwater sound reaches land. Effects can also be attenuated by using air bubble curtains during pile driving in water more than 3 feet deep. Because bubble curtains are not effective in shallow water, they would not be used at Sand Creek Bridge 3.1 since pile driving would occur in very shallow water during winter drawdown of LPO; however, they would be employed during impact pile driving for LPO Bridge 3.9.

Impact proofing steel piles in the construction of the new bridges would elevate sound pressure levels and potentially expose adult and subadult bull trout to harm, harassment, or behavioral changes. Based on the analysis presented in the Project BA (**Appendix F**), the furthest extent of the potential injury zone is approximately 0.46-mile from construction activity. This zone in total represents less than 1 percent of the available area within LPO and lower Sand Creek.

Because the construction contractor would have the option of installing piles simultaneously at each end of the bridge, bull trout may be exposed to increased cumulative energy where the individual pile driving noise zones overlap. When impact driving would occur simultaneously at two locations on the bridge alignment, there would be a moderate increase in the cumulative sound exposure level to bull trout.

Pile driving in Sand Creek (Bridge 3.1) would occur in low-water conditions during LPO winter drawdown. Water depths would be approximately 0 to 3 feet during work, with most piles driven outside of the winter-wetted channel of the creek. Most sound energy is not propagated in water depths of 1.3 feet or less, and energy propagation is substantially reduced in shallow water. Additionally, subadult or adult bull trout do not inhabit Sand Creek/LPO inlet and would not be present in shallow water when pile driving would take place. However, the action area for work within Sand Creek does extend into LPO, and any bull trout present in the lake may be exposed to slightly elevated sound pressure levels during impact pile driving.

The Proposed Action Alternative may result in short-term, temporary adverse impacts to individual subadult and adult bull trout that are exposed to elevated sound pressure levels from impact pile driving. (This only applies to bull trout that weigh two grams or greater since smaller bull trout remain in spawning and rearing tributaries and do not occupy LPO.) Using a bubble curtain to attenuate sound during Bridge 3.9 pile driving substantially minimizes the potential for bull trout exposure during pile driving. Additionally, reduction in the extent of effects during Bridge 3.1 pile driving into shallow water would be expected. A full noise assessment is provided in the Project BA (**Appendix F**).

Preliminary Draft for Agency Review

Though individual subadult and adult bull trout may be impacted by elevated sound pressure levels during construction, the relatively small zone of injury (less than 1 percent of LPO as a whole) when compared to available areas within the lake that are free of disturbance minimizes the potential for exposure. The bull trout population is relatively robust in the LPO area (approximately 12,000 fish) despite loss of connectivity to large areas of upstream and downstream spawning and rearing habitat.

Sediment on the bottom of LPO may be mobilized during Bridge 3.9 pile installation and temporary bridge pile removal. The potential effects are an increase in turbidity or possible mobilization of contaminated sediments if present. Pile installation, both either vibratory or impact methods, is not expected to mobilize sediment beyond the localized area of the pile. The extent of a turbidity plume is dependent on bathymetry, currents, total suspended solid background levels, and type of substrates. Data collected during pile driving in the Hudson River demonstrated increases in turbidity within 300 feet of pile driving actions (Federal Highway Administration [FHWA] 2012). Increases in turbidity within LPO are anticipated to be more confined due to milder currents. The area of effect would be localized, short-term, and relatively small compared to the area within LPO free of disturbance. Pile removal with a vibratory hammer and BMPs such as turbidity curtains would also be used where appropriate in conjunction with the driving of permanent piles and the removal of temporary piles to limit the extent of sedimentation. In shallow waters, with a depth of 3 feet or less, turbidity curtains are not viable. Few piles will be driven in waters 3 feet or less. These shallow conditions may occur within Sand Creek and/or immediately adjacent to abutments. Turbidity plumes are naturally restricted in shallow waters. A turbidity curtain can reduce turbidity levels by 80 or 90 percent in low energy environments (Dredge Operations and Environmental Research 2005).

Other direct effects, such as potential water contamination from construction equipment fluids, would be temporary in nature and would be insignificant relative to the overall area of bull trout dispersal in the lake and the extent of available habitat. The impacts would be minimized using construction BMPs identified in the SPCC plan and SWPPP (Section 4.0) and permit conditions identified in the 401 WQC.

Indirect Effects

Permanent indirect effects may occur to subadult bull trout after Bridge 3.9 construction due to the potential for increased predation associated with shading and additional underwater structures (piers) that provide predator hiding habitat. However, the area that would be shaded by the proposed Bridge 3.9 over LPO is very small compared to the total surface a Additionally, the new bridge would be elevated to nearly match the height of the existing bridge, allowing sunlight to penetrate for most of the day under both the existing and proposed bridges over LPO, and bull trout would be expected to inhabit the coldest and deepest part of LPO when shading would occur, and would forage the shoreline and shallow depths at night. rea of the lake (approximately 2 acres out of a total of 94,720 acres of LPO surface area). Because bull trout do not occupy Sand Creek due to degraded habitat conditions, no permanent indirect effects from increased predation due to shading or underwater structures would be expected. Therefore, significant alterations to predator/prey relationships associated with shading impacts are not anticipated, but alteration of these relationships may occur due to the increased number of underwater structures.

Other indirect effects, such as permanent alteration of nearshore habitat, are considered insignificant relative to the overall area of bull trout dispersal in the lake and the amount of available suitable habitat along the lake's 175 miles of shoreline. Nearshore fill would permanently alter 0.88 acres of habitat below the OHWM. However, due to the fluctuations in water levels, the

Preliminary Draft for Agency Review

nearshore impact area is low-quality habitat available for approximately 5 months. In addition, the new piles would permanently remove 2,036 square feet of lake bottom, and potentially displace benthic invertebrates as a prey item for bull trout. The study area is in the shallowest portion of LPO where waters are likely the warmest. The aquatic behavioral impact zone encompasses less than 8 percent of the total surface area of LPO. The Project also provides habitat improvement elements to offset impacts, which are discussed in Section 4.0.

The Project is not expected to contribute to or exacerbate the defined existing threats to the bull trout population in the LPO-B core area: (1) historic fragmentation due to dams on the lower Clark Fork River; (2) overfishing of bull trout and the presence of voracious non-native species, specifically lake trout; and (3) legacy impacts from upland/riparian land management practices.

Construction of the new bridges would require 288 permanent piles comprising 48 piers below the OHWM in LPO, and 22 permanent piles comprising 3 piers below the OHWM in Sand Creek. These piers would not significantly impact bull trout movements or migration in LPO, as piers would be approximately 65 to 93 feet apart, and the new bridge would be constructed immediately adjacent to the existing rail bridge. There would be fewer piers supporting the new Bridge 3.9 compared to the existing bridge, and the new bridge piers would align approximately with every other pier of the existing bridge.

Consultation with the USFWS regarding the Proposed Action Alternative, construction methods, Project timing, and impact minimization measures is ongoing, as noted in Section 3.8.1. Compensatory mitigation, provided in compliance with the CWA, for the 0.88-acre of nearshore/bull trout critical habitat fill is currently being discussed and is under review with agencies and Tribal natural resource departments. This CWA mitigation, further discussed in Section 4.0, would benefit bull trout habitat.

Based on bull trout utilization and suitable habitat within the action area, the BA determined that Project activities are likely to adversely affect individual adult and subadult threatened bull trout primarily due to pile driving during construction for the new Bridge 3.1 in Sand Creek and the new Bridge 3.9 in LPO. The BA determines that Project activities are likely to adversely affect bull trout-designated critical habitat in LPO and Sand Creek because of elevated sound pressure levels during construction. However, completion of the proposed action is unlikely to affect bull trout subpopulation indicators or critical habitat at the watershed or Columbia River Headwaters Recovery Unit scales, either temporarily or permanently. As part of the ESA Section 7 consultation that is being completed as part of the action, the USFWS would provide terms and conditions that are specific Project requirements to minimize effects to bull trout and bull trout critical habitat. These conditions would be implemented as part of the USCG Bridge Permit.

3.9 Archaeological and Historic Resources

The National Historic Preservation Act (NHPA) of 1966, as amended, sets forth national policy and procedures regarding historic properties, defined as districts, sites, buildings, structures, and objects included in or eligible for the National Register of Historic Places (NRHP).

Section 106 of NHPA requires federal agencies to consider the effects of their undertakings on such properties and to allow the Advisory Council on Historic Preservation (ACHP) the opportunity to comment on those undertakings, following regulations issued by the ACHP. As part of the Section 106 process, federal agencies must consult with the State Historic Preservation Office (SHPO) to assure that cultural resources are identified and to obtain the formal opinion of the SHPO on each site's significance and the impact of its action upon the site.

Preliminary Draft for Agency Review

3.9.1 Affected Environment

The Project vicinity was utilized by local Native American populations for hunting, fishing, and plant gathering, but the Area of Potential Effects (APE) has been drastically altered by railroad and highway development. Previous development included placement of thick fill deposits to support the existing railroad and bridge abutments; therefore, the APE contains reworked beach sands and disturbed fill sediments. Due to previous ground disturbance and fill used to construct berms on either approach to the bridge, the potential for intact archaeological deposits to exist within the APE is considered remote.

An evaluation of the archaeological and cultural resources was completed in the APE to identify resources and provide management recommendations regarding NHPA compliance (Jacobs 2018g).

Current and previous field assessments indicate that the APE does not contain any intact archaeological deposits near surface sediments. Previous cultural resource studies conducted within the APE are summarized in the Cultural Resources Technical Report (Jacobs 2018g) and include two on the north end of Bridge 3.9 (one for a BNSF bridge pier replacement project and one for the US 95 Byway) and two on the south end of Bridge 3.9 (both for BNSF projects).

As a result of those efforts, two archaeological sites (10BR38 and 10BR1026) were reassessed, one new archaeological site (temporarily named Rock Wall 1) was recorded, four previously recorded historic built resources (Northern Pacific Depot, Northern Pacific Railroad, Bridge 3.0, and Bridge 3.9) were revisited, and one additional potential historic built resource (Bridge 3.1) was identified. None of the field assessments indicate that the APE contains any intact archaeological deposits near surface sediments.

Two previously recorded archaeological sites exist within the APE. Site 10BR38 is a prehistoric campsite and associated rail line. Site 10BR1026 is a prehistoric campsite and historic scatter. Both sites are identified as contributing properties to the Upper Pend Oreille River Archaeological District, which has been determined eligible for the NRHP. During the 2018 assessment, it was determined that none of the previously recorded historic resources within the APE have changed substantially since recordation, and all continue to be recommended eligible for listing in the NRHP. In addition, there are the two newly recorded historic resources within the APE, BNSF Bridge 3.1 and Rock Wall 1. Both have been recommended not eligible for listing in the NRHP.

3.9.2 Environmental Consequences

No Action Alternative

The No Action Alternative would result in no ground disturbance activities, but maintenance activities would continue. Maintenance would consist of periodic inspections and ROW maintenance, with possible replacement of individual bridge components when maintenance is necessary.

A minimal amount of excavation is anticipated with these future maintenance actions; therefore, cultural resources would not likely be altered. If necessary, an inadvertent discovery plan (IDP) would be followed during ground-disturbing activities associated with maintenance actions to minimize potential impacts to archaeological deposits encountered during construction.

Preliminary Draft for Agency Review

Due to previous ground disturbance and fill used to construct berms on either approach to the bridge that was noted during the 2018 assessment, the potential for intact archaeological deposits to exist within the APE is considered remote; therefore, the No Action Alternative is unlikely to impact archaeological resources. Maintenance actions are not anticipated to require substantial alteration of historic resources; therefore, the No Action Alternative is unlikely to impact historic resources.

Proposed Action Alternative

To create the new bridge, the Proposed Action Alternative would add fill and drive permanent and temporary piles. The Proposed Action Alternative is a federal undertaking because the Project would require a USCG bridge permit and a USACE CWA Section 404 permit and is therefore subject to Section 106 of the NHPA presented in 36 CFR 800. Section 106 of the NHPA requires that, before beginning any undertaking, a federal agency must consider the effects of the undertaking on historic properties and afford the ACHP an opportunity to comment on these actions.

The Section 106 process includes the following steps:

a. Initiate the process
    - Establish undertaking
    - Identify other consulting parties and tribes
    - Coordinate with other reviews
    - Notify SHPO/Tribal Historic Preservation Officer (THPO)
b. Identify historic properties
    - Determine APE
    - Identify historic properties
    - Consult with SHPO/THPO, tribes and other consulting parties
c. Assess adverse effects
    - Apply criteria of adverse effects
    - Consult with SHPO/THPO, tribes and other consulting parties
d. Resolve adverse effects
    - Notify ACHP
    - Avoid, minimize or mitigate adverse effects
    - Consult with SHPO/THPO, tribes and other consulting parties

A summary of consultation and coordination completed with SHPO and Native American Tribes is provided in Section 5.1. The USCG initiated government-to-government Section 106 consultation with Native American Tribes on January 25, 2018, and will be ongoing throughout the EA process. Consultation with SHPO has been completed. SHPO concurrence with the “no effect” and “no adverse effect” findings and recommendations discussed below was provided on August 8, 2018 (**Appendix G**). Public involvement for the Proposed Action Alternative is being coordinated in compliance with environmental permitting and NEPA requirements.

Preliminary Draft for Agency Review

Archaeological Resources

It is highly unlikely that the Proposed Action Alternative would disturb intact archaeological resources that are listed or recommended to be eligible for NRHP due to a lack of intact archaeological resources near surface sediments within the APE. Intact deposits may be present outside the APE beyond the proposed impact of current construction plans.

For the Proposed Action Alternative, the Cultural Resources Technical Report provides a no effect recommendation for Site 10BR1026, where, aside from a single disturbed flake, historic artifacts were not identified within the APE. The report provides a no adverse effect recommendation for Site 10BR38, where materials are either buried under several feet of fill or no longer retain archaeological integrity. In addition, the portion of Site 10BR38 within the APE is not individually eligible for NRHP listing. Consequently, the Proposed Action Alternative will have no adverse effect to the Upper Pend Oreille River Archaeological District.

The identification of archaeological remains typically results in the halt of excavations. A Project-specific IDP would be utilized in the event that archaeological materials are discovered. The IDP would be prepared and provided to consulting parties and interested Tribes prior to construction. The IDP would identify the appropriate parties to be contacted and protocols to follow if cultural materials are exposed during construction.

The Cultural Resources Technical Report does not recommend additional archaeological evaluation or monitoring for the Proposed Action Alternative since no adverse effect and no effect determinations were recommended and concurred upon by the SHPO.

Historic Built Resources

For the Proposed Action Alternative, the Cultural Resources Technical Report provides a no adverse effect recommendation for the BNSF track, Bridge 3.0, and Bridge 3.9, as these structures would not be directly affected.

The report recommends ongoing monitoring and inspection of the BNSF-Amtrak (Northern Pacific) Depot building to ensure that the Project does not adversely affect the building. While changes to the surrounding visual environment may result in indirect impacts to the historic built environment, indirect effects on such resources during construction and operation would be negligible and are not anticipated to alter or diminish any aspect of the resources' integrity of location, design, materials, workmanship, setting, feeling, or association.

3.10 Environmental Justice

Executive Order 12898, Federal Actions to Address Environmental Justice in Minority Populations and Low-Income Populations, requires federal agencies to identify and address the disproportionately high and adverse human health or environmental effects of their actions on minority and low-income populations to the greatest extent practicable and permitted by law. The order directs each agency to develop a strategy for implementing environmental justice. The order is also intended to promote nondiscrimination in federal programs that affect human health and the environment, as well as provide minority and low-income communities access to public information and public participation.

Preliminary Draft for Agency Review

3.10.1 Affected Environment

The Project study area is located entirely within existing BNSF ROW within the incorporated limits of the City of Sandpoint and unincorporated Bonner County. The north end of the Project is located within City limits from BNSF MP 2.9 to 3.9, where the existing tracks are surrounded on the west by a BNSF maintenance road, the Sandpoint Train Depot and US 95 and on the east by Sandpoint Avenue, Seasons of Sandpoint Condominiums, Best Western Edgewater Resort, Sandpoint Edgewater RV Park, and a portion of the Sandpoint City Beach Marina. Within unincorporated Bonner County, BNSF Bridge 3.9 spans over the open water of LPO from MP 3.9 to 4.9. At the south end of the Project from BNSF MP 4.9 to 5.1, the site is designated as Rural (5) residential (Bonner County 2017).

The racial composition of the City of Sandpoint and Bonner County is primarily White, at 96 and 98 percent, respectively (U.S. Census Bureau 2012–2016). The largest minority group in the area is Hispanic and Latino, constituting 5 percent of the City population and 3 percent of the County population. The City of Sandpoint contains a higher proportion of residents living in poverty (22 percent) compared to Bonner County and the state of Idaho (15 percent).

3.10.2 Environmental Consequences

No Action Alternative

The No Action Alternative would result in no construction activity other than routine maintenance activities. Increased train delays waiting on regional sidings would have a minor impact on air quality, traffic noise, and traffic circulation. However, the impacts are expected to be the same across all population groups and would not result in disproportionately high and adverse impacts to low-income or minority populations.

Proposed Action Alternative

Construction activities under the Proposed Action Alternative would not result in the relocation of any businesses or residents. Some of the construction activities would be visible from Sandpoint. Construction noise, particularly pile driving at the Sand Creek Bridge (3.1) would be detectable along the eastern side of Sandpoint near US 95 but is anticipated to rapidly dissipate based on the presence of vegetation, structures, changes in topography, and ambient noise levels associated with local businesses and US 95. Noise impacts are expected to be the same across all population groups. No construction activity is currently proposed during nighttime hours. Elimination of the railroad bottleneck is expected to result in a minor long-term improvement in air quality, traffic noise, and local traffic circulation. These benefits would accrue to all residents, and this action would not result in disproportionately high and adverse impacts to minority or low-income populations.

3.11 Land Use and Recreation

This section contains a combined analysis of the potential effects of the Project on land use and recreation. These two resources are intertwined in the study area because most of the temporary construction-related activities and all permanent Project structures and long-term operations would occur within BNSF ROW. While BNSF holds ownership over the entire ROW and maintains sole control over what is allowed within the ROW, other uses occur and have become customary among the members of the public at certain limited locations within the ROW. Those other uses are predominately recreational.

Preliminary Draft for Agency Review

3.11.1 Affected Environment

The study area for this analysis consists of the BNSF ROW, LPO, Sand Creek, and Sandpoint Beach Park as a major recreational resource within sight of the study area. All but about 250 feet of temporary work bridge and a few square feet of temporary nearshore fill would be within existing BNSF ROW. A swath of land 400 feet wide, 200 feet on either side of the railroad, was transferred to the Northern Pacific Railroad and its successors (BNSF) by an act of Congress on July 2, 1864. The courts have held that the grant of land to a railroad is different than other land ownership transfers; the railroad performs a public service and is burdened with a public duty, which requires that the railroad have exclusive possession and dominion over its ROW (Lake CDA Investments LLC v. Idaho Department of Lands 2010).

Under Idaho's Lake Protection Act, the IDL regulates anything permanently fixed to lake beds or work that is done over lakes (Idaho Code Title 58, Chapter 13). The BNSF ROW extends across LPO with the right to conduct work to support the operation of the railroad. However, BNSF has worked cooperatively with IDL on past projects to obtain encroachment permits where its ROW crosses lakes. There are two other uses that legally occur in the BNSF ROW. A portion of the multiuse Serenity Lee Trail and a portion of US 95 enter the ROW.

LPO is a natural lake. Seasonal impoundment elevations have been managed by the USACE at Albeni Falls Dam since the dam was constructed in 1955. It is the largest natural lake in Idaho, with a surface area of 94,720 acres, a mean depth of 538 feet, and a maximum depth of 1,152 feet at its southern end.

Existing BNSF Bridge 3.9 crosses the northern end of the lake for almost a mile (4,769 feet) just south of Sandpoint. US 95 crosses the lake as two bridges (one vehicular, one multiuse and emergency access) for just over a mile (5,600 feet) south of Sandpoint. The highway bridges are west of BNSF Bridge 3.9 by approximately 0.7 mile. BNSF Bridge 3.1 crosses Sand Creek, which is considered part of LPO as the surface water elevations of Sand Creek for approximately two miles upstream from the bridge are also regulated by Albeni Falls Dam. Two US 95 bridges also cross Sand Creek near Bridge 3.1.

Vessel operation in LPO is primarily by motor vessels of varying size and human powered watercraft. Vessels operate near Bridge 3.1 and Bridge 3.9 year-round. However, the highest use period is typically from mid-May through mid-September with the highest use during that period occurring on weekends and summer holidays.

Sandpoint Beach Park is a City of Sandpoint park immediately northeast of the study area. It is a waterfront park with 6 acres of grassy lawn and sandy beach, swimming areas, a boat launch ramp, and an adjacent marina. Sandpoint Beach Park offers expansive views of Bridge 3.9. With its immediate proximity to downtown Sandpoint, it is a recreational focal point of the city and is heavily used, particularly in the summer season.

Although not explicitly allowed, other uses within the BNSF ROW have become customary at some limited locations. For example, there is an approximately 0.5-acre shoreline area that has become known locally as "Dog Beach" that is within the ROW and sees frequent dog walking.

Preliminary Draft for Agency Review

3.11.2 Environmental Consequences

No Action Alternative

Under the No Action Alternative, there would be no change in legal land use or recreational uses. BNSF would continue to maintain and operate the existing railroad and exercise access control over the land granted for railroad ROW. There could, however, potentially be a change in unsanctioned customary uses currently occurring within the ROW. As BNSF becomes aware of these uses, BNSF may work with the users to either find alternatives to continued use of the ROW or cooperatively come to agreement on some form of allowed use of the ROW through easement or other mechanism. BNSF may also request that these unsanctioned uses cease.

Proposed Action Alternative

Under the Proposed Action Alternative, there would be no change in legal land use within the BNSF ROW. As under the No Action Alternative, BNSF would continue to maintain and operate the existing railroad and exercise access control over the land granted for railroad ROW. There could, however, potentially be a change in unsanctioned customary uses currently occurring within the ROW. As BNSF becomes aware of these uses, BNSF may work with the users to either find alternatives to continued use of the ROW or cooperatively come to agreement on some form of allowed use through easement or other mechanism. BNSF may also request that these unsanctioned uses cease.

There would be temporary placement of approximately 250 feet of temporary work bridge and a few square feet of temporary nearshore fill outside the BNSF ROW associated with construction. IDL granted an encroachment permit to BNSF for the Project approving this use on June 21, 2018 (Permit No. L-96-S-0096E, **Appendix H**). This change would be temporary with these items being removed and the site restored once construction is complete. No indirect changes to surrounding land use would likely occur as a result of the Proposed Action Alternative.

The two legally allowed uses within the BNSF ROW would continue to remain. US 95 would continue to operate in its current configuration. BNSF also intends to work with Idaho Transportation Department (ITD) to keep the multiuse Serenity Lee Trail open during the entire Project and develop modifications to improve safety. There may be minor temporary degradation to recreational experiences along the trail during construction as the result of changes in visual aesthetics and increased noise levels, but no permanent effects are anticipated. User experiences may be similarly affected at Sandpoint Beach Park and the adjacent marina during construction where cranes and other construction equipment, particularly at Bridge 3.9, could be seen and construction noise would be noticeable.

Minor temporary changes to recreational navigation would occur under the Proposed Action Alternative during construction as temporary work bridges are put in place. USCG has broad legal authority to provide for safe vessel navigation on waters of the United States, including law enforcement authority and administration of bridges. Prior to the construction of the Proposed Action Alternative, the USCG would review potential temporary and permanent changes to navigation as part of the bridge permit process, including solicitation and consideration of public comments. In addition, IDL considered potential effects to navigation on LPO before issuing the encroachment permit. USCG would complete review of a Bridge Permit application.

Preliminary Draft for Agency Review

3.12 Visual Quality

This section discusses the visual changes that may be perceived by people viewing Bridge 3.0, Bridge 3.1, and Bridge 3.9 both during construction and over the life of the new bridges. The visual quality analysis for this Project was conducted in accordance with the USDOT's, *FHWA Guidelines for the Visual Impact Assessment of Highway Projects* (FHWA 2015). The full analysis and technical memorandum is included in **Appendix I**. While this Project is not subject to this policy, the guidelines provide a useful and widely accepted framework for analyzing visual impacts. Although visual quality is inherently subjective, the FHWA methodology provides definitions and a process for evaluating existing and proposed views. By following this process, the assessment is repeatable by other experts.

3.12.1 Affected Environment

The study area for the visual effects analysis is based on the area of potential visual effect, or viewshed, and key views that represent the different types of people that may view the study area. The viewshed is defined as areas with a line of sight (exclusive of vegetation) looking toward and away from the Project. Viewers of the Project can be described as either static or dynamic. Dynamic viewers are those moving through the study area, such as boats on LPO and Sand Creek and motorists on Bridge Street. Motor vehicle operators can be further divided into local homeowners or those who live in the area and frequent the viewshed, recreationalists, freight movers, and commuters. Static viewers include people viewing the new rail bridges from homes or businesses.

Views from Bridge 3.0 and Bridge 3.1 would be of short duration, while trains are moving, and any changes in Bridge 3.1 itself would not be highly visible from the train. Views from the Bridge 3.9 would be of longer duration, and the new parallel bridge would be visible as the train crosses LPO. However, these views would be of short duration, and LPO would be visible beyond the parallel track. Many trains using this route carry freight, and the engineers operating the trains are there for business; while they may enjoy the view, they are working and likely less sensitive to changes in the view because they understand the need for the additional structure.

Drivers on local roads are presumed to be less sensitive to the view of the bridges than recreational users who view the lake and rail bridges from the nearby roadside park, hotel, and marina. These viewers are presumed to be highly sensitive to changes in the view. To effectively analyze the visual impacts of the Project, key views were established to best represent the views of the above users. A map illustrating the location of the four key views and photographs of existing views from each are included in the visual analysis technical memorandum included in **Appendix I**. In considering light and glare, navigational lighting on Bridge 3.1 and Bridge 3.9 is the only light source currently in place on the bridges.

Preliminary Draft for Agency Review

3.12.2 Environmental Consequences

No Action Alternative

The no action alternative would not change the visual environment and, therefore, would result in no new visual impacts.

Proposed Action Alternative

During construction, there would be a temporary increase in signs in the work zone to alert people to submerged work-related items such as turbidity curtain cables, service boat anchor lines, and to show navigation channels during construction. For the duration of construction, this would be an active work zone, which may provide visual interest as well as encroachment on views of Sand Creek and LPO. Temporary work bridges would have navigation and moorage lighting as required by the USCG. These temporary changes in visual quality would not result in significant adverse impacts.

Visual simulations of each key view after construction of the Proposed Action Alternative are included in **Appendix I** and **Figures 4** through **7** of this EA. Assessed from Key View 1, the new Bridge 3.0 would have a wider opening to accommodate both the road and sidewalks on either side (**Figure 7**). The red beam over the roadway would continue the color theme used on the bridge supporting US 95. Large shrubs and trees would be removed as part of the Project so the vegetation rating would decrease slightly, but the rating for man-made structures would increase slightly because of the more open structure and the color tie-in with the nearby US 95 bridge over Bridge Street, resulting in an equivalent total visual quality rating.

Assessed from Key View 2, removal of the trees between the existing rail bridge and US 95 would lower vividness ratings for vegetation (**Figure 5**). The new Bridge 3.1 would be constructed between the existing rail bridge and US 95. The new bridge would continue the visual theme of the red beam over the channel that is proposed over Bridge Street. It would screen the older bridge from this view point. While the bridge would still be an encroachment on a lake view, the more unified design theme would raise the ratings for man-made elements, which would offset the decrease in the rating for vegetation.

Assessed from Key View 3, the trees in the center of the view would be removed and the new bridge would screen the old bridge from this view (**Figure 6**). The more unified design theme would raise the ratings for man-made elements, which would offset the decrease in the rating for vegetation.

Assessed from Key View 4, the trees in the middle ground view would be removed and the shoreline would be restored using native shrubs at the toe of the slope (**Figure 4**). The expansive views of the water and the tree-covered hills beyond would remain with Bridge 3.9 providing the only break in the visual unity of the scene. The total visual quality rating from this view under the Proposed Action Alternative would be slightly lower because of the removal of the trees in the middle ground, but the total visual quality rating would remain high.

Fixed navigational lighting, as required by the USCG and the IDL, would be installed on Bridge 3.1 and Bridge 3.9. This lighting would be comparable to the existing navigational lighting.

Preliminary Draft for Agency Review

3.13 Noise

The Noise Control Act of 1972 requires that activities of federal agencies, such as issuing permits, must be consistent with federal, state, interstate, and local requirements for the control and abatement of environmental noise. The primary responsibility of regulating noise is with state and local governments. In Idaho, noise abatement and control rests primarily with the local government. Bonner County has established regulations for control of noise in Title 9 "Special Environmental and Health" of its municipal code. Per code section 12, the County has adopted requirements that sources of industrial/commercial noise are designed and operated in a safe manner that minimize noise, smoke, dust, and other nuisance factors to nearby land uses. The City of Sandpoint's Noise Ordinance (Title 5, Chapter 2, Section 6) identifies a construction activity limit of no work after 10:00 p.m. and before 6:30 a.m. of any day of the week.

The Noise Control Act states that for "major noise sources in commerce," there must be "national uniformity of treatment." See 42 U.S.C. § 4901 (a)(2-3). The USEPA and the Secretary of Transportation were tasked with determining allowable noise levels for railroads, which they did. The Federal Railroad Administration (FRA) has issued regulations regarding noise limits for railroad equipment; under the Noise Control Act, no state or local ordinance can further limit noise from railroads. See 42 U.S.C. § 4916.

3.13.1 Affected Environment

Existing noise levels in the Project vicinity include train traffic, nearby vehicular traffic on local roads and US 95, boat traffic, and commercial and recreational activity from the adjacent land uses. Sensitive noise receptors in the Project vicinity include workers and residences/businesses in Sandpoint (e.g., Best Western Edgewater Resort, Seasons of Sandpoint Condominiums) and recreational users of Sandpoint City Beach Park, Serenity Lee Trail, and LPO.

Based on population alone, Sandpoint has an ambient noise level of approximately 55 dBA (WSDOT 2018) as it has between 3,000 and 10,000 people per square mile. US 95, which travels parallel to the study area, experiences approximately 2,000 vehicles per hour during peak traffic (ITD 2005) and has varying traffic speeds of between 45 and 55 miles per hour (mph) through the study area. A speed of 50 mph is used as an average. Per Table 7-3 of the WSDOT guidance (WSDOT 2018) the ambient traffic on US 95 produces noise levels of 72.8 dBA. The region also experiences traffic noise from U.S. Highway 2 and State Highway 200, which both run perpendicular to the study area.

3.13.2 Environmental Consequences

No Action Alternative

The No Action Alternative would result in no construction activity until maintenance is required to ensure that train traffic would be able to continually move through the site. However, increased train delays from trains waiting on regional sidings would continue to increase idling noise at locations where trains wait for clearance. Trains waiting for a crossing opportunity cause long vehicular wait time on local County and City streets at public at-grade rail crossings. As trains are continually delayed and commerce is interrupted, freight train use is expected to decline, and truck traffic is expected to increase. The increased delay in train and vehicle traffic and overall increase in truck traffic would increase traffic noise levels in the Project vicinity.

Preliminary Draft for Agency Review

Proposed Action Alternative

Elevated noise levels are anticipated during construction, especially during pile-driving activities. Potential impacts to fish and wildlife from construction noise is discussed in Section 3.7. During pile-driving activities, noise levels may reach up to 110 dBA; this noise level would be audible to nearby residents/businesses and recreational users. Construction noise would occur during daylight hours, equipment would be muffled, and peak noise levels from impact driving would be limited to regular work hours from 7 a.m. to 7 p.m. In the long term, elimination of the rail constraint is expected to result in a reduction in traffic noise levels as delay times are reduced and overall traffic circulation improves.

The impact hammer produces noise levels at 110 dBA at 50 feet from the source. If two simultaneous pile drivers are utilized, 3 dBA has been added to the 110 dBA value resulting in 113 dBA as the highest noise level proposed during Project construction. Ambient noise within the study area includes vehicle traffic from US 95 and train traffic with peak noise levels of 140 dB, which represents a locomotive horn/whistle. Therefore, construction noise would not surpass noise levels which are regularly experienced in the area. Since construction noise (use of the impact hammer) would result in a more frequent noise elevation than train whistles, a terrestrial noise assessment has been conducted.

Table 9 assesses how far the construction noise would travel before reaching ambient levels. Since the site is primarily surrounded by water, which is considered a "hard site" in regard to noise analysis, a doubling distance of -6.0 dBA is used. Using an ambient noise level of 55, construction noise would attenuate between 25,600 and 51,200 linear feet from the site, or between 4.8 and 9.5 miles. This assessment does not consider topography or vegetated landforms. When considering topography, the furthest distance construction noise is anticipated to travel is approximately 6 miles, which is the furthest open water distance between the study area and an elevated landform.

Table 9: Airborne Construction Noise Attenuation

Distance from Bridge (feet)	Construction Noise (Point source + hard site) (attenuation = -6 dBA)	US 95 Noise (Point source + hard site) (attenuation = -3 dBA)	Ambient Noise (dBA)
50	113 dBA	72.8 dBA	55
100	107 dBA	69.8 dBA	55
200	101 dBA	66.8 dBA	55
400	95 dBA	63.8 dBA	55
800	89 dBA	60.8 dBA	55
1,600	83 dBA	57.8 dBA	55
3,200	77 dBA	54.8 dBA	55
6,400	71 dBA	Below Ambient	55
12,800	65 dBA	-	55
25,600	59 dBM	-	55
51,200	53 dBM	-	55

Notes:
dBA = A-weighted decibel
dBM = decibels relative to one milliwatt

Preliminary Draft for Agency Review

3.14 Hazardous Materials and Wastes

Regulatory Background

Several federal laws, regulations, and executive orders relate to the control and handling of hazardous substances, cleanup of hazardous wastes releases, and public protection from harm resulting from these materials. These include the Comprehensive Environmental Response, Compensation, and Liability Act; the Resource Conservation and Recovery Act; the CWA and Oil Pollution Act of 1990; the Emergency Planning and Community Right to Know Act; the Toxic Substances Control Act; Executive Order 12088 – Federal Compliance with Pollution Control Standards; and Executive Order 12856 – Federal Compliance with Right-To-Know Laws and Pollution Prevention Requirements.

Under 49 U.S.C. § 11101, Common carrier transportation, service, and rates, railroads are required to provide transportation to all parties upon reasonable request, including for hazardous materials.

Emergency Planning Documents

USDOT requirements for prevention, containment, and response planning for transportation of oil by rail car are identified in 49 CFR Part 130, Oil Spill Prevention and Response Plans. Part 130.31 specifies that transport of oil requires preparation of a "current basic written plan" that is consistent with the requirements of the National Contingency Plan (NCP) and Area Contingency Plans, identifies the personnel and equipment necessary to remove a worst-case discharge and mitigate or prevent a substantial threat of such a discharge, and describes the training, equipment testing, drills, and response actions of facility personnel.

The NCP provides the authority for federal entities to respond to environmental emergencies as required by the Comprehensive Environmental Response, Compensation, and Liability Act and the Oil Pollution Act. The NCP established the National Response Team and 13 Regional Response Teams (RRTs) who are responsible for national and regional planning and preparedness activities. RRT membership consists of designated representatives from key federal response and support agencies together with affected states. Per Executive Order 12777, USEPA Region 10 is the regional federal planning lead for implementation of the NCP in the inland Pacific Northwest Region, including Idaho, and has response authority for incidents in all areas inland of the coastal zone (RRT/NWAC 2018).

As mandated by the NCP, the Region 10 RRT and the Northwest Area Committee (NWAC) form a consolidated body with jurisdiction over oil and hazardous materials response and planning efforts in Washington, Oregon, and Idaho. RRT and NWAC were created to protect public health and safety and the environment by providing requirements for coordinated, efficient, and effective support of the federal, state, tribal, local, and international responses to significant oil and hazardous substance incidents. RRT and NWAC meets and functions as a unified organization, henceforth referred to as NWAC. NWAC membership includes representatives from various federal, state, and local government agencies as well as Tribes, nongovernmental organizations, industry, and response contractors. Key NWAC members include USEPA Region 10, USCG District 13, IDEQ, Bonner County Office of Emergency Management (OEM), and local Idaho area Tribes. Participation in NWAC meetings includes tribal representatives, members of the public, and other members of the spill response community.

Preliminary Draft for Agency Review

The Northwest Area Contingency Plan (NWACP) is a regional plan required by the federal NCP. The purpose of the plan is to provide a playbook for oil and hazardous material responses in Washington, Oregon, and Idaho that involve state and federal agencies. NWAC directs development and maintenance of the NWACP, which is reviewed and updated annually (RRT/NWAC 2018). The NWAC Steering Committee solicits recommendations for revisions to the NWACP from workgroups, exercises/drills, training, and interested parties.

The NWAC, under the leadership of USEPA, is also responsible for developing GRPs in Idaho and engaging industry and community partners to support them. GRPs are site-specific plans that guide early actions where an oil or other hazardous materials spill occurs. GRPs serve as standard operating procedures and protocol tools useful for strategic planning purposes and guidelines for emergency response. The plans are tailored to a specific shoreline or waterway and are developed to minimize impact on sensitive areas threatened by the spill. GRP priorities include identifying sensitive natural, cultural, or significant economic resources and developing strategies to protect them. GRPs include pre-identified emergency notification information, boom deployment, and source control strategies for specific geographic locations. GRPs are intended to be living documents, subject to change as their response strategies are tested and new information is received.

The NWAC originally published a GRP addressing LPO in 2005 (RRT/NWAC 2005). No updates were made to the LPO GRP for the following decade. Having previously developed its own GRP for the LPO area, in 2014 BNSF met with multiple agencies in Sandpoint to improve upon the LPO GRP maintained by the NWAC. In 2015, field and resource-at-risk surveys were completed and updated, site-specific booming strategy lists were added. In 2016, the updated content was shared with the NWAC members. The NWAC evaluated this information and used it as the foundation for preparation of an updated "Lake Pend Oreille and Pend Oreille River GRP" (**Appendix J**). NWAC's LPO GRP dated June 2017 covers the study area and outlines resource-at-risk summaries and protective booming strategies within LPO.

The LPO GRP supplements other local emergency planning documents, in addition to the NWACP:

- The Idaho Emergency Operations Plan is an all-discipline, all-hazard plan that delineates line of authority and responsibilities of emergency action agencies.
- The Idaho Hazardous Materials/Weapons of Mass Destruction Incident Command and Response Support Plan supports the Emergency Operations Plan and NWACP and is the primary mechanism for initial response to hazardous materials incidents in Idaho.
- The Bonner County Emergency Operations Plan identifies the roles, responsibilities, and direction for Bonner County agencies and some volunteer organizations in responding to emergencies or disasters.

Preliminary Draft for Agency Review

Emergency Preparedness

The Resource Conservation and Recovery Act, Oil Pollution Act, and CWA contain provisions for assigning responsibility for potential oil spills. In recognizing the risk of a spill and its responsibility for preventing and responding to a spill, BNSF partners with NWAC members to assist with successful implementation of the NCP. BNSF's emergency preparedness program focuses on prevention, mitigation, and response, which addresses and upholds FEMA's National Preparedness Goal. This goal defines what it means to be prepared for all types of disasters and emergencies: "A secure and resilient nation with the capabilities required across the whole community to prevent, protect against, mitigate, respond to, and recover from the threats and hazards that pose the greatest risk" (FEMA 2015). The goal is capabilities-based and is organized into five mission areas:

- **Prevention**. Avoid, prevent or stop an imminent, threatened or actual act of terrorism.
- **Protection**. Protect our citizens, residents, visitors, and assets against the greatest threats and hazards in a manner that allows our interests, aspirations, and way of life to thrive.
- **Mitigation**. Reduce the loss of life and property by lessening the impact of future disasters.
- **Response**. Respond quickly to save lives, protect property and the environment, and meet basic human needs in the aftermath of an incident.
- **Recovery**. Assist communities affected by an incident to recover through a focus on the timely restoration, strengthening, and revitalization of infrastructure, housing and the economy, as well as the health, social, cultural, historic, and environmental fabric of communities affected by an incident.

As the potentially responsible party for a possible oil spill resulting from an accident involving one of its trains, BNSF recognizes the potential for serious environmental consequences of a spill. A summary of BNSF's efforts to implement each of the five mission areas is provided below. Specific efforts relevant to the study area are identified where applicable.

Prevention

A safe and secure railroad network is essential to the future of the nation. Railroads have some of the lowest injury and accident rates in the transportation industry and are continually improving. Since 1980, U.S. railroads have reduced rates for accidents by 79 percent (Association of American Railroads 2018).

BNSF's safety vision is to operate injury- and accident-free. BNSF has invested more than $60 billion since 2000 in infrastructure, equipment and technology, with an additional $3.4 billion planned in 2018. BNSF works toward preventing accidents in the following ways:

- **Rail defect detection**. FRA requires track inspections to be made under CFR 49 – Part 213 Section 213.233. Track Inspection frequency is based on class of track. BNSF's existing main line in the Project study area is considered "Class 3" main line track. Per 213.233 Class 3 track must be inspected "Weekly with at least 3 calendar days interval between inspections, or before use, if the track is used less than once a week. If the track carries passenger trains or more than 10 million gross tons of traffic during the preceding calendar year, inspections are required twice weekly with at least 1 calendar day interval between inspections." BNSF inspects the track in the study area at least twice a week in accordance with FRA requirements.

Preliminary Draft for Agency Review

- **Freight car defect detection**. BNSF utilizes a network of detectors to measure the conditions of each passing freight car to identify stresses on wheels and other equipment to prevent failures and protect structures and waterways.
- **Positive Train Control (PTC)**. PTC technology is a digital wireless system that uses global positioning data to monitor train movement, provide warnings to crews, enforce speed limits, and stop trains when certain unsafe conditions arise (such as a switch left in the wrong position). BNSF has completed installation of all federally mandated PTC infrastructure on its network and continues to test PTC technology.
- **Hazardous materials management**. Hazardous materials shipped on BNSF receive special identification and handling that include tracking all sensitive shipments, in-train placement checks, and emergency response information. BNSF also works closely with communities and response personnel to prepare for emergencies. In addition to employee and community training efforts summarized below, BNSF has a team of approximately 260 emergency responders from a variety of backgrounds, including environmental, safety and mechanical, as well as a network of contractors who are prepared to respond to an emergency.
- **Employee safety training**. BNSF invests in ongoing safety and technical training for its employees using a combination of field training, on-the-job training, long-distance learning, and technical training at a centralized training center. Employees are trained on exposure and risk identification as well as an array of technical rules and safety topics. Employees take courses and utilize simulation and lab tools that represent equipment, including locomotives, cranes and crossing gates. In 2017, BNSF trained more than 4,500 employees at its Technical Training Center and close to 20,000 employees in the field, as well as more than 500 other rail industry employees.
- **Community safety training**. In 2017, BNSF's environmental and hazardous materials teams trained more than 8,000 public emergency responders in communities across its network. BNSF sponsored and/or trained approximately 1,150 North Idaho first responders at the Security and Emergency Response Training Center in the past five years. BNSF, UPRR, and MRL participate and sponsor a regional oil spill technician fast water boom training in Alberton, Montana on the Upper Clark Fork River. The railroads and other oil industry partners also regularly attend and sponsor oil spill training with USEPA and the USCG at the Northwest Oil Spill School held annually in Port Angeles, WA. BNSF regularly participates in spill response exercises to bolster community safety training and emergency preparedness training.

Protection

BNSF implements its safety vision through safety programs, training, and technology as described in the Prevention, Mitigation, and Response mission areas. Several planning documents provide operational instructions for purposes of protecting BNSF employees and assets and the welfare of the general public. Section 33 of BNSF's System Special Instructions (August 1, 2018) provides instructions on what actions to take under excessive wind conditions, cold weather, or in the event of a tornado, flash flood, or earthquake. The BNSF Northwest Division Wild Fire Preparedness Plan (April 26, 2018) establishes a territory-specific process for effectively managing both predicted and emergency fire danger conditions on the Northwest and Montana Operating Divisions. The plan identifies procedures, priorities, and responsibilities for minimizing the impact of severe fire danger conditions.

Preliminary Draft for Agency Review

Mitigation

BNSF takes steps to reduce the severity and probability of an incident by developing and continually updating a variety of safe operating procedures, safety protocols, response plans and training programs, as discussed under the Prevention and Response mission areas. In addition to NWAC's LPO GRP and other area response plans, specific BNSF facilities and projects have industrial and specific project SWPPPs and SPCC plans developed and implemented to mitigate potential risks associated with hazardous materials releases on BNSF property.

BNSF also mitigates potential risk through compliance with several federal safety requirements for railroad operation. USDOT rules require customers to phase out old tank car technology (DOT-111 and CPC-1232 tank cars) by 2025. BNSF provides incentives for its customers to use best available technology and phase out the old tank cars, and as a result BNSF's customers are nearly 100 percent complete with the transition. FRA Emergency Order No. 30, issued on April 17, 2015 and made effective immediately, instituted a speed restriction of 40 mph for crude oil trains through "High Threat Urban Areas" to improve public safety. As an extra precaution, BNSF introduced self-imposed speed restriction of 35 mph for crude oil trains in areas with populations over 100,000.

Response

BNSF follows the accepted USCG and USEPA NCP practice where emergency response services and resources (equipment and personnel) are staged in regional areas or population centers within 6- and 12-hour response radii so they can be cascaded to incident locations by dedicated oil spill response organizations (OSROs) if an incident occurs.

BNSF works directly with the NWAC to develop, test, and continually improve emergency response plans and capabilities. BNSF, industry partners, OSROs, and key agencies regularly conduct oil spill training exercises and deploy and test LPO GRP booming strategies in LPO and the Clark Fork and Pend Oreille Rivers.

Since 2014, BNSF sponsored the following tabletop exercises and boom deployment training exercises to test the response strategies outlined in NWAC's LPO GRP:

- May 2015 LPO tabletop exercise
- August 2016 Clark Fork River boom deployment training
- September 2016 LPO tabletop exercise and Long Bridge and Dover boom deployment
- January 2017 Kootenai River deployment and oil-under-ice training
- September 2017 LPO tabletop exercise and Long Bridge and Fork River Bridge boom deployments
- September 2018 LPO tabletop exercise and October 2018 boom deployment exercise

These exercises were attended and observed by regional agency and community partners, including the USEPA, USCG, IDEQ, Bonner County OEM, Boundary County OEM, local fire and sheriff departments, Kootenai Tribe of Idaho, and OSROs. The September 2017 training exercise at LPO deployed 48 support personnel, 3,500 feet of boom, multiple drum skimmers, current buster, multiple watercraft, and drones overseen by a mobile command post. The exercise identified equipment and training vulnerabilities in the LPO GRP response strategies (**Appendix J**).

Preliminary Draft for Agency Review

To address the vulnerabilities identified in the LPO GRP during the September 2017 training exercise, BNSF completed the following:

- Inventoried available response equipment within the 2- and 6-hour response radii.
- Purchased and staged additional equipment in the response area including:
  - Over 8,000 feet of new boom and six trailers
  - Three additional skimmers and three storage tanks
  - Current Buster with 4,000 gallons of storage and hi-volume skimmer
  - An emergency response storage cache at Clark Fork on MRL property
  - A jet boat at the Clark Fork storage cache
- Sponsored trainings for local and regional OSROs and fire districts addressed in the GRP (largely staffed by volunteers and a smaller number of professionals) on a variety of emergency scenarios to improve their response capabilities.

BNSF is working with the NWAC to update the LPO GRP in response to the September 2017 training exercise. BNSF provided recommended revisions to the 2017 LPO GRP in late July 2018 for review and consideration by IDEQ and USEPA, members of the NWAC. IDEQ and USEPA will review the recommended 2017 LPO GRP revisions and, if appropriate, update and disseminate to the NWAC.

In response to the 2017 exercise, approximately 28,000 feet of boom is now available within a 2-hour travel time radius of Sandpoint. Boom, recovery, and storage equipment caches are located along the transportation corridors in four areas: Sandpoint Area Cache with approximately 10,800 feet of boom; Clark Fork Area Cache with approximately 5,100 feet of boom; the Bonners Ferry/Kootenai Area Cache with approximately 7,750 feet of boom; and the Regional Area Cache primarily from Spokane and Coeur d' Alene with approximately 5,200 feet of boom. A total of approximately 41,000 feet of boom is available within a 6-hour travel time radius of Sandpoint.

Boat access to LPO can be acquired from at least 35 boat ramps along LPO, the Clark Fork River, and the Pend Oreille River. Most of these boat ramps are unusable below a lake elevation of 2,056 feet, a level that can occur between mid-October and mid-May. Two boat ramps located at Priest River and Hope Basin offer reliable year-round response deployment; however, response time from those sites to an accident location may be complicated by wind, weather, and ice. Additionally, the shoreline area within BNSF ROW at the north end of Bridge 3.9 (the area commonly known as "Dog Beach") could be used to launch small boats during emergency events. Low water and no water access during low pool elevations, including access during winter months with icy conditions, may require air boat usage. BNSF and Bonner County OEM are planning to purchase air boats in 2019 that will be staged within the LPO region. During low pool elevations, equipment could also be delivered using high-flotation, wheeled vehicles; these air boats; and/or helicopters.

Vacuum trucks and frac tanks are not staged within the LPO region but would be mobilized from outside the area with the initial OSRO mobilization. Railroads maintain a fleet of tank cars staged in the region that carry wildland firefighting water, which could be emptied and used for recovered oil storage. Additionally, emergency response equipment trailers can be moved with standard 1-ton, load-rated pickups to the appropriate staging area, as demonstrated during recent training events.

Preliminary Draft for Agency Review

Recovery

BNSF has no record of hazardous material spills or incidents associated with bridges in the study area. In response to an emergency event, BNSF would implement the strategies contained in the LPO GRP to recover released material, minimizing potential damage. BNSF would then work with the appropriate regulatory agencies, property owners, and local community to restore residual damage that could not be avoided as the circumstances of the incident require.

3.14.1 Affected Environment

The Project site is an interstate main line rail corridor. Any railroad ROWs have the potential to contain contaminated materials from historic materials used, construction methods, and actions. The corridor where the Project is proposed does not have a recorded history of hazardous spills. Coal is not classified as a hazardous material for rail transport. Coal dust and incidental coal spillage has not been observed or documented in substantial levels within the study area uplands and research shows BNSF drive-through trains are not associated with substantial levels of coal dust (Missoulian 2012; Washington Research Council 2014; WDOE and Cowlitz County 2017). Coal dust and incidental coal spillage is not anticipated to be present in harmful levels within LPO sediments. Potential inadvertent and unrecorded releases could have occurred over the 120 or more years this corridor has had a railroad and associated support facilities on it, but typically such contaminated conditions in soils are shallow and localized. If contaminated soils are determined to be present, they would be removed and disposed of in commercially approved remediation facilities.

Application of herbicides along the railroad ROW to keep vegetation from growing over the tracks can also affect the reuse of the soil. BNSF policy for contaminated conditions is to identify, remove, and safely dispose of them when they are found. Any soil removed from any part of the ROW must be tested prior to it leaving BNSF property.

Regulatory Database Review

The online USEPA "Cleanups in My Community Map" and IDEQ "Waste Remediation Facility Mapper" were reviewed for sites within 1.0 mile of the Project work corridor. Contaminated sites that were separated from the Project work corridor by a waterbody (LPO and/or Sand Creek) or were located down- or cross-gradient to the BNSF ROW, were eliminated because it is unlikely contamination from these sites has migrated to the BNSF ROW. Based on this regulatory database review, five listed sites have the potential to impact the Project work corridor:

- Amtrak Sandpoint Station (Underground Storage Tank [UST] database)
- ITD Former Blacksmith Shop (General Remediation database)
- ITD Lakeside Hotel (General Remediation database)
- Sandpoint Byway (General Remediation database)
- Pend Oreille Bay Trail Zone 1 (Brownfields database)

All five sites are located on the peninsula of land directly east of Sand Creek and the City of Sandpoint. The following discussion of the listed sites is based on information and reports provided by Mr. Steve Gill from IDEQ on May 2 and 3, 2018.

Preliminary Draft for Agency Review

The Amtrak Sandpoint Station site was listed on the state UST database due to two USTs of unknown age that were closed in place in 1988. The tanks included one 500-gallon gasoline UST and one 200-gallon kerosene UST. The Amtrak Sandpoint Station site is not listed on the state Leaking UST database, and no documentation was found that indicates that a leak or spill occurred in association with this site.

The three general remediation database sites are associated with the Sandpoint Bypass west of the BNSF ROW. Arsenic, lead, and mercury contamination was found at a former blacksmith shop in 2006. Based on the No Further Action (NFA) letter from IDEQ, most contaminants have been removed from the site, and remaining concentrations are within normal background levels. A 2,300-gallon UST was discovered at the Lakeside Hotel site in 2007. The UST was a former boiler that had been used as a septic tank by the hotel.

Soils contaminated with polycyclic aromatic hydrocarbons (PAHs) and metals were excavated with the UST and removed from the site. Soil sampling conducted after the remediation activities indicated that only arsenic remained in soils above regulatory cleanup levels. However, IDEQ indicated that the arsenic concentrations were within normal background levels for the area and issued an NFA letter for the site in 2008. Soil samples collected and analyzed in 2009 during the Sandpoint Byway construction (Sandpoint Byway site) had concentrations of VOCs, PAHs, and metals below the regulatory cleanup levels. The site was issued an NFA in 2011.

The Pend Oreille Bay Trail Zone 1 site is associated with the former Humbird lumber mill and consists of five properties: two private parcels, two City of Sandpoint parcels (WTPs), and the BNSF ROW. Phase I and Phase II Environmental Site Assessments were conducted for the private/City of Sandpoint properties. PAHs and metals were found in site soils exceeding regulatory cleanup levels. Petroleum VOCs were also found but at concentrations below cleanup levels.

Based on risk evaluations conducted for the four parcels, an acceptable risk is associated with the detected contaminant concentrations for nonresidential and construction worker receptors. Because these parcels are used for recreation (Pend Oreille Bay Trail) and as a WTP (both nonresidential uses), no further cleanup was conducted. No investigation has been conducted on the BNSF ROW parcel. Based on contaminants found on the other four parcels, PAHs, metals, and petroleum VOCs have the potential to be present at the BNSF site at concentrations above regulatory cleanup levels.

Potential contaminants in lakebed sediments could include mercury (LPO and Sand Creek are listed as mercury-impaired), and arsenic, cadmium, copper, lead, and zinc primarily from legacy discharges from mining and smelting in the headwaters of Montana's Clark Fork River. The Clark Fork River contributes approximately 92 percent of the annual inflow to the lake and most of the annual suspended sediment load.

Concentrations of Clark Fork River bed-sediment metals decrease exponentially with distance downstream away from mining (Axtmann 1990 as cited in Jacobs 2018e). No sediment studies were conducted in the Project vicinity; however, a study done for the Clark Fork Delta restoration project (approximately 16 miles upstream of the Project) detected metal concentrations (cadmium, copper, mercury, and zinc) exceeding the USEPA's SEF Interim Freshwater SL1 Concentrations in 13 of 103 samples collected at 10 of 33 sampling locations; 8 of the 13 contaminated samples were at depths between 1.5 and 2.5 feet (GeoEngineers 2014 as cited in Jacobs 2018e).

Preliminary Draft for Agency Review

3.14.2 Environmental Consequences

No Action Alternative

Under the No Action Alternative, no change would occur to the sites identified by IDEQ, except for continued maintenance and repairs of the existing railroad tracks and bridges. These maintenance actions would require the use of construction equipment that contains petroleum products. LPO and Sand Creek are sensitive environmental receptors that could be impacted by spills associated with the use of petroleum products. As discussed in Section 3.3.2, BNSF would implement the LPO GRP to efficiently and safely respond, recovering a spill, and restoring damaged resources in the event of a spill.

BNSF would continue to follow bridge and track inspections and maintenance protocol. BNSF would continue to integrate the LPO GRP into staff and maintenance contractor hazardous material response training and planning.

Accident risk is a function of ton-miles of freight moved and number of rail miles travelled. The No Action Alternative would not increase the amount of freight moved or rail miles travelled and would, therefore, not increase the risk of accidents in the study area, although rail traffic in this corridor may be likely to increase as a result of population growth and the corresponding increase in the demand for freight and passenger transport. During a spill event within the existing corridor, BNSF would implement the LPO GRP, which provides a comprehensive approach to oil spill response for overwater structures in the region.

Proposed Action Alternative

The construction of the Proposed Action Alternative would require the use of construction equipment that contains petroleum products. BMPs for maintenance of construction equipment would be implemented to minimize the potential for the release of oil, fuel, or other contaminated materials into adjacent waters (Section 4.0).

The Proposed Action Alternative includes minimal clearing/grubbing activities and excavation to construct the new bridge abutments and the new grade for the second main line track (see Section 2.2). The potential for hazardous waste in the BNSF work corridor was identified as associated with the former Humbird lumber mill. Contamination from the lumber mill, if present, may be cleaned up faster to accommodate Project construction. The Project site is also a railroad corridor, with the potential to have shallow soil contamination associated with spills, leaks, creosote-treated railroad ties, and the use of herbicides. If contaminated soil is encountered during construction, the contaminated soil would be assessed, handled, stored, and disposed of in accordance with applicable state and federal regulations.

During the construction and maintenance of the Proposed Action Alternative, BNSF would continue to follow track and bridge inspections and maintenance protocol. BNSF would continue to incorporate the LPO GRP into staff and maintenance contractor hazardous material response training and planning. As indicated for the No Action Alternative, rail traffic in this corridor is likely to increase in response to market conditions and BNSF would use and follow the LPO GRP during a spill event.

The construction of the second main line track and associated bridges would not result in an increase in the amount of freight moved or the number of rail miles travelled but would result in more efficient and timely transport of freight and passenger rail traffic through this portion of the BNSF interstate main line, reducing the potential for conflicts associated with stopped or idling

Preliminary Draft for Agency Review

trains. In addition, some of the trains travelling through the study area would travel on new, modern, more reliable infrastructure requiring less maintenance. The Proposed Action Alternative would not increase the risk of spills within the study area.

3.15 Traffic

Local traffic includes surface vehicle traffic on state and local roadways and watercraft traffic that utilizes LPO and Sand Creek. The predominance of watercraft traffic is associated with recreation and fishing, both occurring primarily during the summer boating season from May 1 through October 15.

3.15.1 Affected Environment

The regional rail network in the Project vicinity is further described in Sections 1.1 and 1.2 and includes approximately 24 public at-grade vehicle crossings within 20 miles of the Project corridor. Vehicle traffic at some of these at-grade crossings such as Boyer Avenue, Great Northern Road, and Mountain View Road currently experiences long delays due to trains slowing or waiting to travel through the single track portion of the rail line through the study area. The study area is generally isolated from surface vehicle traffic since it is located along the edge of the existing rail line. Local traffic is limited to BNSF maintenance workers and contractors and private landowners that utilize a private at-grade crossing at BNSF MP 4.9. No local public access roads cross the tracks at grade within the Project limits. The existing tracks pass over Bridge Street in Sandpoint via BNSF Bridge 3.0.

With much of the study area consisting of bridges over navigable waters, traffic within the study also consists of recreational and commercial navigation. Recreational navigation within the study area is described in Section 3.11. Most of the limited commercial vessel traffic on LPO operates in support of recreational fishing and sightseeing excursions.

3.15.2 Environmental Consequences

No Action Alternative

Under the No Action Alternative, future increases in rail traffic through Sandpoint are likely to occur. Although the existing corridor has physical capacity to move more trains, additional train volumes at the bottleneck would increase congestion and delays throughout the corridor, and continue to cause delays for at-grade crossings in the greater Sandpoint area. While there are many reasons a train may block an at-grade crossing, a portion of these blockages in the region are related to scheduling travel through the single-track section of the rail line through the Project corridor. Delays at at-grade crossings due to trains waiting to travel through the Project corridor would be expected to increase as rail traffic increases, consistent with the current trend. Delays in freight and Amtrak service could result in increases in truck and vehicle traffic on local, regional, and national roads and interstate highways. Deteriorating rail service may cause shippers with alternative options, such as consumer products containers, to convert to highway transportation by truck. One double-stack intermodal train carries the same cargo as 280 trucks that would be diverted to publicly funded highways, producing negative highway congestion, economic, and safety impacts.

Preliminary Draft for Agency Review

Proposed Action Alternative

Detailed analysis in the Reasonable Needs of Navigation Analysis reports for both the LPO Bridge 3.9 and Sand Creek Bridge 3.1 (Jacobs 2018a and 2018d) specify design features incorporated to minimize impacts to vessel traffic under the Proposed Action Alternative. These features address navigation needs both during construction and after bridge completion. These measures are identified in Section 4.1.

It is anticipated that construction equipment and materials would be transported by truck, and potential impacts to local vehicle traffic could occur. The BNSF contractor would be required to develop a traffic control plan compliant with ITD, Bonner County Road and Bridge, and Sandpoint Police Traffic Safety rules and requirements. The traffic control plan would propose transport of unique Project materials during nonpeak use times (such as nighttime) on US 95 and other public roadways.

During construction of Bridge 3.0, temporary closures of Bridge Street may be required. If closures are required, the traffic control plan would include measures to minimize impacts to local homes and businesses that rely on Bridge Street as a primary access point. The traffic control plan would also identify emergency access routes, as needed. No permanent roadway closures are anticipated.

In the long term, train and truck circulation would benefit due to more rapid clearing of at-grade crossings and a more continuous flow of train traffic as a result of trains not having to wait at sidings for the single main line track constriction to clear. The Proposed Action Alternative would accommodate more freight traffic in this corridor without increased congestion and delays, which is expected to occur independent of this action as the population and use of freight rail increases.

3.16 Safety and Security

The Occupational Safety and Health Act (OSHA) was established to assure safe and healthful working conditions by providing workers a place of employment free from recognized hazards to safety and health, such as exposure to toxic chemicals, excessive noise levels, mechanical dangers, heat or cold stress, or unsanitary conditions. OSHA standards require that employers adopt certain practices, means, methods, or processes reasonably necessary and appropriate to protect covered workers on the job. In addition, even in situations where OSHA does not apply, the FRA has implemented safety regulations that apply to workers who work on railroad property (FRA 2010).

3.16.1 Affected Environment

U.S. railroads have some of the lowest injury and accident rates in the transportation industry. The accident rate is substantially lower than that for the trucking industry.

BNSF utilizes a combination of field training, on-the-job training, long-distance learning, and technical training at a centralized training center, as described in Section 3.14. Contractors and consultants are required to undertake contractor safety orientation training and railroad safety training prior to being allowed on railroad property prior to completing any work.

Workers that enter BNSF ROW must implement applicable OSHA and/or FRA requirements and be certified as having undertaken railroad safety and security training per FRA safety and security requirements.

Preliminary Draft for Agency Review

3.16.2 Environmental Consequences

No Action Alternative

As stated in Section 1.2, the current single main line track configuration of this section of the BNSF main line is causing freight and passenger rail traffic congestion throughout the region. Leaving the track configuration as it is, and conducting maintenance as needed, would not provide a reduction in rail traffic congestion or reduce hold times on regional sidings and wait times at grade crossings. Increased potential conflicts could arise with emergency services or first responders in the Project vicinity due to more frequently blocked public at-grade road crossings with the No Action Alternative. Contracted work activities associated with maintenance of the existing bridge would be covered under OSHA and/or FRA requirements.

Proposed Action Alternative

The Proposed Action Alternative would be designed to meet current design and rail traffic operations requirements and would increase safety and security of rail operations to help prevent possible future impacts to life or human health. Work activities associated with construction of the second main line track and new bridges would be covered under OSHA and/or FRA requirements. Implementation of the Proposed Action Alternative would result in multiple safety benefits for maintenance workers, train occupants, emergency response providers, and local drivers associated with reduced train and vehicle congestion and wait times at grade crossings.

3.17 Cumulative Impacts

Cumulative impacts are defined as "the impact on the environment which results from the incremental impact of an action when added to other past, present, and reasonably foreseeable future actions (RFFA) regardless of what agency (federal or nonfederal) or person undertakes such other actions" (40 CFR 1508.7). Cumulative impacts can result from individually minor actions that can collectively become a measurable impact when taking place over time.

The area around LPO and Sandpoint began to experience development in the 1880s as the Northern Pacific Railroad began construction on a rail line connecting the settlement that would become Sandpoint to Montana (City of Sandpoint 2018). Northern Pacific built the original railroad bridge across LPO in 1882. Timber along with some mineral extraction was the main industry in the area until the 1920s. As timber was cut, farming developed on cleared forest land, mainly supplying hay for livestock feed (City of Sandpoint 2018). The Farragut Naval Training Station was established in the 1940s at the southern end of LPO in Bayview, Idaho, bringing 300,000 servicemen to the area (City of Sandpoint 2018).

Albeni Falls Dam, on the Pend Oreille River at the Idaho/Washington border, was completed by the USACE in 1955 to generate hydroelectricity and control flooding. It permanently altered the area by maintaining a constant lake level, which, in turn, increased recreational boating opportunities (USACE 2018). The Noxon Rapids and Cabinet Gorge hydroelectric dams, upstream of LPO on the Clark Fork River near the Idaho/Montana border, were completed by the Washington Water Power Company (now Avista Corporation) in 1959 and 1952, respectively. The Schweitzer Basin ski area opened in 1963 and brought more tourism to the area (City of Sandpoint 2018).

Preliminary Draft for Agency Review

Today, several small towns surround LPO connected by a network of roads and bridges including BNSF Bridges 3.0, 3.1 and 3.9 and the US 95 "Long Bridge." Residential development and waterfront lodging surrounds the northern shores of the lake with many marinas and boat launches supporting the primarily recreational boating activity. Although the U.S. Navy still maintains an acoustical research detachment at Bayview, most of the Farragut Naval Training Station has been turned into a state park. U.S. Highway 2, State Highway 200, and US 95 are major highways in the area.

According to the U.S. Census Bureau (2018), Bonner County and the City of Sandpoint experienced a population growth of 6.6 percent and 12.5 percent, respectively, between April 2010 and July 2017. It is reasonable to assume the region will continue with a similar growth pattern over the next decade.

There are a few RFFAs that are anticipated to occur in the Sandpoint and LPO area. The ITD and Bonner County do not have any permitted or funded projects beyond routine maintenance activities scheduled for the area.

Relevant RFFAs are listed below.

- City of Sandpoint:
  - North Ella Avenue Improvements (summer 2018):
    - Work involves asphalt removal and replacement, improved stormwater management, Americans with Disabilities Act ramp installation at intersections, and tree and shrub trimming as needed to improve the line of sight along North Ella Avenue, from Chestnut Street south to Pine Street.
  - Oak Street Bike Path, Sidewalk, and Utilities (summer 2018):
    - Add new sidewalks along Oak Street between 5th Avenue and Boyer wherever existing sidewalks do not meet current standards.
    - Add bike paths along both sides of Oak Street from Boyer to the Community Trail.
    - Includes new curbs, driveways, and utilities, and refreshed striping and signage in conjunction with other work.
  - Downtown Revitalization:
    - Replaces and adds new sidewalks, landscaping, irrigation, benches, stormwater features, bike racks, lighting, roadway, striping, signage, and other features along Cedar Street between 2nd Avenue and 5th Avenue (summer 2018).
    - Similar improvements along 1st Avenue (2019).
  - Sewer main and associated laterals replacement Along First Avenue, north of Church (fall 2018).

- USACE Albeni Falls Dam Fish Passage Project (Pend Oreille River):
  - Would allow bull trout that currently migrate downstream of Albeni Falls Dam to get back upstream to access LPO FMO habitat.
  - Would increase number of bull trout migrating from the Pend Oreille River to LPO and restore connectivity in the LPO bull trout core recovery area.
  - Earliest construction anticipated in 2022.

Preliminary Draft for Agency Review

- Pend Oreille County Public Utility District Box Canyon Fish Passage Project (Pend Oreille River):
  - Would facilitate upstream passage of fish greater than 4 inches (Albeni Falls is the next upstream dam).
  - Ongoing construction to be complete in July 2018.
- Avista Cabinet Gorge Dam Fish Passage Facility (Clark Fork River):
  - Would construct a new facility to transport native migratory salmonids, with a focus on upstream transport of bull trout to tributaries in Montana to restore connectivity in the LPO bull trout core recovery area.
  - Construction to begin in fall 2018.
- IDFG/Avista ongoing LPO lake trout suppression efforts:
  - Uses gillnets to capture both adult and juvenile lake trout, a non-native competitor species to bull trout.

In addition to the RFFAs listed above, it is logical to assume that rail traffic may increase at some point in the future as the U.S. population continues to grow and demand for the movement of goods on land, on water and by air continues to grow. However, there are no proposed freight origin or destination facilities related to the Project or anticipated to be initiated due to this Project.

3.17.1 Environmental Consequences

No Action Alternative

The No Action Alternative would have no measurable direct or indirect effects with respect to the following resources:

- Geology, Soils, and Topography
- Wetlands
- Floodplains
- Archaeological and Historic Resources

Ongoing maintenance and operation of the existing rail infrastructure and continued locomotive emissions during long periods of idling and related powering up to resume travel, would contribute toward a cumulative decline in ambient air quality in the area. However, given the trend of air quality improvement following the implementation of IDEQ's 2011 Limited Maintenance Plan, which addressed residential wood combustion, fugitive road dust, and industrial emissions, and the general improvements in efficiency of newer locomotive engines, these contributions to air quality would not be consequential.

Air emissions from the combustion of fuels at multiple and dispersed sources can cumulatively affect water quality through atmospheric deposition. Atmospheric deposition occurs when air pollutants fall to the ground or into a waterbody as either dry particles or gasses. These pollutants can then either directly affect water quality if deposited directly into water or enter a waterbody through surface runoff or by moving through soil. These effects may occur great distances from the emissions sources depending on weather patterns dispersing emissions. Contributions to

Preliminary Draft for Agency Review

cumulative effects on water quality through atmospheric deposition of locomotive air emissions would be directly related to the effect of these emissions on air quality. For the reasons stated above regarding contributions to ambient air quality, the contributions of air emissions to water quality would not be consequential under the No Action Alternative.

No change in the frequency or intensity of railroad inspection and maintenance activities would be anticipated. Therefore, no change in contribution to cumulative impacts would be expected from the baseline condition and any impacts to the following resources would not be significant.

- Water Resources and Water Quality
- Vegetation
- Fish and Wildlife
- ESA-Listed Species and Critical Habitat
- Hazardous Materials and Wastes
- Land Use and Recreation

The existing bridge has physical capacity to move more trains, but with additional train volumes, congestion and delays would increase, thereby negatively impacting North Idaho communities and communities throughout the BNSF network. Deteriorating rail service may cause shippers to use alternative options, such as intermodal container transport of consumer products, to convert to highway transportation by truck.

One double-stack, intermodal train carries the same amount of freight as 280 semitrucks that would be diverted onto publicly funded highways, producing negative highway congestion, economic, and safety impacts. However, given the limited number and type of RFFAs identified, and the minor direct and indirect contributions of this no-action alternative, cumulative increases to noise, traffic, and safety and security would be minor.

Proposed Action Alternative

There would be no direct or indirect effects to land use; therefore, there would be no contribution to cumulative effects under the Proposed Action Alternative.

While the temporary negative effects of the Proposed Action Alternative with respect to air quality, noise, traffic, and safety and security may overlap and combine with effects to those resources from other RFFAs, potential contributions from the Proposed Action Alternative would be minor and the related RFFAs are relatively small actions. Cumulative negative effects to these resources would not be consequential and would be temporary during construction. However, the long-term effects of the Proposed Action Alternative to these resources, including potential effects of atmospheric deposition of air emissions on water quality as discussed under the No Action Alternative, would be beneficial as a result of reduced locomotive idling and powering up to resume travel and reduced vehicle idling due to delays at regional and local, at-grade railroad crossings.

Preliminary Draft for Agency Review

The direct and indirect effects of the Proposed Action Alternative to geology and soils, water resources and water quality, floodplains, vegetation, archaeological and historic resources, visual quality, and hazardous materials and wastes are minor and would be of a very limited geographic scale and magnitude. When considered with the other small and scattered RFFAs, and conditions imposed by the Section 401 WQC, they would not contribute to cumulative impacts.

The direct and indirect effects to wetlands would be relatively small at 0.28 acre. The disturbance to this wetland acreage would comply with the CWA through purchase of mitigation bank credits from the Valencia Wetland Mitigation Bank/Valencia Wetlands Trust. The direct and indirect effects to fish and wildlife and ESA-listed species and critical habitat would be largely short-term and the Project would adhere to USFWS stipulations and permit conditions resulting from Section 7 ESA formal consultation and Biological Opinion. The impacts associated with nearshore fill would be mitigated through a strategy developed through ongoing work of a collaborative group of agencies, Tribes, and LPO and Sand Creek stakeholders as discussed in Section 4.0.

Residual impacts to bull trout as an ESA-listed species would be minor as part of a short-term adverse effect and would not contribute toward significant cumulative impacts when considered with the other RFFAs, particularly given that four RFFAs are projects specifically designed to benefit bull trout. The direct and indirect effects to navigation and recreation under the Proposed Action Alternative would be minor and the identified RFFAs are relatively small widely dispersed actions. Therefore, there would be no measurable contribution towards cumulative impacts to navigation or recreation under the Proposed Action Alternative.

3.18 Comparative Analysis of the No Action and Proposed Action Alternatives

The following section compares the potential environmental effects of the No Action Alternative and the Proposed Action Alternative. The purpose of this section is to allow a quick comparison of the differences in potential effects of the two alternatives. **Table 10** summarizes the potential direct, indirect and cumulative environmental effects of each alternative as detailed in Section 3.0 by resource area. Potential effects in all resource areas would not be significant and would be mitigated based on federal and applicable state and local standards. Neither alternative would contribute significantly to cumulative impacts.

Preliminary Draft for Agency Review

Table 10: Comparison of Potential Environmental Effects of Alternatives

Resource Area	No Action Alternative	Proposed Action Alternative
Air Quality	• Temporary localized increases in some criteria pollutants would result from ongoing maintenance and operation of the existing infrastructure. • Continued locomotive emissions during long periods of idling and related powering up to resume travel.	• Temporary localized increases in some criteria pollutants would result from construction, maintenance, and operation of the new and existing infrastructure. • Locomotive emissions associated with periods of idling and related powering up to resume travel would be reduced or eliminated resulting in improved air quality.
Geology, Soils, and Topography	• No effect.	• Removal of portions of small bedrock outcrops. • Excavation of approximately 100 yd^3 of upland soils. • Temporary displacement of approximately 2,000 ft^2 of submerged substrate for temporary piling.
Water Resources and Water Quality	• No change to current level of risk of spills related to maintenance and operation of existing infrastructure.	• Temporary construction-related sedimentation and risk of petroleum and/or concrete spills. • Slightly increased long-term risk of construction-related spills from additional maintenance of new infrastructure. • 0.88 acre of nearshore fill.
Wetlands	• No effect.	• 0.28 acre of wetland fill.
Floodplains	• No effect.	• 1,500 yd^3 of permanent fill in the 100-year floodplain. • 800 yd^3 of temporary fill in the 100-year floodplain. • 950 steel piles permanently placed in Sand Creek and LPO.
Vegetation	• Minor maintenance removal of some trees as necessary to protect existing infrastructure (less than 3 acres of vegetation removal).	• Removal of approximately 3 acres of riparian vegetation; wetland vegetation; and upland trees, shrubs, and grasses. • Minor risk of transport of upland and/or aquatic invasive species during construction.
Fish and Wildlife	• Minor effects associated with continued maintenance and operation of existing infrastructure.	• Temporary avoidance of the study area by birds and mammals during construction. • Temporary avoidance of in-water pile driving activity by fish during construction. • Potential injury and/or mortality of some fish during pile driving even with the implementation of BMPs.

Preliminary Draft for Agency Review

Table 10: Comparison of Potential Environmental Effects of Alternatives (continued)

Resource Area	No Action Alternative	Proposed Action Alternative
Endangered Species Act Listed Species and Critical Habitat	• Minor short-term effects related to maintenance activities.	• Temporary effects to bull trout due to in-water pile driving noise during construction. • Long-term potential for increased predation of bull trout related to hiding habitat associated with new in-water structures. • Likely to adversely affect bull trout[(1)] • Not likely to adversely affect bull trout critical habitat[(1)]
Archaeological and Historic Resources	• No effect.	• No effect on archaeological resources. • Temporary indirect visual effect on historic structures during construction.
Environmental Justice	• Minor long-term impacts on air quality, traffic noise, and traffic circulation. • No disproportionately high and adverse impacts.	• Temporary construction-related impacts to air quality, noise, and traffic circulation. • Long-term improvement in air quality, traffic noise, and traffic circulation. • No disproportionately high and adverse impacts.
Land Use and Recreation	• No effect	• No change in land use. • Temporary placement of 250 feet of work bridge and a few square feet of temporary fill outside BNSF ROW. • Minor temporary visual aesthetic and noise effects on recreational users of the multiuse Serenity Lee Trail and Sandpoint Beach Park and adjacent marina.
Visual Quality	• No effect.	• Temporary encroachment on views of Sand Creek and LPO during construction. • Minor long-term changes to visual quality as a result of construction new Bridge 3.1 and new Bridge 3.9.
Noise	• Minor increases in truck traffic noise due to anticipated reduction in rail transport resulting from continued and increased rail delays.	• Temporary increases in daytime noise levels during construction. • Long-term reduction in rail and roadway traffic noise due to reduced delays at at-grade crossings.
Hazardous Materials and Wastes	• Minor risk of petroleum spills during routine maintenance of existing infrastructure.	• Minor risk of petroleum and/or concrete spills during routine maintenance of existing infrastructure and/or new construction. • Potential to encounter contaminated soil during construction associated with the former Humbird Lumber Mill or other historic spills or leaks, creosote-treated railroad ties, or herbicide use within BNSF ROW.

Preliminary Draft for Agency Review

Table 10: Comparison of Potential Environmental Effects of Alternatives (continued)

Resource Area	No Action Alternative	Proposed Action Alternative
Traffic	• Continued and increased delays for rail and roadway traffic. • Increased truck and passenger vehicle traffic on roadways resulting from anticipated decreases in freight and passenger rail demand due to continued and increased rail delays.	• Temporary increased truck traffic during construction. • Potential temporary closures of Bridge Street during construction. • Reduced delays at at-grade crossings.
Safety and Security	• Continued and increased emergency service response times due to delays at at-grade rail crossings.	• Reduced emergency service response times associated with reduced delays at at-grade rail crossings.

Notes:
BMP= best management practice
cy^3 = cubic yard
ft^2 = square foot
LPO = Lake Pend Oreille
ROW = right-of-way
(1)Proposed Endangered Species Act effect determinations; subject to U.S. Fish and Wildlife Service concurrence.

3.19 Statement of Environmental Significance of Proposed Action Alternative

As discussed in detail throughout Section 3.0 and summarized in Section 3.18, the potential environmental effects of implementing either the No Action or the Proposed Action Alternative would not result in any significant direct, indirect or cumulative environmental impacts. Therefore, preparation of an EIS is not warranted and preparation of a Finding of No Significant Impact would be appropriate.

Preliminary Draft for Agency Review

4.0 MITIGATION

BNSF is coordinating with federal, state, and local agencies with jurisdiction over the Project and interested Tribes to develop appropriate mitigation measures to minimize potential environmental effects (see Section 5.0 for additional detail). Avoidance and minimization measures associated with the Proposed Action Alternative are identified in Section 4.1 and compensatory mitigation measures associated with the Proposed Action Alternative are identified in Section 4.2.

4.1 Avoidance and Minimization

Water Resources and Water Quality/Wetlands/Fish and Wildlife/Threatened and Endangered Species

As summarized in the Alternatives Analysis (Jacobs 2018c) completed for the Project to comply with Section 404 of the CWA, the design of the new bridges over LPO and Sand Creek were modified to reduce the area of temporary and permanent nearshore fill by over 2 acres.

The following minimization measures have also been established for this Project to further avoid or minimize potential impacts to water resources, water quality, and fish and wildlife, including threatened and endangered species:

- Protection of Existing Vegetation: Specific limits of activities and disturbance areas would be clearly marked with high-visibility construction fence for reference by construction work crews and machinery operators.
- All in-water work would comply with the approved permit conditions for LPO and Sand Creek.
- Implementation of 401 WQC Conditions 1 through 34 to ensure compliance with Idaho water quality standards (IDEQ 2018a).
- Temporary in-water steel piles would be installed with a vibratory driver to resistance for the permanent bridges and to refusal for the temporary work bridges.
- Where practical, air bubble curtains would be used to attenuate sound, and turbidity curtains would be utilized to contain and settle sediments, when impact driving the 36-inch-diameter piles at Bridge 3.9.
- Dispersal strikes would be utilized when an impact hammer is used to install permanent in-water piles to minimize the potential for fish to be near when production pile driving occurs.
- A Temporary Erosion and Sediment Control Plan and BMPs would be installed to reduce erosion from exposed soils and maintained throughout the Project construction to ensure effectiveness.
- The contractor would install and maintain BMPs to keep construction debris from entering waters of the United States.
- An SWPPP would be implemented as part of the NPDES Permit.

Preliminary Draft for Agency Review

- To help prevent the spread of invasive species, equipment would be cleaned to the greatest extent practical prior to arriving to and immediately after leaving the Project site. Cleaning includes scraping/sweeping off any debris or soil and pressure washing at an off-site location before transportation to the work site to minimize impacts to fish and wildlife. Equipment coming into the LPO watershed, specifically from outside the state, would undergo high-risk inspection as required by ISDA and the Bonner Soil & Water Conservation District. If material is found, equipment would be hot-washed. Work boats or barges would procure annual invasive species stickers that certify watercraft would comply with the IDFG/ISDA inspection policies for invasive species prior to deployment into LPO. Cleaning shall be adequate to remove all life stages of aquatic invasive species.
- A migratory bird nesting survey would be conducted at the beginning of the season, within the study area, prior to ground-disturbing activities. If a nest is identified, a plan for impact minimization would be established with the necessary agencies.
- Turbidity curtains would be used to contain and settle sediments when removing the 24-inch piles at the Bridge 3.9 temporary work bridge.

Floodplains

BNSF would apply for local floodplain development permits from local agencies (City of Sandpoint and Bonner County) to comply with FEMA National Flood Insurance Program standards. Applications for these permits would include a hydraulic analysis documenting that the Project would result in “no-rise” in the 100-year BFE.

Archaeological and Historic Resources

A Project-specific IDP would be prepared and provided to consulting parties and interested Tribes prior to construction. The IDP would identify the appropriate parties to be contacted and protocols to follow if cultural materials are exposed during construction.

Visual Quality

Avoidance and minimization measures related to visual quality include:

- Fugitive light from light sources used for construction would be minimized and directed toward the work zone. Where feasible, construction would be limited to daylight hours.
- Materials for permanent structures would be nonreflective to blend with the surroundings where practicable.
- Where feasible, trees may be planted to offset the removal of trees within Project limits.

Noise

Construction activity would occur during daylight hours, equipment would be muffled, and impact driving would be limited to regular work hours from 7 a.m. to 7 p.m.

Preliminary Draft for Agency Review

Hazardous Materials

Avoidance and minimization measures related to the management of hazardous materials include:

- Implementation of 401 WQC Conditions 35 through 42 related to the management of hazardous or deleterious materials (IDEQ 2018a).
- An SPCC plan would be implemented to ensure that pollutants and products would be controlled and contained.
- All equipment would be cleaned of accumulated grease, oil, or mud and inspected daily to check for leaks or problems at an off-site location before transportation to the work site.
- Equipment and machinery used in or over water shall be steam cleaned of oils, grease, and invasive species in an upland location or staging area with appropriate wastewater controls and treatment prior to entering on or over a water of the state (LPO or Sand Creek). Any wastewater or wash water must not be allowed to enter a water of the state. Cleaning shall be enough to remove all life stages of aquatic invasive species.
- Fully stocked petroleum containment spill kits would be at power equipment work sites and construction staging areas during construction.
- Containment would be under equipment that contains fuels or other hazardous materials on the temporary bridge work or within 100 feet of the creek/lake.
- Fuel containers would not be stored on the temporary work bridge. Fueling and maintenance work would occur with secondary containment when on the temporary work bridge. Fuel and hazardous material storage and staging would occur 50 feet away from waters of the United States.
- Fully stocked spill kits would be kept on-site during construction. Spill containment systems must be adequate to contain fuel leaks.
- Petroleum products and hazardous, toxic, and/or deleterious materials shall not be stored, disposed of, or accumulated adjacent to or in the immediate vicinity of waters of the state.
- If contaminated soil is encountered during construction, the contaminated soil would be assessed, handled, stored, and disposed of in accordance with applicable state and federal regulations.

Traffic

The Project would be designed to incorporate the following features to minimize impacts to vessel traffic, as identified in the Reasonable Needs of Navigation Analysis for BNSF Bridge 3.1 and BNSF Bridge 3.9:

- Construction timing of the new bridge over Sand Creek would be limited to periods of minimal to no navigation upstream of existing BNSF Bridge 3.1.
- Design of the new bridge over Sand Creek (Bridge 3.1) would have a higher vertical clearance and wider horizontal clearance than the existing bridge and upstream bridges.
- Proposed BNSF Bridge 3.9 would provide the same vertical clearance as the US 95 bridges to ensure that the rail bridge is not the controlling structure for navigation on LPO and the Pend Oreille River.

Preliminary Draft for Agency Review

- Construction of new bridges and existing bridges would include signage and navigational lighting to provider boaters with clear information on navigational obstructions or limitations throughout construction and after the new rail bridges are in service.
- Notification to mariners would be provided through the USCG Notice to Mariners, signage at marinas and public boat launch facilities, state and local waterways agencies, local newspapers, and publications.

To minimize impacts to vehicular traffic, the BNSF construction contractor would develop a traffic control plan compliant with ITD, Bonner County Road and Bridge, and Sandpoint Police Traffic Safety rules and requirements. Break-in access may require access permits from ITD and/or road use permits from Bonner County and the City of Sandpoint may be required and would be acquired prior to use.

4.2 Compensatory Mitigation

Water Resources and Water Quality/Wetlands

Mitigation for the wetland fill associated with the Proposed Action Alternative is intended to be satisfied via an agency-approved mitigation bank, the Valencia Wetland Mitigation Bank/Valencia Wetlands Trust (bank) located in Priest River, Idaho. The bank is governed by an inter-agency review team consisting of the USACE, USEPA, IDFG, and IDEQ. The USEPA and USACE issued regulations in 2008 establishing a preference for the use of banks to offset wetland impacts when appropriate bank credits are available (40 CFR Part 230 and 33 CFR Parts 325 and 332).

As previously mentioned, the Project would result in a total of 0.28-acre of permanent wetland fill. The bank requires applicants to use the Montana Wetland Function Assessment Method (Burgland 2008) that evaluates 12 specific functions and values of the impacted wetland for water quality, hydrology, and habitat and determines a rating category, functional points, and functional units. Once the functional units are calculated, the bank uses a 1:1 credit ratio for projects within their primary service area in Bonner County, whereby 1 functional unit is equivalent to 1 mitigation bank credit. The functional units for the 0.28-acre wetland impact are calculated to be 0.95 units (see Table 4 in **Appendix C**); therefore, 0.95 credits (1:1 ratio) would be purchased at the bank for compensatory wetland mitigation. The bank currently has approximately 1,000 credits available for purchase (Valencia Wetlands Trust 2017).

Proposed mitigation for 0.88-acre of permanent nearshore fills would be chosen via interested LPO and Sand Creek stakeholders through a collaborative, consensus-based process. Participating stakeholders since May 2018 include the USFWS, IDFG, IDEQ, and other representatives from the Avista Clark Fork project and the Panhandle Chapter of Trout Unlimited. BNSF also separately requested meetings with interested Tribes in April 2018 to initiate mitigation discussions, and the Kootenai Tribe of Idaho subsequently requested participation in the collaborative stakeholder process. Ongoing nearshore mitigation stakeholder meetings and communications are facilitated by BNSF consultants and are focused on identifying watershed projects that are currently underway and/or planned in the near future that are suitable and appropriate to mitigate impacts to affected nearshore areas and aquatic resources. Over 12 potential mitigation projects have been identified and research regarding the feasibility and cost of each project is underway. The Kootenai Tribe may identify additional projects for the group to consider.

Preliminary Draft for Agency Review

5.0 COORDINATION AND COMPLIANCE

5.1 Agency and Tribal Consultation

USFWS

The USFWS is being formally consulted for potential impacts to listed species (bull trout) that are documented to occur in the action area under Section 7 of the ESA. A BA was prepared for the Proposed Action Alternative and was submitted to the USFWS by the USCG to initiate consultation. Consultation will be ongoing through the EA process. It is anticipated that that the USFWS will issue a Biological Opinion for the proposed Project.

Idaho SHPO

The USCG initiated Section 106 consultation with the Idaho SHPO on January 25, 2018, via transmittal of the Cultural Resources Technical Report for the Proposed Action Alternative. SHPO requested additional information regarding impacts to the non-water crossing bridge (Bridge 3.0 over Bridge Street) on March 10, 2018. Additional information was returned to the SHPO via the USCG on June 18, 2018. SHPO provided concurrence with the findings of the Cultural Resources Technical Report on August 8, 2018 (**Appendix G**).

Native American Tribes

The USCG initiated government-to-government Section 106 consultation with Native American Tribes on January 25, 2018. The Cultural Resources Technical Report for the Proposed Action Alternative was transmitted to the Kootenai Tribe of Idaho, the Coeur d' Alene Tribe, the Kalispel Tribe of Indians, and the Spokane Tribe of Indians. The Kootenai Tribe provided a letter to the USCG on February 20, 2018, accepting the offer to initiate government-to-government consultation for the Proposed Action Alternative. Tribal consultation will be ongoing through the EA process. The results of the consultation process will be described in the NEPA decision document (a Finding of No Significant Impact would be provided, if determined appropriate).

5.2 Permits and Approvals

Federal

Due to the need to conduct in-water and overwater work across navigable waters, the Project requires bridge permits from the USCG under Section 9 of the RHA and an individual permit from the USACE under Section 404 of the CWA and Section 10 of the RHA. Applications for federal permits were submitted to these agencies on December 27, 2017.

Because of this federal permit requirement, the Project has received a WQC from IDEQ (as the federal representative of USEPA) to ensure compliance with Section 401 of the CWA. Since Project construction would disturb more than one acre, an NPDES permit would also be obtained from IDEQ (as the federal representative of USEPA) under Section 402 of the CWA. BNSF submitted an application for the WQC to IDEQ on December 27, 2017. The NPDES permit would be obtained prior to construction.

Preliminary Draft for Agency Review

State and Local

Under the ICC Termination Act, 49 U.S.C. § 10501(b), the federal Surface Transportation Board has exclusive jurisdiction over railroad operations and facilities. As such, state and local agencies do not have jurisdiction to require railroads to submit state or local permit applications to construct railroad interstate facilities. However, railroads can and often do voluntarily agree to comply with reasonable state and local environmental regulations. For the Proposed Action Alternative, BNSF has obtained an Encroachment Permit from the IDL under the Idaho Lake Protection Act and local floodplain development permits from the City of Sandpoint and Bonner County to comply with FEMA requirements, including preparation of a hydraulic analysis (**Appendix E**) documenting that the Project has no net rise in the 100-year BFE. In addition, the contractor would work with Idaho Department of Transportation, Bonner County and the City of Sandpoint, where necessary to obtain road and ROW use permits.

BNSF applied for the Encroachment Permit in December 2017. IDL held two public hearings on May 23, 2018, for the IDL Hearing Examiner to gather testimony regarding the proposed action for the record. BNSF conducted a presentation summarizing the proposed action and public testimony was taken, in addition to solicitation for written public comment. The Director of IDL issued a Final Order approving the application with no conditions on June 21, 2018 (**Appendix H**).

5.3 Compliance with Other Laws and Regulations

The current status of compliance with environmental laws and regulations that may apply to the Project is provided in **Table 11**.

Preliminary Draft for Agency Review

Table 11: Status of Compliance with Environmental Laws/Regulations

Law/Regulation	Requirement	Status of Compliance
American Indian Religious Freedom Act	Directs agencies to respect the practice of traditional American Indian religions, including access to religious sites and use of ceremonial items.	The Project is not located on federal lands and, although consultation with interested Tribes is ongoing as noted in Section 5.1, no religious sites have been identified within the Project study.
Archeological and Historic Preservation Act	Requires federal agencies to identify and recover data from archeological sites threatened by their actions.	Compliance with AHPA is satisfied through compliance with Section 106 of the NHPA.
Clean Air Act	Requires agencies to act in conformity with State Implementation Plans that set air quality standards.	The Project does not propose a change in operations beyond improving the fluidity of train traffic. As documented in Section 3.1 of the Draft EA, the Project would not result in an exceedance of regulated emissions standards or a change in attainment designation.
Clean Water Act	Requires dredge and fill permits for certain actions affecting the waters of the United States.	As discussed in Sections 3.3 and 3.4, the proposed Project will result in 0.88 acre of nearshore fill and 0.28 acre of wetland fill. BNSF has applied for a CWA Section 404 permit from the USACE. Compensatory mitigation will be provided. BNSF obtained CWA Section 401 Water Quality Certification from the Idaho Department of Environmental Quality.
Comprehensive Environmental Response, Compensation, and Liability Act	Requires reporting of releases and cleanup of hazardous substances. Requires identification of uncontaminated property prior to transfer. Requires plans for cleanup of contaminated sites and disclosure to public of hazardous materials and processes.	No property acquisition is proposed as part of the proposed Project. Section 3.14 of the Draft EA discusses the risk of spills, the potential to encounter contamination during Project construction and operation, and appropriate responses that would be implemented in such cases.
Endangered Species Act	Requires consultation with USFWS or NOAA Fisheries to ensure actions do not jeopardize threatened or endangered species or their habitat.	As discussed in Sections 3.8 and 5.1, the USCG initiated consultation with the USFWS under Section 7 of the Endangered Species Act. Consultation will be ongoing through the EA process. The outcome may include a Biological Opinion with an Incidental Take Statement or a Letter of Concurrence. No NOAA Fisheries-managed species are present in the Project action area; therefore, consultation with NOAA Fisheries is not required.

Preliminary Draft for Agency Review

Table 11: Status of Compliance with Environmental Laws/Regulations (continued)

Law/Regulation	Requirement	Status of Compliance
Environmental Quality Improvement Act	Declares a national policy for enhancement of environmental quality, assigns primary responsibility to state and local governments, and mandates that agencies conducting or supporting public works activities implement existing environmental protection and enhancement policies.	The USCG will circulate the Draft EA for public and agency review to facilitate preparation of a quality environmental document prior to issuing a decision on the Project.
Flood Disaster Protection Act	Prohibits federal actions related to an occupancy structure in areas subject to flood hazards, unless the property is covered by flood insurance.	As discussed in Section 3.5, the Project is not expected to increase the danger of flooding. BNSF is preparing a hydraulic analysis to document no net rise in the base flood elevation.
Historic Sites Act	Establishes National Historic Landmark program and declares a national policy to preserve sites, buildings, and objects significant in American history.	As discussed in Section 3.9, the cultural resources evaluation conducted for the proposed Project under Section 106 of the NHPA indicates that none of the resources within the Project study area are considered significant in American history.
National Historic Preservation Act	Requires agencies to identify historic properties that may be affected by their actions, and to consult with the State Historic Preservation Officer and others about alternatives and mitigation in the event the proposed action affects an eligible or listed historic property.	Compliance with the NHPA is documented in Section 3.9 of the Draft EA. Consultation with the Idaho State Historic Preservation Office is complete while consultation with other consulting parties is ongoing, as stated in Section 5.1.
Noise Control Act	Prohibits removing noise control devices or rendering them inoperable. Requires the USEPA to act as federal coordinator for noise control efforts and establishing noise control standards.	Section 3.13 of the Draft EA documents potential noise impacts associated with the proposed Project. Construction activities will comply with local noise ordinances.
Resource Conservation and Recovery Act	Regulates hazardous and solid waste activities and underground storage tanks.	Section 3.14 of the Draft EA discusses the potential to encounter contamination during Project construction and summarizes BNSF's emergency preparedness program.
Safe Drinking Water Act	Sets standards for drinking water quality and regulates activities affecting drinking water supplies.	Section 3.3 of the Draft EA analyzes existing drinking water quality and potential impacts from the proposed Project. The Draft EA found no issues with complying with the requirements of the SDWA.

Preliminary Draft for Agency Review

Table 11: Status of Compliance with Environmental Laws/Regulations (continued)

Law/Regulation	Requirement	Status of Compliance
Toxic Substances Control Act	Regulates specific chemical substances, including PCBs and asbestos.	Section 3.14 of the Draft EA discusses the potential to encounter contamination during Project construction, including specific chemical substances. No PCBs or asbestos have been documented within the Project study area.
EO 11514: Protection and Enhancement of Environmental Quality	Requires agencies to monitor, evaluate, and control activities to protect and enhance the quality of the environment.	The USCG is soliciting input from cooperating agencies and other interested parties throughout preparation of the EA prior to issuing a decision on the Project. The USCG's decision document will identify appropriate mitigation measures to minimize potential impacts to the environment.
EO 11988: Floodplain Management	Requires agencies to evaluate the potential effects of any action it takes in a floodplain and consider alternatives to avoid adverse effects.	Section 3.5 of the Draft EA analyzes potential impacts to floodplains. The proposed Project would not result in a significant encroachment into the floodplain. BNSF has prepared a hydraulic analysis to document no net rise in the base flood elevation.
EO 12898: Federal Actions to Address Environmental Justice in Minority Populations and Low-Income Populations	Requires federal agencies to identify and address any disproportionately high and adverse human health or environmental effects of its programs, policies, and activities on minority populations and low-income populations.	Section 3.10 of the Draft EA analyzes potential impacts to low-income and minority populations. The proposed project would not result in disproportionately high and adverse impacts.
EO 13045: Protection of Children from Environmental Health Risks and Safety Risks	Requires federal agencies to make it a high priority to identify and assess environmental health risks and safety risks that may disproportionately affect children.	As documented in Section 3.14 of the Draft EA, the proposed Project would not generate any environmental health and safety risks that would disproportionately affect children.

Notes:
AHPA = Archeological and Historic Preservation Act
CWA = Clean Water Act
EA = Environmental Assessment
NHPA = National Historic Preservation Act
NOAA = National Oceanic and Atmospheric Administration
PCB = polychlorinated biphenyl
SDWA = Safe Drinking Water Act
USACE = U.S. Army Corps of Engineers
USCG = U.S. Coast Guard
USEPA = U.S. Environmental Protection Agency
USFWS = U.S. Fish and Wildlife Service

Preliminary Draft for Agency Review

5.4 Agency Coordination

A summary of agencies and persons contacted during preparation of the EA are identified in **Table 12.**

Table 12: Agencies and Persons Contacted

Agency	Individual	Date Contacted
USACE	Shane Slate, Regulatory Project Manager	February 2017 and ongoing
USCG	Steven Fischer, District Bridge Manger, Thirteenth Coast Guard District	February 2017 and ongoing
USCG	John Greene, Environmental Policy Analyst	February 2017 to April 2018
USCG	Shelly Sugarman, Coast Guard Headquarters, Chief, Bridge Permits and Policy Division	April 2018 and ongoing
USCG	Brian Dunn, Coast Guard Headquarters, Chief, Office of Bridge Programs	May 2018 and ongoing
USCG	James Moore, Bridge Management Specialist	May 2018 and ongoing
USFWS	Marshall Williams, Biologist	August 2017 and ongoing
IDEQ	June Bergquist, Compliance Officer	February 2017 and ongoing
IDL	Amidy Fuson, Resource Specialist Sr.	February 2017 and ongoing
IDL	Jim Brady, Resource Supervisor	February 2017 and ongoing
Idaho SHPO	Matthew Halitsky, Historic Preservation Review Officer	July 2018 and ongoing
Idaho Department of Water Resources	Maureen O'Shea, State National Flood Insurance Program Coordinator	July 2018 and ongoing
Bonner County	Jason Johnson, Planner	July 2018 and ongoing
City of Sandpoint	Don Carter, Inspector	July 2018 and ongoing
City of Sandpoint	Ryan Shea, Assistant Planner	July 2018 and ongoing

Notes:
IDEQ = Idaho Department of Environmental Quality
IDL = Idaho Department of Lands
SHPO = State Historic Preservation Office
USACE = U.S. Army Corps of Engineers
USCG = U.S. Coast Guard
USFWS = U.S. Fish and Wildlife Service

Preliminary Draft for Agency Review

5.5 List of Preparers

Individuals that contributed to preparation of the EA are identified in **Table 13**.

Table 13: List of Environmental Assessment Preparers

Firm	Individual	Contribution
Jacobs	Pierre Bordenave, Director – Environmental Rail	PM, EA Author
Jacobs	Jason Smith, NW Environmental Program Manager	PIC, QA/QC
Jacobs	Diane Williams, Environmental Planner	QA/QC
Jacobs	Maggie Buckley, Senior Environmental Planner	EA Author
Jacobs	Railin Santiago, Environmental Planner	EA Author
Jacobs	Sue PaDelford, Senior Biologist	PM, EA Author
Jacobs	Craig Broadhead, Senior Biologist	EA Author
Jacobs	Bill Bumback, Senior Environmental Planner	EA Author
Jacobs	Sandra Salisbury, Senior Landscape Architect	EA Author
Jacobs	Jennifer Cyr, Technical Editor	QA/QC
Jacobs	Linda St. John, Technical Editor	QA/QC
Jacobs	Ian David Crickmore, GIS	GIS/Map Exhibits
BNSF	Matt Keim, Manager Engineering	Project Description, QA/QC
BNSF	Kris Swanson, Manager Construction Permitting	Project Description, QA/QC
BNSF	Courtney Wallace, Regional Director Public Affairs	Information/Statistics
BNSF	Dava Kaitala, JD, General Director, Construction Permitting	QA/QC, Legal Review
BNSF	Teena Kilian, General Attorney	Legal Review
BNSF	Brooke Gaede, General Attorney	Legal Review
Hanson Professional Services, Inc.	Mat Fletcher, PE	Permit Drawings, Hydraulic Analysis

Notes:
BNSF = BSNF Railway Company
EA = Environmental Assessment
GIS = geographic information system
Jacobs = Jacobs Engineering Group Inc.
PIC = principal in charge
PM = project manager
QA/QC = quality assurance/quality control

Preliminary Draft for Agency Review

6.0 REFERENCES

Association of American Railroads. 2018. *Overview of America's Freight Railroads*.

BNSF Railway Company (BNSF). 2017. "BNSF Price List 6041-B, Item 100, Coal Dust Mitigation Requirements." September 19. BNSF 6041-B.

———. 2018. BNSF Hazmat website. https://www.bnsfhazmat.com Access November 5, 2018.

———. 2010. Summary BNSF/UP Super Trial 2010. Available at http://www.bnsf.com/ship-with-bnsf/energy/coal/coal-dust.html. Accessed November 5, 2018.

Bonner County. Bonner County, Idaho land use map. n.d. https://www.bonnercountyid.gov/county-maps. Accessed October 12, 2017.

Burglund, J., and R. McEldowney. 2008. *Montana Department of Transportation, Montana Wetland Assessment Method*. Prepared for the Montana Department of Transportation by Post, Buckley, Schuh, and Jernigan. Helena, MT. March.

City of Sandpoint. Consumer Confidence Reports dated from 2005 to 2017. http://www.sandpointidaho.gov/your-government/departments/public-works-building/water/consumer-confidence. Accessed June 22, 2018.

———. n.d. Image of 1908 smelter. http://www.sandpointidaho.gov/your-government/history#ad-image-3. Accessed June 26, 2018.

Dredge Operations and Environmental Research. 2005. *Silt Curtains as a Dredging Project Management Practice*. ERDC TN-DOER-E21. September. http://www.dtic.mil/dtic/tr/fulltext/u2/a437859.pdf.

Environmental Laboratory. 1987. *Corps of Engineers Wetlands Delineation Manual*. Technical Report Y-87-1 (on-line edition). U.S. Army Corps of Engineers Waterways Experiment Station, Vicksburg, MS. Final Report. January.

Federal Emergency Management Act (FEMA). 2015. *National Preparedness Goal Information Sheet, Second Edition: Overview*. https://www.fema.gov/media-library-data/1443624338930-32e9ed3ac6cf8e95d7d463ed9b9685df/NationalPreparednessGoal_InformationSheet_2015.pdf.

Federal Highway Administration (FHWA). 2012. *Tappan Zee Hudson River Crossing Project. Final Environmental Impact Statement*. August 2012

———. 2015. *Guidelines for the Visual Impact Assessment of Highway Projects*. Publication No. FHWA-HEP-15-029. January.

Federal Railroad Administration (FRA). 2010. *Roadway Worker Protection* (49 CFR Part 214, subparts A and C). www.railroadeducation.com. Accessed May 6, 2018.

Federal Transit Administration (FTA). 2018. *Flood Plains Compliance Process*. https://www.transit.dot.gov/regulations-and-guidance/environmental-programs/floodplains. Accessed October 12, 2018.

Preliminary Draft for Agency Review

Hastings, M.C., A. N. Popper, J. J. Finneran, and P. Lanford (Hastings et al.). 1996. "Effects of low-frequency underwater sound on hair cells of the inner ear and lateral line of the teleost fish Astronotus ocellatus." Journal of the Acoustical Society of America. 99(3): 1759–1766.

Idaho Department of Environmental Quality (IDEQ). 2014. https://mapcase.deq.idaho.gov/wq2014/. Accessed July 26, 2018.

_____. 2017. *Idaho's 2014 Integrated Report.* Prepared by Cara Hastings and Jason Williams, IDEQ. February.

———. 2018a. *Draft Section 401 Water Quality Certification.* April 4.

———. 2018b.*Rathdrum Prairie Aquifer Boundary*. http://www.deq.idaho.gov/regional-offices-issues/coeur-dalene/rathdrum-prairie-aquifer/boundary. Accessed June 22, 2018.

Idaho Department of Fish and Game (IDFG). 2017a. Fish species data. https://idfg.idaho.gov/species/request-data. Accessed August 23, 2017.

———. Bonner County Observation Lists. n.d. https://idfg.idaho.gov/species/taxa/list/county/bonner?page=4. Accessed May 6, 2018.

Idaho Department of Lands (IDL). 2003. *Hellroaring Creek Cumulative Watershed Effects Assessment*.

Idaho Department of Water Resources. 2018. Wellhead protection areas in the Project vicinity. https://idwr.idaho.gov/Apps/appsWell/WCInfoSearchExternal/.

Idaho State Department of Agriculture (ISDA). 2014. *Idaho Invasive Species Watercraft Inspection* Program *5 Year Review 2009-2013*. January 15. http://www.idaholandcan.org/article/Idaho-Invasive-Species-Watercraft-Inspection-Program-5-Year-Review-20092013/2041. Accessed January 17, 2018.

———. 2018a. Invasive Species/Noxious Weeds Program. Invasive Species of Idaho. "Pest Overview." http://invasivespecies.idaho.gov/pests. Accessed October 17, 2018.

———. 2018b. Invasive Species/Noxious Weeds Program. Invasive Species of Idaho. "Aquatic Plants." http://invasivespecies.idaho.gov/aquatic-plants. Accessed October 17, 2018.

Idaho Transportation Department (ITD). 2005. Hourly Traffic Volume Report by Direction – Station # 308; Route: US-95. September. http://apps.itd.idaho.gov/apps/roadwaydata/308SandpointNorthLeg/2005/05-09Sep/L308_SandpointNleg_Sep05_HourlyTrafficVolumeReportByDirection.pdf

Jacobs Engineering Group Inc. (Jacobs). 2018a. *Reasonable Needs of Navigation Analysis for Bridge 3.9, Sandpoint Junction Connector Project*. January.

———. 2018b. *Wetlands and Waters of the U.S. Delineation Report, BNSF Railway Sandpoint Junction Connector*. January 17.

Preliminary Draft for Agency Review

———. 2018c *Alternatives Analysis, Sandpoint Junction Connector Project*. Updated January 22.

———. 2018d. *Reasonable Needs of Navigation Analysis for Bridge 3.1, Sandpoint Junction Connector Project*. Updated January 23.

———. 2018e. *Biological Assessment (BA), BNSF Railway Sandpoint Junction Connector*. February 19.

———. 2018f. Personal communication regarding drinking water sources between Sue PaDelford, Senior Biologist, and Jeff Crowley, Water Treatment Plant Superintendent, City of Sandpoint Water Department. June 26.

———. 2018g. *Cultural Resources Inventory for the BNSF Sandpoint Junction Connector Project, Bonner County, Idaho*. Revised August.

Lake CDA Investments, LLC v. Idaho Department of Lands, 149 Idaho 274, 282, 233 P.3d 721, 279 (2010; quoting Coulsen V. Aberdeen-Springfield Canal Co., 47 Idaho 619, 626-27,277 P. 542, 544-45 [1929]).

MacInnis, J. D., Jr., Lackaff, B. B., Boese, R. M., Stevens, G., King, S., and Lindsay, R. C. (MacInnis et al.). 2009. *The Spokane Valley-Rathdrum Prairie Aquifer Atlas 2009 Update.* Spokane, Washington, City of Spokane.

Missoulian. 2012. "Study: Missoula coal dust not 'significant;' health director wants more specifics." Rob Chaney. June 16. http://missoulian.com/news/state-and-regional/study-missoula-coal-dust-not-significant-health-director-wants-more/article_d6e0fa26-b7fa-11e1-81c8-0019bb2963f4.html.

Phillips, Roger. 2016. "Kokanee rebound in Lake Pend Oreille." https://idfg.idaho.gov/region/panhandle/kokanee-rebound-2016. Idaho Department of Fish and Game. October. Accessed October 17, 2018.

Regional Response Team 10 (RRT)/Northwest Area Committee (NWAC). 2005. *Pend Oreille Geographic Response Plan*. http://www.rrt10nwac.com/Files/GRP/PendOreille.pdf.

———. 2018. *Northwest Area Contingency Plan*. January 1. https://rrt10nwac.com/NWACP/Default.aspx.

State of Idaho, Office of the Governor. 2017. "Executive Order No. 2017-05. Continuing the Idaho Invasive Species Council and Replacing Executive Order 2010-14."

Surface Transportation Board (STB). 2015. *Tongue River Railroad Draft Environmental Impact Statement*. April 17.

TerraGraphics Environmental Engineering. 2006. *Sand Creek Stressor Identification*. Prepared for the U.S. Environmental Protection Agency (Seattle, WA) and the Idaho Department of Environmental Quality (Coeur d' Alene, Idaho). September 29.

Preliminary Draft for Agency Review

Turnpenny, A. W. H., K. P. Thatcher, and J. R. Nedwell (Turnpenny et al.). 1994. "The effects on fish and other marine animals of high-level underwater sound." Fawley Aquatic Research Laboratory, Ltd., Report FRR 127/94, UK. p 79. October.

U.S. Army Corps of Engineers (USACE). Albeni Falls Dam research. n.d. http://www.nws.usace.army.mil/Missions/Civil-Works/Locks-and-Dams/Albeni-Falls-Dam/. Accessed June 26, 2018.

———. 2016. *Millennium Bulk Terminals – Longview NEPA Draft Environmental Impact Statement*. September 30.

U.S. Census Bureau. n.d. Population census data for Bonner County, Idaho. https://www.census.gov/quickfacts/fact/table/bonnercountyidaho/PST045217. Accessed July 12, 2018.

———. n.d. Population census data for the City of Sandpoint, Idaho. https://factfinder.census.gov/faces/tableservices/jsf/pages/productview.xhtml?src=CF. Accessed July 12, 2018.

———. 2012-2016. American Factfinder. 2012-2016 American Community Survey 5-Year Estimates. S1701. DP05.

U.S. Coast Guard (USCG). 2000. *NEPA Implementing Procedures and Policy for Considering Environmental Impacts*. Commandant Instruction M16475.ID. November 29.

U.S. Department of Agriculture (USDA). Natural Resources Conservation Service. 1982. *Soil Survey of Bonner County, Idaho*. https://www.nrcs.usda.gov/wps/portal/nrcs/surveylist/soils/survey/state/?stateId=ID. Accessed 2017.

U.S. Department of Transportation (USDOT) Bureau of Transportation Statistics. Railroad Lines GIS Data. WGS84 Datum. Unprojected. http://osav-usdot.opendata.arcgis.com/datasets/2553aa5e457349efb600502050bf9c3c_0. Accessed August 6, 2018.

U.S. Environmental Protection Agency (EPA). 1998. *Locomotive Emission Standards, Regulatory Support Document*. Office of Mobile Sources, Office of Air and Radiation. April.

U.S. Fish and Wildlife Service (USFWS). 2018a. Email communication noting that Bridge 3.1 is in bull trout critical habitat per federal designation of lower Sand Creek as an inlet of Lake Pend Oreille between Marshall Williams, Fish and Wildlife Biologist, Eastern Washington/Northern Idaho Field Office, Spokane, Washington, and USCG, USACE, IDEQ, and Jacobs. June 7.

_____. 2018b. National Wetland Inventory GIS Data. North American 1983 Datum. NAD 83 Albers Projection. https://www.fws.gov/wetlands/data/State-Downloads.html. Accessed August 6.

Valencia Wetlands Trust. 2017. Email communication regarding available wetland bank credits. From D. Collier, Managing Partner. To Diane Williams, Environmental Planner, Jacobs. October 19.

Preliminary Draft for Agency Review

Washington Research Council. "NW Clean Air Agency finds no emissions problems from coal transport." Richard S. Davis. March 25, 2014. https://researchcouncil.org/nw-clean-air-agency-finds-no-emissions-problems-from-coal-transport/.

Washington State Department of Ecology (WDOE) and Cowlitz County. *Millennium Bulk Terminals—Longview EIS Environmental Impact Statement, State Environmental Policy Act, Final Environmental Impact Statement, Volume I: Final Environmental Impact Statement*. April 28, 2017. http://millenniumbulkeiswa.gov/sepa-eis.html.

Washington State Department of Transportation (WSDOT). 2018. *Biological Assessment Preparation Advanced Training Manual Version 01-2018*.

Preliminary Draft for Agency Review

Appendix A

Bridge Permit Drawings

Preliminary Draft for Agency Review

PROPOSED PERMANENT BRIDGE 3.1

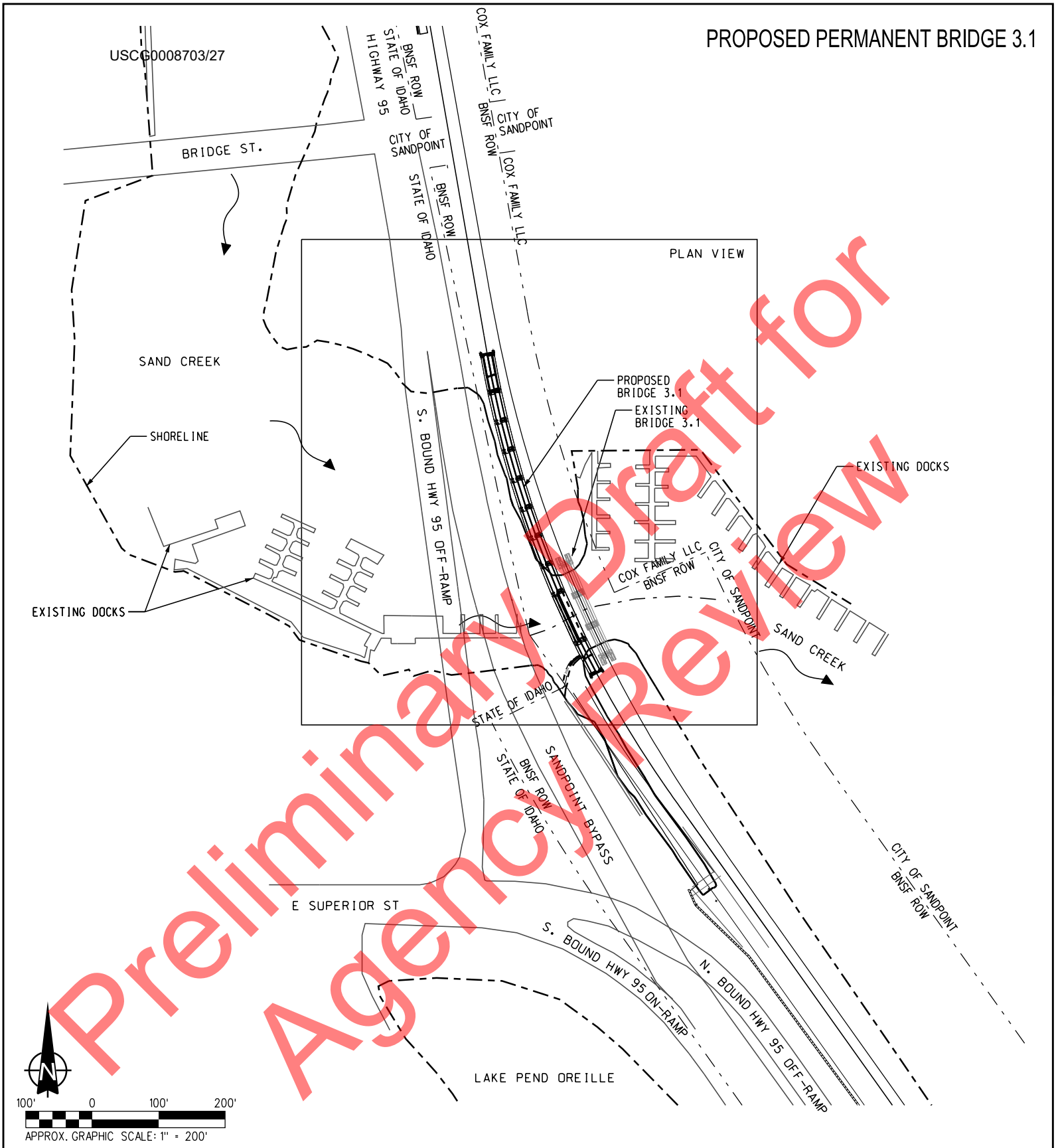

Preliminary Draft for Agency Review

BASED ON: HANSON PROFESSIONAL SERVICES, INC. PRELIMINARY PLANS. ELEVATIONS ARE RELATIVE TO NAVD88. CONCEPTUAL PLANS UTILIZED TO OBTAIN COAST GUARD BRIDGE PERMIT

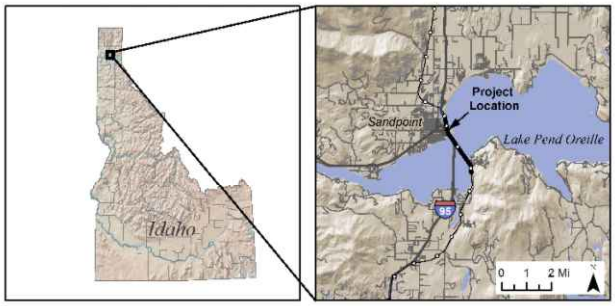

LOCATION / VICINITY MAP

PROJECT: BNSF / SANDPOINT JUNCTION CONNECTOR BRIDGE 3.1
OWNER: BNSF RAILWAY COMPANY
CONSULTANT: JACOBS ENGINEERING
LOCATION: BNSF BRIDGE 3.1 MONTANA DIVISION, KOOTENAI RIVER SUB, LINE SEGMENT 45, MP 3.1
MILE POINT OF BRIDGE LOCATION FROM MOUTH: 0.1
WATERWAY: SAND CREEK
CITY: SANDPOINT **COUNTY:** BONNER **STATE:** IDAHO
DATE: 11/01/2018

11/1/2018 12:34:48 PM $USER$
P:\W3X76600\600DISC\6200ESIGN\JARPA\SPJ_CG_BR3-1_Vicinity.dgn

USCG0008713/27

PLAN VIEW

PROPOSED PERMANENT BRIDGE 3.1

SAMPLE DEPTHS	
NAME	OLW DEPTH (FEET)
D-1	DRY
D-2	5.5
D-3	4.5
D-4	5.5
D-5	3.0
D-6	1.0
D-7	5.0
D-8	0.5
D-9	6.5
D-10	3.0
D-11	1.5
D-12	4.0
D-13	3.0
D-14	5.5
D-15	5.0
D-16	3.0

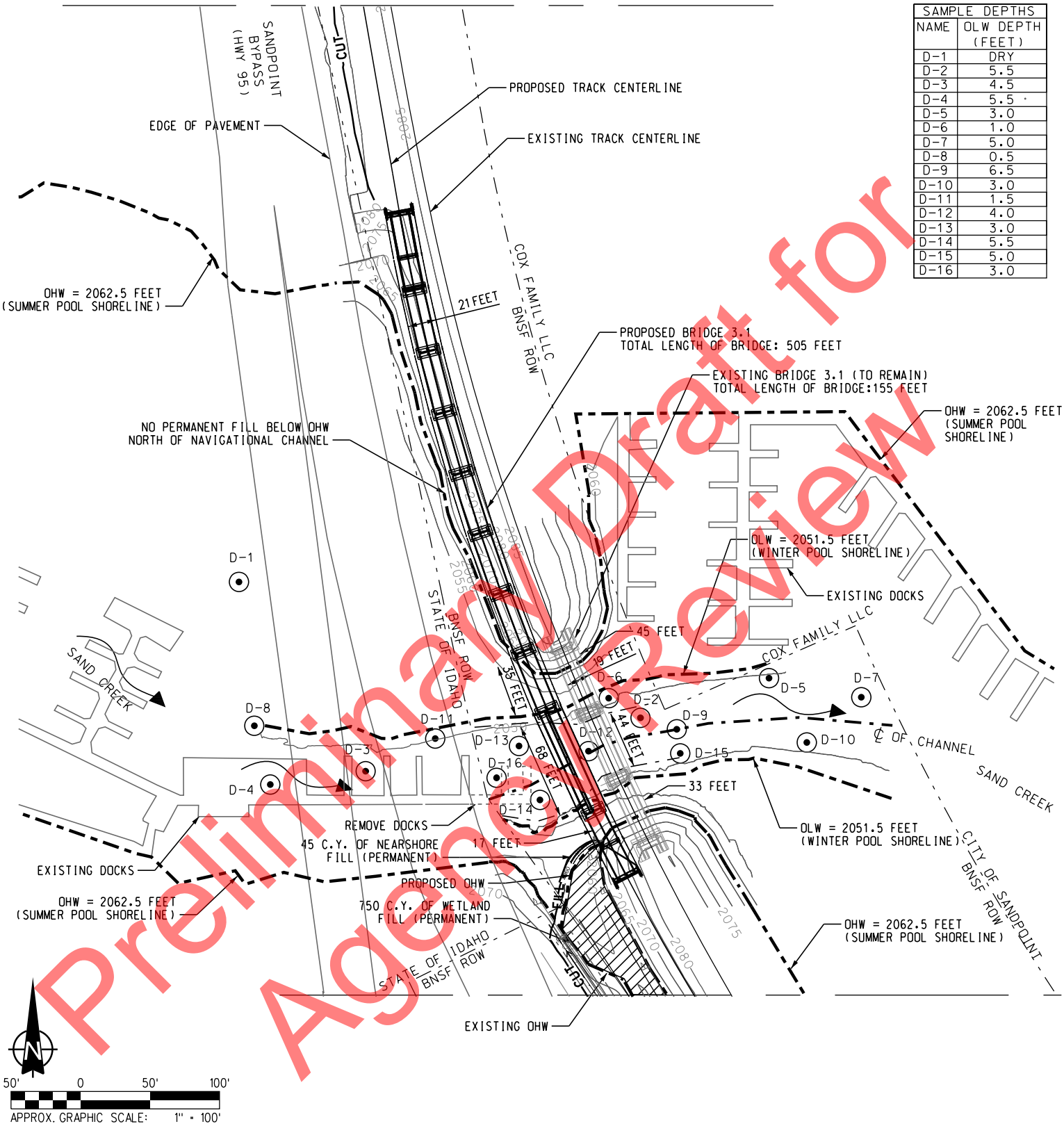

Preliminary Draft for Agency Review

BASED ON: HANSON PROFESSIONAL SERVICES, INC. PRELIMINARY PLANS. ELEVATIONS ARE RELATIVE TO NAVD88. CONCEPTUAL PLANS UTILIZED TO OBTAIN COAST GUARD BRIDGE PERMIT

LEGEND

- BNSF RIGHT-OF-WAY (ROW)
- SHORELINE (SUMMER AND WINTER POOL)
- CENTERLINE OF NAVIGATIONAL CHANNEL
- LIMITS OF NAVIGATIONAL CHANNEL
- EXISTING STRUCTURE (ROADS, DOCKS, BRIDGE 3.1)
- SAMPLE WATER DEPTHS
- PERMANENT FILL BELOW OHW

EXISTING CONDITIONS / PROPOSED WORK

PROJECT: BNSF / SANDPOINT JUNCTION CONNECTOR BRIDGE 3.1
OWNER: BNSF RAILWAY COMPANY
CONSULTANT: JACOBS ENGINEERING
LOCATION: BNSF BRIDGE 3.1 MONTANA DIVISION, KOOTENAI RIVER SUB, LINE SEGMENT 45, MP 3.1
MILE POINT OF BRIDGE LOCATION FROM MOUTH: 0.1
WATERWAY: SAND CREEK
CITY: SANDPOINT **COUNTY:** BONNER **STATE:** IDAHO
DATE: 11/01/2018

11/1/2018 11:32:49 AM $USER$
P:\W3X76600\600DISC\620DESIGN\JARPA\SPJ_CG_BR3-1_RS-06.dgn

USCG0008723/27

ELEVATION VIEW

PROPOSED PERMANENT BRIDGE 3.1

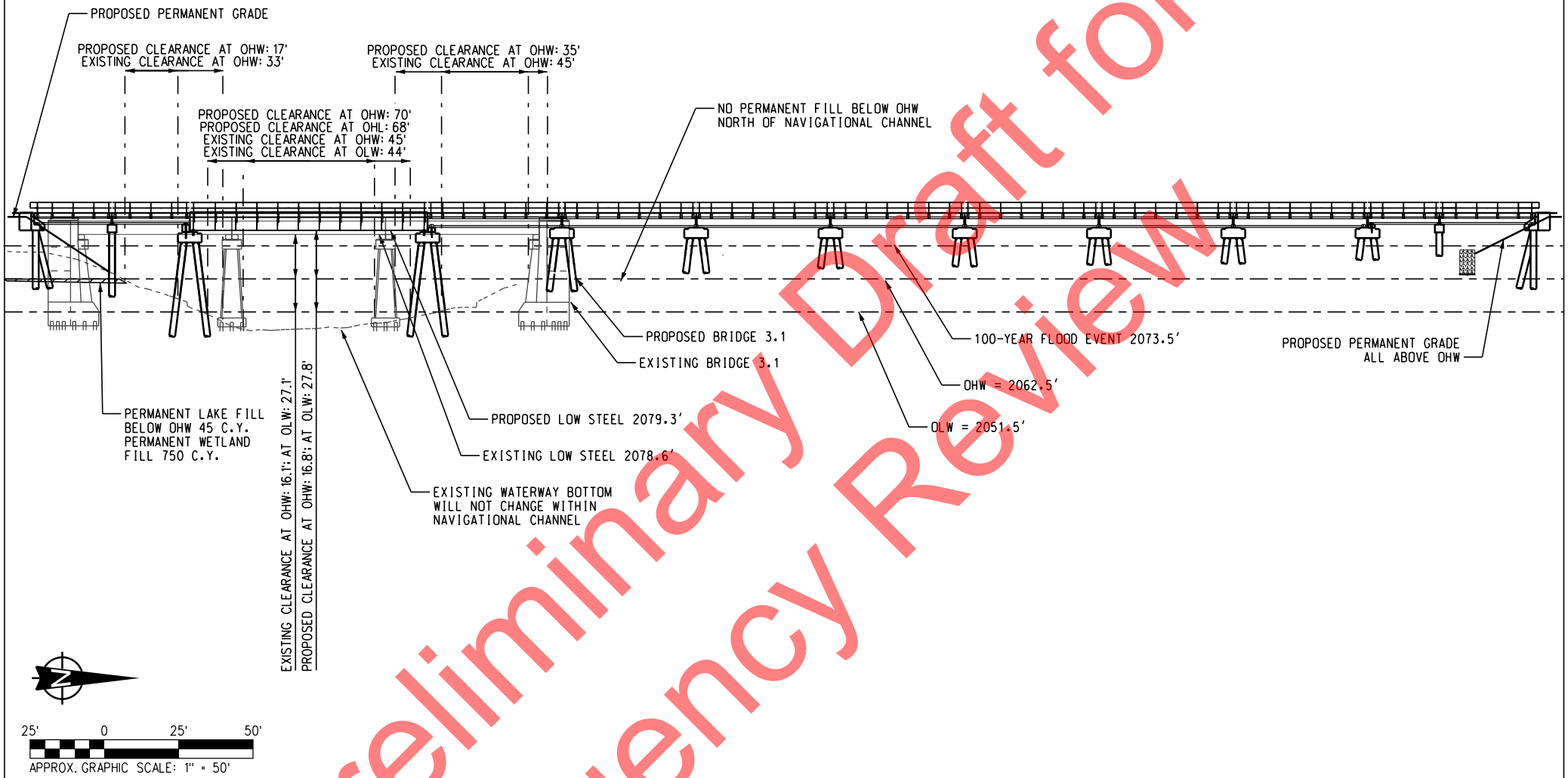

BASED ON: HANSON PROFESSIONAL SERVICES, INC. PRELIMINARY PLANS. ELEVATIONS ARE RELATIVE TO NAVD88. CONCEPTUAL PLANS UTILIZED TO OBTAIN COAST GUARD BRIDGE PERMIT

LEGEND

- SHORELINE (SUMMER AND WINTER POOL; 100-YEAR FLOOD)
- LIMITS OF NAVIGATIONAL CHANNEL
- PERMANENT FILL BELOW OHW
- EXISTING GROUND / WATERWAY BOTTOM
- EXISTING STRUCTURE

EXISTING CONDITIONS / PROPOSED WORK

PROJECT: BNSF / SANDPOINT JUNCTION CONNECTOR BRIDGE 3.1
OWNER: BNSF RAILWAY COMPANY
CONSULTANT: JACOBS ENGINEERING
LOCATION: BNSF BRIDGE 3.1 MONTANA DIVISION, KOOTENAI RIVER SUB, LINE SEGMENT 45, MP 3.1
MILE POINT OF BRIDGE LOCATION FROM MOUTH: 0.1
WATERWAY: SAND CREEK
CITY: SANDPOINT **COUNTY:** BONNER **STATE:** IDAHO
DATE: 11/01/2018

Preliminary Draft for Agency Review

11/1/2018 12:58:32 PM $USER$
P:\W3X7660O\600DISC\620DESIGN\JARPA\SPJ_CG_BR3-1_Elev.dgn

USCG0008733/27

TYPICAL SECTION VIEW

PROPOSED PERMANENT BRIDGE 3.1

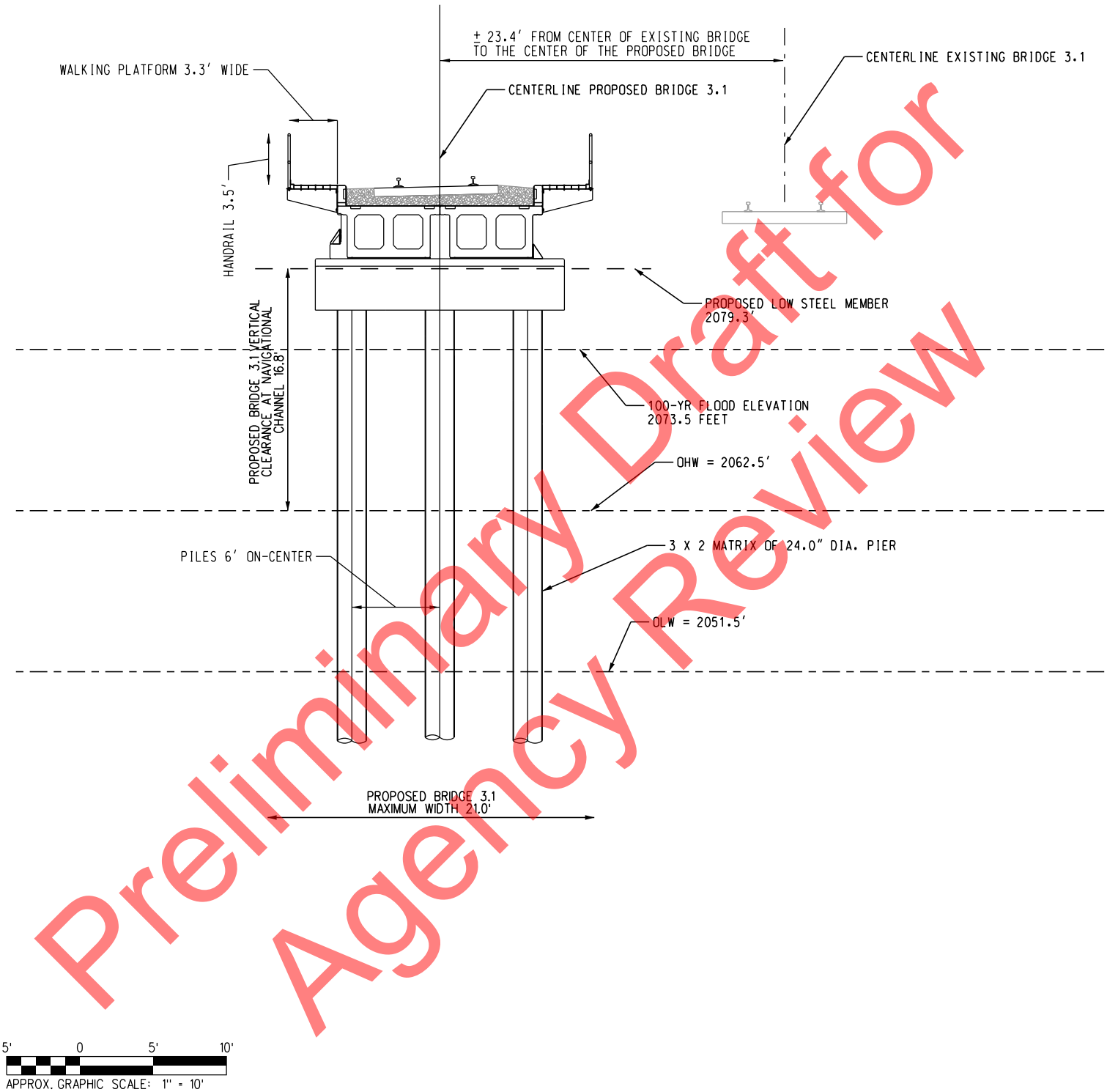

Preliminary Draft for Agency Review

5' 0 5' 10'

APPROX. GRAPHIC SCALE: 1" = 10'

BASED ON: HANSON PROFESSIONAL SERVICES, INC. PRELIMINARY PLANS. ELEVATIONS ARE RELATIVE TO NAVD88. CONCEPTUAL PLANS UTILIZED TO OBTAIN COAST GUARD BRIDGE PERMIT

EXISTING CONDITIONS / PROPOSED WORK

PROJECT: BNSF / SANDPOINT JUNCTION CONNECTOR BRIDGE 3.1
OWNER: BNSF RAILWAY COMPANY
CONSULTANT: JACOBS ENGINEERING
LOCATION: BNSF BRIDGE 3.1 MONTANA DIVISION, KOOTENAI RIVER SUB, LINE SEGMENT 45, MP 3.1
MILE POINT OF BRIDGE LOCATION FROM MOUTH: 0.1
WATERWAY: SAND CREEK
CITY: SANDPOINT **COUNTY:** BONNER **STATE:** IDAHO
DATE: 11/01/2018

11/1/2018 12:57:42 PM $USLH$
P:\W376600\600DISC\620DESIGN\JARPA\SPJ_CG_BR3-1_TypicalXS.dgn

C. <u>PLAN SHEETS</u> - Plans submitted with the bridge permit application become an official, and permanent, part of the issued permit or permit amendment. <u>To minimize delays, provide the following information:</u>

1. Plan Sheet Checklist - Use the following checklist for specifics to include with bridge plans:

a. **<u>General</u>**

✓ Provide all plans in standard 8 ½ X 11" size, providing the fewest sheets possible that still show significant project structural details. Plan sheets may be submitted electronically.

<u>NOTE</u>: Do not show bridge navigational lighting plans on bridge plan and elevation views.

✓ Show all dimensions and distances in U.S. linear feet in decimal form (versus feet and inches). For international bridges also show all dimensions in both linear feet and meters.

✓ Include the datum used in the plan and elevation view. Use the same datum for all submitted drawings (e.g. NAVD, NGVD). For replacement and modification projects, the datum used may differ between the new plans and the previously approved plans for the existing structure. If this situation occurs, please be sure to show all necessary conversions to demonstrate any change in approved clearances.

Pending All plan sheets must bear the date, signature and stamp of a professional engineer.

<u>NOTE</u>: the engineer stamp date must either match or be dated later than the title block date before the permit and plans can be approved by the Coast Guard.

If desired, it is acceptable for the engineer to add the following statement to the plans, "Conceptual plans utilized to obtain Coast Guard bridge permit".

✓ The total number of plan sheets identified in the title block must match the number of plan sheets submitted for approval.

b. **<u>Title Blocks</u>** - Include the following items in the title blocks (lower right-hand corner on all of the plan sheets):

✓ Applicant/Owner;

✓ Consultant/Agent;

✓ Name of Bridge(s);

✓ Name of Waterway;

✓ Mile point of bridge(s) location (from confluence of mouth of waterway) in

Preliminary Draft for Agency Review

statute miles;

✓ City, county/parish, and state (state whether the bridge(s) is at, near, or between – as appropriate);

✓ Date of plans (i.e., mm/dd/yyyy, must either match or be dated prior to the engineer's date stamp); and

✓ Sheet number and total number of sheets in set to be approved (i.e., Sheet 1 of 5).

c. **Location/Vicinity Map**

✓ Show graphic scale and north arrow;

✓ Show location of bridge(s) on waterway;

✓ Identify the name of the waterway;

✓ Show course of waterway (i.e. ebb/flood, or direction of flow for non-tidal waters);

✓ Show structures immediately adjacent to the proposed bridge(s) and their relation to the proposed bridge(s);

✓ Identify wildlife and waterfowl refuges and any historical and archaeological sites; and

✓ Insert a small map of the state in which the project is located with an arrow showing the location of the proposed project.

d. **Plan View**

✓ Show graphic bar scale and north arrow;

✓ Identify the adjacent property owners at the four corners of the proposed structure(s);

✓ Show existing shorelines (may be defined or established by local or state regulation);

✓ Show ebb and flood in tidal waters and direction of flow in non-tidal waterway;

✓ Show mean high and low waterlines in tidal areas. Show ordinary high water and ordinary low water elevations if proposed activity is in a non-tidal waterway;

✓ Show all portions of existing bridge(s) that will remain in place;

✓ Show all portions of existing bridge(s) that will be removed by using dashed lines;

✓ Show principal dimensions of structure(s) from grade-to-grade. Show length,

Preliminary Draft for Agency Review

width, etc.;

✓ Show location of dredging, excavation, fill or rip-rap, to include approximate number of cubic yards. Note: The Coast Guard does not approve these activities or items. Contact the U.S. Army Corps of Engineers for approval;

✓ Show location of the bridge protective system, piles, cables, etc. existing or to be constructed in the waterway. Identify type of material to be used;

✓ Show limits of navigational channel;

✓ Show axis (centerline) of channel;

✓ Show horizontal clearances, normal to the axis (centerline) of the channel between the bridge protective system, pilings, or abutments;

✓ Show water depth at mean low (or ordinary low if non-tidal) at various locations in the channel, under, upstream and downstream of the bridge(s); and

Not required at this time Show the bridge protective system.

e. **Elevation View**

✓ Show graphic bar scale and north arrow;

✓ Show mean high and mean low water elevations in tidal areas. Show ordinary high and low water elevations in non-tidal areas;

✓ Show amount of fill material in cubic yards below mean high water;

✓ Show horizontal clearance normal to the axis (centerline) of the channel between the bridge protective fender system, pilings, or abutments, as appropriate for navigational channel;

✓ Show vertical clearances referenced to the appropriate high water stage either Mean High Water (MHW) or Ordinary High Water (OHW). Show vertical clearances at the center, as well as at the horizontal limits of the navigational channel (the most restrictive vertical clearance in the navigational channel);

N/A If the bridge(s) will have a draw, show the draw in the open and closed positions. Vertical clearances in the open position might not be unlimited, especially for vertical lift bridges and bascule bridges. For bascule bridges, specify which part of the navigation channel has an unlimited clearance in the open position i.e. the center 50 feet of the channel, etc;

✓ Show proposed navigational envelope (opening);

✓ Show proposed and existing contour of waterway bottom;

✓ Show 100-year flood elevation;

Preliminary Draft for Agency Review

✓ Show the location and elevation of the low steel member of the navigation span; and

N/A If the bridge(s) will have a permanent traveler system installed for inspection/maintenance, show the reduction in vertical clearance (traveler height below low steel) and the location of traveler storage when not in use.

f. **Typical Section View**

✓ Show graphic bar scale;

✓ Show out-to-out width of the structure(s). (This is the width of the bridge(s) at its widest point.); and

✓ Include location and dimensions of travel lanes, shoulders, sidewalks, fishing/pedestrian platforms, railings, pipelines, etc.

g. **Details of the Bridge Protective System** (if details are known and ready for CG approval as part of the permit decision)

Not required at this time

Show bridge pier protective system in plan and elevation views including detail of attachment to pier, countersunk bolts, and relationship to mean high and low waterlines (on elevation view).

Submitted Separately

h. **Temporary Structures/Falsework** (if details are developed and ready for CG approval as part of the permit decision)

____ Show temporary structures/falsework;

____ Show existing bridge(s) to be removed using dashed lines; and

____ Show minimum horizontal and vertical clearances during construction.

Preliminary Draft for Agency Review

PROPOSED PERMANENT BRIDGE 3.9

USCG0008783/27

SHORELINE

SANDPOINT, ID

HWY 95

PLAN - 1

LAKE PEND OREILLE
(STATE OF IDAHO)

PLAN - 2

EXISTING BRIDGE 3.9

PROPOSED BRIDGE 3.9

PLAN - 3

HWY 95 CAUSEWAY

BNSF ROW

PLAN - 4

LAKE PEND OREILLE
(STATE OF IDAHO)

HWY 95 LONG BRIDGE

SPOKANE, WA

PLAN - 5

SHORELINE

PLAN - 6

N

250' 0 250' 500'

APPROX. GRAPHIC SCALE: 1" = 500'

BASED ON: HANSON PROFESSIONAL SERVICES, INC. PRELIMINARY PLANS.
ELEVATIONS ARE RELATIVE TO NAVD88. CONCEPTUAL PLANS UTILIZED TO OBTAIN COAST GUARD BRIDGE PERMIT

Preliminary Draft for Agency Review

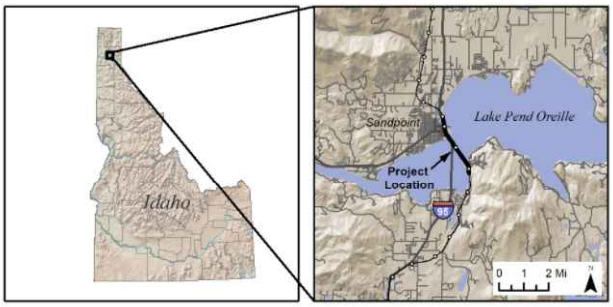

VICINITY / LOCATION MAP

PROJECT: BNSF / SANDPOINT JUNCTION CONNECTOR BRIDGE 3.9
OWNER: BNSF RAILWAY COMPANY
CONSULTANT: JACOBS ENGINEERING GROUP
LOCATION: BNSF BRIDGE 3.9 MONTANA DIVISION, KOOTENAI RIVER SUB, LINE SEGMENT 45, MP 3.9
MILE POINT OF BRIDGE LOCATION FROM MOUTH: 2.7
WATERWAY: LAKE PEND OREILLE
CITY: SANDPOINT **COUNTY:** BONNER **STATE:** IDAHO
DATE: 11/06/2018

11/5/2018 5:39:18 PM $USER$
P:\W327600\600DSC\620DESIGN\JARPA\SPJ_CC_BR3-9_Vicinity.dgn

USCG0008793/27

PLAN VIEW - 1

PROPOSED PERMANENT BRIDGE 3.9

SAMPLE DEPTHS	
NAME	OLW DEPTH (FEET)
D-1	DRY
D-2	0.5
D-3	1.0
D-4	1.0
D-5	3.0
D-6	DRY
D-7	3.0
D-8	1.0
D-9	5.0
D-10	5.5

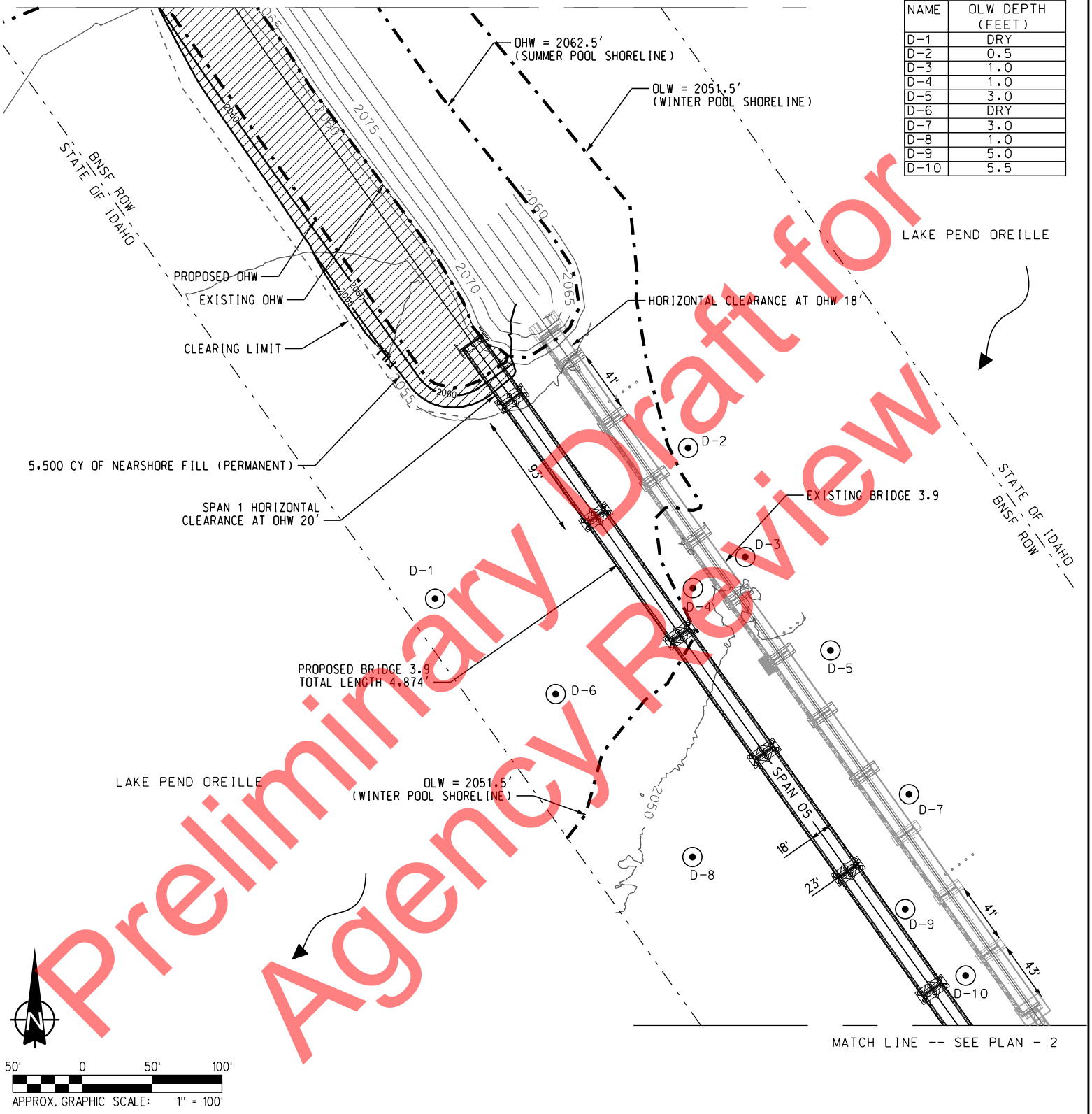

Preliminary Draft for Agency Review

BASED ON: HANSON PROFESSIONAL SERVICES, INC. PRELIMINARY PLANS. ELEVATIONS ARE RELATIVE TO NAVD88. CONCEPTUAL PLANS UTILIZED TO OBTAIN U.S. COAST GUARD BRIDGE PERMIT

LEGEND

- BNSF RIGHT-OF-WAY (ROW)
- SHORELINE (SUMMER AND WINTER POOL)
- STRUCTURE (ROADS, DOCKS, EXISTING BRIDGE)
- CLEARING LIMITS
- SAMPLE WATER DEPTH

EXISTING CONDITIONS / PROPOSED WORK

PROJECT: BNSF / SANDPOINT JUNCTION CONNECTOR BRIDGE 3.9
OWNER: BNSF RAILWAY COMPANY
CONSULTANT: JACOBS ENGINEERING GROUP
LOCATION: BNSF BRIDGE 3.9 MONTANA DIVISION, KOOTENAI RIVER SUB, LINE SEGMENT 45, MP 3.9
MILE POINT OF BRIDGE LOCATION FROM MOUTH: 2.7
WATERWAY: LAKE PEND OREILLE
CITY: SANDPOINT **COUNTY:** BONNER **STATE:** IDAHO
DATE: 11/06/2018

11/5/2018 6:02:40 PM $USER$
P:\W3X76600\600DISC\620DESIGN\JARPA\SPJ_CG_BR3-9_RS-10.dgn

PLAN VIEW - 2

PROPOSED PERMANENT BRIDGE 3.9

USCG0008803/27

SAMPLE DEPTHS	
NAME	OLW DEPTH (FEET)
D-1	1.5
D-2	2.5
D-3	4.5
D-4	2.5
D-5	3.5
D-6	2.5
D-7	1.5
D-8	0.5
D-9	1.5
D-10	0.5

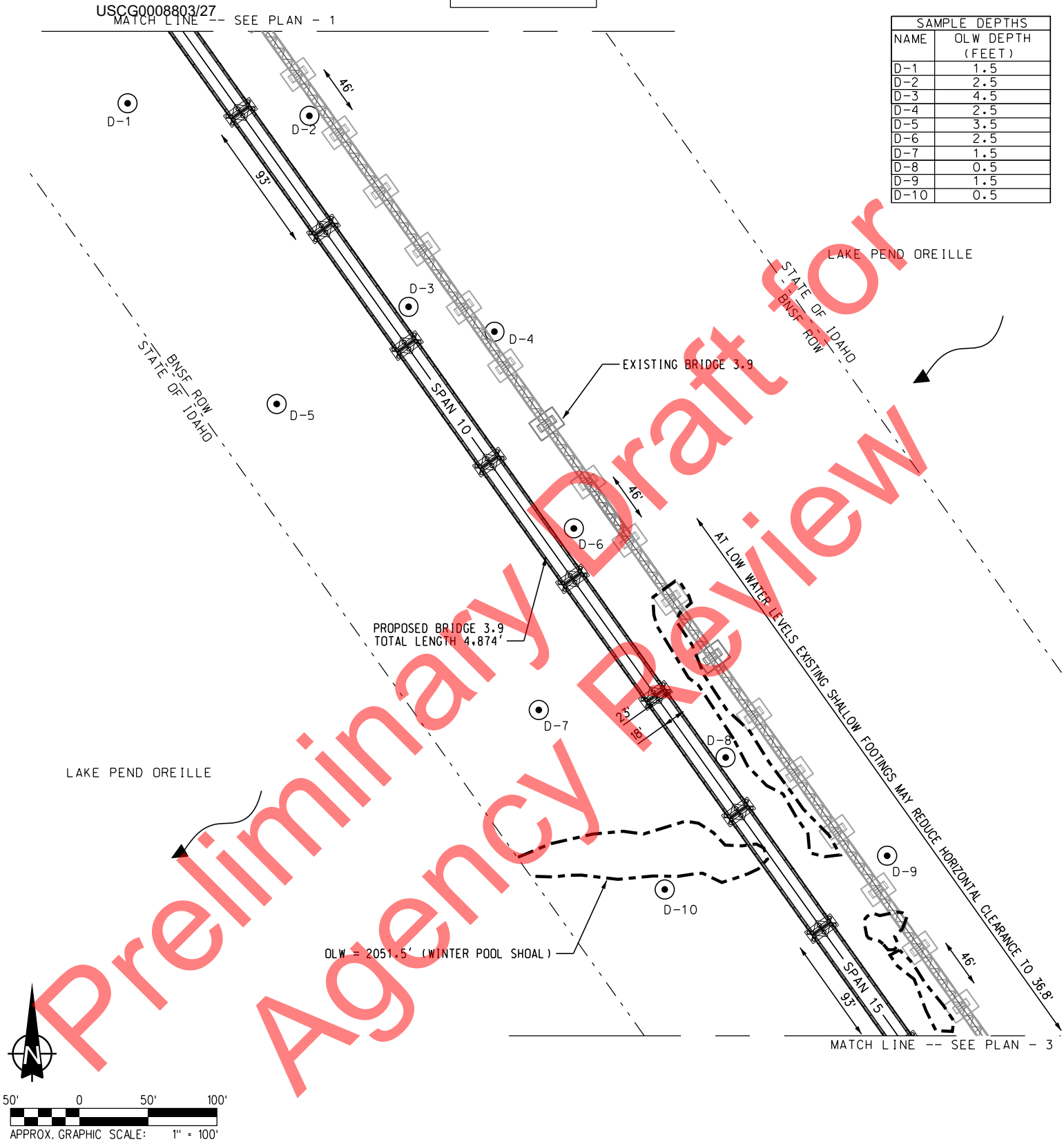

Preliminary Draft for Agency Review

BASED ON: HANSON PROFESSIONAL SERVICES, INC. PRELIMINARY PLANS. ELEVATIONS ARE RELATIVE TO NAVD88. CONCEPTUAL PLANS UTILIZED TO OBTAIN U.S. COAST GUARD BRIDGE PERMIT

LEGEND

- BNSF RIGHT-OF-WAY (ROW)
- ORDINARY LOW WATER (OLW)
- SAMPLE WATER DEPTH

EXISTING CONDITIONS / PROPOSED WORK

PROJECT: BNSF / SANDPOINT JUNCTION CONNECTOR BRIDGE 3.9
OWNER: BNSF RAILWAY COMPANY
CONSULTANT: JACOBS ENGINEERING GROUP
LOCATION: BNSF BRIDGE 3.9 MONTANA DIVISION, KOOTENAI RIVER SUB, LINE SEGMENT 45, MP 3.9
MILE POINT OF BRIDGE LOCATION FROM MOUTH: 2.7
WATERWAY: LAKE PEND OREILLE
CITY: SANDPOINT **COUNTY:** BONNER **STATE:** IDAHO
DATE: 11/06/2018

11/5/2018 6:02:07 PM $USER$
P:\18X7860\00\DSC\620DESIGN\JARPA\SPJ_CG_BR3-9_RS-11.dgn

PLAN VIEW - 3

PROPOSED PERMANENT BRIDGE 3.9

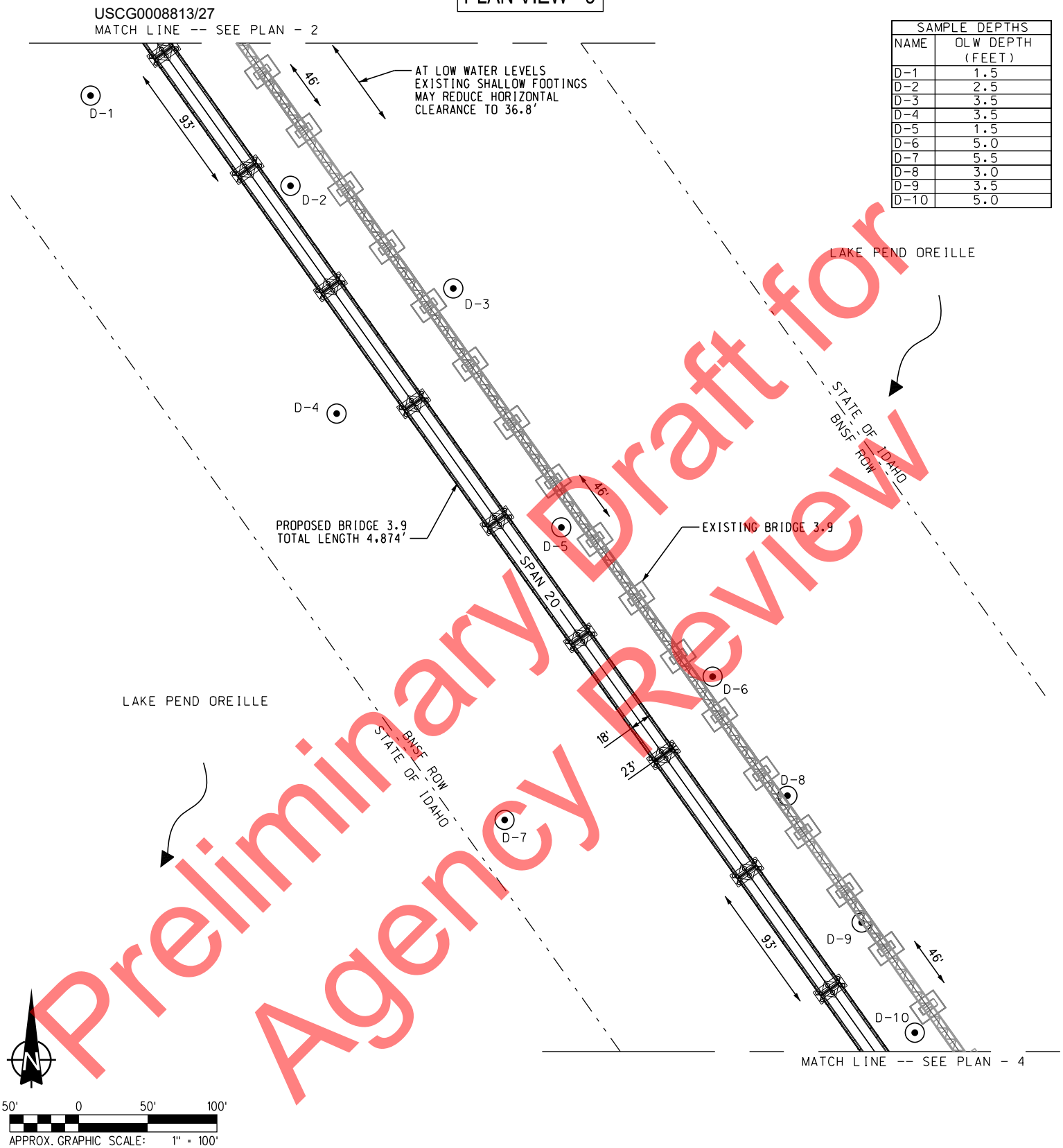

SAMPLE DEPTHS	
NAME	OLW DEPTH (FEET)
D-1	1.5
D-2	2.5
D-3	3.5
D-4	3.5
D-5	1.5
D-6	5.0
D-7	5.5
D-8	3.0
D-9	3.5
D-10	5.0

Preliminary Draft for Agency Review

BASED ON: HANSON PROFESSIONAL SERVICES, INC. PRELIMINARY PLANS. ELEVATIONS ARE RELATIVE TO NAVD88. CONCEPTUAL PLANS UTILIZED TO OBTAIN U.S. COAST GUARD BRIDGE PERMIT

LEGEND

— - - — - BNSF RIGHT-OF-WAY (ROW)

⊙ SAMPLE WATER DEPTHS

EXISTING CONDITIONS / PROPOSED WORK

PROJECT: BNSF / SANDPOINT JUNCTION CONNECTOR BRIDGE 3.9
OWNER: BNSF RAILWAY COMPANY
CONSULTANT: JACOBS ENGINEERING GROUP
LOCATION: BNSF BRIDGE 3.9 MONTANA DIVISION, KOOTENAI RIVER SUB, LINE SEGMENT 45, MP 3.9
MILE POINT OF BRIDGE LOCATION FROM MOUTH: 2.7
WATERWAY: LAKE PEND OREILLE
CITY: SANDPOINT **COUNTY:** BONNER **STATE:** IDAHO
DATE: 11/06/2018

11/5/2018 6:09:12 PM $USER$
P:\WX7860\0\60005SL\620DESIGN\JARPA\SP2_CG_BR3-9_R5-12.dgn

USCG0008823/27

PLAN VIEW - 4

PROPOSED PERMANENT BRIDGE 3.9

SAMPLE DEPTHS	
NAME	OLW DEPTH (FEET)
D-1	7.5
D-2	11.5
D-3	6.5
D-4	11.0
D-5	6.5
D-6	10.5
D-7	8.0
D-8	9.0
D-9	11.5
D-10	9.5

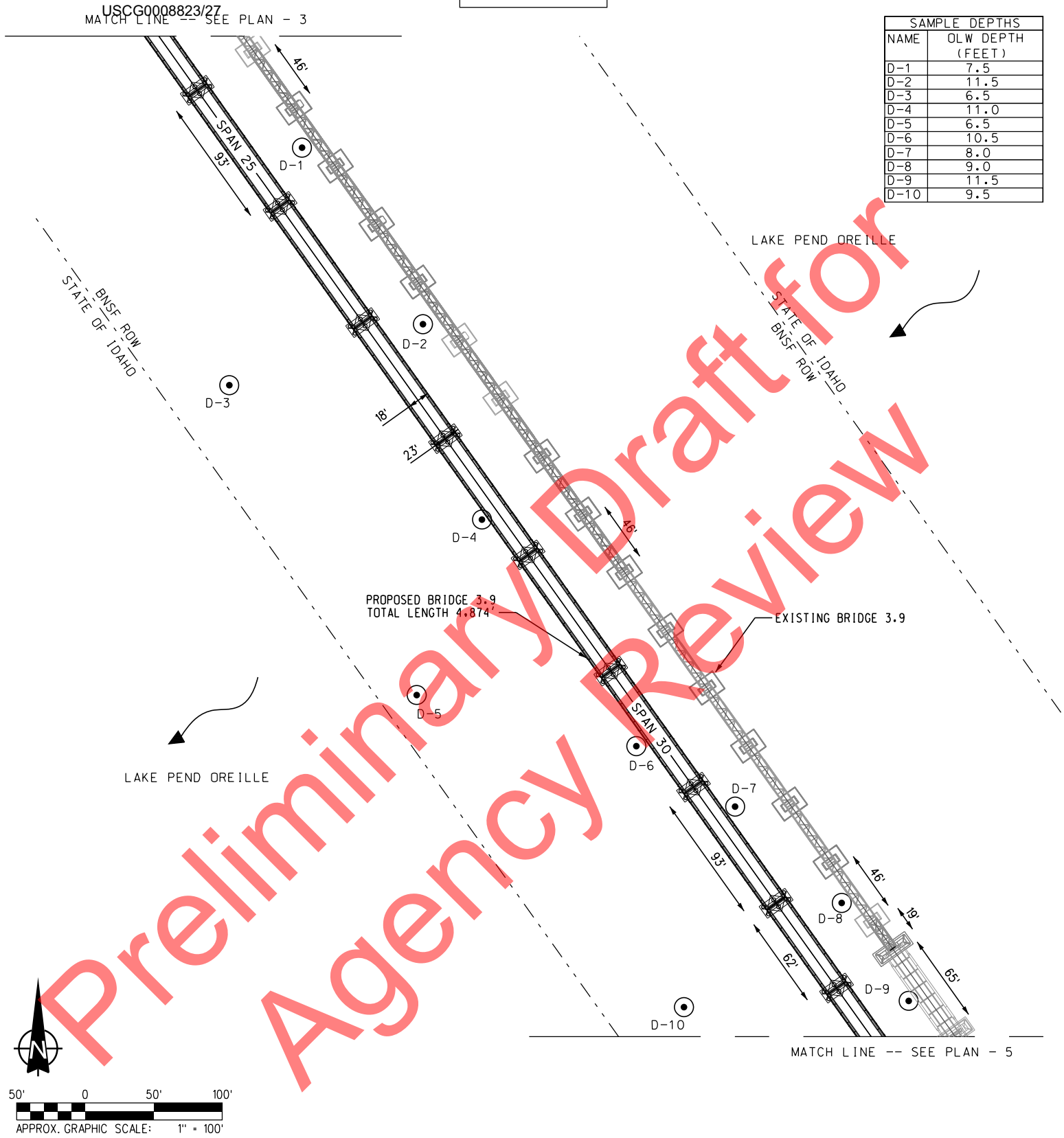

Preliminary Draft for Agency Review

BASED ON: HANSON PROFESSIONAL SERVICES, INC. PRELIMINARY PLANS. ELEVATIONS ARE RELATIVE TO NAVD88. CONCEPTUAL PLANS UTILIZED TO OBTAIN U.S. COAST GUARD BRIDGE PERMIT

LEGEND

— - - — - BNSF RIGHT-OF-WAY (ROW)

⊙ SAMPLE WATER DEPTHS

EXISTING CONDITIONS / PROPOSED WORK

PROJECT: BNSF / SANDPOINT JUNCTION CONNECTOR BRIDGE 3.9
OWNER: BNSF RAILWAY COMPANY
CONSULTANT: JACOBS ENGINEERING GROUP
LOCATION: BNSF BRIDGE 3.9 MONTANA DIVISION, KOOTENAI RIVER SUB, LINE SEGMENT 45, MP 3.9
MILE POINT OF BRIDGE LOCATION FROM MOUTH: 2.7
WATERWAY: LAKE PEND OREILLE
CITY: SANDPOINT **COUNTY:** BONNER **STATE:** IDAHO
DATE: 11/06/2018

11/9/2018 6:01:42 PM $USER$
P:\NPX7F660\60005C\620DESIGN\JARPA\SP_LC_BR3-9_RS-13.dgn

PLAN VIEW - 5

PROPOSED PERMANENT BRIDGE 3.9

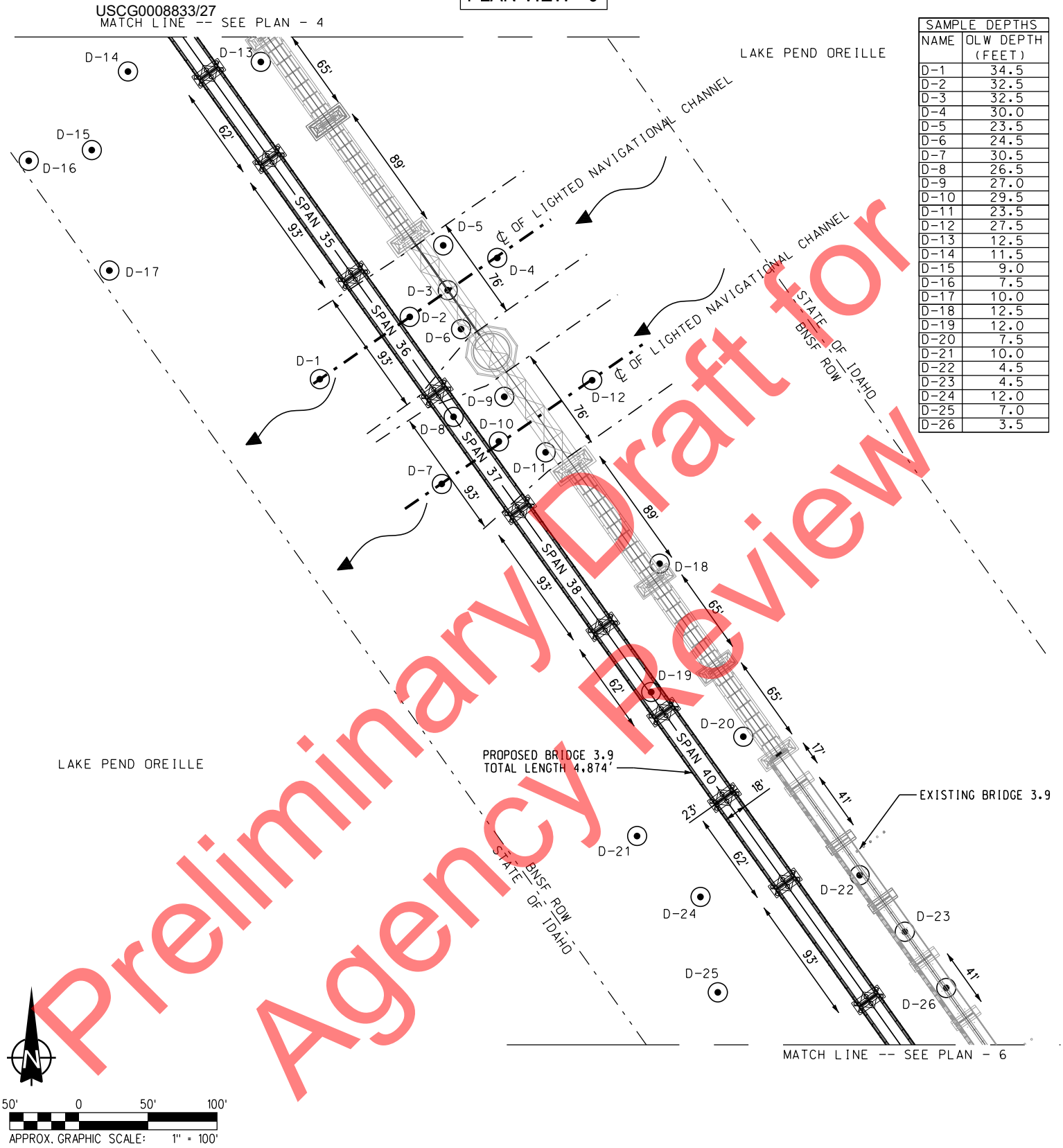

SAMPLE DEPTHS	
NAME	OLW DEPTH (FEET)
D-1	34.5
D-2	32.5
D-3	32.5
D-4	30.0
D-5	23.5
D-6	24.5
D-7	30.5
D-8	26.5
D-9	27.0
D-10	29.5
D-11	23.5
D-12	27.5
D-13	12.5
D-14	11.5
D-15	9.0
D-16	7.5
D-17	10.0
D-18	12.5
D-19	12.0
D-20	7.5
D-21	10.0
D-22	4.5
D-23	4.5
D-24	12.0
D-25	7.0
D-26	3.5

Preliminary Draft for Agency Review

BASED ON: HANSON PROFESSIONAL SERVICES, INC. PRELIMINARY PLANS. ELEVATIONS ARE RELATIVE TO NAVD88. CONCEPTUAL PLANS UTILIZED TO OBTAIN U.S. COAST GUARD BRIDGE PERMIT

LEGEND

- BNSF RIGHT-OF-WAY (ROW)
- CENTERLINE OF NAVIGATIONAL CHANNEL
- LIMITS OF NAVIGATIONAL CHANNEL
- SAMPLE WATER DEPTH

EXISTING CONDITIONS / PROPOSED WORK

PROJECT: BNSF / SANDPOINT JUNCTION CONNECTOR BRIDGE 3.9
OWNER: BNSF RAILWAY COMPANY
CONSULTANT: JACOBS ENGINEERING GROUP
LOCATION: BNSF BRIDGE 3.9 MONTANA DIVISION, KOOTENAI RIVER SUB, LINE SEGMENT 45, MP 3.9
MILE POINT OF BRIDGE LOCATION FROM MOUTH: 2.7
WATERWAY: LAKE PEND OREILLE
CITY: SANDPOINT **COUNTY:** BONNER **STATE:** IDAHO
DATE: 11/06/2018

11/14/2018 6:01:11 PM USER$
P:\BX7560\01\60005C\62005C\DESIGN\JARPA\SP_LCC_BR3-9_RS-14.dgn

PLAN VIEW - 6

PROPOSED PERMANENT BRIDGE 3.9

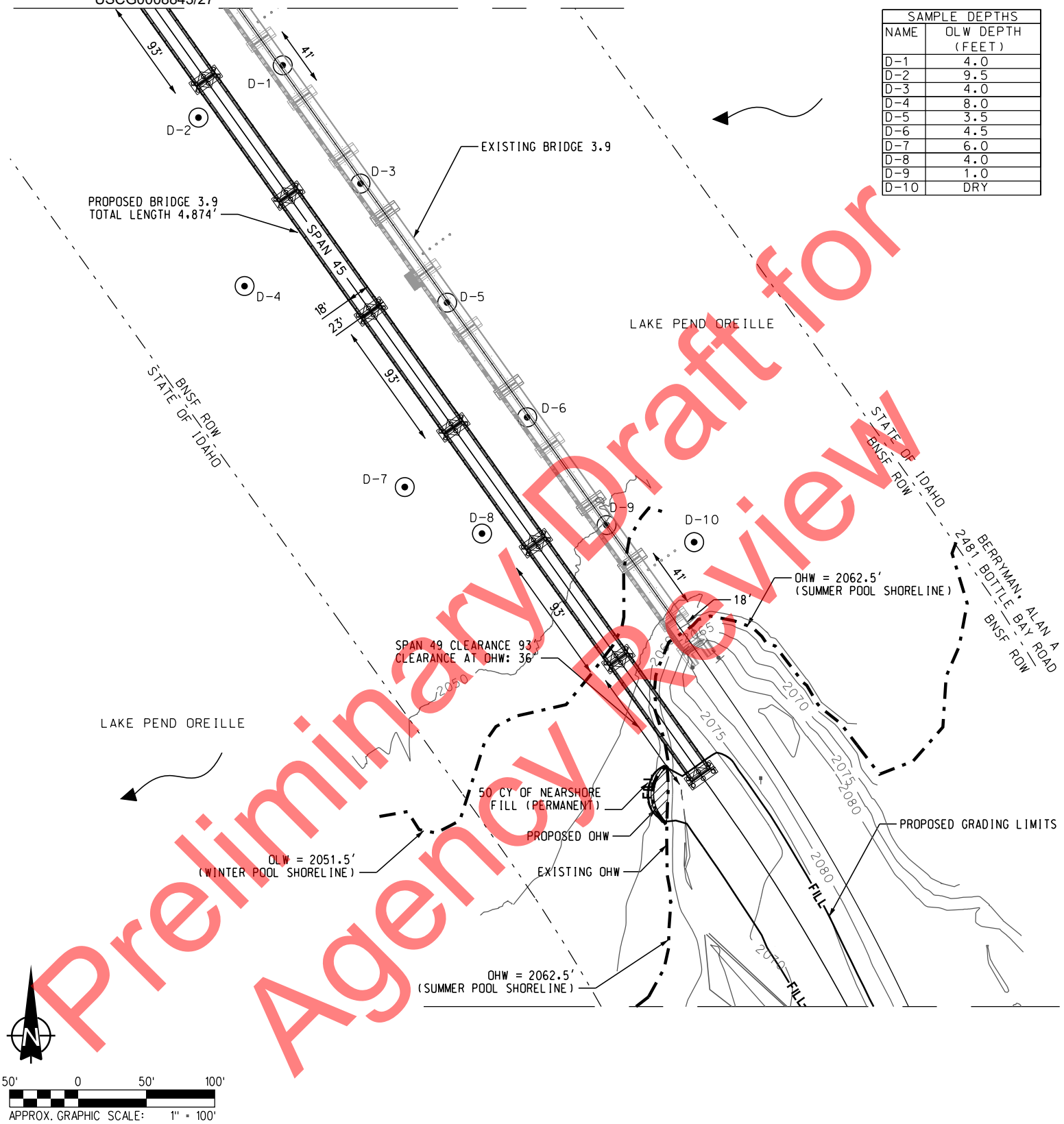

SAMPLE DEPTHS	
NAME	OLW DEPTH (FEET)
D-1	4.0
D-2	9.5
D-3	4.0
D-4	8.0
D-5	3.5
D-6	4.5
D-7	6.0
D-8	4.0
D-9	1.0
D-10	DRY

Preliminary Draft for Agency Review

BASED ON: HANSON PROFESSIONAL SERVICES, INC. PRELIMINARY PLANS. ELEVATIONS ARE RELATIVE TO NAVD88. CONCEPTUAL PLANS UTILIZED TO OBTAIN U.S. COAST GUARD BRIDGE PERMIT

LEGEND

- BNSF RIGHT-OF-WAY (ROW)
- SHORELINE (SUMMER AND WINTER POOL)
- STRUCTURE (ROADS, DOCKS)
- SAMPLE WATER DEPTH

EXISTING CONDITIONS / PROPOSED WORK

PROJECT: BNSF / SANDPOINT JUNCTION CONNECTOR BRIDGE 3.9
OWNER: BNSF RAILWAY COMPANY
CONSULTANT: JACOBS ENGINEERING GROUP
LOCATION: BNSF BRIDGE 3.9 MONTANA DIVISION, KOOTENAI RIVER SUB, LINE SEGMENT 45, MP 3.9
MILE POINT OF BRIDGE LOCATION FROM MOUTH: 2.7
WATERWAY: LAKE PEND OREILLE
CITY: SANDPOINT **COUNTY:** BONNER **STATE:** IDAHO
DATE: 11/06/2018

11/5/2018 5:56:39 PM $USER$
P:\W3X76600\600DISC\6200ESIGN\JARPA\SPJ_CG_BR3-9_RS-15.dgn

PROPOSED PERMANENT BRIDGE 3.9
ELEVATION VIEW - 01

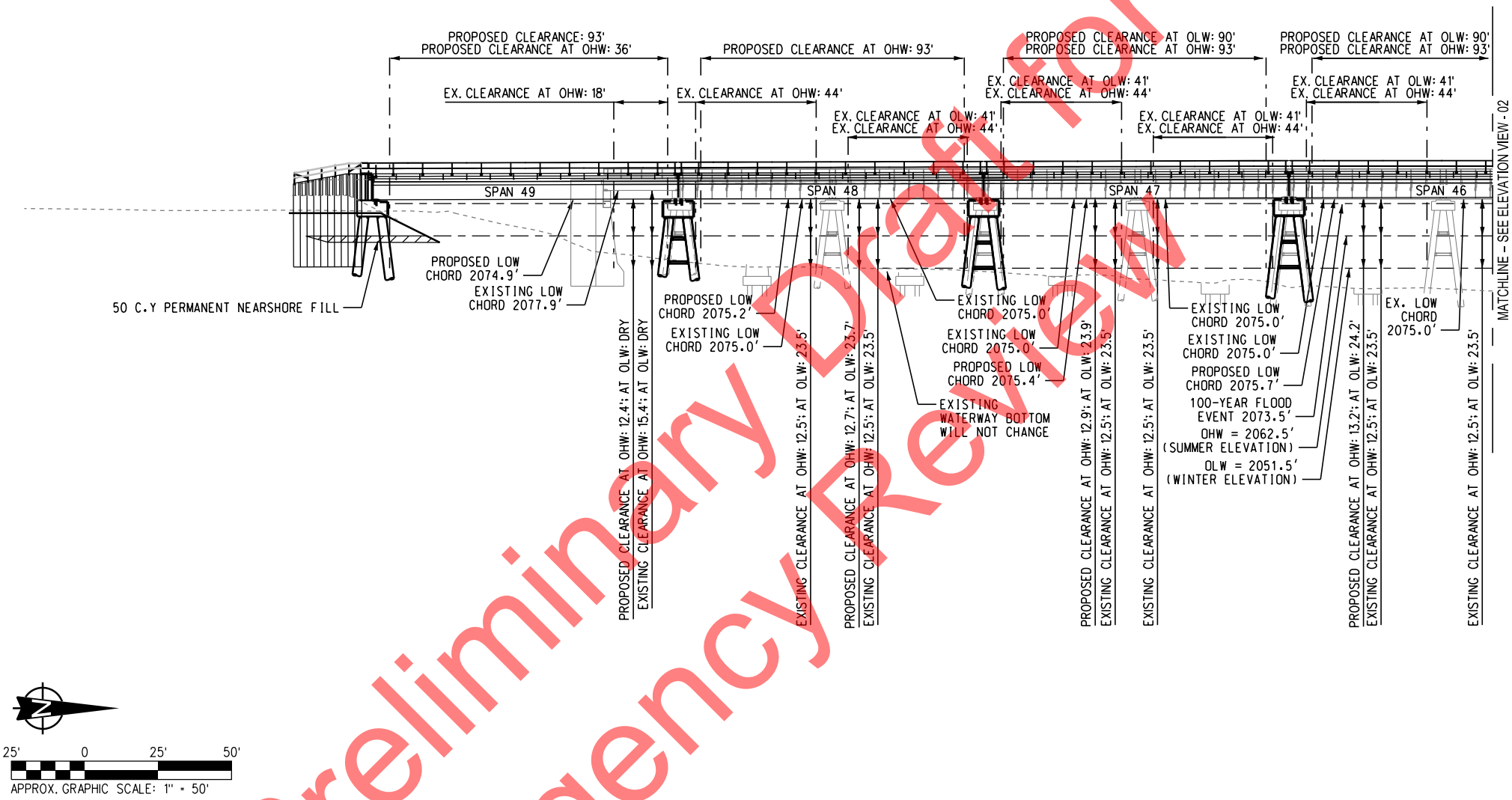

BASED ON: HANSON PROFESSIONAL SERVICES, INC. PRELIMINARY PLANS. ELEVATIONS ARE RELATIVE TO NAVD88. CONCEPTUAL PLANS UTILIZED TO OBTAIN U.S. COAST GUARD BRIDGE PERMIT

LEGEND

- - — - — LIMITS OF NAVIGATIONAL CHANNEL
EXISTING STRUCTURE
PROPOSED STRUCTURE

EXISTING CONDITIONS / PROPOSED WORK

PROJECT: BNSF / SANDPOINT JUNCTION CONNECTOR BRIDGE 3.9
OWNER: BNSF RAILWAY COMPANY
CONSULTANT: JACOBS ENGINEERING GROUP
LOCATION: BNSF BRIDGE 3.9 MONTANA DIVISION, KOOTENAI RIVER SUB, LINE SEGMENT 45, MP 3.9
MILE POINT OF BRIDGE LOCATION FROM MOUTH: 2.7
WATERWAY: LAKE PEND OREILLE
CITY: SANDPOINT **COUNTY:** BONNER **STATE:** IDAHO
DATE: 11/06/2018

Preliminary Draft for Agency Review

11/5/2018 4:47:28 PM $USER$
P:\W3X76600\600DISC\620DESIGN\JARPA\SPJ_CG_BR3-9_Elev-01.dgn

PROPOSED PERMANENT BRIDGE 3.9
ELEVATION VIEW - 02

SPOKANE, WA ← → **SANDPOINT, ID**

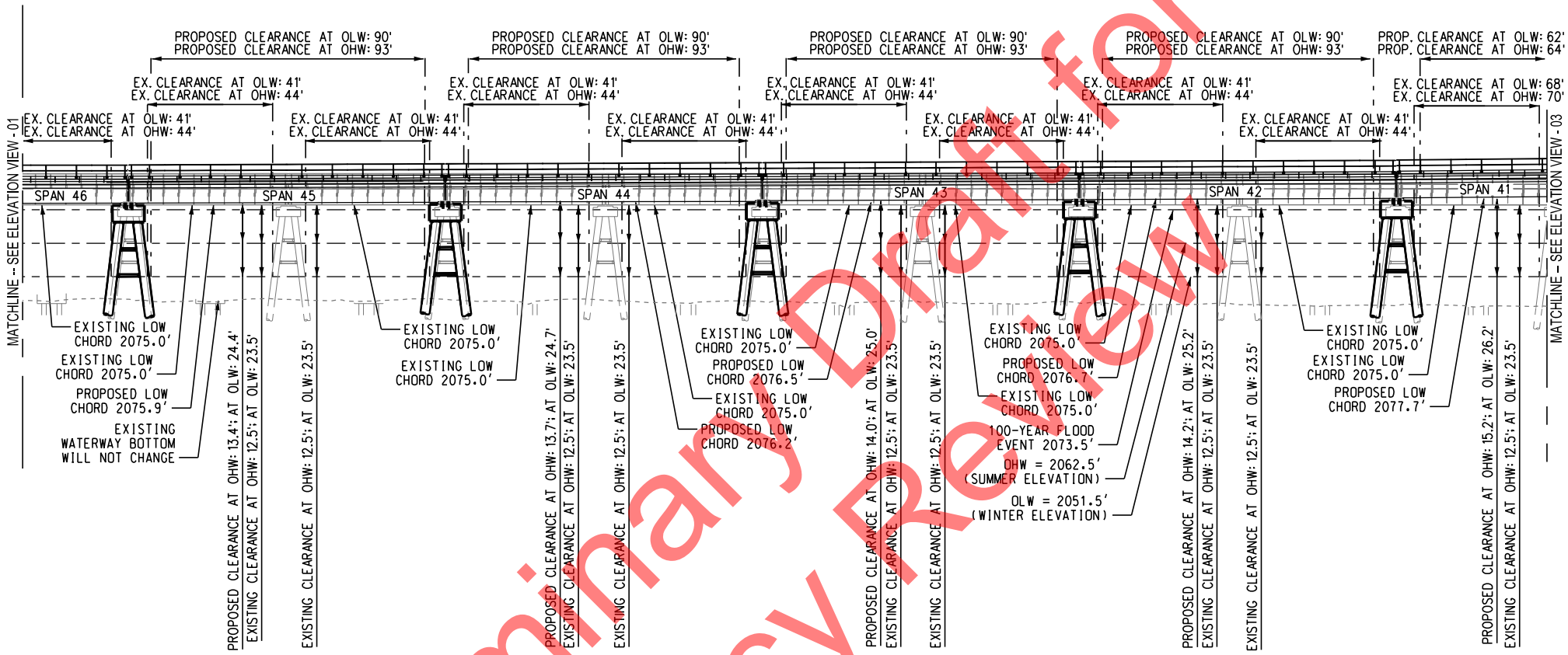

BASED ON: HANSON PROFESSIONAL SERVICES, INC. PRELIMINARY PLANS. ELEVATIONS ARE RELATIVE TO NAVD88. CONCEPTUAL PLANS UTILIZED TO OBTAIN U.S. COAST GUARD BRIDGE PERMIT

Preliminary Draft for Agency Review

LEGEND

- - — - — LIMITS OF NAVIGATIONAL CHANNEL
EXISTING STRUCTURE
PROPOSED STRUCTURE

EXISTING CONDITIONS / PROPOSED WORK

PROJECT: BNSF / SANDPOINT JUNCTION CONNECTOR BRIDGE 3.9
OWNER: BNSF RAILWAY COMPANY
CONSULTANT: JACOBS ENGINEERING GROUP
LOCATION: BNSF BRIDGE 3.9 MONTANA DIVISION, KOOTENAI RIVER SUB, LINE SEGMENT 45, MP 3.9
MILE POINT OF BRIDGE LOCATION FROM MOUTH: 2.7
WATERWAY: LAKE PEND OREILLE
CITY: SANDPOINT **COUNTY:** BONNER **STATE:** IDAHO
DATE: 11/06/2018

11/5/2018 4:49:07 PM $USER$
P:\W3X76600\600DISC\620DESIGN\JARPA\SPJ_CG_BR3-9_Elev-02.dgn

SPOKANE, WA

USCG 08873/27

PROPOSED PERMANENT BRIDGE 3.9
ELEVATION VIEW - 03

SANDPOINT, ID

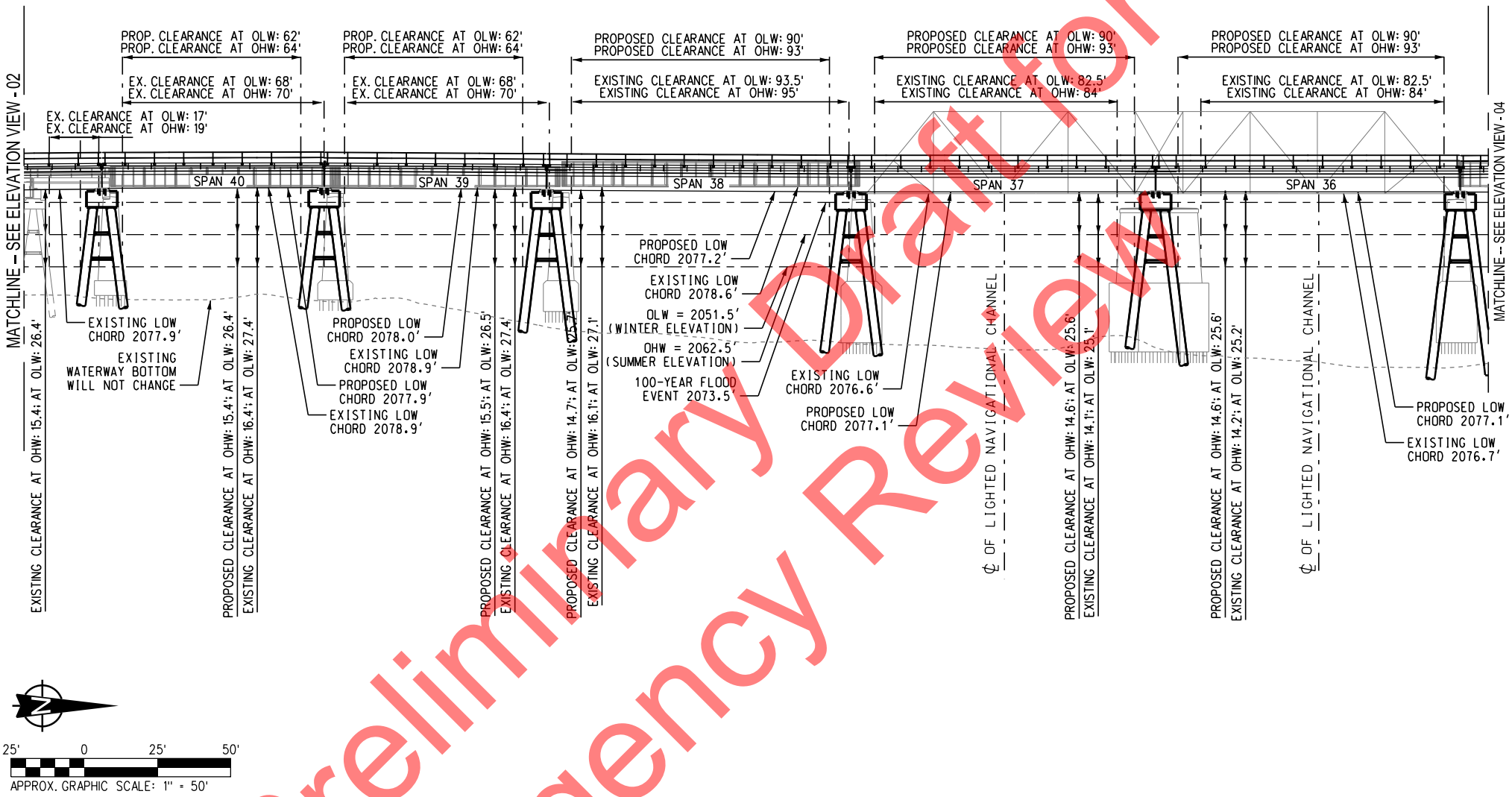

BASED ON: HANSON PROFESSIONAL SERVICES, INC. PRELIMINARY PLANS. ELEVATIONS ARE RELATIVE TO NAVD88. CONCEPTUAL PLANS UTILIZED TO OBTAIN U.S. COAST GUARD BRIDGE PERMIT

LEGEND

- - — - — CENTERLINE OF NAVIGATIONAL CHANNEL

EXISTING STRUCTURE

PROPOSED STRUCTURE

EXISTING CONDITIONS / PROPOSED WORK

PROJECT: BNSF / SANDPOINT JUNCTION CONNECTOR BRIDGE 3.9
OWNER: BNSF RAILWAY COMPANY
CONSULTANT: JACOBS ENGINEERING GROUP
LOCATION: BNSF BRIDGE 3.9 MONTANA DIVISION, KOOTENAI RIVER SUB, LINE SEGMENT 45, MP 3.9
MILE POINT OF BRIDGE LOCATION FROM MOUTH: 2.7
WATERWAY: LAKE PEND OREILLE
CITY: SANDPOINT **COUNTY:** BONNER **STATE:** IDAHO
DATE: 11/06/2018

Preliminary Draft for Agency Review

11/5/2018 4:42:36 PM $USER$
P:\W3X76600\600DISC\620DESIGN\JARPA\SPJ_CG_BR3-9_Elev-03.dgn

PROPOSED PERMANENT BRIDGE 3.9
ELEVATION VIEW - 04

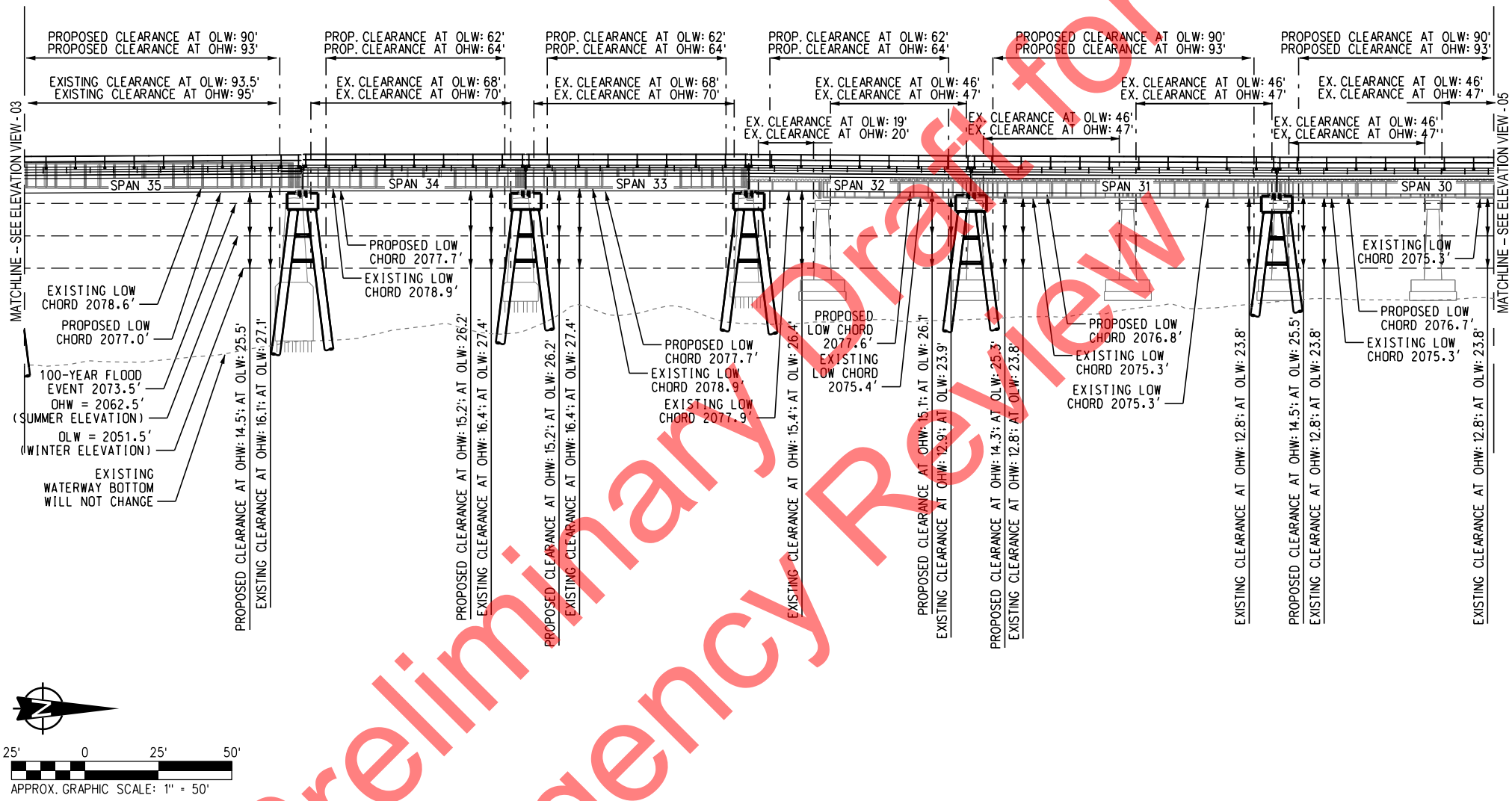

BASED ON: HANSON PROFESSIONAL SERVICES, INC. PRELIMINARY PLANS. ELEVATIONS ARE RELATIVE TO NAVD88. CONCEPTUAL PLANS UTILIZED TO OBTAIN U.S. COAST GUARD BRIDGE PERMIT

LEGEND

- - - - LIMITS OF NAVIGATIONAL CHANNEL
EXISTING STRUCTURE
PROPOSED STRUCTURE

EXISTING CONDITIONS / PROPOSED WORK

PROJECT: BNSF / SANDPOINT JUNCTION CONNECTOR BRIDGE 3.9
OWNER: BNSF RAILWAY COMPANY
CONSULTANT: JACOBS ENGINEERING GROUP
LOCATION: BNSF BRIDGE 3.9 MONTANA DIVISION, KOOTENAI RIVER SUB, LINE SEGMENT 45, MP 3.9
MILE POINT OF BRIDGE LOCATION FROM MOUTH: 2.7
WATERWAY: LAKE PEND OREILLE
CITY: SANDPOINT **COUNTY:** BONNER **STATE:** IDAHO
DATE: 11/06/2018

Preliminary Draft for Agency Review

11/5/2018 4:41:04 PM $USER$
P:\W3X76600\600DISC\620DESIGN\JARPA\SPJ_CG_BR3-9_Elev-04.dgn

SPOKANE, WA

USCG0008893/27

PROPOSED PERMANENT BRIDGE 3.9
ELEVATION VIEW - 05

SANDPOINT, ID

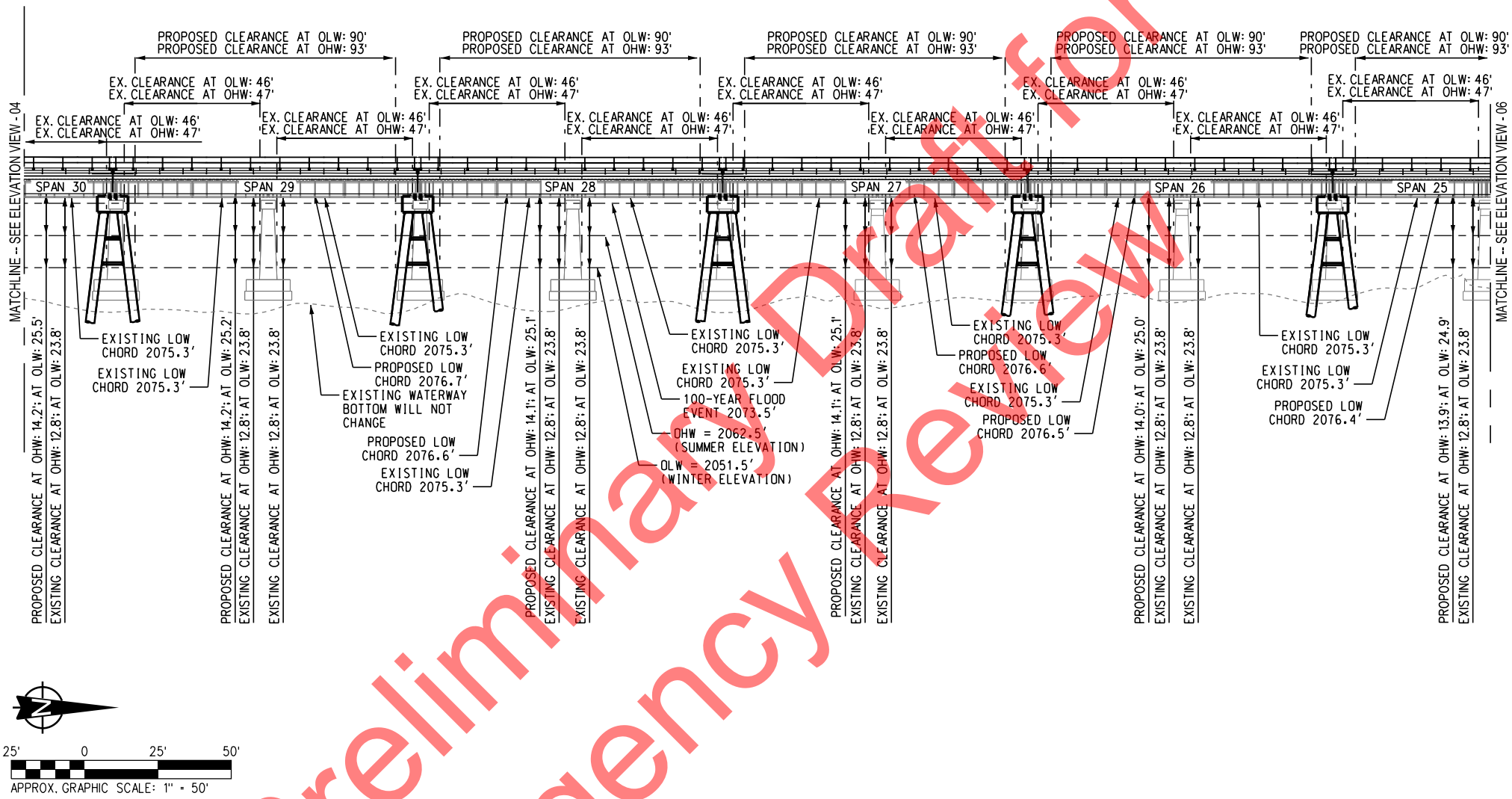

BASED ON: HANSON PROFESSIONAL SERVICES, INC. PRELIMINARY PLANS. ELEVATIONS ARE RELATIVE TO NAVD88. CONCEPTUAL PLANS UTILIZED TO OBTAIN U.S. COAST GUARD BRIDGE PERMIT

LEGEND

- - — - — LIMITS OF NAVIGATIONAL CHANNEL

EXISTING STRUCTURE

PROPOSED STRUCTURE

EXISTING CONDITIONS / PROPOSED WORK

PROJECT: BNSF / SANDPOINT JUNCTION CONNECTOR BRIDGE 3.9
OWNER: BNSF RAILWAY COMPANY
CONSULTANT: JACOBS ENGINEERING GROUP
LOCATION: BNSF BRIDGE 3.9 MONTANA DIVISION, KOOTENAI RIVER SUB, LINE SEGMENT 45, MP 3.9
MILE POINT OF BRIDGE LOCATION FROM MOUTH: 2.7
WATERWAY: LAKE PEND OREILLE
CITY: SANDPOINT **COUNTY:** BONNER **STATE:** IDAHO
DATE: 11/06/2018

Preliminary Draft for Agency Review

11/5/2018 5:57:22 PM $USER$
P:\W3X76600\600DISC\620DESIGN\JARPA\SPJ_CG_BR3-9_Elev-05.dgn

USCG0008903/27

PROPOSED PERMANENT BRIDGE 3.9
ELEVATION VIEW - 06

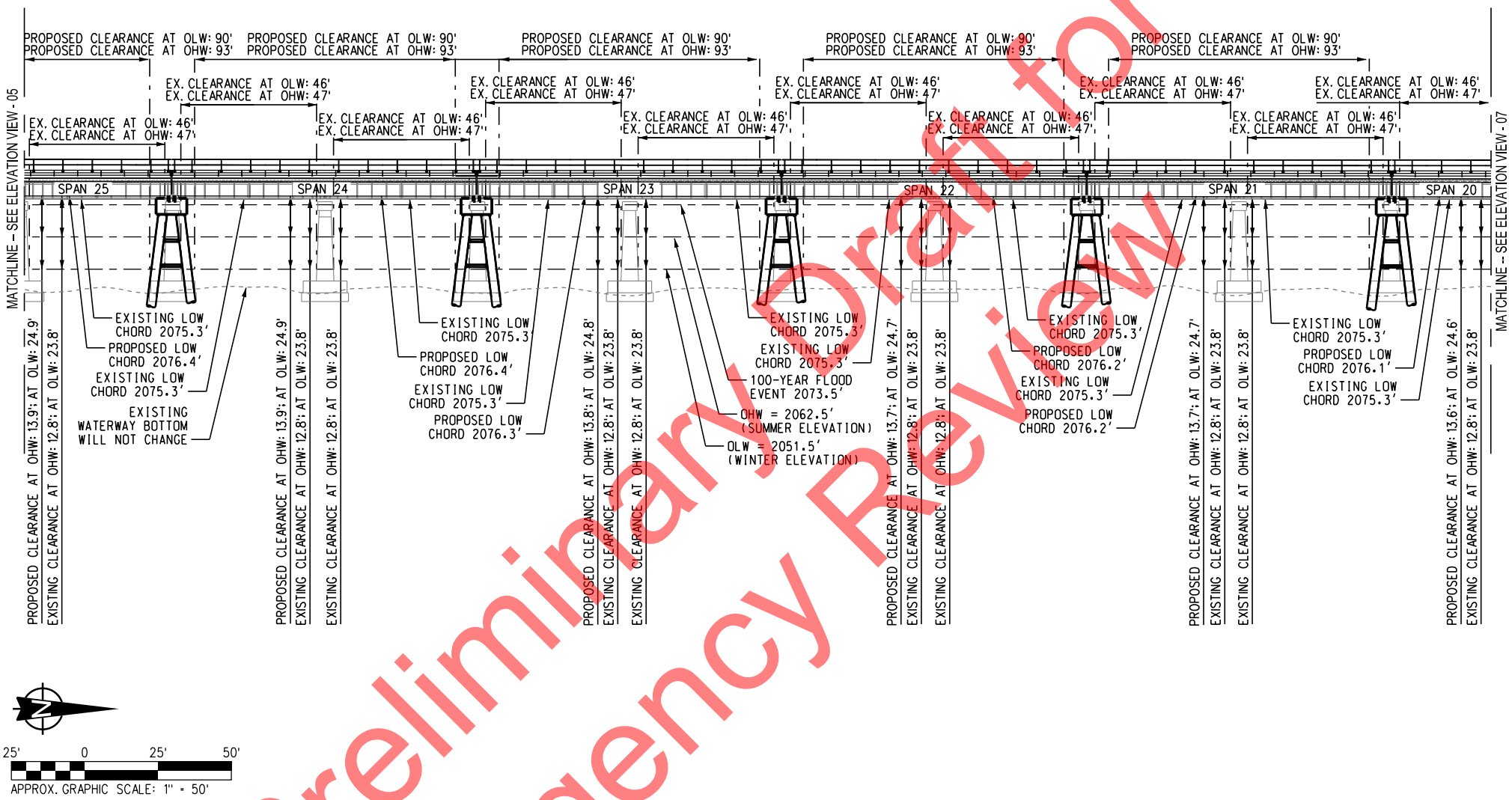

BASED ON: HANSON PROFESSIONAL SERVICES, INC. PRELIMINARY PLANS. ELEVATIONS ARE RELATIVE TO NAVD88. CONCEPTUAL PLANS UTILIZED TO OBTAIN U.S. COAST GUARD BRIDGE PERMIT

LEGEND

- - — - — LIMITS OF NAVIGATIONAL CHANNEL

EXISTING STRUCTURE

PROPOSED STRUCTURE

EXISTING CONDITIONS / PROPOSED WORK

PROJECT: BNSF / SANDPOINT JUNCTION CONNECTOR BRIDGE 3.9
OWNER: BNSF RAILWAY COMPANY
CONSULTANT: JACOBS ENGINEERING GROUP
LOCATION: BNSF BRIDGE 3.9 MONTANA DIVISION, KOOTENAI RIVER SUB, LINE SEGMENT 45, MP 3.9
MILE POINT OF BRIDGE LOCATION FROM MOUTH: 2.7
WATERWAY: LAKE PEND OREILLE
CITY: SANDPOINT **COUNTY:** BONNER **STATE:** IDAHO
DATE: 11/06/2018

Preliminary Draft for Agency Review

11/5/2018 4:53:42 PM $USER$
P:\W3X76600\600DISC\620DESIGN\JARPA\SPJ_CG_BR3-9_Elev-06.dgn

USCG0008913/27

PROPOSED PERMANENT BRIDGE 3.9
ELEVATION VIEW - 07

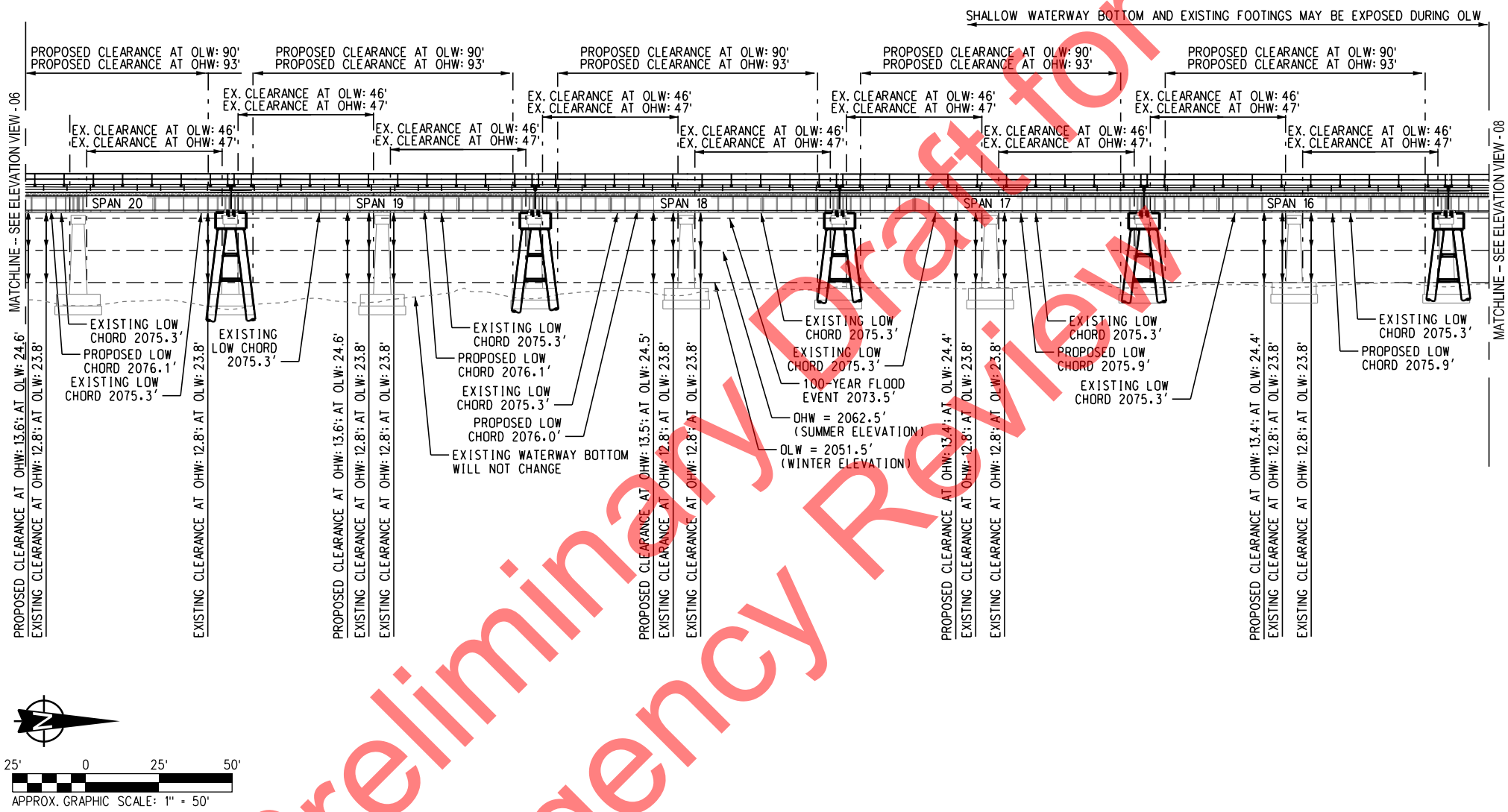

BASED ON: HANSON PROFESSIONAL SERVICES, INC. PRELIMINARY PLANS. ELEVATIONS ARE RELATIVE TO NAVD88. CONCEPTUAL PLANS UTILIZED TO OBTAIN U.S. COAST GUARD BRIDGE PERMIT

LEGEND

- - — - — LIMITS OF NAVIGATIONAL CHANNEL
EXISTING STRUCTURE
PROPOSED STRUCTURE

EXISTING CONDITIONS / PROPOSED WORK

PROJECT: BNSF / SANDPOINT JUNCTION CONNECTOR BRIDGE 3.9
OWNER: BNSF RAILWAY COMPANY
CONSULTANT: JACOBS ENGINEERING GROUP
LOCATION: BNSF BRIDGE 3.9 MONTANA DIVISION, KOOTENAI RIVER SUB, LINE SEGMENT 45, MP 3.9
MILE POINT OF BRIDGE LOCATION FROM MOUTH: 2.7
WATERWAY: LAKE PEND OREILLE
CITY: SANDPOINT **COUNTY:** BONNER **STATE:** IDAHO
DATE: 11/06/2018

Preliminary Draft for Agency Review

11/5/2018 4:56:49 PM $USER$
P:\W3X76600\600DISC\620DESIGN\JARPA\SPJ_CG_BR3-9_Elev-07.dgn

PROPOSED PERMANENT BRIDGE 3.9
ELEVATION VIEW - 08

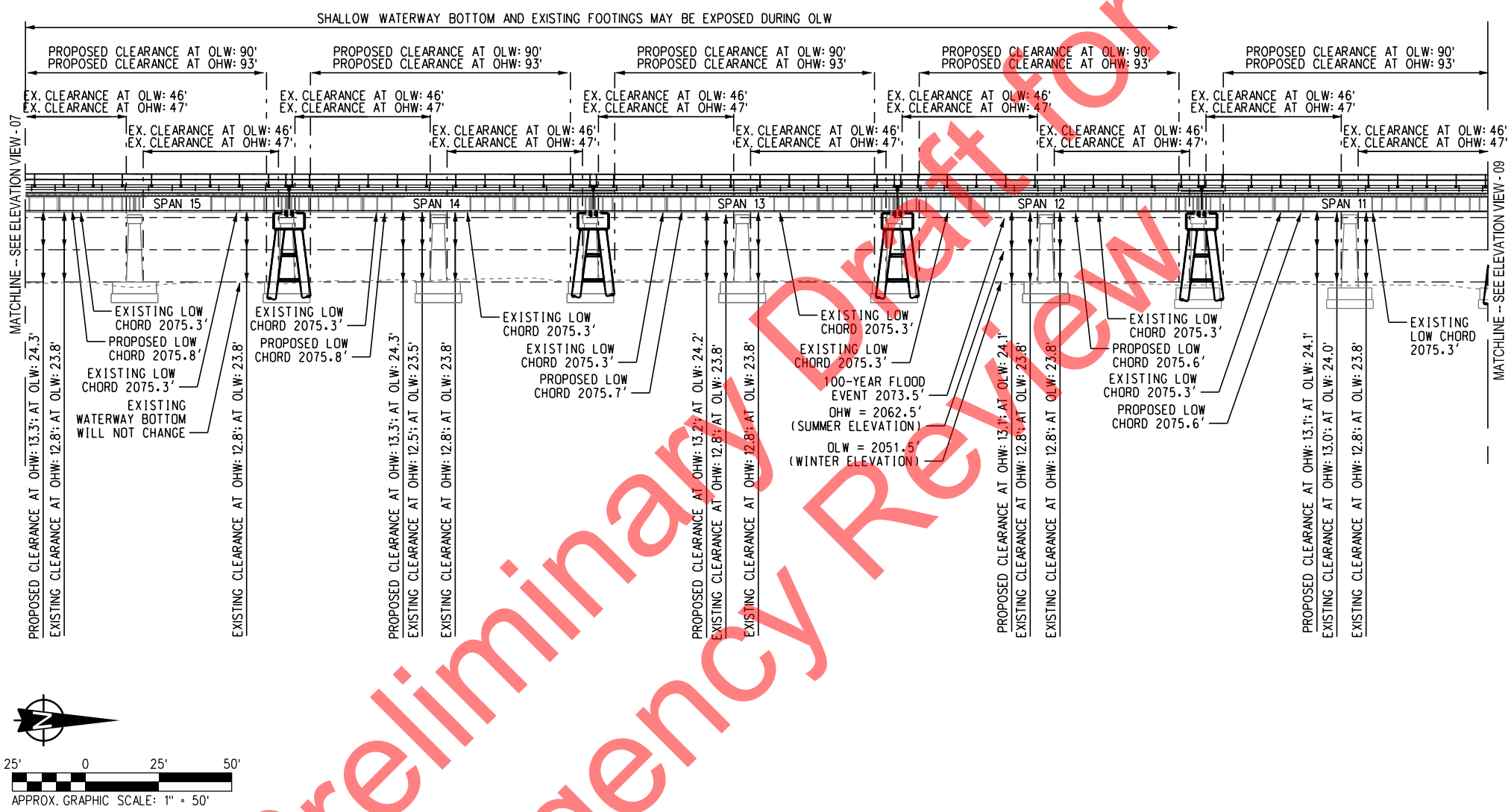

BASED ON: HANSON PROFESSIONAL SERVICES, INC. PRELIMINARY PLANS. ELEVATIONS ARE RELATIVE TO NAVD88. CONCEPTUAL PLANS UTILIZED TO OBTAIN U.S. COAST GUARD BRIDGE PERMIT

LEGEND

- - — - — LIMITS OF NAVIGATIONAL CHANNEL
EXISTING STRUCTURE
PROPOSED STRUCTURE

EXISTING CONDITIONS / PROPOSED WORK

PROJECT: BNSF / SANDPOINT JUNCTION CONNECTOR BRIDGE 3.9
OWNER: BNSF RAILWAY COMPANY
CONSULTANT: JACOBS ENGINEERING GROUP
LOCATION: BNSF BRIDGE 3.9 MONTANA DIVISION, KOOTENAI RIVER SUB, LINE SEGMENT 45, MP 3.9
MILE POINT OF BRIDGE LOCATION FROM MOUTH: 2.7
WATERWAY: LAKE PEND OREILLE
CITY: SANDPOINT **COUNTY:** BONNER **STATE:** IDAHO
DATE: 11/06/2018

Preliminary Draft for Agency Review

11/5/2018 5:00:59 PM $USER$
P:\W3X76600\600DISC\620DESIGN\JARPA\SPJ_CG_BR3-9_Elev-08.dgn

PROPOSED PERMANENT BRIDGE 3.9
ELEVATION VIEW - 09

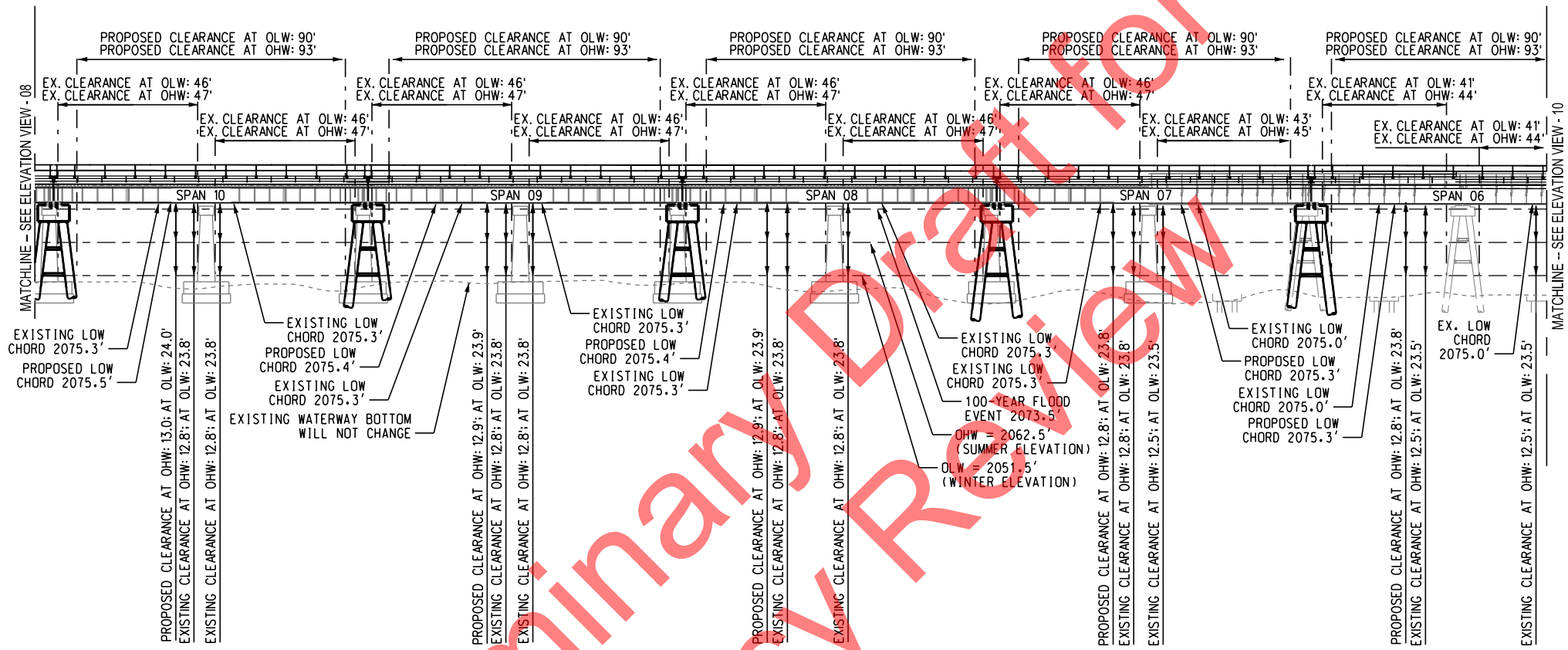

BASED ON: HANSON PROFESSIONAL SERVICES, INC. PRELIMINARY PLANS. ELEVATIONS ARE RELATIVE TO NAVD88. CONCEPTUAL PLANS UTILIZED TO OBTAIN U.S. COAST GUARD BRIDGE PERMIT

LEGEND

- - — - — LIMITS OF NAVIGATIONAL CHANNEL

EXISTING STRUCTURE

PROPOSED STRUCTURE

EXISTING CONDITIONS / PROPOSED WORK

PROJECT: BNSF / SANDPOINT JUNCTION CONNECTOR BRIDGE 3.9
OWNER: BNSF RAILWAY COMPANY
CONSULTANT: JACOBS ENGINEERING GROUP
LOCATION: BNSF BRIDGE 3.9 MONTANA DIVISION, KOOTENAI RIVER SUB, LINE SEGMENT 45, MP 3.9
MILE POINT OF BRIDGE LOCATION FROM MOUTH: 2.7
WATERWAY: LAKE PEND OREILLE
CITY: SANDPOINT **COUNTY:** BONNER **STATE:** IDAHO
DATE: 11/06/2018

Preliminary Draft for Agency Review

11/5/2018 5:04:08 PM $USER$
P:\W3X76600\600DISC\620DESIGN\JARPA\SPJ_CG_BR3-9_Elev-09.dgn

USCG0008943/27

SPOKANE, WA

PROPOSED PERMANENT BRIDGE 3.9
ELEVATION VIEW - 10

SANDPOINT, ID

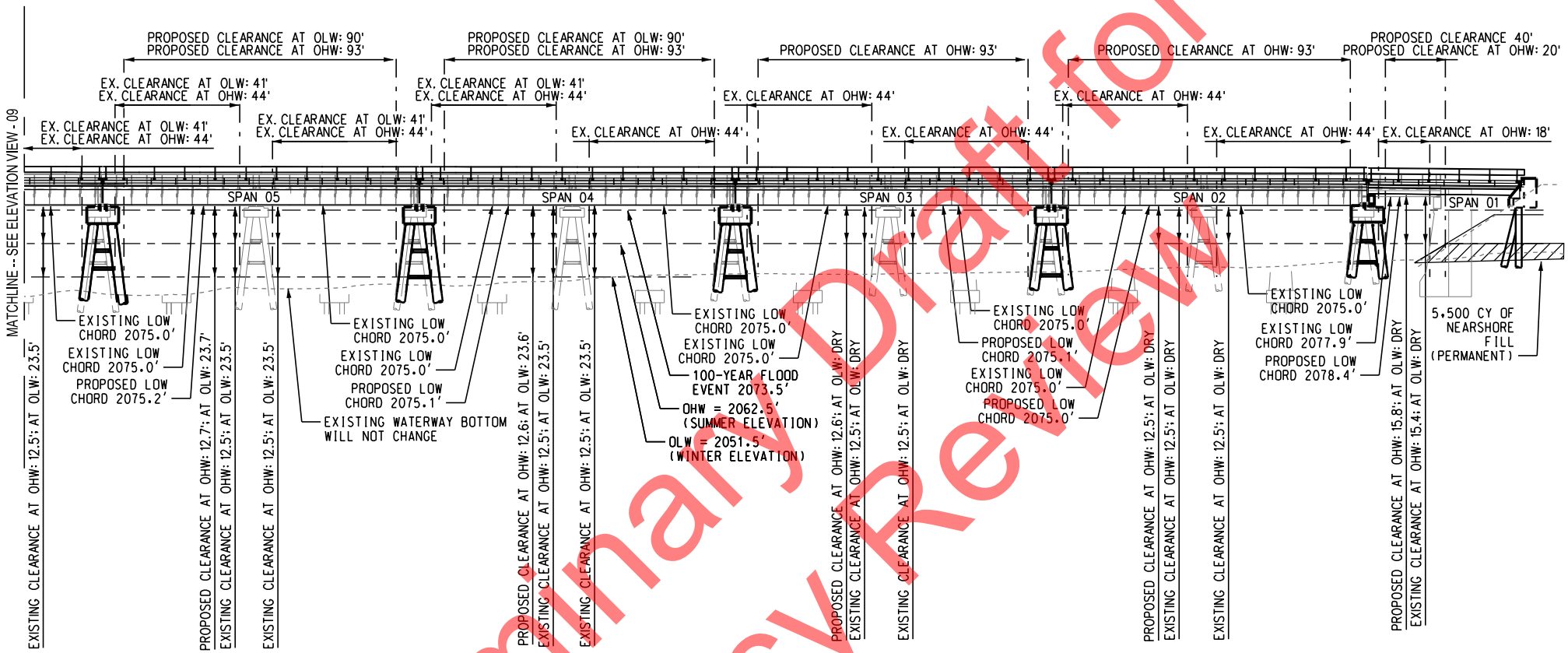

BASED ON: HANSON PROFESSIONAL SERVICES, INC. PRELIMINARY PLANS. ELEVATIONS ARE RELATIVE TO NAVD88. CONCEPTUAL PLANS UTILIZED TO OBTAIN U.S. COAST GUARD BRIDGE PERMIT

LEGEND

- - — - — LIMITS OF NAVIGATIONAL CHANNEL

EXISTING STRUCTURE

PROPOSED STRUCTURE

EXISTING CONDITIONS / PROPOSED WORK

PROJECT: BNSF / SANDPOINT JUNCTION CONNECTOR BRIDGE 3.9
OWNER: BNSF RAILWAY COMPANY
CONSULTANT: JACOBS ENGINEERING GROUP
LOCATION: BNSF BRIDGE 3.9 MONTANA DIVISION, KOOTENAI RIVER SUB, LINE SEGMENT 45, MP 3.9
MILE POINT OF BRIDGE LOCATION FROM MOUTH: 2.7
WATERWAY: LAKE PEND OREILLE
CITY: SANDPOINT **COUNTY:** BONNER **STATE:** IDAHO
DATE: 11/06/2018

Preliminary Draft for Agency Review

11/5/2018 5:08:10 PM $USER$
P:\W3X7660\600DSC\620DESIGN\JARPA\SPJ_CG_BR3-9_Elev-10.dgn

USCG0008953/27

TYPICAL SECTION VIEW

PROPOSED PERMANENT BRIDGE 3.9

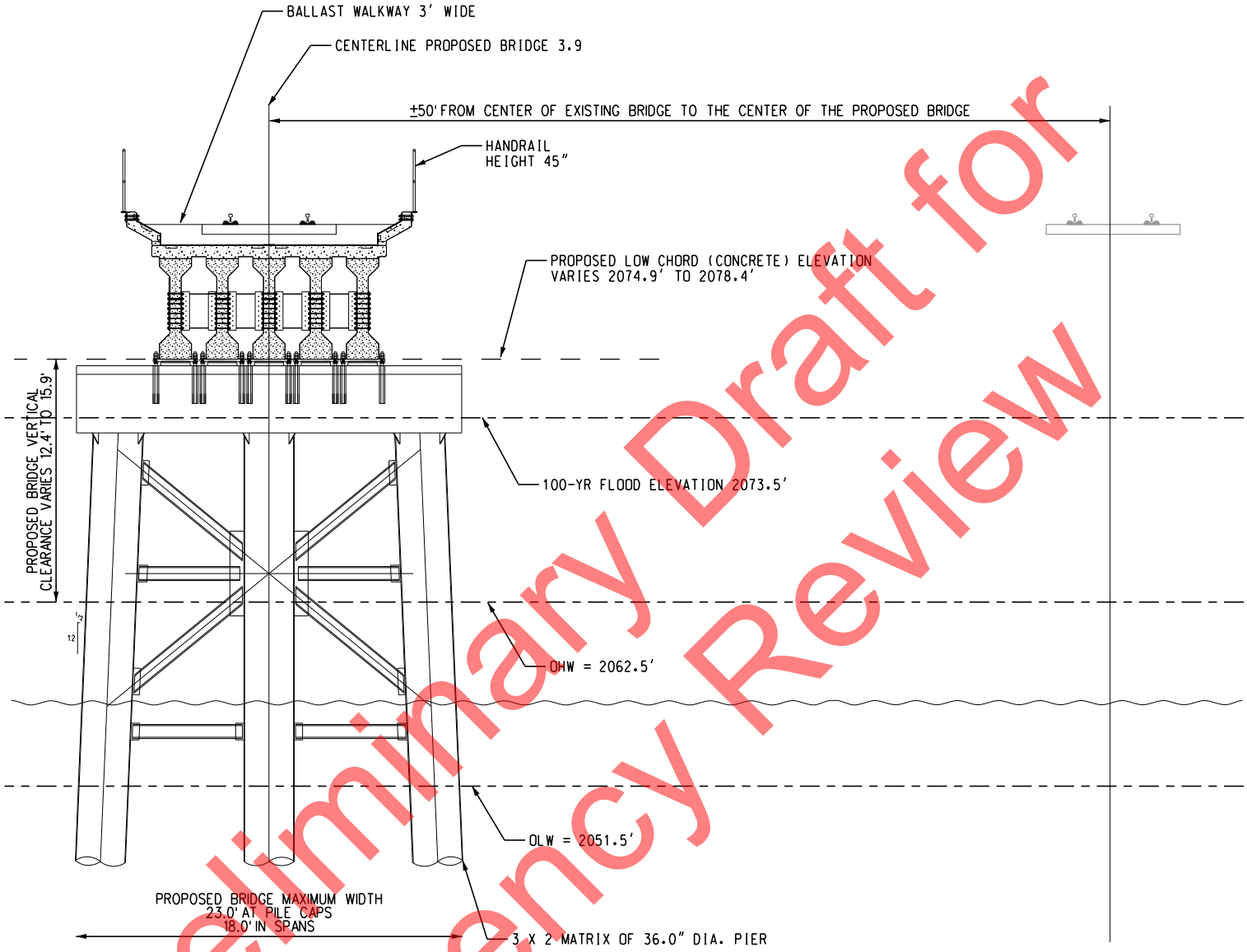

Preliminary Draft for Agency Review

5' 0 5' 10'

APPROX. GRAPHIC SCALE: 1" = 10'

BASED ON: HANSON PROFESSIONAL SERVICES, INC. PRELIMINARY PLANS. ELEVATIONS ARE RELATIVE TO NAVD88. CONCEPTUAL PLANS UTILIZED TO OBTAIN U.S. COAST GUARD BRIDGE PERMIT

EXISTING CONDITIONS / PROPOSED WORK

PROJECT: BNSF / SANDPOINT JUNCTION CONNECTOR BRIDGE 3.9
OWNER: BNSF RAILWAY COMPANY
CONSULTANT: JACOBS ENGINEERING GROUP
LOCATION: BNSF BRIDGE 3.9 MONTANA DIVISION, KOOTENAI RIVER SUB, LINE SEGMENT 45, MP 3.9
MILE POINT OF BRIDGE LOCATION FROM MOUTH: 2.7
WATERWAY: LAKE PEND OREILLE
CITY: SANDPOINT **COUNTY:** BONNER **STATE:** IDAHO
DATE: 11/06/2018

11/5/2018 5:59:20 PM $USER$
P:\187260\600\SCI\620DESIGN\JAPA\SP_CG_BR3.9_TypicalXS.dgn

C. <u>PLAN SHEETS</u> - Plans submitted with the bridge permit application become an official, and permanent, part of the issued permit or permit amendment. <u>To minimize delays, provide the following information:</u>

1. Plan Sheet Checklist - Use the following checklist for specifics to include with bridge plans:

a. **<u>General</u>**

✓ Provide all plans in standard 8 ½ X 11" size, providing the fewest sheets possible that still show significant project structural details. Plan sheets may be submitted electronically.

<u>NOTE</u>: Do not show bridge navigational lighting plans on bridge plan and elevation views.

✓ Show all dimensions and distances in U.S. linear feet in decimal form (versus feet and inches). For international bridges also show all dimensions in both linear feet and meters.

✓ Include the datum used in the plan and elevation view. Use the same datum for all submitted drawings (e.g. NAVD, NGVD). For replacement and modification projects, the datum used may differ between the new plans and the previously approved plans for the existing structure. If this situation occurs, please be sure to show all necessary conversions to demonstrate any change in approved clearances.

Not required at this time All plan sheets must bear the date, signature and stamp of a professional engineer.

<u>NOTE</u>: the engineer stamp date must either match or be dated later than the title block date before the permit and plans can be approved by the Coast Guard.

If desired, it is acceptable for the engineer to add the following statement to the plans, "Conceptual plans utilized to obtain Coast Guard bridge permit".

✓ The total number of plan sheets identified in the title block must match the number of plan sheets submitted for approval.

b. **<u>Title Blocks</u>** - Include the following items in the title blocks (lower right-hand corner on all of the plan sheets):

✓ Applicant/Owner;

✓ Consultant/Agent;

✓ Name of Bridge(s);

✓ Name of Waterway;

✓ Mile point of bridge(s) location (from confluence of mouth of waterway) in

Preliminary Draft for Agency Review

statute miles;

✓ City, county/parish, and state (state whether the bridge(s) is at, near, or between – as appropriate);

✓ Date of plans (i.e., mm/dd/yyyy, must either match or be dated prior to the engineer's date stamp); and

✓ Sheet number and total number of sheets in set to be approved (i.e., Sheet 1 of 5).

c. **Location/Vicinity Map**

✓ Show graphic scale and north arrow;

✓ Show location of bridge(s) on waterway;

✓ Identify the name of the waterway;

✓ Show course of waterway (i.e. ebb/flood, or direction of flow for non-tidal waters);

✓ Show structures immediately adjacent to the proposed bridge(s) and their relation to the proposed bridge(s);

✓ Identify wildlife and waterfowl refuges and any historical and archaeological sites; and

✓ Insert a small map of the state in which the project is located with an arrow showing the location of the proposed project.

d. **Plan View**

✓ Show graphic bar scale and north arrow;

✓ Identify the adjacent property owners at the four corners of the proposed structure(s);

✓ Show existing shorelines (may be defined or established by local or state regulation);

✓ Show ebb and flood in tidal waters and direction of flow in non-tidal waterway;

✓ Show mean high and low waterlines in tidal areas. Show ordinary high water and ordinary low water elevations if proposed activity is in a non-tidal waterway;

✓ Show all portions of existing bridge(s) that will remain in place;

✓ Show all portions of existing bridge(s) that will be removed by using dashed lines;

✓ Show principal dimensions of structure(s) from grade-to-grade. Show length,

Preliminary Draft for Agency Review

width, etc.;

✓ Show location of dredging, excavation, fill or rip-rap, to include approximate number of cubic yards. Note: The Coast Guard does not approve these activities or items. Contact the U.S. Army Corps of Engineers for approval;

✓ Show location of the bridge protective system, piles, cables, etc. existing or to be constructed in the waterway. Identify type of material to be used;

✓ Show limits of navigational channel;

✓ Show axis (centerline) of channel;

✓ Show horizontal clearances, normal to the axis (centerline) of the channel between the bridge protective system, pilings, or abutments;

✓ Show water depth at mean low (or ordinary low if non-tidal) at various locations in the channel, under, upstream and downstream of the bridge(s); and

Not required at this time Show the bridge protective system.

e. **Elevation View**

✓ Show graphic bar scale and north arrow;

✓ Show mean high and mean low water elevations in tidal areas. Show ordinary high and low water elevations in non-tidal areas;

✓ Show amount of fill material in cubic yards below mean high water;

✓ Show horizontal clearance normal to the axis (centerline) of the channel between the bridge protective fender system, pilings, or abutments, as appropriate for navigational channel;

✓ Show vertical clearances referenced to the appropriate high water stage either Mean High Water (MHW) or Ordinary High Water (OHW). Show vertical clearances at the center, as well as at the horizontal limits of the navigational channel (the most restrictive vertical clearance in the navigational channel);

N/A If the bridge(s) will have a draw, show the draw in the open and closed positions. Vertical clearances in the open position might not be unlimited, especially for vertical lift bridges and bascule bridges. For bascule bridges, specify which part of the navigation channel has an unlimited clearance in the open position i.e. the center 50 feet of the channel, etc;

✓ Show proposed navigational envelope (opening);

✓ Show proposed and existing contour of waterway bottom;

✓ Show 100-year flood elevation;

Preliminary Draft for Agency Review

✓ Show the location and elevation of the low steel member of the navigation span; and

N/A If the bridge(s) will have a permanent traveler system installed for inspection/maintenance, show the reduction in vertical clearance (traveler height below low steel) and the location of traveler storage when not in use.

f. **Typical Section View**

✓ Show graphic bar scale;

✓ Show out-to-out width of the structure(s). (This is the width of the bridge(s) at its widest point.); and

✓ Include location and dimensions of travel lanes, shoulders, sidewalks, fishing/pedestrian platforms, railings, pipelines, etc.

g. **Details of the Bridge Protective System** (if details are known and ready for CG approval as part of the permit decision)

Not required at this time

Show bridge pier protective system in plan and elevation views including detail of attachment to pier, countersunk bolts, and relationship to mean high and low waterlines (on elevation view).

Submitted Separately

h. **Temporary Structures/Falsework** (if details are developed and ready for CG approval as part of the permit decision)

____ Show temporary structures/falsework;

____ Show existing bridge(s) to be removed using dashed lines; and

____ Show minimum horizontal and vertical clearances during construction.

Preliminary Draft for Agency Review

Appendix B

Site Photographs

Preliminary Draft for Agency Review

Photo 1:
Bridge 3.9 – View of Bridge from West side looking Southeast

Photo 2:
Bridge 3.9 – Close-up view of South end of Bridge

Photo 3:
Bridge 3.9 – Close-up view of North end of Bridge

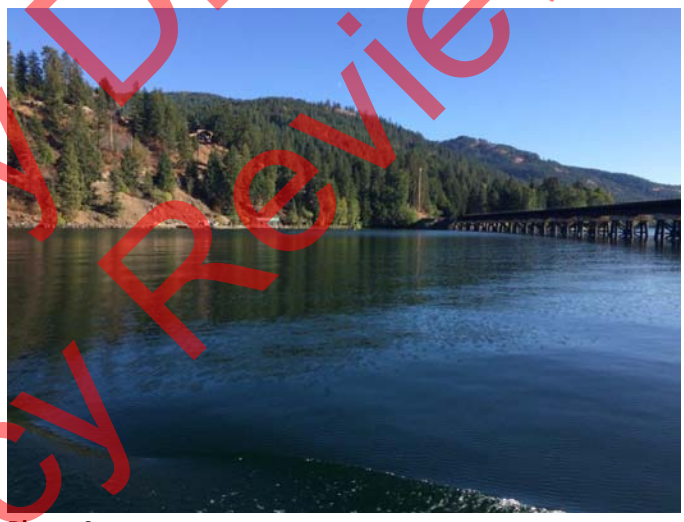

Photo 4:
Bridge 3.9 – View of Bridge from East side looking South

Preliminary Draft for Agency Review

Photo 5:
Bridge 3.1 – View of Bridge from the West side looking East

Photo 6:
Bridge 3.1 – View of Bridge from East side looking West

Photo 7:
Bridge 3.0 – View of Bridge from West side looking East

Preliminary Draft for Agency Review

Photo 8:
Bridge 3.9 – Conceptual Rendering

Photo 9:
Bridge 3.1 – Conceptual Rendering

Photo 10:
Bridge 3.0 – Conceptual Rendering

Preliminary Draft for Agency Review

Appendix C

Wetlands and Waters of the U.S. Delineation Report

Preliminary Draft for Agency Review

JACOBS

WETLANDS AND WATERS OF THE U.S. DELINEATION REPORT - BNSF SANDPOINT JUNCTION CONNECTOR PROJECT

BNSF Montana Division, Kootenai River Subdivision,
Line Segment 45, MP 2.9 +/- to 5.1+/-
Bonner County, Idaho

November 29, 2017

UPDATED 10/17/2018

Preliminary Draft for Agency Review

Sue Platte, Biologist

Jacobs Engineering Group Inc.
Environmental Services
101 North Fourth Avenue, Suite 203
Sandpoint, ID 83864
T +1.208.263.9391
F +1.208.263.7013
www.jacobs.com

© Copyright 2018 Jacobs Engineering Group Inc. The concepts and information contained in this document are the property of Jacobs.

Limitation: This report has been prepared on behalf of, and for the exclusive use of Jacobs' Client, and is subject to, and issued in accordance with, the provisions of the cor between Jacobs and the Client.

Contents

Executive Summary 1
1. Introduction 2
2. Proposed Project 3
2.1 Location 3
2.2 Purpose and Project Description 3
3. Methods 4
4. Existing Conditions 5
4.1 Landscape Setting 5
4.1.1 National Wetland Inventory 9
4.1.2 Soils 9
4.1.3 Vegetation 9
4.1.4 Hydrology 10
4.2 Waters of the U.S / Wetlands 11
4.2.1 Waters of the US Assessment Summaries 12
4.2.2 Wetland Functions and Values 14
5. References 16

Table 1. Information Summary of Sand Creek in the Study Area
Table 2. Information Summary of Lake Pend Oreille in the Study Area
Table 3. Information Summary of Wetland A in the Study Area
Table 4. Functions and Values of the Delineated Wetland A

Appendix A – Reference Maps (Aerial, USGS, NRCS Soil Survey, NWI, and FEMA)

Appendix B – Forms / Plant List (Corps Wetland Delineation Data Forms, MDT Montana Wetland Rating Form, and Study Area Plant List)

Preliminary Draft for Agency Review

Executive Summary

The BNSF Railway Co. (BNSF) proposes to construct a 2.2-mile-long second mainline track west of the existing BNSF mainline to connect the North Algoma Siding track (MP 5.1) south of Sandpoint, to the Sandpoint Junction switch (MP 2.9), where the BNSF and the Montana Rail Link (MRL) mainlines converge in Sandpoint, Idaho. The project includes the construction of a new track west of the existing mainline track with two new bridges over Sand Creek and Lake Pend Oreille, Bridge 3.1 and Bridge 3.9, respectively.

The project will require review and permitting by:

Section 404/Section 10 - Department of the Army, Walla Walla Regulatory Corps District (Corps)

- Section 404
  - Bridge 3.1 Over Sand Creek
    - 0.05 acres temporary nearshore impact (north end)
    - 0.28 acres permanent wetland fill (south end)
  - Bridge 3.9 Over Lake Pend Oreille
    - 0.30 acres temporary nearshore fill (north end)
    - 0.57 acres permanent nearshore fill (north end)
    - 0.03 acres temporary nearshore fill (south end)
    - 0.01 acres permanent nearshore fill (south end)
- Section 10 and Section 404
  - Algoma Switch (south end of project)
    - 0.29 acres permanent nearshore fill

Section 9 - US Coast Guard, Thirteenth District (USCG)

- Bridge 3.1 Over Sand Creek
  - 0.05 acres temporary nearshore impact (north end)
  - 0.01 acres temporary nearshore impact (south end)
  - New bridge
- Bridge 3.9 Over Lake Pend Oreille
  - 0.30 acres temporary nearshore fill (north end)
  - 0.57 acres permanent nearshore fill (north end)
  - 0.03 acres temporary nearshore fill (south end)
  - 0.01 acres permanent nearshore fill (south end)
  - New bridge

Non-Navigational Encroachment Permit – ID Department of Lands (IDL)

- Bridge 3.1 Over Sand Creek
  - New bridge
- Bridge 3.9 Over Lake Pend Oreille
  - New bridge

Preliminary Draft for Agency Review

1. Introduction

This report identifies and describes wetland and stream resources in the study area in order to:

1. Avoid and minimize impacts to wetlands and streams during the design process;
2. Formally document wetland and stream boundaries for jurisdictional determination concurrence by regulatory agencies; and
3. Provide information to facilitate regulatory permitting.

The study area is identified as being within the 200-foot right-of-way (ROW) of the BNSF tracks from MP 2.9+/- to MP 5.1+/- (**refer to Appendix A – Reference Maps**). The work limits associated with construction of the second mainline track are within this area.

Jacobs' Biologist, Sue Platte, performed a wetland delineation of the study area in May 2015 and on September 25, 2017. The wetland delineated within the study area (Wetland A) occurs between the rail grade and the pedestrian path north of the Sand Creek Bridge 3.1. Most of this wetland bottom is just below 2062.5-foot OHWM, but retains wetland characteristics year round and is not navigable, so it is defined as having Corps-only jurisdiction.

Preliminary Draft for Agency Review

2. Proposed Project

2.1 Location

The project is located in the BNSF Montana Division, Kootenai River Subdivision, Line Segment 45, from Milepost 2.9+/- to 5.1+/- in Bonner County, Idaho; in portions of Sections 15, 22, 23, 25, 26, and 36, Township 57 North, Range 2 West, Boise Meridian; and is partially within the City of Sandpoint. Latitudinal and longitudinal coordinates for the north end (MP 2.9) of the project are 48°16'54.10"N, 116°32'49.35"W, and for the south end (MP 5.1) are 48°14'56.24"N, 116°31'24.02"W (**refer to Appendix A – Reference Maps**).

2.2 Purpose and Project Description

The project work consists of the following key elements or actions:

1. A new mainline track west of the existing BNSF mainline track;
2. Track, switch and signal upgrades;
3. A new bridge over LPO (Bridge. 3.9) adjacent to (west of) the existing rail bridge;
4. A new bridge over Sand Creek (Bridge 3.1) adjacent to (west of) the existing rail bridge;
5. A new bridge over Bridge Street (Bridge 3.0) adjacent to (west of) the existing rail bridge;
6. 0.88-acre of permanent and 0.38-acre of temporary nearshore fill below the jurisdictional OHWM of 2062.5 feet, associated with bridge abutments and the south switch; and
7. 0.28-acre of wetland fill in one location between the rail grade and the pedestrian path south of the Sand Creek Bridge 3.1.

The project need is based on continued growth of freight rail service demands in the northern tier, high-volume traffic corridor between the Midwest (Chicago Terminus) and the West Coast. The existing single mainline and portions of the over-water rail bridges date from the early 1900s. Rail traffic volumes have risen steadily for the past three decades resulting in this portion of the interstate main line becoming a constraint to interstate commerce. The proposed project will relieve system congestion, back-up of rail traffic, and reduce hold times on sidings and wait times at grade crossings both locally and regionally.

Preliminary Draft for Agency Review

3. Methods

Wetlands and other natural habitats within the study area were determined and delineated based on a professional field evaluation of vegetation, hydrology, and soils in conjunction with data from the following resources (**refer to Appendix A – Reference Maps**):

- USFWS National Wetland Inventory (NWI) map
- USGS 7.5 minute Topographic Survey Quad map
- Topographic surveys from the project design engineer (Hanson Professional Services)
- USGS Hydrography and StreamStats Mapping (for drainage analysis)
- FEMA Flood Insurance Rate Map (FIRM)
- NRCS Bonner County Soil Survey
- NRCS Bonner County Hydric Soils List
- Publicly available aerial photography
- Google Earth Pro Mapping™ Program

Jurisdictional areas were identified and delineated, and wetland functions and values were assessed in the study area, using the routine approach described in the *Regional Supplement to the Corps of Engineers Wetland Delineation Manual: Western Mountains, Valleys, and Coast Region* (Version 2.0), May 2010; and the *MDT Montana Wetland Assessment Method, 2008* (Burglund, and McEldowney, 2008).

Formal sampling plots were established within the study area to determine whether there was a prevalence of hydrophytic vegetation. The "50/20 Rule" was utilized during this review. Vegetation is considered hydrophytic (adapted to wet conditions) when over 50% of the dominant plant cover plus 20% or more of species-specific plant cover has a wetland indicator status of facultative (FAC), facultative wetland (FACW), or obligate (OBL).

Boundaries of jurisdictional areas within the study area were delineated with sequentially numbered flags/stakes. Jurisdictional areas on either side of the track within the 200-foot BNSF ROW were then calculated using computer-aided design (CAD) software.

Preliminary Draft for Agency Review

4. Existing Conditions

4.1 Landscape Setting

The study area vicinity is within Hydrological Unit Code (HUC) 17010214–Pend Oreille Lake. Land use in the area within the City of Sandpoint is Urban Residential and Transportation Corridor. At the north end of the project from BNSF MP 2.9 – 3.9, the existing tracks are surrounded by the BNSF maintenance road, the Sandpoint Amtrak Depot, and US Highway 95 to the west; and Sandpoint Avenue, Seasons of Sandpoint condominiums, Best Western Edgewater Resort, Sandpoint Edgewater RV Park, and a portion of the Sandpoint City Beach Marina to the east. BNSF Bridge 3.0 spans over Bridge Street in Sandpoint, BNSF Bridge 3.1 spans over Sand Creek in Sandpoint, and BNSF Bridge 3.9 spans over the open water of Lake Pend Oreille from MP 3.9 to 4.9. The south end of the project from BNSF MP 4.9 – 5.1 is designated as Rural (5) residential (Bonner County, 2017).

The average annual precipitation is about 32 inches and average annual air temperature is about 45^0 F. The majority of precipitation occurs as winter snowfall and spring rain. High-volume runoff occurs during spring snowmelt and major rain-on-snow events (IDL, 2003).

Sandpoint lies on the shores of Idaho's largest lake, 43 mile-long Lake Pend Oreille, and is surrounded by three major mountain ranges, the Selkirk, Cabinet and Coeur d'Alene ranges.

Existing environmental conditions found in the study area consist of the following from north to south:

- from BNSF MP 2.9 – 3.05 (**refer to Figure 1**), the BNSF track, the BNSF access road, BNSF Bridge 3.0 over Bridge Street, and either bare ground or disturbed upland grasses on both sides of the track from the Sandpoint Junction switches at MP 2.9, south to the riparian area associated with Sand Creek, just north of BNSF Bridge 3.1 Bridge at MP 3.05;
- from MP BNSF 3.05 – 3.14 (**refer to Figure2**), The OHWM of Sand Creek with riparian vegetation is on both sides of the track situated between the Sandpoint City Beach Marina and US Highway 95;
- from BNSF MP 3.1-3.14 is the BNSF Bridge 3.1 over Sand Creek (**refer to Figure 2**);
- from BNSF MP 3.14 – 3.15 (**refer to Figure 2**), a small wetland area (Wetland A) is on the west side of the track (between the track and the pedestrian path) with riparian, scrub-shrub, and open water wetland vegetation, and the OHWM of Lake Pend Oreille with riparian vegetation is on the east side of the track;
- from BNSF MP 3.15 – 3.4 (**refer to Figure 2**), the BNSF access road with sparse, disturbed upland grasses is on the west side of the track, and the OHWM of Lake Pend Oreille with riparian vegetation on the east side of the track;
- from BNSF MP 3.4 – 3.9 (**refer to Figure 3**), the OHWM of Lake Pend Oreille with riparian vegetation is on both sides of the track and a public beach ("Dog Beach") is on the west side of the track;
- from BNSF MP 3.9 – 4.89 (**refer to Figure 3**), the BNSF Bridge 3.9 spans over Lake Pend Oreille, surrounded by open water;
- from BNSF MP 4.89 – 4.9 (**refer to Figure 3**) at the south end of BNSF Bridge 3.9, the OHWM of Lake Pend Oreille with riparian vegetation is on both sides of the track;

Preliminary Draft for Agency Review

- from BNSF MP 4.9 to 5.0 (**refer to Figure 3**), upland forest is on the east side of the track and a BNSF access road is on the west side; and
- from BNSF MP 5.0 to 5.1(**refer to Figure 3**), the OHWM of Lake Pend Oreille with riparian vegetation is on the west side of the track and upland forest is on the east side.

Figure 1: North End of Study Area (BNSF MP 2.9 - 3.05)

View of the north end of study area near from BNSF MP 2.9 – 3.05. The BNSF track is surrounded by the BNSF access road, Highway 95, the Railroad Depot, and Sand Creek to the west; and the City of Sandpoint's Lake Pend Oreille Water Treatment Plant, Season's Resort, Best Western Edgewater Resort, and Lake Pend Oreille to the east.

Preliminary Draft for Agency Review

Figure 2: Center of Study Area (BNSF MP 3.05 – 3.4)

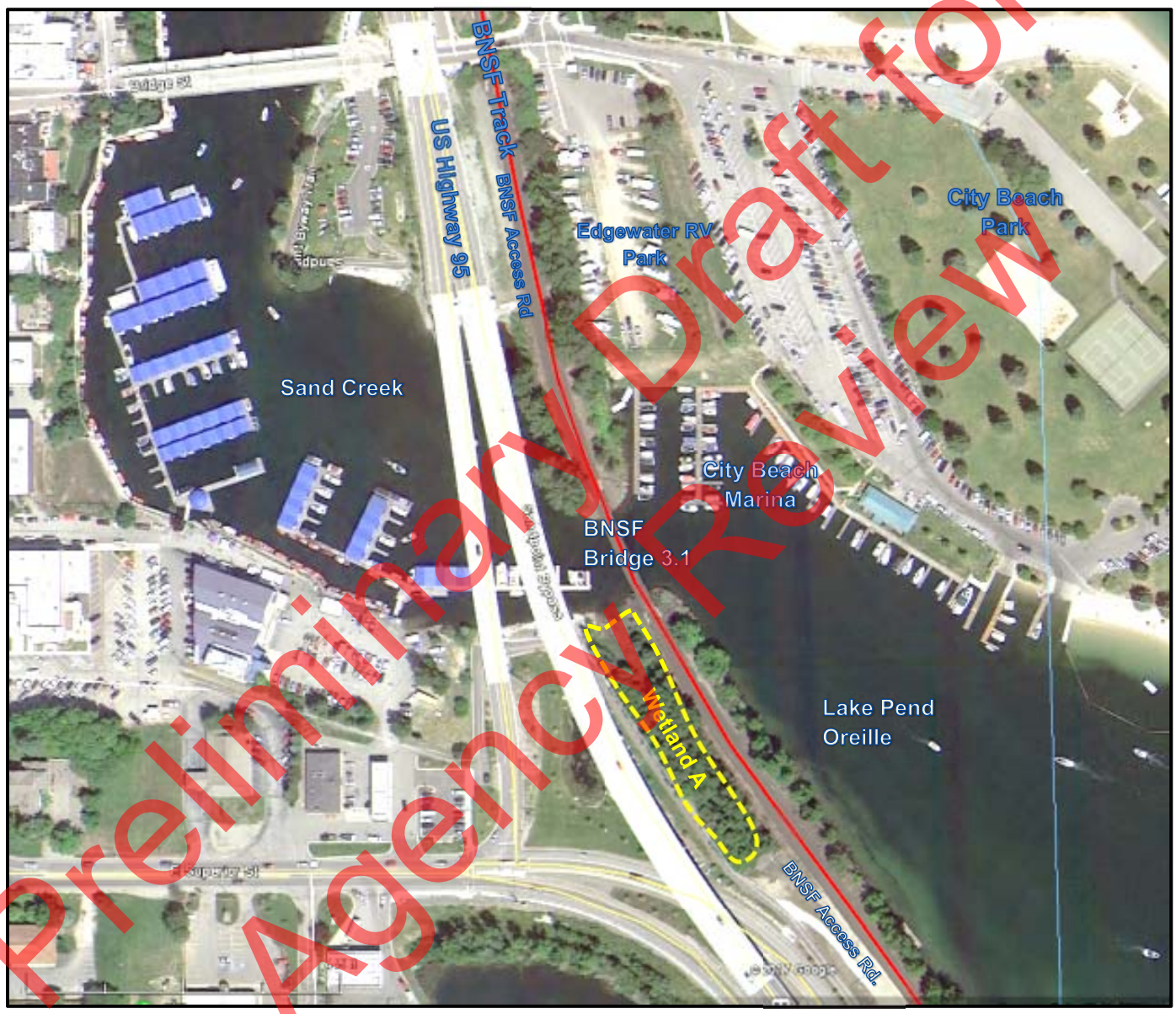

Preliminary Draft for Agency Review

View of the center of the study area from BNSF MP 3.05 – 3.4. The BNSF track is surrounded by the BNSF access road, Highway 95, Wetland A and the Edgewater Resort, City Beach Marina, and Lake Pend Oreille to the east. BNSF tracks cross over Sand Creek at BNSF Bridge 3.1.

Figure 3: South End of Study Area (BNSF MP 3.4 -5.1)

View of the south end of the study area from from MP 3.4 – 5.1. The BNSF track is surrounded by the pedstrian path, "Dog Beach", and US 95 to the west; Lake Pend Oreille exists to the east; and the BNSF Bridge 3.9 spans over Lake Pend Oreille. At the south end of the study area, upland forest exists on the east side of the track, and a BNSF access road and the OHWM of Lake Pend Oreille with riparian vegetation exists on the west side of the track.

Preliminary Draft for Agency Review

4.1.1 National Wetland Inventory

The NWI for the study area did not identify any wetlands, but mapped Lake Pend Oreille as L2UBH (lacustrine, littoral, unconsolidated bottom, permanently flooded).

4.1.2 Soils

Two levels of information were used to define the soils in the study area: preliminary research using the published data in the Bonner County Soil Survey [including information obtained from the Web Soil Survey (NRCS)], and site-specific soil evaluations at the wetland field data points. The Soil Survey of Bonner County, Idaho (USDA, 2006) mapped two soil series in the study area: (31) Mission silt loam, 0 to 2 percent slopes, and (35) Pend Oreille silt loam, 5 to 45 percent slopes (see Appendix A: Resource Mapping for Soil Survey Map, and Appendix B for Wetland Data Forms).

The northern portion of the study area is mapped as (31) Mission silt loam, 0 to 2 percent slopes. The Mission series consists of somewhat poorly drained soils on terraces and terrace escarpments that formed in glaciolacustrine sediments with a mantle of volcanic ash and loess. Permeability is very slow. This soil is on the Bonner County Hydric Soils List for having inclusions of hydric soil in depressions.

The southern portion of the study area near MP 5.0 is mapped as (35) Pend Oreille silt loam, 5 to 45 percent slopes and (28) Lenz-Rock outcrop association, 30 to 65 percent slopes. The Pend Oreille series consists of very deep, well drained soils on mountain slopes, foothills, outwash terraces and lateral moraines, formed in glacial till with a thick mantle of volcanic ash. Permeability is moderate in the upper part and moderately rapid below. The Lenz series consists of moderately deep, well-drained soils formed in material weathered from gneiss, schist, and granite, with small amounts of loess and volcanic ash in the upper part; formed on mountain and foothill side slopes. These soils are not on the Bonner County Hydric Soils List.

The upland soils examined onsite generally displayed the following profiles: 10YR 3/3 sandy silt loam with no redoximorphic features. The wetland soil generally displayed the following profiles: very dark brown dark grayish brown 10YR 3/2 silt loam with 10YR 4/6 mottles or redoximorphic features (refer to Appendix B).

4.1.3 Vegetation

Disturbed upland herb vegetation in the study area include species such as cheatgrass, common mullein, timothy, orange hawkweed, perennial ryegrass, rush skeletonweed, spotted knapweed, and western panicgrass, and western wheatgrass (refer to Appendix B, Study Area Plant List).

The riparian vegetation of Sand Creek and Lake Pend Oreille includes emergent species such as reed canarygrass, stinging nettle, smooth brome, and starry false Solomon's seal; and scrub-shrub and forested species such as black cottonwood, red alder, blue elderberry, Rocky Mountain maple, Scouler's willow, redosier dogwood, Nootka rose, Pacific ninebark, trailing blackberry, and Douglas spirea.

Wetland vegetation in the one study area wetland (Wetland A) includes riparian species previously noted, as well as species in the inundated portion of the wetland such as common cattail, common duckweed, and panicled bulrush.

Preliminary Draft for Agency Review

The upland forested vegetation in the study area includes species such as Douglas fir, lodgepole pine, ponderosa pine, western hemlock, western larch, and western red cedar; and is often mixed with an understory of American trailplant, common snowberry, Nootka rose, queencup beadlily, and Oregon boxleaf.

4.1.4 Hydrology

Wetland A

Wetland hydrology was evaluated at the Wetland A (WL-A) data plots in the study area. Evaluation of hydrology included observation of surface water, soil saturation, groundwater depth, ponding, or evidence of drainage patterns. Study area wetland hydrology includes precipitation, adjacent area runoff, and seasonal overflow from Sand Creek.

Lake Pend Oreille

Lake Pend Oreille is the main hydrologic feature in the study area and is the fifth deepest lake in the United States, with a mean depth of 538 feet, a maximum depth of 1152 feet at its southern end, and a surface area of 94,720 acres. It is fed by streams originating in the Selkirk Mountains to the northwest, the Cabinet Mountains to the northeast, and the Coeur d'Alene Mountains to the east, which comprise most of the largely undeveloped, steep rocky terrain of the shoreline and littoral zone. The remaining littoral zone at the lake's northern end and bays consists of gradual or moderately sloping bottom, surrounded by generally flat to gently sloping uplands and floodplain.

The Clark Fork River, originating in western Montana, is the largest tributary into the lake providing 92% of the lake's inflow at the river's mouth near the City of Clark Fork. Three hydroelectric dams were constructed from 1913 to 1959 (Cabinet Gorge, Noxon, and Thompson Falls Dams), creating a series of impoundments on the lower Clark Fork River.

Lake Pend Oreille outlets to the Pend Oreille River near the City of Dover. The river flows west into eastern Washington, then to Canada, where it joins the Upper Columbia River. The Pend Oreille River is impounded by the Albeni Falls hydroelectric dam, constructed in 1955 near the Idaho/Washington border, which regulates the lake's surface elevation/pool at 2062.5 feet from mid-June through September, and 2051 to 2056 feet from October through May.

Lake Pend Oreille lies in the Purcell Trench, a deep glacially carved, u-shaped valley separating the Selkirk Mountains to the northwest, the Cabinet Mountains to the north and east, and the Coeur d'Alene Mountains to the east and south. Much of the lake's shoreline is steep rock cliffs, and the remainder of the lake's perimeter is a combination of shifting river deltas, floodplains, and relict glacial deposits. Lake Pend Oreille is listed as Category 4a for total phosphorus; with a TMDL that was approved in 2008, and is listed as Category 5 in need of a TMDL for mercury impairment (IDEQ, 2017).

A wide diversity of fish species are present in LPO. The native fish present are westslope cutthroat trout, bull trout, mountain whitefish, pygmy whitefish, slimy sculpin, peamouth, northern pikeminnow, redside shiner, longnose sucker, and largescale sucker. Non-native sport fish that have been stocked or found their way into the lake over the years include kokanee, rainbow trout, Gerrard-strain rainbow trout, lake whitefish, lake trout, smallmouth bass, and several other species present in low abundance including northern pike, brown trout, largemouth bass, yellow perch, and walleye (McCubbins, 2016).

Preliminary Draft for Agency Review

Sand Creek

The Sand Creek drainage generally flows from north to south, with elevation ranging from 5,710 feet at its headwaters north of Sandpoint to 2062.5 feet (summer) or 2051 (winter) at the creek's mouth where it flows into Lake Pend Oreille on the east side of Sandpoint. Sand Creek within the vicinity of the proposed project is subject to the fluctuating pool elevation from the Albeni Falls hydroelectric dam, and is very constricted between mid-October and mid-April due to low channel flow in the winter (refer to Figure 4).

The portion of Sand Creek in the City of Sandpoint is heavily used in the summer by motor boats, kayaks, and paddleboards. There is a pedestrian path along the east side of the creek, and public docks, restaurants, and day use boat access along the west shore. The regulated Ordinary High Water Mark (OHWM) elevation is 2062.5 feet above sea level. This elevation is typically maintained between mid-June, and the end of September.

Sand Creek is listed as Category 4a for sediment/siltation and temperature, and has TMDLs in place that were approved in 2008 (IDEQ, 2017). Fish species found in Sand Creek include brook trout, rainbow trout, westslope cutthroat trout, sculpin, sunfish, whitefish, and rough fish (TerraGraphics, 2006 and IDFG, 1984).

Figure 4: Sand Creek/ Lake Pend Oreille High and Low Water FlowComparisons

Preliminary Draft for Agency Review

4.2 Waters of the U.S / Wetlands

4.2.1 Waters of the US Assessment Summaries

Table 1. Information Summary of Sand Creek in the Study Area

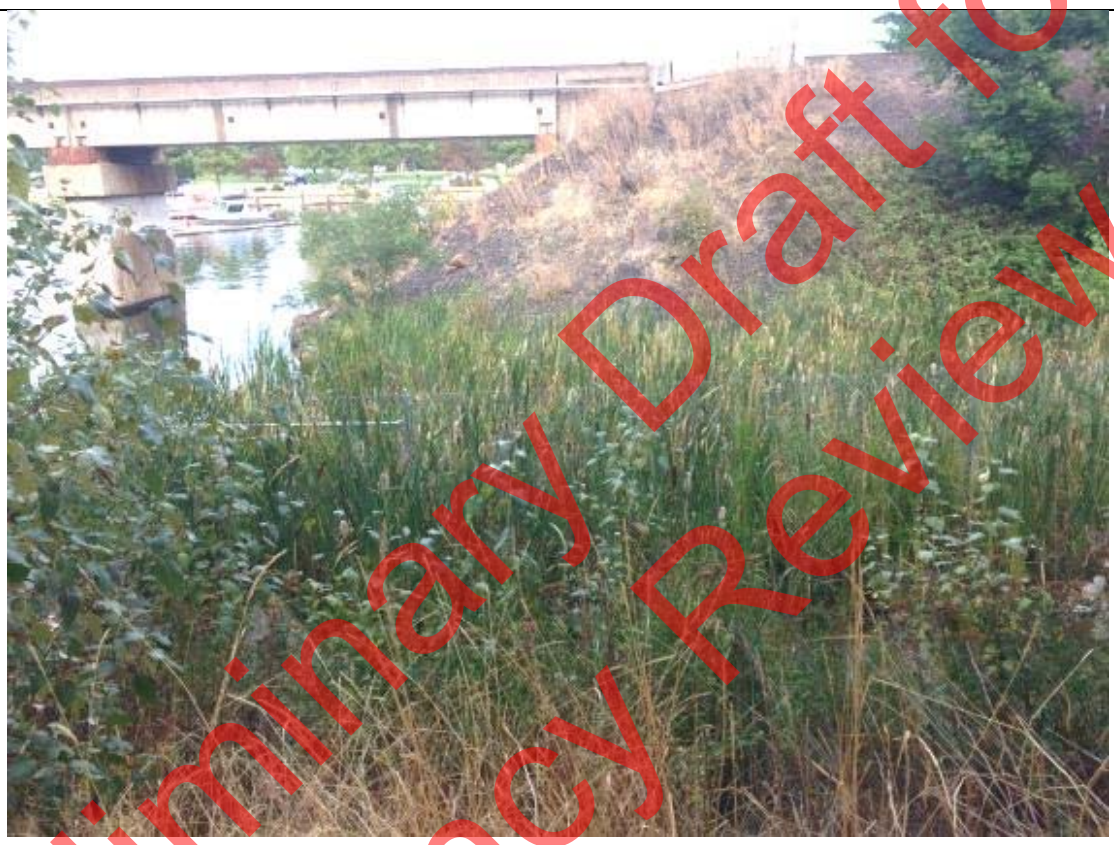

View from southwest side of Bridge 3.1 on the pedestrian path under I-95 underpass, looking east to Sand Creek, the BNSF Bridge 3.1 and northern edge of WL - A.

Water of the US Name	Sand Creek
HUC	17010214–Pend Oreille Lake
Potential Fish Use	brook trout, sculpin and sunfish
Location of Water of the US Relative to Study Area	Sand Creek flows under BNSF Milepost 3.1 Bridge in the study area and into Lake Pend Oreille past the Sandpoint City Beach Marina.
Connectivity (where stream flows from/to)	Sand Creek flows south from the mountains, and into Lake Pend Oreille.

Preliminary Draft for Agency Review

Table 2. Information Summary of Lake Pend Oreille in the Study Area

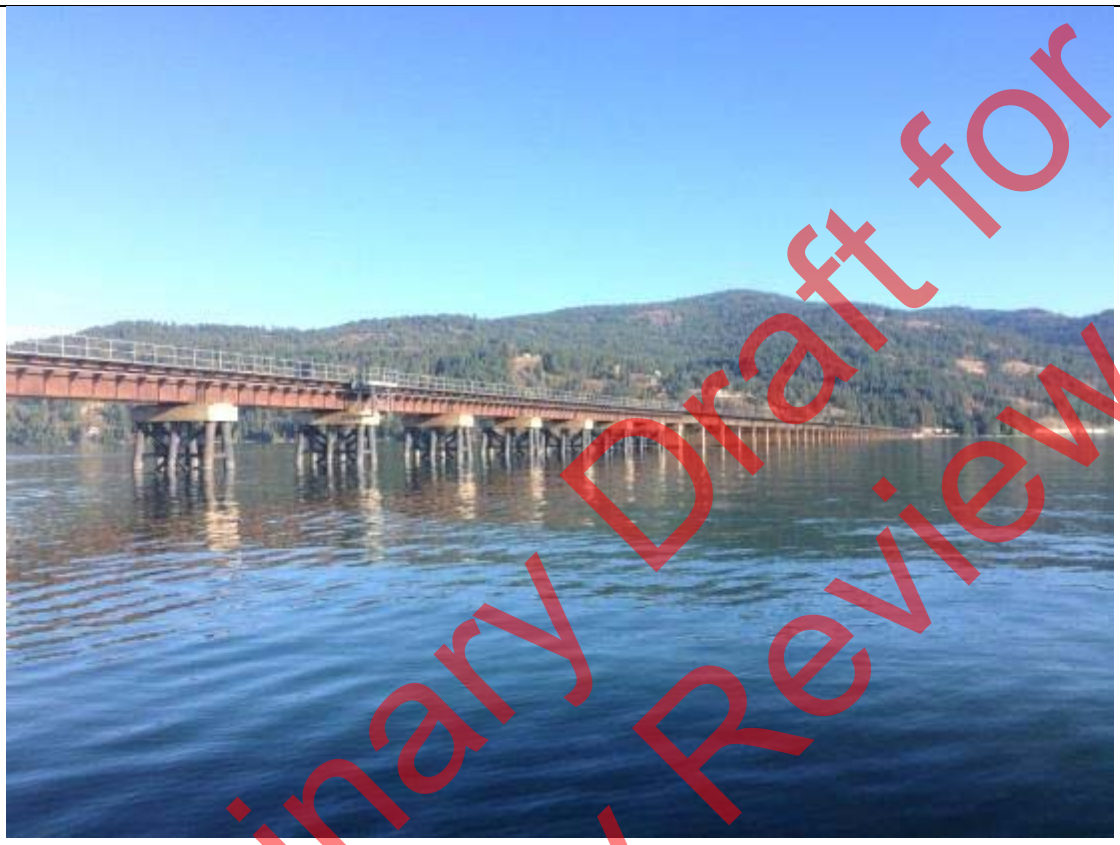

View from the northwest side of BNSF Bridge 3.9 looking south to Lake Pend Oreille and the bridge.

Water of the US Name	Lake Pend Oreille
HUC	17010214–Pend Oreille Lake
Potential Fish Use	Bullheads, crappies, perch, largemouth bass, smallmouth bass, cutthroat trout, kokanee, Gerrard rainbows, bull trout and lake trout.
Location of Water of the US Relative to Study Area	Lake Pend Oreille is directly adjacent to the existing BNSF track in several locations and under BNSF Bridge 3.9
Connectivity (where stream flows from/to)	Lake Pend Oreille originates from the Clark Fork River in western Montana, and outlets to the Pend Oreille River near the City of Dover. The river flows west into eastern Washington, then to Canada, where it joins the Upper Columbia River.

Preliminary Draft for Agency Review

Table 3. Information Summary of Wetland A in the Study Area

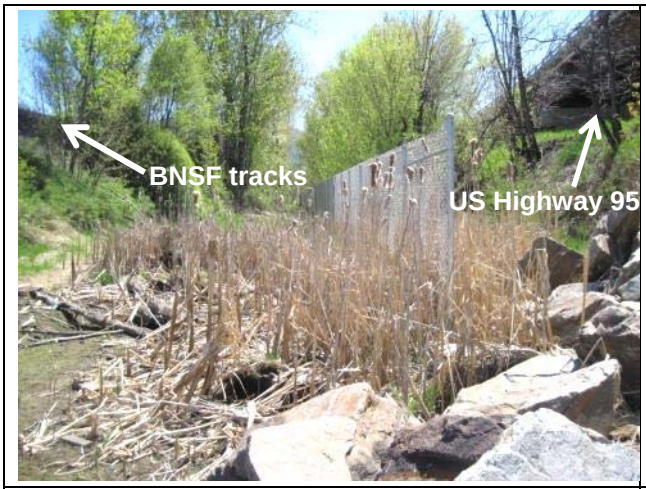	
View looking south to Wetland A between the BNSF tracks to the east and Highway 95 overpass to the west.	View from southwest of Bridge 3.1 on the pedestrian path under Highway-95 overpass, looking east to the northern edge of WL -A, Sand Creek, and BNSF Bridge 3.1.
Wetland Name	Wetland A (WL-A)
WRIA	17010214 – Pend Oreille Lake Watershed
Wetland Size Within BNSF ROW	0.28 - acre
Cowardin Classification	Not mapped on the NWI
HGM Classification	Emergent/Scrub-shrub/Forested
Wetland Data Sheet(s)	A1 (wetland) and A2 (upland)
Dominant Vegetation	Black cottonwood, red alder, blue elderberry, Scouler's willow, redosier dogwood, Nootka rose, Douglas spirea, reed canarygrass, common cattail, duckweed, and panicled bulrush.
Soils	31 – Mission silt loam, 0 to 2 percent slopes
Hydrology	Sand Creek, precipitation, groundwater, and adjacent area runoff.

4.2.2 Wetland Functions and Values

A summary of the wetland functions from the *MDT Montana Wetland Assessment Form* (5/29/1999 version) is displayed in Table 2, and the form can be found in Appendix B of this report. Using the form and user's manual, we assessed and assigned applicable function and value ratings of low, moderate, or high, and scores on a scale of 0.1 (lowest) to 1.0 (highest) "functional points". The scoring scale for each function and value is similar to that of the hydrogeomorphic (HGM) method. Actual functional points were calculated on the data form and expressed as percentage of the possible total functional points. Wetland A rates as a Category IV wetland, with 36% of total possible functional points,.

Preliminary Draft for Agency Review

Table 4. Functions and Values of the Delineated Wetland A

Function & Value Variables[1]	Rating	Actual Functional Points	Possible Functional Points	Functional Units: (Actual Points x Estimated AA Acreage)
A. Listed/Proposed T&E Species Habitat	L	0.0	1	0.00
B. MT Natural Heritage Program Species Habitat	L	0.1	1	0.028
C. General Wildlife Habitat	L	0.2	1	0.056
D. General Fish Habitat	M	0.5	1	0.14
E. Flood Attenuation	M	0.2	1	0.056
F. Short and Long Term Surface Water Storage	L	0.3	1	0.084
G. Sediment/Nutrient/Toxicant Removal	M	0.4	1	0.112
H. Sediment/Shoreline Stabilization	H	0.9	1	0.252
I. Production Export/Food Chain Support	M	0.5	1	0.14
J. Groundwater Discharge/Recharge	N/A	-	-	-
K. Uniqueness	L	0.2	1	0.056
L. Recreation/Education Potential (bonus points)	L	0.1	1	0.028
Totals:		3.4	11	0.95

1. "H" means that the function present is of high quality or has the potential to benefit the ecosystem; "M" means that the function present is of lower quality or has limited connection to the ecosystem; and "L" means the function present is of low quality or absent.

Preliminary Draft for Agency Review

5. References

Bonner County 2017. Research of the Bonner County, Idaho Land Use Map at http://bonnercounty.us/277-2/. Website accessed on October 12, 2017.

Burglund, J. and R. McEldowney 2008. MDT Wetland Assessment Method. Prepared for: Montana Department of Transportation. Post, Buckley, Schuh&Jernigan. Helena, Montana. 42p.

Idaho Department of Environmental Quality, 2017. Idaho's 2014 Integrated Report – Final. Boise, Idaho. February 2017.

Idaho Department of Environmental Quality. 2001. Clark Fork/Pend Oreille Sub-basin Assessment and Total Maximum Daily Loads; Hydrologic Unit Codes 17010213 & 17010214., Coeur d'Alene, Idaho. Revised March, 2001.

Idaho Department of Fish and Game. 1984. Pend Oreille Trout and Char Life History Study, Idaho Department of Fish and Game in cooperation with Lake Pend Oreille Idaho Club. May 1984.

Idaho Department of Lands (IDL). 2003. Hellroaring Creek Cumulative Watershed Effects Assessment.

McCubbins, Jonathan L., M. J. Hansen, J. M. DosSantos, and & A. M. Dux. 2016. Demographic Characteristics of an Adfluvial Bull Trout Population in Lake Pend Oreille, Idaho. North American Journal of Fisheries Management, 36(6): 1269-1277.

TerraGraphics 2006. Sand Creek Stressor Identification. Report prepared by TerraGraphics Environmental Engineering (Kellogg, ID); September 29, 2006. Prepared for U.S. Environmental Protection Agency (Seattle, WA) and Idaho Department of Environmental Quality (Coeur d' Alene, Idaho).

United States Army Corps of Engineers. 2010. Regional Supplement to the Corps of Engineers Wetland Delineation Manual: Western Mountains, Valleys, and Coast Region (Version 2.0), ed. J. S.Wakeley, R. W. Lichvar, and C. V. Noble. ERDC/EL TR-10-3.Vicksburg, MS: U.S. Army Engineer Research and Development Center.

United States Department of Agriculture (USDA), Natural Resources Conservation Service (NRCS). 2006 – Electronic Publication. Soil Survey of Bonner County, Idaho, available at http://www.nrcs.usda.gov/wps/portal/nrcs/surveylist/soils/survey/state/?stateId=ID

United States Department of Agriculture, Natural Resources Conservation Service (NRCS). March, 2014. Hydric Soils Lists available at http://www.nrcs.usda.gov/wps/portal/nrcs/main/soils/use/hydri

Preliminary Draft for Agency Review

Appendix A. Reference Maps

- Aerial Map
- USGS Map
- NRCS Soil Survey Map
- National Wetland Inventory Map
- FEMA Flood Zone Map

Preliminary Draft for Agency Review

Preliminary Draft for Agency Review

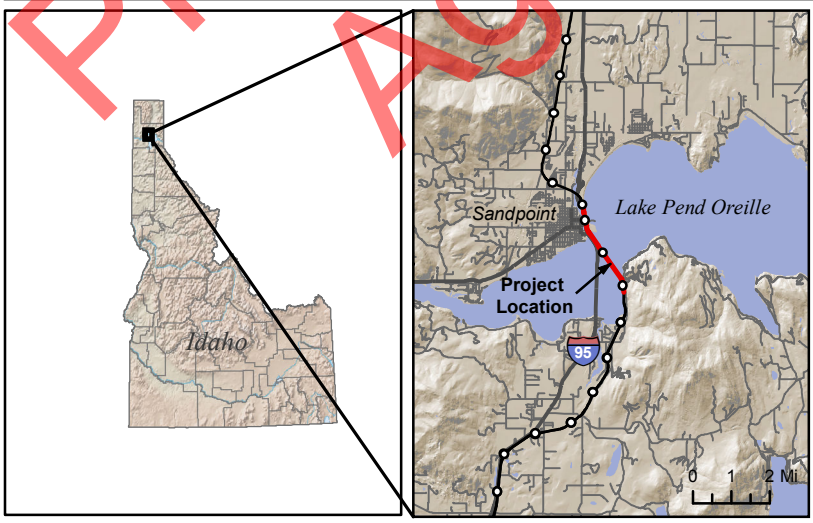

AERIAL OVERVIEW

PROJECT: BNSF SANDPOINT JUNCTION CONNECTOR
APPLICANT: BNSF RAILWAY CO.
BNSF LOCATION: MONTANA DIVISION, KOOTENAI RIVER SUBDIVISION, MP 2.9 - 5.1
PLSS: IN PARTS OF S15, 22, 23, 25, 26 & 36 T57 R2W - BOISE MERIDIAN
NORTH END (MP 2.9): 48°16'54.10"N, 116°32'49.35"W
SOUTH END (MP 5.1): 48°14'56.24"N, 116°31'24.02"W
WATERWAY: LAKE PEND OREILLE & SAND CREEK
CITY: SANDPOINT
COUNTY: BONNER
STATE: IDAHO
DATE: NOVEMBER 2017

DATA SOURCES: ESRI (AERIAL), NATURAL EARTH (STATE MAP), BNSF (TRACK AND MILEPOSTS)

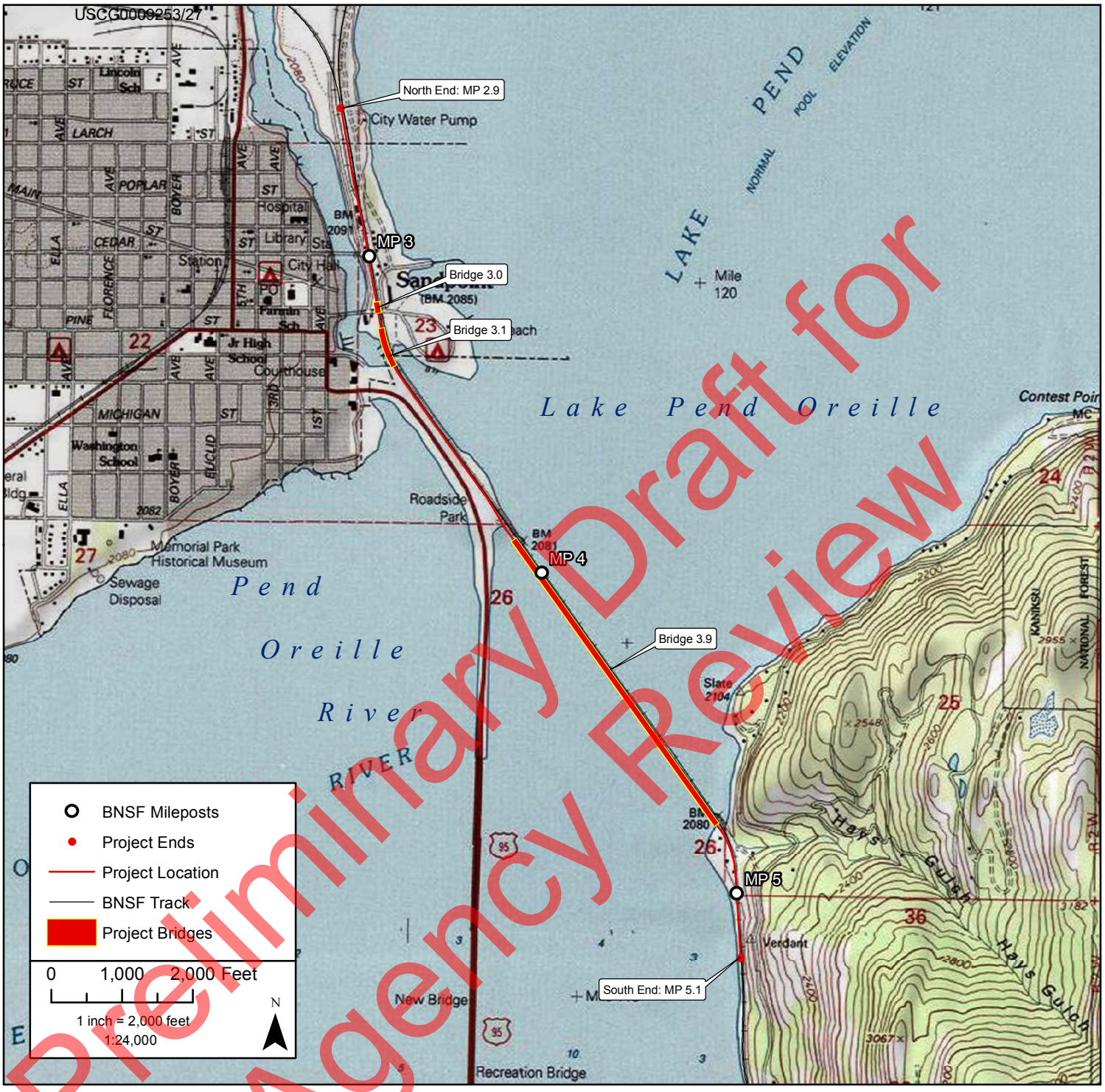

Preliminary Draft for Agency Review

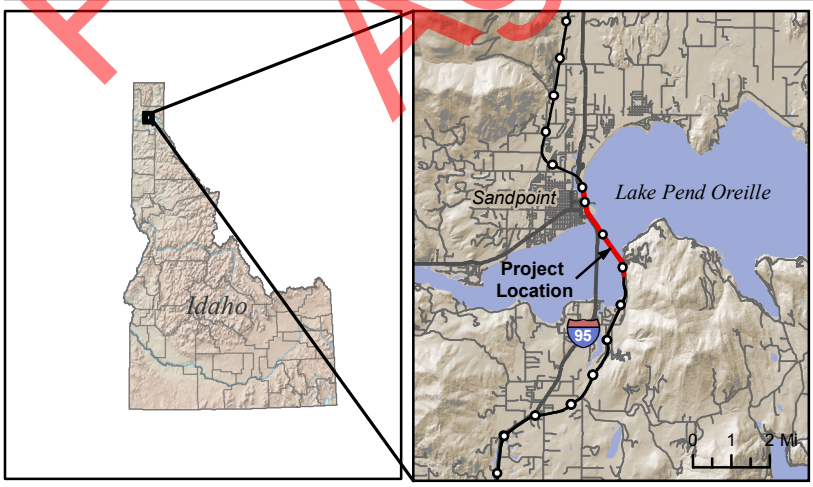

USGS OVERVIEW

PROJECT: BNSF SANDPOINT JUNCTION CONNECTOR
APPLICANT: BNSF RAILWAY CO.
BNSF LOCATION: MONTANA DIVISION, KOOTENAI RIVER SUBDIVISION, MP 2.9 - 5.1
PLSS: IN PARTS OF S15, 22, 23, 25, 26 & 36 T57 R2W - BOISE MERIDIAN
NORTH END (MP 2.9): 48°16'54.10"N, 116°32'49.35"W
SOUTH END (MP 5.1): 48°14'56.24"N, 116°31'24.02"W
WATERWAY: LAKE PEND OREILLE & SAND CREEK
CITY: SANDPOINT
COUNTY: BONNER
STATE: IDAHO
DATE: NOVEMBER 2017

DATA SOURCES: USGS (TOPOGRAPHY), NATURAL EARTH (STATE MAP), BNSF (TRACK AND MILEPOSTS)

Preliminary Draft for Agency Review

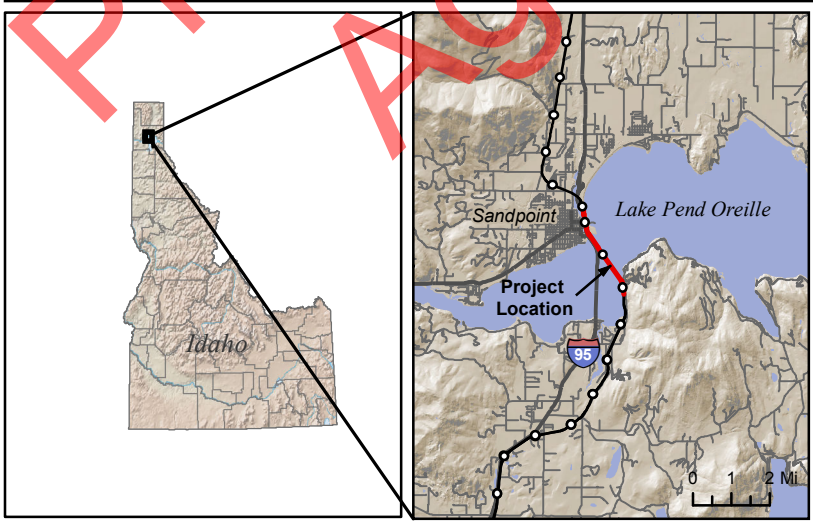

NRCS SOIL SURVEY MAP

PROJECT: BNSF SANDPOINT JUNCTION CONNECTOR
APPLICANT: BNSF RAILWAY CO.
BNSF LOCATION: MONTANA DIVISION, KOOTENAI RIVER SUBDIVISION, MP 2.9 - 5.1
PLSS: IN PARTS OF S15, 22, 23, 25, 26 & 36 T57 R2W - BOISE MERIDIAN
NORTH END (MP 2.9): 48°16'54.10"N, 116°32'49.35"W
SOUTH END (MP 5.1): 48°14'56.24"N, 116°31'24.02"W
WATERWAY: LAKE PEND OREILLE & SAND CREEK
CITY: SANDPOINT
COUNTY: BONNER
STATE: IDAHO
DATE: NOVEMBER 2017

DATA SOURCES: ESRI (AERIAL), NATURAL EARTH (STATE MAP), BNSF (TRACK AND MILEPOSTS), NATURAL RESOURCES CONSERVATION SERVICE (SOILS)

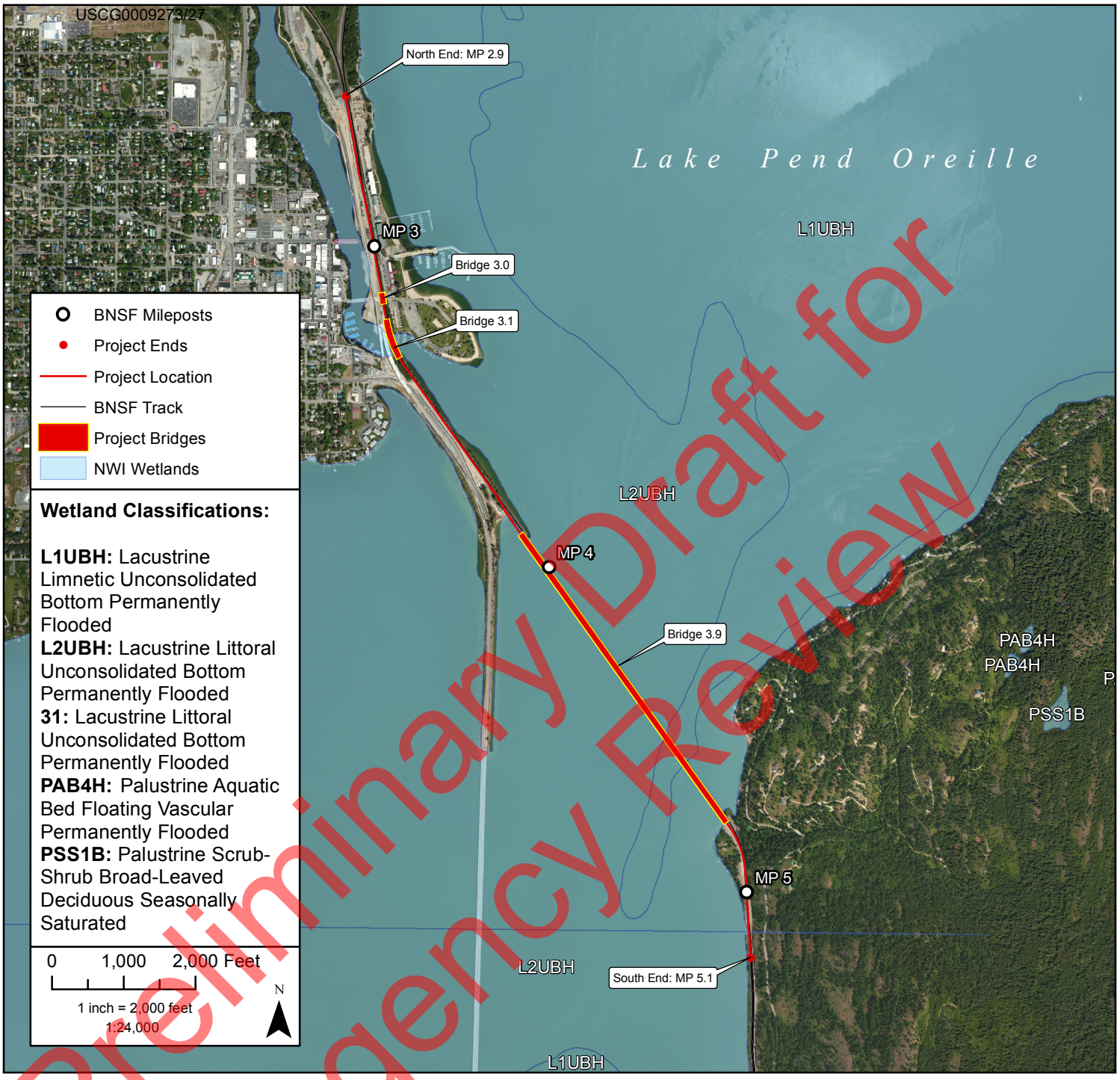

Preliminary Draft for Agency Review

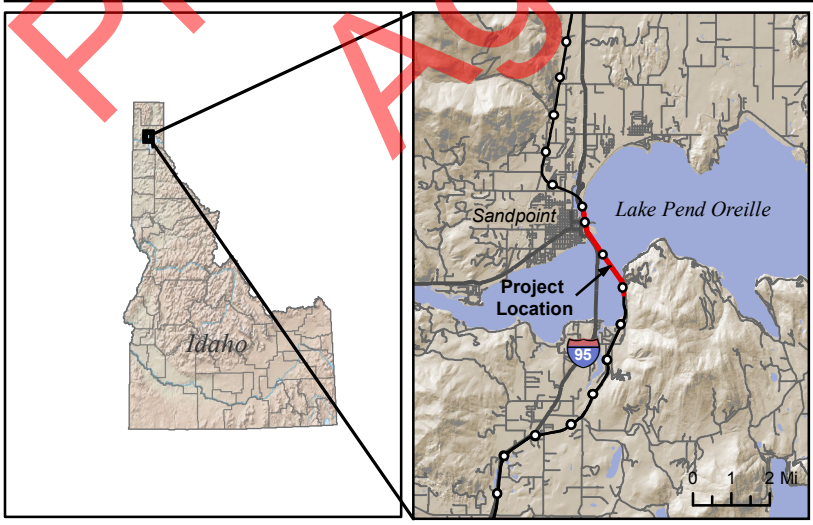

NATIONAL WETLAND INVENTORY MAP

PROJECT: BNSF SANDPOINT JUNCTION CONNECTOR
APPLICANT: BNSF RAILWAY CO.
BNSF LOCATION: MONTANA DIVISION, KOOTENAI RIVER SUBDIVISION, MP 2.9 - 5.1
PLSS: IN PARTS OF S15, 22, 23, 25, 26 & 36 T57 R2W - BOISE MERIDIAN
NORTH END (MP 2.9): 48°16'54.10"N, 116°32'49.35"W
SOUTH END (MP 5.1): 48°14'56.24"N, 116°31'24.02"W
WATERWAY: LAKE PEND OREILLE & SAND CREEK
CITY: SANDPOINT
COUNTY: BONNER
STATE: IDAHO
DATE: NOVEMBER 2017

DATA SOURCES: ESRI (AERIAL), NATURAL EARTH (STATE MAP), BNSF (TRACK AND MILEPOSTS), NATIONAL WETLAND INVENTORY (WETLANDS)

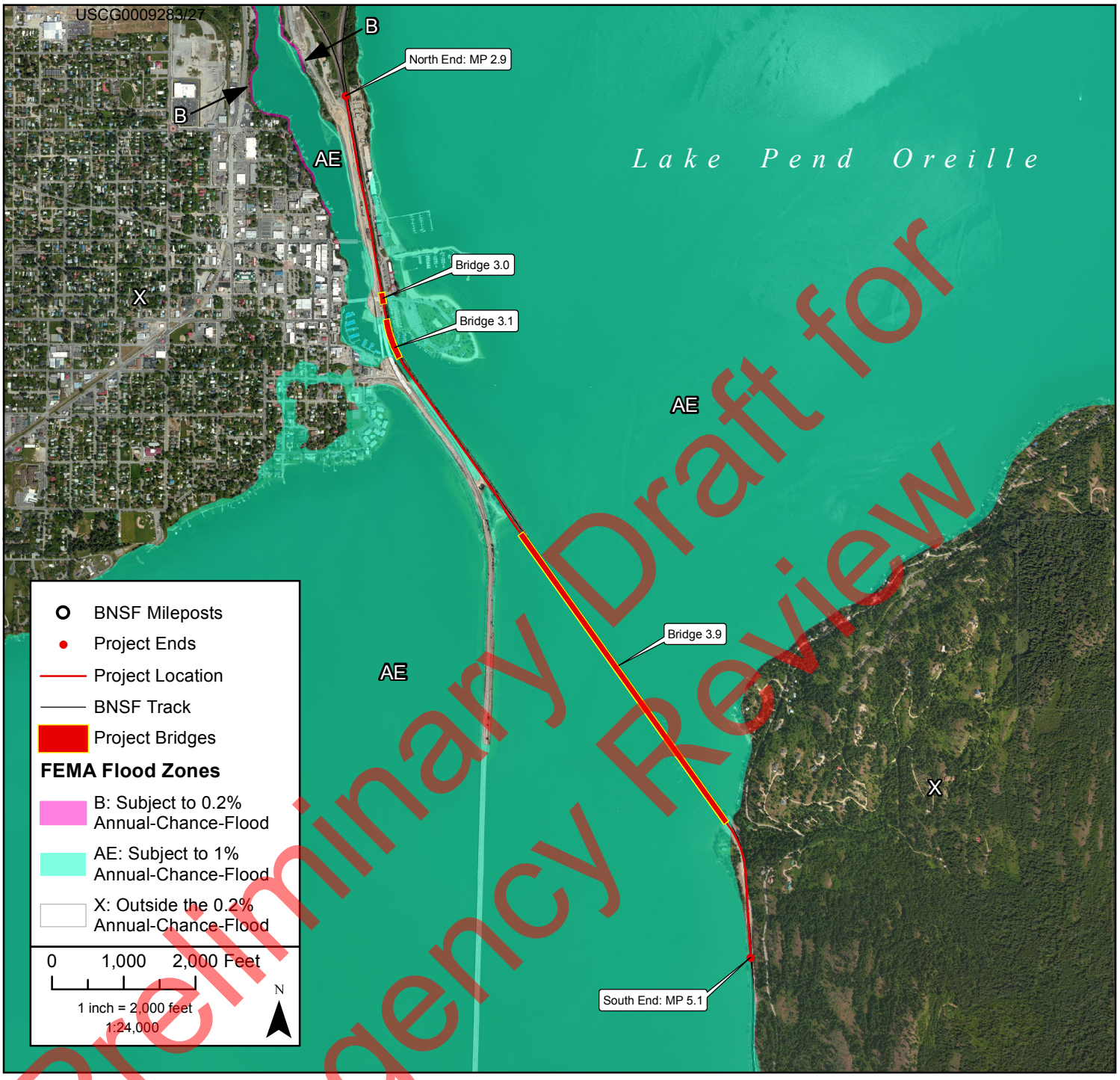

Preliminary Draft for Agency Review

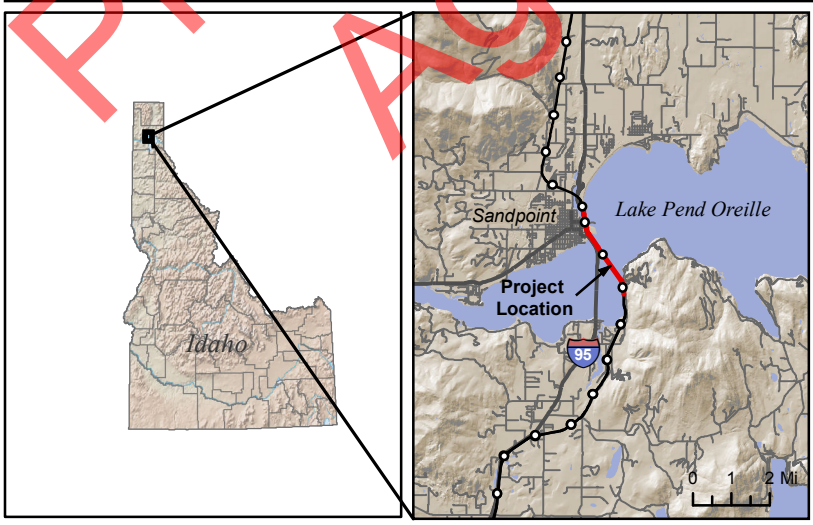

FEMA FLOOD ZONE MAP

PROJECT: BNSF SANDPOINT JUNCTION CONNECTOR
APPLICANT: BNSF RAILWAY CO.
BNSF LOCATION: MONTANA DIVISION, KOOTENAI RIVER SUBDIVISION, MP 2.9 - 5.1
PLSS: IN PARTS OF S15, 22, 23, 25, 26 & 36 T57 R2W - BOISE MERIDIAN
NORTH END (MP 2.9): 48°16'54.10"N, 116°32'49.35"W
SOUTH END (MP 5.1): 48°14'56.24"N, 116°31'24.02"W
WATERWAY: LAKE PEND OREILLE & SAND CREEK
CITY: SANDPOINT
COUNTY: BONNER
STATE: IDAHO
DATE: NOVEMBER 2017

DATA SOURCES: ESRI (AERIAL), NATURAL EARTH (STATE MAP), BNSF (TRACK AND MILEPOSTS), FEDERAL EMERGENCY MANAGEMENT AGENCY (FLOOD ZONES)

Appendix B. Forms / Plant List

- Corps Wetland Delineation Forms
- MDT Montana Wetland Assessment Form
- Study Area Plant List

Preliminary Draft for Agency Review

WETLAND DETERMINATION DATA FORM – Western Mountains, Valleys, and Coast Region

Project Site: **BNSF Sandpoint Junction Connector Project** City/County: Sandpoint/Bonner Sampling Date: 9/25/2017

Applicant/Owner: BNSF State: ID Sampling Point: A1

Investigator(s): SEP Section, Township, Range: S23,T57N, R2W

Landform (hillslope, terrace, etc.): Depressional area adjacent Sand Creek Local relief (concave, convex, none): concave Slope (%): 10%

Subregion (LRR): E Lat: 48°16' 18.39" N Long: 116°32' 38.40" W Datum: _____

Soil Map Unit Name: 31: Mission silt loam, 0 to 2 percent slopes NWI classification: PSS

Are climatic / hydrologic conditions on the site typical for this time of year? Yes ☒ No ☐ (If no, explain in Remarks.)

Are Vegetation ☐, Soil ☐, or Hydrology ☐, significantly disturbed? Are "Normal Circumstances" present? Yes ☒ No ☐

Are Vegetation ☐, Soil ☐, or Hydrology ☐, naturally problematic? (If needed, explain any answers in Remarks.)

SUMMARY OF FINDINGS – Attach site map showing sampling point locations, transects, important features, etc.

Hydrophytic Vegetation Present?	Yes ☒	No ☐	**Is the Sampled Area within a Wetland?**	**Yes ☒ No ☐**
Hydric Soil Present?	Yes ☒	No ☐		
Wetland Hydrology Present?	Yes ☒	No ☐		

Remarks: All of the wetland indicators are present, therefore this area is considered wetland.

VEGETATION – Use scientific names of plants

Tree Stratum (Plot size: _____)	Absolute % Cover	Dominant Species?	Indicator Status
1			
2.			
3.			
4. _____	_____	_____	_____
50% = _____, 20% = _____		= Total Cover	
Sapling/Shrub Stratum (Plot size: _____)			
1. Woods' rose (Rosa woodsia)			
2. _____	_____	_____	_____
3. _____	_____	_____	_____
4. _____	_____	_____	_____
5. _____	_____	_____	_____
50% = _____, 20% = _____		= Total Cover	
Herb Stratum (Plot size: _____)			
1. *reed canarygrass (Pahalaris arundinacea)*	20	yes	FACW
2. *Common cattail (Typha latifolia)*	80	no	OBL
3.			
4. _____	_____	_____	_____
5. _____	_____	_____	_____
6. _____	_____	_____	_____
7. _____	_____	_____	_____
8. _____	_____	_____	_____
9. _____	_____	_____	_____
10. _____		_____	_____
11. _____	_____	_____	_____
50% = _____, 20% = _____	100	= Total Cover	
Woody Vine Stratum (Plot size: _____)			
1. _____	_____	_____	_____
2. _____	_____	_____	_____
50% = _____, 20% = _____	_____	= Total Cover	
% Bare Ground in Herb Stratum _____			

Dominance Test Worksheet:

Number of Dominant Species That Are OBL, FACW, or FAC:	3	(A)
Total Number of Dominant Species Across All Strata:	2	(B)
Percent of Dominant Species That Are OBL, FACW, or FAC:	100	(A/B)

Prevalence Index worksheet:

	Total % Cover of:	Multiply by:
OBL species	80	x1 = 80
FACW species	20	x2 = 40
FAC species		x3 =
FACU species		x4 =
UPL species	_____	x5 = _____
Column Totals:	100 (A)	120 (B)

Prevalence Index = B/A = 1.2

Hydrophytic Vegetation Indicators:

- ☐ 1 – Rapid Test for Hydrophytic Vegetation
- ☒ 2 - Dominance Test is >50%
- ☒ 3 - Prevalence Index is ≤3.0[1]
- ☐ 4 - Morphological Adaptations[1] (Provide supporting data in Remarks or on a separate sheet)
- ☐ 5 - Wetland Non-Vascular Plants[1]
- ☐ Problematic Hydrophytic Vegetation[1] (Explain)

[1]Indicators of hydric soil and wetland hydrology must be present, unless disturbed or problematic.

Hydrophytic Vegetation Present? **Yes ☒ No ☐**

Remarks: 100% of the dominant vegetation is FAC or greater; therefore vegetation is hydrophytic in this location.

Preliminary Draft for Agency Review

Project Site: **BNSF Sandpoint Junction Connector Project**

SOIL

Sampling Point: A1

Profile Description: (Describe to the depth needed to document the indicator or confirm the absence of indicators.)

Depth (inches)	Matrix Color (moist)	Matrix %	Redox Features Color (moist)	Redox %	Type[1]	Loc[2]	Texture	Remarks
0-4	10YR 3/2	100					SL	silt loam
4-12	10Y 4/1	100					SL	silt loam

[1]Type: C= Concentration, D=Depletion, RM=Reduced Matrix, CS=Covered or Coated Sand Grains. [2]Location: PL=Pore Lining, M=Matrix

Hydric Soil Indicators: (Applicable to all LRRs, unless otherwise noted.)

- ☐ Histosol (A1)
- ☐ Histic Epipedon (A2)
- ☐ Black Histic (A3)
- ☐ Hydrogen Sulfide (A4)
- ☐ Depleted Below Dark Surface (A11)
- ☐ Thick Dark Surface (A12)
- ☐ Sandy Mucky Mineral (S1)
- ☐ Sandy Gleyed Matrix (S4)
- ☐ Sandy Redox (S5)
- ☐ Stripped Matrix (S6)
- ☐ Loamy Mucky Mineral (F1) **(except MLRA 1)**
- ☒ Loamy Gleyed Matrix (F2)
- ☐ Depleted Matrix (F3)
- ☐ Redox Dark Surface (F6)
- ☐ Depleted Dark Surface (F7)
- ☐ Redox Depressions (F8)

Indicators for Problematic Hydric Soils[3]:

- ☐ 2 cm Muck (A10)
- ☐ Red Parent Material (TF2)
- ☐ Very Shallow Dark Surface (TF12)
- ☐ Other (Explain in Remarks)

[3]Indicators of hydrophytic vegetation and wetland hydrology must be present, unless disturbed or problematic.

Restrictive Layer (if present):

Type: _____

Depth (inches): _____

Hydric Soils Present? **Yes** ☒ **No** ☐

Remarks: Hydric soil indicators are present .

HYDROLOGY

Wetland Hydrology Indicators:

Primary Indicators (minimum of one required; check all that apply)

- ☐ Surface Water (A1)
- ☒ High Water Table (A2)
- ☒ Saturation (A3)
- ☐ Water Marks (B1)
- ☐ Sediment Deposits (B2)
- ☐ Drift Deposits (B3)
- ☐ Algal Mat or Crust (B4)
- ☐ Iron Deposits (B5)
- ☐ Surface Soil Cracks (B6)
- ☐ Inundation Visible on Aerial Imagery (B7)
- ☐ Sparsely Vegetated Concave Surface (B8)
- ☐ Water-Stained Leaves (B9) **(except MLRA 1, 2, 4A, and 4B)**
- ☐ Salt Crust (B11)
- ☐ Aquatic Invertebrates (B13)
- ☐ Hydrogen Sulfide Odor (C1)
- ☐ Oxidized Rhizospheres along Living Roots (C3)
- ☐ Presence of Reduced Iron (C4)
- ☐ Recent Iron Reduction in Tilled Soils (C6)
- ☐ Stunted or Stresses Plants (D1) **(LRR A)**
- ☐ Other (Explain in Remarks)

Secondary Indicators (2 or more required)

- ☐ Water-Stained Leaves (B9) **(MLRA 1, 2, 4A, and 4B)**
- ☒ Drainage Patterns (B10)
- ☐ Dry-Season Water Table (C2)
- ☐ Saturation Visible on Aerial Imagery (C9)
- ☒ Geomorphic Position (D2)
- ☐ Shallow Aquitard (D3)
- ☒ FAC-Neutral Test (D5)
- ☐ Raised Ant Mounds (D6) **(LRR A)**
- ☐ Frost-Heave Hummocks (D7)

Field Observations:

Surface Water Present?	Yes	☐	No	☒	Depth (inches):	
Water Table Present?	Yes	☒	No	☐	Depth (inches):	2
Saturation Present? (includes capillary fringe)	Yes	☒	No	☐	Depth (inches):	1

Wetland Hydrology Present? **Yes** ☒ **No** ☐

Describe Recorded Data (stream gauge, monitoring well, aerial photos, previous inspections), if available:

Remarks: Primary and secondary indicators are present for wetland hydrology.

Preliminary Draft for Agency Review

WETLAND DETERMINATION DATA FORM – Western Mountains, Valleys, and Coast Region

Project Site: **BNSF Sandpoint Junction Connector Project** City/County: Sandpoint/Bonner Sampling Date: 9/25/2017

Applicant/Owner: BNSF State: ID Sampling Point: A2

Investigator(s): SEP Section, Township, Range: S23, T57N, R2W

Landform (hillslope, terrace, etc.): above wetland near pedestrian path Local relief (concave, convex, none): none Slope (%): 1%

Subregion (LRR): E Lat: 48°08'17.94" Long: 116°36'38.73" Datum: _____

Soil Map Unit Name: Bonner gravelly silt loam, 0 to 4 % slopes NWI classification: N/A

Are climatic / hydrologic conditions on the site typical for this time of year? Yes ☒ No ☐ (If no, explain in Remarks.)

Are Vegetation ☐, Soil ☐, or Hydrology ☐, significantly disturbed? Are "Normal Circumstances" present? Yes ☒ No ☐

Are Vegetation ☐, Soil ☐, or Hydrology ☐, naturally problematic? (If needed, explain any answers in Remarks.)

SUMMARY OF FINDINGS – Attach site map showing sampling point locations, transects, important features, etc.

Hydrophytic Vegetation Present?	Yes ☐	No ☒	**Is the Sampled Area within a Wetland?**	**Yes** ☐	**No** ☒
Hydric Soil Present?	Yes ☐	No ☒			
Wetland Hydrology Present?	Yes ☐	No ☒			

Remarks: None of the wetland indicators are present, therefore this area is not considered wetland.

VEGETATION – Use scientific names of plants

Tree Stratum (Plot size: _____)	Absolute % Cover	Dominant Species?	Indicator Status
1. Black Locust *(Robinia pseudoacacia)*	20	Yes	FACU
2.			
3. _____	_____	_____	_____
4. _____	_____	_____	_____
50% = _____, 20% = _____	_____	= Total Cover	
Sapling/Shrub Stratum (Plot size: _____)			
1.			
2.			
3.			
4. _____	_____	_____	_____
5. _____	_____	_____	_____
50% = 20% =		= Total Cover	
Herb Stratum (Plot size: _____)			
1. *Tansy ragweed (Senecio jacobaea)*	60	no	FACU
2. *Spotted knapweed (Centaurea stoebe)*	20	Yes	UPL
3. *Common tansy (Tanacetum vulgare)*	20	No	FACU
4. _____	_____	_____	_____
5. _____	_____	_____	_____
6. _____	_____	_____	_____
7. _____	_____	_____	_____
8. _____	_____	_____	_____
9. _____	_____	_____	_____
10. _____	_____	_____	_____
11. _____	_____	_____	_____
50% = _____, 20% = _____	_____	= Total Cover	
Woody Vine Stratum (Plot size: _____)			
1. _____	_____	_____	_____
2. _____	_____	_____	_____
50% = _____, 20% = _____	_____	= Total Cover	

% Bare Ground in Herb Stratum 20%

Dominance Test Worksheet:

Number of Dominant Species That Are OBL, FACW, or FAC:	0	(A)
Total Number of Dominant Species Across All Strata:	4	(B)
Percent of Dominant Species That Are OBL, FACW, or FAC:	0	(A/B)

Prevalence Index worksheet:

Total % Cover of:		Multiply by:
OBL species	_____	x1 = _____
FACW species		x2 =
FAC species		x3 =
FACU species		x4 =
UPL species		x5 = _____
Column Totals:	(A)	(B)

Prevalence Index = B/A = 2.5

Hydrophytic Vegetation Indicators:

- ☐ 1 – Rapid Test for Hydrophytic Vegetation
- ☐ 2 - Dominance Test is >50%
- ☐ 3 - Prevalence Index is ≤3.0[1]
- ☐ 4 - Morphological Adaptations[1] (Provide supporting data in Remarks or on a separate sheet)
- ☐ 5 - Wetland Non-Vascular Plants[1]
- ☐ Problematic Hydrophytic Vegetation[1] (Explain)

[1]Indicators of hydric soil and wetland hydrology must be present, unless disturbed or problematic.

Hydrophytic Vegetation Present? **Yes** ☐ **No** ☒

Remarks: 0% of the dominant vegetation is FAC or greater.

Preliminary Draft for Agency Review

Project Site: **BNSF Sandpoint Junction Connector Project**

SOIL

Sampling Point: A2

Profile Description: (Describe to the depth needed to document the indicator or confirm the absence of indicators.)

Depth (inches)	Matrix Color (moist)	Matrix %	Redox Features Color (moist)	Redox %	Type[1]	Loc[2]	Texture	Remarks
0-10	10YR 3/2	100					SaSL	Sandy Silt loam

[1]Type: C= Concentration, D=Depletion, RM=Reduced Matrix, CS=Covered or Coated Sand Grains. [2]Location: PL=Pore Lining, M=Matrix

Hydric Soil Indicators: (Applicable to all LRRs, unless otherwise noted.)

- ☐ Histosol (A1)
- ☐ Histic Epipedon (A2)
- ☐ Black Histic (A3)
- ☐ Hydrogen Sulfide (A4)
- ☐ Depleted Below Dark Surface (A11)
- ☐ Thick Dark Surface (A12)
- ☐ Sandy Mucky Mineral (S1)
- ☐ Sandy Gleyed Matrix (S4)
- ☐ Sandy Redox (S5)
- ☐ Stripped Matrix (S6)
- ☐ Loamy Mucky Mineral (F1) **(except MLRA 1)**
- ☐ Loamy Gleyed Matrix (F2)
- ☐ Depleted Matrix (F3)
- ☐ Redox Dark Surface (F6)
- ☐ Depleted Dark Surface (F7)
- ☐ Redox Depressions (F8)

Indicators for Problematic Hydric Soils[3]:

- ☐ 2 cm Muck (A10)
- ☐ Red Parent Material (TF2)
- ☐ Very Shallow Dark Surface (TF12)
- ☐ Other (Explain in Remarks)

[3]Indicators of hydrophytic vegetation and wetland hydrology must be present, unless disturbed or problematic.

Restrictive Layer (if present):

Type: ____

Depth (inches): ____

Hydric Soils Present? **Yes** ☐ **No** ☒

Remarks: Soil profile is not hydric and no soil indicators are present.

HYDROLOGY

Wetland Hydrology Indicators:

Primary Indicators (minimum of one required; check all that apply)

- ☐ Surface Water (A1)
- ☐ High Water Table (A2)
- ☐ Saturation (A3)
- ☐ Water Marks (B1)
- ☐ Sediment Deposits (B2)
- ☐ Drift Deposits (B3)
- ☐ Algal Mat or Crust (B4)
- ☐ Iron Deposits (B5)
- ☐ Surface Soil Cracks (B6)
- ☐ Inundation Visible on Aerial Imagery (B7)
- ☐ Sparsely Vegetated Concave Surface (B8)
- ☐ Water-Stained Leaves (B9) **(except MLRA 1, 2, 4A, and 4B)**
- ☐ Salt Crust (B11)
- ☐ Aquatic Invertebrates (B13)
- ☐ Hydrogen Sulfide Odor (C1)
- ☐ Oxidized Rhizospheres along Living Roots (C3)
- ☐ Presence of Reduced Iron (C4)
- ☐ Recent Iron Reduction in Tilled Soils (C6)
- ☐ Stunted or Stresses Plants (D1) **(LRR A)**
- ☐ Other (Explain in Remarks)

Secondary Indicators (2 or more required)

- ☐ Water-Stained Leaves (B9) **(MLRA 1, 2, 4A, and 4B)**
- ☐ Drainage Patterns (B10)
- ☐ Dry-Season Water Table (C2)
- ☐ Saturation Visible on Aerial Imagery (C9)
- ☐ Geomorphic Position (D2)
- ☐ Shallow Aquitard (D3)
- ☐ FAC-Neutral Test (D5)
- ☐ Raised Ant Mounds (D6) **(LRR A)**
- ☐ Frost-Heave Hummocks (D7)

Field Observations:

Surface Water Present?	Yes	☐	No	☒	Depth (inches): ____
Water Table Present?	Yes	☐	No	☒	Depth (inches): ____
Saturation Present? (includes capillary fringe)	Yes	☐	No	☒	Depth (inches): ____

Wetland Hydrology Present? **Yes** ☐ **No** ☒

Describe Recorded Data (stream gauge, monitoring well, aerial photos, previous inspections), if available:

Remarks: No hydrology present. At the edge of the pedestrian path and above Wetland A.

Preliminary Draft for Agency Review

MDT Montana Wetland Assessment Form (revised 5/25/1999)

1. Project Name: BNSF Sandpoint Junction Connector Project **2. Corps Project #:** NWW-2007-1303 **Control #:**

3. Evaluation Date: September 25, 2017 **4. Evaluator(s):** Sue Platte and Ariel Bordenave **5. Wetlands/Site #(s):** Wetland A (WL-A)

6. Wetland Location(s): i. Legal: T57N, R2W, Sec 23; Bonner County, Idaho
ii. Approx. Stationing or Mileposts: BNSF MP 3.14 -3.15
iii. Watershed: 17010214; Pend Oreille Lake Watershed, **GPS Reference No:** 48°16' 18.39" N, 116°32' 38.40" W

7. a. Evaluating Agency: Corps of Engineers – Walla Walla District
b. Purpose of Evaluation:
1. __ Wetlands potentially affected by MDT project
2. __ Mitigation wetlands; pre-construction
3. __ Mitigation wetlands; post-construction
4. X Other: Wetlands potentially affected by BNSF Project

8. Wetland size: (total acres) _____ (visually estimated)
0.28-acre (measured e.g by GPS [(if applies)]

9. Assessment area (AA): (WL-A tot.ac., see instructions on determining AA)
0.28-acre (measured e.g by GPS [(if applies)]

10. Classification of Wetland and Aquatic Habitats in AA (HGM according to Brinson, first col: USFWS according to Cowardin (1979), remaining cols.)

HGM Class	System	Subsystem	Class	Water Regime	Modifier	% of AA
DEPRESSIONAL	Palustrine	None	EM	C	I	50
RIVERINE	Riverine	Lower Perennial	UB	C	I	50

(Abbreviations: System: Palustrine (P): Subsytem: none **Classes:** Rock Bottom (RB), Unconsolidated bottom (UB), Aquatic Bed (AB), Unconsolidated Shore (US), Moss-lichen Wetland (ML), Emergent Wetland (EM), Scrub-Shrub Wetland (SS), Forested Wetland (FO); **System: Lacustrine** (L) Subsystem: Limnetic (2) / Classes RB, UB, AB; Subsystem: Littoral (4) / Classes RB, UB, AB, US, EM; **System: Riverine** Subsystem: Lower Perennial (3)/Classes RB, UB, AB, US, EM; **Subsystem:** Upper Perennial (3)/Classes RB, UB, AB, US; **Water Regimes:** Permanently Flooded (H) Intermittently Exposed (G), Semi-permanently Flooded (F), Seasonally Flooded (C), Saturated (B),Temporarily Flooded (A), Intermittently Flooded (J) **Modifiers:** Excavated (E), Impounded (I), Diked (D), Partly Drained (PD), Farmed (F), Artificial (A) **HGM Classes:** Riverine (R), Depressional (D), Slope (S), Mineral Soil Flats (MSF), Organic Soil Flats (OSF), Lacustrine Fringe (LF);

11. Estimated relative abundance: (of similarly classified sites within the same Major Montana Watershed Basin, see definitions)

(Circle one) Unknown Rare **Common** Abundant

Comments:

12. General condition of AA:
i. Regarding disturbance: (use matrix below to determine [circle] appropriate response

Conditions within AA	*Predominant conditions adjacent to (within 500 feet of) AA*		
	Land managed in predominantly natural state; is not grazed, hayed, logged, or otherwise converted; does not contain roads or buildings	Land not cultivated, but may be moderately grazed or hayed or selectively logged; or has been subject to minor clearing; contains few roads or buildings	Land cultivated or heavily grazed or logged; subject to substantial fill placement, grading, clearing, or hydrological alteration; high road or building density
AA occurs and is managed in predominantly natural state; is not grazed, hayed, logged, or otherwise converted; does not contain roads or occupied buildings	low disturbance	low disturbance	moderate disturbance
AA not cultivated, but may be moderately grazed or hayed or selectively logged; or has been subject to relatively minor clearing, fill placement, or hydrological alteration; contains few roads or buildings	moderate disturbance	moderate disturbance	high disturbance
AA cultivated or heavily grazed or logged; subject to relatively substantial fill placement, grading, clearing, or hydrological alteration; high road or building density	high disturbance	high disturbance	**high disturbance**

Comments: (types of disturbance, intensity, season, etc.): BNSF tracks are located to the east; US Highway 95 interchange is located to the west; and the outlet of Sand Creek is located to the north.

ii. Prominent noxious, aquatic nuisance, & other exotic vegetation species Including those not domesticated, (feral): Common tansy, spotted knapweed, and rush skeleton weed found on the upland edges of AA

iii. Provide brief descriptive summary of AA and surrounding land use/habitat: Highly disturbed area surrounded by railroad and road development; received hydrology from the outlet of Sand Creek, stormwater runoff, and precipitation in a topographically low, depressional area.

13. Structural Diversity: (based on number of "Cowardin" ***vegetated*** classes present [do not include unvegetated classes], see #10 above)

# of "Cowardin" Vegetated Classes present in AA (see#10)	≥3 vegetated classes (or ≥ 2 if 1 is forested)	2 vegetated classes (or 1 is forested)	≤1 vegetated class
Rating (circle)	High	**Moderate**	Low

Comments: WL-A has emergent, scrub-shrub components

Preliminary Draft for Agency Review

SECTION PERTAINING to FUNCTIONS & VALUES ASSESSMENT

14A. Habitat for Federally Listed or Proposed Threatened or Endangered Plants or Animals:

i. AA is Documented (D) or Suspected (S) to contain (circle one based on definitions contained in instructions):

Primary or critical habitat (**list species**)	D	S	_____
Secondary habitat (**list species**)	D	S	_____
Incidental habitat (**list species**)	D	S	_____
No usable habitat	D	**S**	_____

ii. Rating (use the conclusions from i above and the matrix below to arrive at [circle] the functional points and rating) [H=high, M=moderate or L=low] for this function)

Highest Habitat Level	doc/primary	sus/primary	doc/secondary	sus/secondary	doc/incidental	sus/incidental	None
Functional Points and Rating	1 (H)	.9 (H)	.8 (M)	.7 (M)	.3 (L)	.1 (L)	**0 (L)**

Sources for documented use (e.g. observations, records, etc): Idaho Conservation Data Center

14B. Habitat for plant or animals rated S1, S2, or S3 by the Montana Natural Heritage Program: (not including species listed in14A above)

i. AA is Documented (D) or Suspected (S) to contain (circle one based on definitions contained in instructions):

Primary or critical habitat (**list species**)	D	S	_____
Secondary habitat (**list species**)	D	S	_____
Incidental habitat (**list species**)	**D**	S	shoreline; passerine birds
No usable habitat	D	S	_____

ii. Rating (use the conclusions from i above and the matrix below to arrive at [circle] the functional points and rating)

Highest Habitat Level	doc/primary	sus/primary	doc/secondary	sus/secondary	doc/incidental	sus/incidental	None
Functional Points and Rating	1 (H)	.9 (H)	.8 (M)	.7 (M)	.3 (L)	**.1 (L)**	0 (L)

Sources for documented use (e.g. observations, records, etc.): Idaho Conservation Data Center

14C. General Wildlife Habitat Rating:

i. Evidence of overall wildlife use in AA (circle substantial, moderate, or low based on supporting evidence):

Substantial (based on any of the following [check]):
- _ observations of abundant wildlife #s or high species diversity (during any period)
- _ abundant wildlife sign such as scat, tracks, nest structures, game trails, etc.
- _ presence of extremely limiting habitat features not available in the surrounding area
- _ interviews with local biologists with knowledge of the AA

Minimal (based on any of the following [check]):
- _ few or no wildlife observations during peak use periods
- X little to no wildlife sign
- X sparse adjacent upland food sources
- X interviews with local biologists with knowledge of the AA

Moderate (based on any of the following [check]):
- _ observations of scattered wildlife groups or individuals or relatively few species during peak periods
- _ common occurrence of wildlife sign such as scat, tracks, nest structures, game trails, etc.
- _ adequate adjacent upland food sources
- _ interviews with local biologists with knowledge of the AA

ii. Wildlife habitat features (Working from top to bottom, circle appropriate AA attributes in matrix to arrive at rating. Structural diversity is from #13. For class cover to be considered evenly distributed, the most and least prevalent **vegetated** classes must be within 20% of each other in terms of their percent composition of the AA (see #10). Abbreviations for surface water durations are as follows: P/P = permanent/perennial; S/I = seasonal/intermittent; T/E = temporary/ephemeral; and A = absent [see instructions for further definitions of these terms])

Structural diversity (see #13)	High								Moderate								Low			
Class cover distribution (all vegetated classes)	Even				Uneven				Even				Uneven				Even			
Duration of surface water in ≥ 10% of AA	P/P	S/I	T/E	A	P/P	S/I	T/E	A	P/P	S/I	T/E	A	P/P	S/I	T/E	A	P/P	S/I	T/E	A
Low disturbance at AA (see #12i)	E	E	E	H	E	E	H	H	E	H	H	M	E	H	M	M	E	H	M	M
Moderate disturbance at AA (see #12i)	H	H	H	H	H	H	H	M	H	H	M	M	H	M	M	L	H	M	L	L
High disturbance at AA (see #12i)	M	M	M	L	M	M	L	L	M	**M**	L	L	M	L	L	L	L	L	L	L

iii. Rating (use the conclusions from i and ii above and the matrix below to arrive at [circle] the functional points and rating)

Evidence of wildlife use (i)	*Wildlife habitat features rating (ii)*			
	Exceptional	High	Moderate	Low
Substantial	1E	.9H	.8H	.7M
Moderate	.9H	.7M	.5M	.3L
Minimal	.6M	.4M	**.2L**	.1L

Comments:

Preliminary Draft for Agency Review

14D. General Fish Habitat Rating: (Assess this function if the AA is used by fish or the existing situation is "correctable" such that the AA could be used by fish [i.e., fish use is precluded by perched culvert or other barrier, etc.]. If the AA is not used by fish, fish use is not restorable due to lack of habitat, excessive gradient, etc., circle **NA** here and proceed to the next function. If fish use occurs in the AA but is not desired from a resource management perspective [such as fish use within an irrigation canal], then Habitat Quality [i below] should be marked as "low", applied accordingly in ii below, and noted in the comments.)

i. Habitat Quality (circle appropriate AA attributes in matrix to arrive at exceptional (E), high (H), moderate (M), or low (l) quality rating.

Duration of surface water in AA	Permanent / Perennial			Seasonal/Intermittent			Temporary / Ephemeral		
Cover - % of waterbody in AA containing objects such as submerged logs, large rock and boulders, overhanging banks, floating-leaved vegetation, etc	>25%	10-25%	<10%	>25%	10-25%	<10%	>25%	10-25%	<10%
Shading > 75% of streambank or shoreline within AA contains riparian or wetland scrub-shrub or forested communities	E	E	H	H	H	M	M	M	M
Shading – 50 to 75% of streambank or shoreline within AA contains riparian or wetland scrub-shrub or forested communities	H	H	M	M	**M**	M	M	L	L
Shading - < 50% of streambank or shoreline within AA contains riparian or wetland scrub-shrub or forested communities	H	M	M	M	L	L	L	L	L

ii. Modified Habitat Quality (Circle the appropriate response to the following question. If answer is Y, then reduce rating in I above by one level [E=H, H=M, M=L, L=L), is fish us in the AA precluded or significantly reduced by a culvert, dike, or other man-made structure or activity **or** is the waterbody included on the MDEQ list of waterbodies in need of TMDL development with listed "Probable Impaired Uses" including cold or warm water fishery or aquatic life support? Y N Modified habitat quality rating= (circle) E H M L

iii. Rating

Types of fish known or suspected within AA	*Modified Habitat Quality (ii)*			
	Exceptional	High	Moderate	Low
Native game fish	1(E)	.9(H)	.7(M)	**.5(M)**
Introduced game fish	.9(H)	.8(H)	.6(M)	.4(M)
Non-game fish	.7(M)	.6(M)	.5(M)	.3(L)
No fish	.5(M)	.3(L)	.2(L)	.1(L)

Comments:

14E. Flood Attenuation: (Applies only to wetlands subject to flooding via in-channel or overbank flow. If wetlands in AA are not flooded from in-channel or overbank flow, circle NA and proceed to next function.)

i. Rating (working from top to bottom, use the matrix below to arrive at [circle] the functional points and rating [H= high, M = moderate, or L =low] for this function)

Estimated wetland area in AA subject to periodic flooding	➢ 10 acres			<10.>2 acres			< 2 acres		
% of flooded wetland classified as forested , scrub-shrub, or both	75%	25-75%	<25%	75%	25-75%	<25%	75%	25-75%	<25%
AA contains **no outlet or restricted outlet**	1(H)	.9(H)	.6(M)	.8(H)	.7(M)	.5(M)	.4(M)	.3(L)	.2(L)
AA contains **unrestricted outlet**	.9(H)	.8(H)	.5(M)	.7(M)	.6(M)	.4(M)	.3(L)	**.2(L)**	.1(L)

ii. Are residences, businesses, or other features which may be significantly damaged by floods located within 0.5 miles downstream of the AA (circle)? Y N

Comments:

14F. Short and Long Term Surface Water Storage: (Applies to wetlands that flood or pond from overbank or in-channel flow, precipitation, upland surface flow, or groundwater flow. If no wetlands in the AA are subject to flooding or ponding, circle NA and proceed with the evaluation.)

i. Rating (Working from top to bottom, use the matrix below to arrive at [circle] the functional points and rating [H= high, M = moderate, or L =low] for this function. Abbreviations for surface water durations are as follows: P/P = permanent/perennial; S/I = seasonal/intermittent; and T/E = temporary/ephemeral [see instructions for further definitions of these terms].)

Estimated maximum acre feet of water contained in wetlands within the AA that are subject to periodic flooding or ponding	>5 acre feet			1.1 to 5 acre feet			≤1 acre foot		
Duration of surface water at wetlands within the AA	P/P	S/I	T/E	P/P	S/I	T/E	P/P	S/I	T/E
Wetlands in AA flood or pond **≥ 5 out of 10 years**	1H	.9H	.8H	.8H	.6M	.5M	.4M	**.3L**	.2L
Wetlands in AA flood or pond **< 5 out of 10 years**	.9H	.8H	.7M	.7M	.5M	.4M	.3L	.2L	.1L

Comments: Wetland ponds every year with the dam-regulated lake fluctuations in Lake Pend Oreille.

14G. Sediment/Nutrient/Toxicant Retention and Removal: (Applies to wetlands with potential to receive sediments, nutrients, or toxicants through influx of surface or ground water or direct input. If no wetlands in the AA are subject to such input, circle NA and proceed to n

i. Rating (working from top to bottom, use the matrix below to arrive at [circle] the functional points and rating [H = high, M = moderate, or L = low] for this function)

Sediment, nutrient, and toxicant input levels within AA	AA receives or surrounding land use with potential to deliver levels of sediments, nutrients, or compounds at levels such that other functions are not substantially impaired. Minor sedimentation, sources of nutrients or toxicants, or signs of eutrophication present.				Waterbody on MDEQ list of waterbodies in need of TMDL development for "probable causes" related to sediment, nutrients, or toxicants **or** AA receives or surrounding land use with potential to deliver high levels of sediments, nutrients, or compounds such that other functions are substantially impaired. Major sedimentation, sources of nutrients or toxicants, or signs of eutrophication present.			
% cover of wetland vegetation in AA	≥ 70%		< 70%		≥ 70%		< 70%	
Evidence of flooding / ponding in AA	Yes	No	Yes	No	Yes	No	Yes	No
AA contains **no or restricted outlet**	1H	.8H	.7M	.5M	.5M	.4M	.3L	.2L
AA contains **unrestricted outlet**	.9H	.7M	.6M	.4M	**.4M**	.3L	.2L	.1L

Comments:

Preliminary Draft for Agency Review

14H Sediment/Shoreline Stabilization: (Applies only if AA occurs on or within the banks or a river, stream, or other natural or man-made drainage, or on the shoreline of a standing water body which is subject to wave action. If does not apply, circle NA and proceed to next function)

i. Rating (working from top to bottom, use the matrix below to arrive at [circle] the functional points and rating)

*% Cover of **wetland** streambank or shoreline by species with deep, binding root masses*	*Duration of surface water adjacent to rooted vegetation*		
	Permanent / Perennial	Seasonal / Intermittent	Temporary / Ephemeral
≥ 65%	1H	.9H	.7M
35-64%	.7M	.6M	.5M
< 35%	.3L	.2L	.1L

Comments:

14I. Production Export/Food Chain Support:
i. Rating (Working from top to bottom, use the matrix below to arrive at [circle] the functional points and rating. Factor A = acreage of vegetated wetland component in the AA; Factor B = structural diversity rating from #13 Factor C = whether or not the AA contains a surface or subsurface outlet; the final three rows pertain to duration of surface water in the AA, where P/P=permanent/perennial, S/I=seasonal/intermittent, and T/E /A = temporary/ephemeral or absent [see instructions for further definitions of these terms].)

A	Vegetated component >5 acres						Vegetated component 1-5 acres						Vegetated component <1 acre					
B	High		Moderate		Low		High		Moderate		Low		High		Moderate		Low	
C	Yes	No	Yes	No	Yes	No	Yes	No	Yes	No	Yes	No	Yes	No	Yes	No	Yes	No
P/P	1H	.7M	.8H	.5M	.6M	.4M	.9H	.6M	.7M	.4M	.5M	.3L	.8H	.6M	.6M	.4M	.3L	.2L
S/I	.9H	.6M	.7M	.4M	.5M	.3L	.8H	.5M	.6M	.3L	.4M	.2L	.7M	.5M	**.5M**	.3L	.3L	.2L
T/E/A	.8H	.5M	.6M	.3L	.4M	.2L	.7M	.4M	.5M	.2L	.3L	.1L	.6M	.4M	.4M	.2L	.2L	.1L

Comments:

14J. Groundwater Discharge/Recharge: (check the appropriate indicators in i & ii below that apply to the AA)

i. Discharge Indicators
_____ Springs or seeps are known or observed
_____ Vegetation growing during dormant season/drought
_____ Wetland occurs at the toe of a natural slope
_____ Seeps are present at the wetland edge
_____ AA permanently flooded during drought periods
_____ Wetland contains an outlet, but no inlet
_____ Other:

ii. Recharge Indicators
_____ Permeable substrate present without underlying impeding layer
_____ Wetland contains inlet but no outlet
_____ Other:

Not Applicable

iii. Rating (use the information from i and ii above and the table below to arrive at [circle] the functional points and rating [H= high, M = moderate, or L =low] for this function)

Criteria	*Functional Points and Rating*
AA is known Discharge/Recharge area of one or more indicators of D/R present	1 (H)
No Discharge/Recharge indicators present	.1 (L)
Available Discharge information inadequate to rate AA D/R potential	N/A (unknown)

Comments:

14K. Uniqueness:
i. Rating (working from top to bottom, use the matrix below to arrive at [circle] the functional points and rating [H= high, M= moderate, or L =low] for this function)

Replacement potential	AA contains fen, bog, warm springs or mature (>80 yr-old) forested wetland **or** plant association listed as "S1" by the MNHP			AA does not contain previously cited rare types **and** structural diversity (#13) is high **or** contains plant association listed as "S2" by the MTNHP			AA does not contain previously cited rare types or associations **and** structural diversity (#13) is low-moderate		
Estimated relative abundance (#11)	rare	common	abundant	rare	common	abundant	rare	common	abundant
Low disturbance at AA (#12i)	1H	.9H	.8H	.8H	.6M	.5M	.5M	.4M	.3L
Moderate disturbance at AA (#12i)	.9H	.8H	.7M	.7M	.5M	.4M	.4M	.3L	.2L
High disturbance at AA (#12i)	.8H	.7M	.6M	.6M	.4M	.3L	.3L	**.2L**	.1L

Comments:

14L. Recreation/Education Potential: i. Is the AA a known or potential rec./ed. site: (circle) Y or N (if 'yes rate as (circle) High[1] and go to ii; if no go to iii) **ii.** Check categories that apply to the AA: Educational/scientific study; ___ Consumptive rec.; ___ Non-consumptive rec.; ___Other
iii. Based on location, diversity, size, and other site attributes, is there strong potential for rec/ed use? Y or N (if 'yes go to ii; then proceed to iv, if rate as (circle) Low [0.1] **iv.** Rating (use the matrix below to arrive at [circle] the functional points and rating)

Ownership	*Disturbance at AA*		
	Low	Moderate	High
Public ownership	1(H)	.5(M)	.2(L)
Private ownership	.7(M)	.3(L)	.1(L)

Comments: WL-A is within the BNSF right-of-way (ROW). As such, there is no potential for recreation or educational opportunities.

Preliminary Draft for Agency Review

FUNCTION & VALUE SUMMARY & OVERALL RATING FOR WETLAND/SITE #(S): WL-A

Function & Value Variables	Rating	Actual Functional Points	Possible Functional Points	Functional Units: (Actual Points x Estimated AA Acreage)
A. Listed/Proposed T&E Species Habitat	L	0.0	1	0.00
B. MT Natural Heritage Program Species Habitat	L	0.1	1	0.028
C. General Wildlife Habitat	L	0.2	1	0.056
D. General Fish Habitat	M	0.5	1	0.14
E. Flood Attenuation	M	0.2	1	0.056
F. Short and Long Term Surface Water Storage	L	0.3	1	0.084
G. Sediment/Nutrient/Toxicant Removal	M	0.4	1	0.112
H. Sediment/Shoreline Stabilization	H	0.9	1	0.252
I. Production Export/Food Chain Support	M	0.5	1	0.14
J. Groundwater Discharge/Recharge	N/A	-	-	-
K. Uniqueness	L	0.2	1	0.056
L. Recreation/Education Potential (bonus points)	L	0.1	1	0.028
Totals:		3.4	11	0.95

Category I Wetland: (must satisfy **one** of the following criteria; otherwise go to Category II)
_____ Score of 1 functional point for Listed/Proposed Threatened or Endangered Species; **or**
_____ Score of 1 functional point for Uniqueness; **or**
_____ Score of 1 functional point for Flood Attenuation **and** answer to Question 14E.ii is "yes"; **or**
_____ Percent of possible score > 80% (round to nearest whole #).

Category II Wetland: (Criteria for Category I not satisfied **and** meets any **one** of the following criteria; otherwise go to Category IV)
_____ Score of 1 functional point for MT Natural Heritage Program Species Habitat; **or**
_____ Score of .9 or 1 functional point for General Wildlife Habitat; **or**
_____ Score of .9 or 1 functional point for General Fish Habitat; **or**
_____ "High" to "Exceptional" ratings for **both** General Wildlife Habitat **and** General Fish/Aquatic Habitat; **or**
_____ Score of .9 functional point for Uniqueness; **or**
_____ Percent of possible score > 65% (round to nearest whole #) of total possible functional points.

Category III Wetland: (Criteria for Categories I, II, or IV not satisfied)

Category IV Wetland: (Criteria for Categories I or II are not satisfied and all of the following criteria are met; otherwise go to Category III)
__X__ "Low" rating for Uniqueness; **and**
__X__ "Low" rating for Production Export / Food Chain Support; **and**
_____ Total actual functional points < 30% (round to nearest whole #) of total possible functional points.

OVERALL ANALYSIS AREA RATING: IV

Preliminary Draft for Agency Review

Appendix B: Study Area Plant List

Trees		
Black cottonwood	*Populus balsamifera*	FAC
Black Locust	*Robinia pseudoacacia*	FACU
Douglas fir	*Pseudotsuga menziesii*	FACU
Lodgepole pine	*Pinus contorta*	FAC
Ponderosa pine	*Pinus ponderosa*	FACU
Red alder	*Alnus rubra*	FAC
Western hemlock	*Tsuga heterophylla*	FACU
Western larch	*Larix occidentalis*	FACU
Western red cedar	*Thuja plicata*	FAC
Shrubs		
Black hawthorn	*Crataegus douglasii*	FAC
Blue elderberry	*Sambucus nigra*	FACU
Chokecherry	*Prunus virginiana*	FACU
Common snowberry	*Symphoricarpos albus*	FACU
Douglas spirea	*Spiraea douglasii*	FACW
Nootka rose	*Rosa nutkana*	FAC
Ocean spray	*Holodiscus discolor*	FACU
Oregon boxleaf	*Paxistima myrsinites*	FACU
Pacific ninebark	*Physocarpus capitatus*	FACW
Redosier dogwood	*Cornus stolonifera*	FACW
Rocky mountain maple	*Acer glabrum*	FACU
Scouler's willow	*Salix scouleriana*	FAC
Serviceberry	*Amelanchier alnifolia*	FACU
Smooth sumac	*Rhus glabra*	UPL
Thimbleberry	*Rubus parviflorus*	FACU
Trailing blackberry	*Rubus spectabilis*	FACU
Woods' rose	*Rosa woodsii*	FACU
Herbs		
American trailplant	*Adenocaulon bicolor*	UPL
Canada thistle	*Cirsium arvense*	FAC
Cheatgrass	*Bromus tectorum*	UPL
Common cattail	*Typha latifolia*	OBL
Common duckweed	*Lemna minor*	OBL
Common mullein	*Verbascum Thapsus*	FACU
Common panicgrass	*Panicum capillare*	FAC
Common plantain	*Plantago major*	FACU
Common tansy	*Tanacetum vulgare*	FACU
Common timothy	*Panicum capillare*	FAC

Preliminary Draft for Agency Review

Creeping buttercup	*Ranunculus repens*	FACW
Crested wheat grass	*Agropyron cristatum*	NL
Eurasian water milfoil	*Myriophyllum spicatum*	OBL
Leafy spurge	*Euphorbia esula*	UPL
Meadow foxtail	*Alopecurus pratensis*	FACW
Orange hawkweed	*Hieracium aurantiacum*	UPL
Orchardgrass	*Dactylis glomerata*	FAC
Oregon boxleaf	*Paxistima myrsinites*	FACU
Oxeye daisy	*Leucanthemum vulgare*	FACU
Panicled bulrush	*Scirpus microcarpus*	OBL
Perennial rye grass	*Lolium perenne*	FAC
Queencup beadlily	*Clintonia uniflora*	FACU
Red clover	*Trifolium pratense*	FACU
Reed canarygrass	*Phalaris arundinaceae*	FACW
Rush skeletonweed	Chondrilla juncea	FACU
Smooth brome	*Bromus inermis*	FAC
Spotted knapweed	*Centaurea stoebe*	UPL
Starry false Solomon's seal	*Maianthemum stellatum*	FAC
Stinging nettle	*Urtica dioica*	FAC
Tansy ragweed	*Senecio jacobaea*	FACU
Timothy	*Phleum pratense*	FAC
Yellow star-thistle	*Centaurea solstitialis*	UPL
Western panicgrass	*Dichanthelium acuminatum*	NL
Western wheatgrass	*Pascopyrum smithii*	FACU

- Obligate (OBL) - occur almost always under natural conditions in wetlands.
- Facultative Wetland (FACW) - usually occur in wetlands but occasionally found in non-wetlands.
- Facultative (FAC) - equally likely to occur in wetlands and nonwetlands.
- Facultative Upland (FACU) - usually occur in non-wetlands but occasionally found in wetlands.
- Not Listed (NL)

Preliminary Draft for Agency Review

Appendix D

Waters of the United States Impact Maps

Preliminary Draft for Agency Review

USCG0009423/27

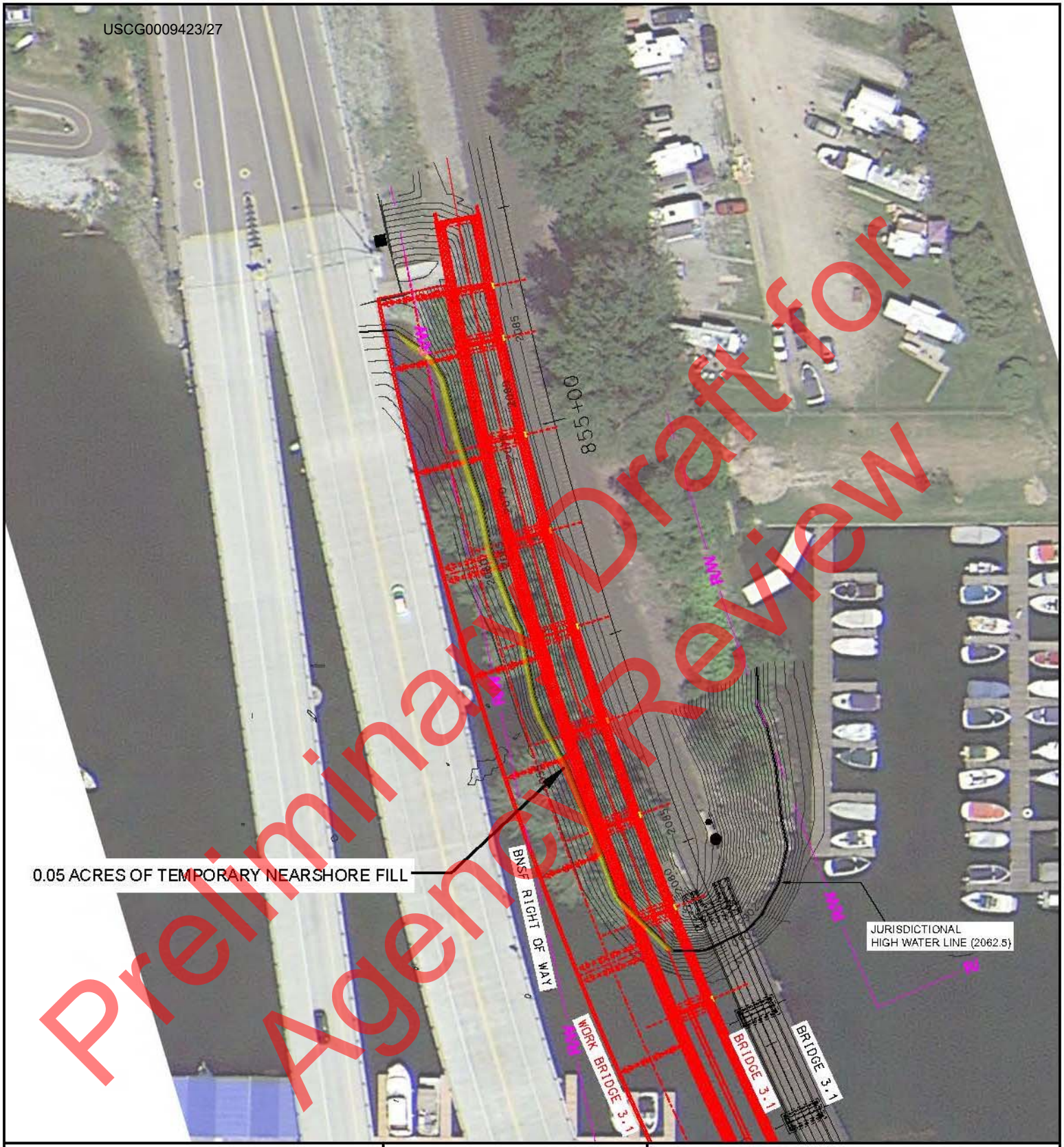

Preliminary Draft for Agency Review

LEGEND

- = EXISTING (TYPICAL)
- = PROPOSED
- = NEARSHORE FILL AREA (TEMPORARY)

N

30' 0 15' 30' 60'

GRAPHIC SCALE

JURISDICTIONAL IMPACTS
BNSF BRIDGE 3.1 NORTH END

PROJECT: BNSF SANDPOINT JUNCTION CONNECTOR
BNSF LOCATION: MONTANA DIVISION, KOOTENAI SUBDIVISION, MP 2.9-5.1
CITY: SANDPOINT
COUNTY: BONNER
STATE: IDAHO
DATE: NOVEMBER 2017

BASED ON: HANSON PRELIMINARY PLANS (30%, NOV. 2017)

USCG0009433/27

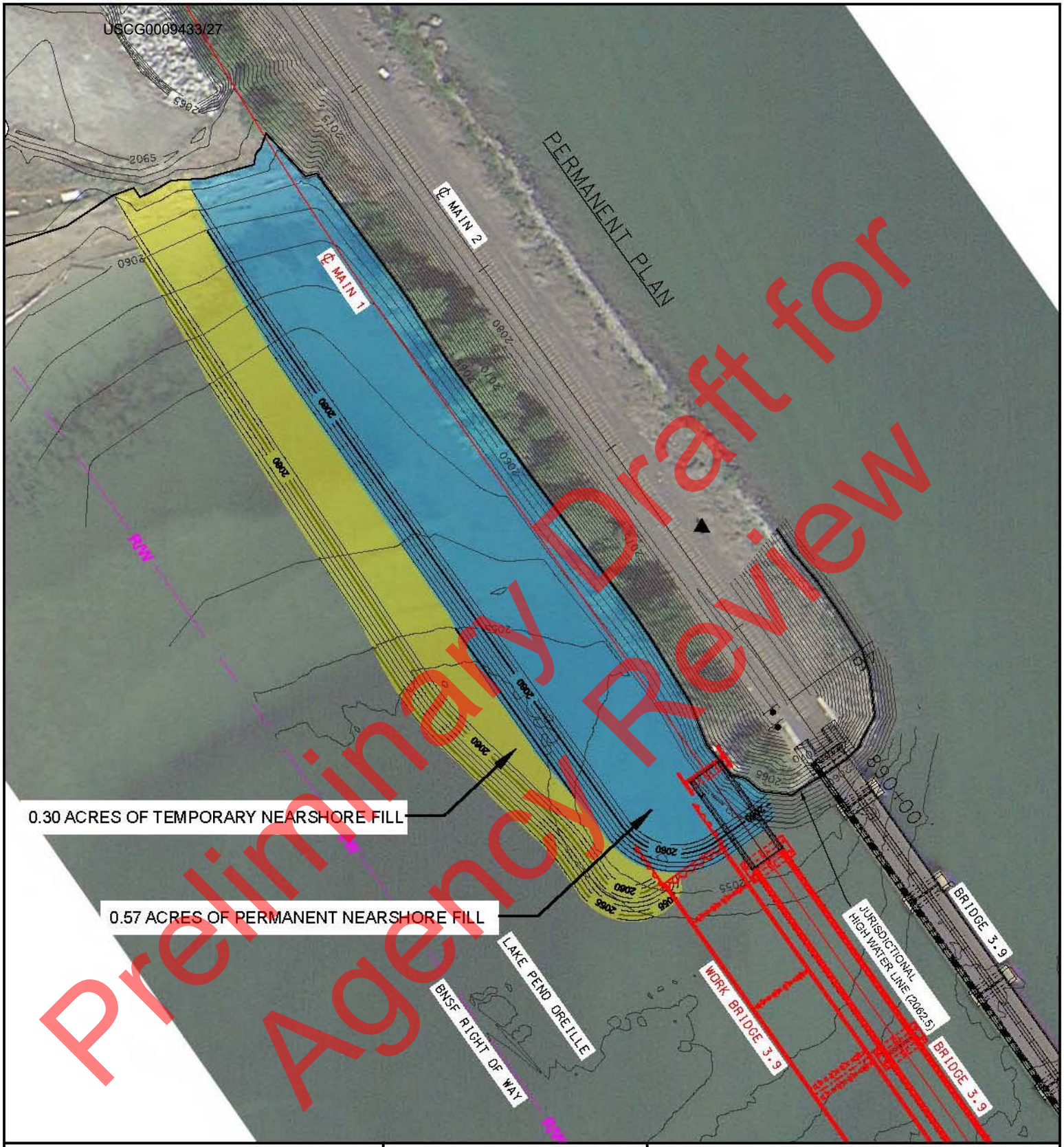

Preliminary Draft for Agency Review

LEGEND

- = EXISTING (TYPICAL)
- = PROPOSED
- = NEARSHORE FILL AREA (PERMANENT)
- = NEARSHORE FILL AREA (TEMPORARY)

N

30' 0 15' 30' 60'

GRAPHIC SCALE

JURISDICTIONAL IMPACTS
BNSF BRIDGE 3.9 NORTH END

PROJECT: BNSF SANDPOINT JUNCTION CONNECTOR
BNSF LOCATION: MONTANA DIVISION, KOOTENAI SUBDIVISION, MP 2.9-5.1
CITY: SANDPOINT
COUNTY: BONNER
STATE: IDAHO
DATE: NOVEMBER 2017

BASED ON: HANSON PRELIMINARY PLANS (30%, NOV. 2017)

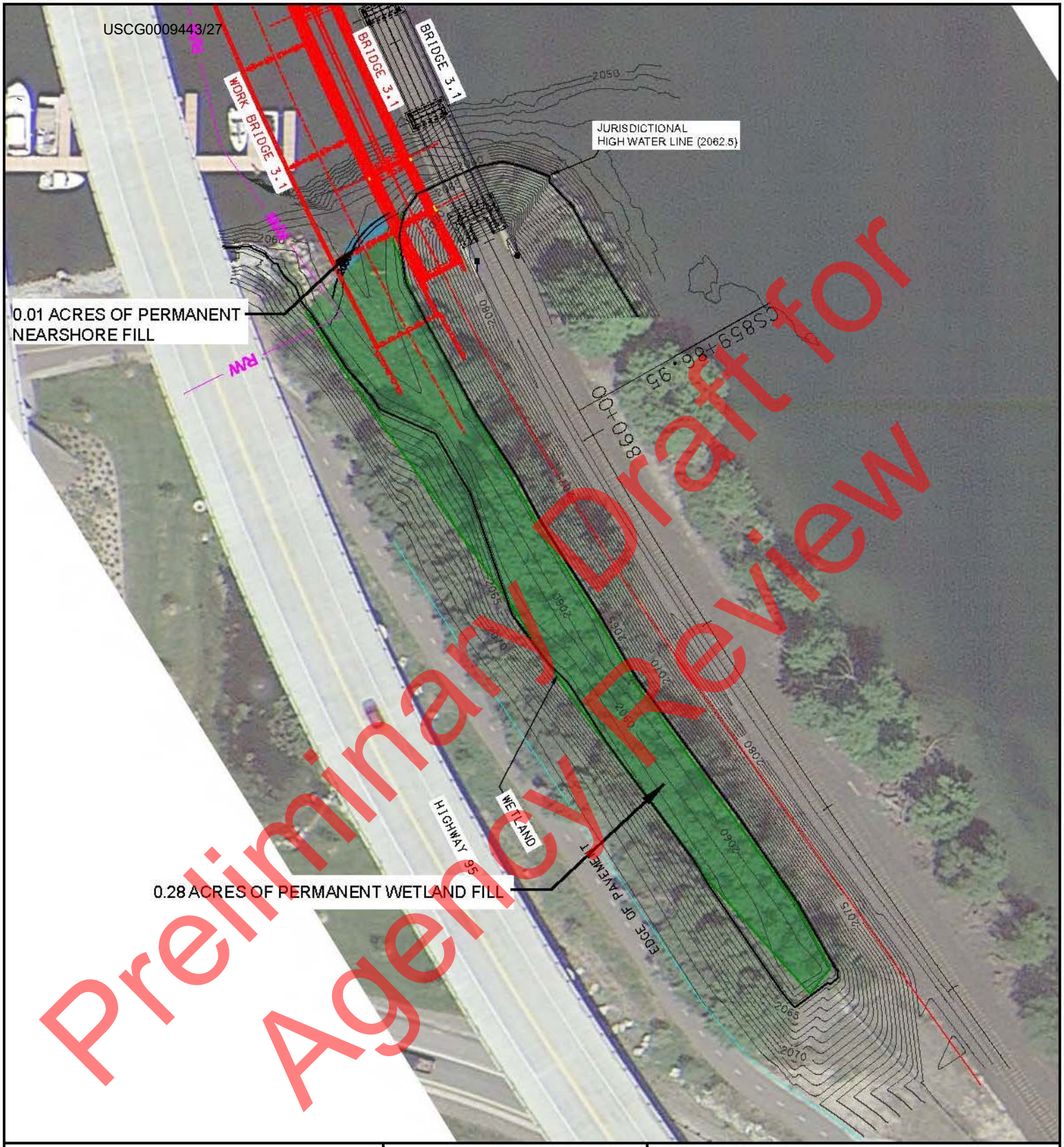

LEGEND

- = EXISTING (TYPICAL)
- = PROPOSED
- = NEARSHORE FILL AREA (PERMANENT)
- = WETLAND FILL AREA (PERMANENT)

N

30' 0 15' 30' 60'

GRAPHIC SCALE

JURISDICTIONAL IMPACTS
BNSF BRIDGE 3.1 SOUTH END

PROJECT: BNSF SANDPOINT JUNCTION CONNECTOR
BNSF LOCATION: MONTANA DIVISION,
KOOTENAI SUBDIVISION, MP 2.9-5.1
CITY: SANDPOINT
COUNTY: BONNER
STATE: IDAHO
DATE: NOVEMBER 2017

BASED ON: HANSON PRELIMINARY PLANS (30%, NOV. 2017)

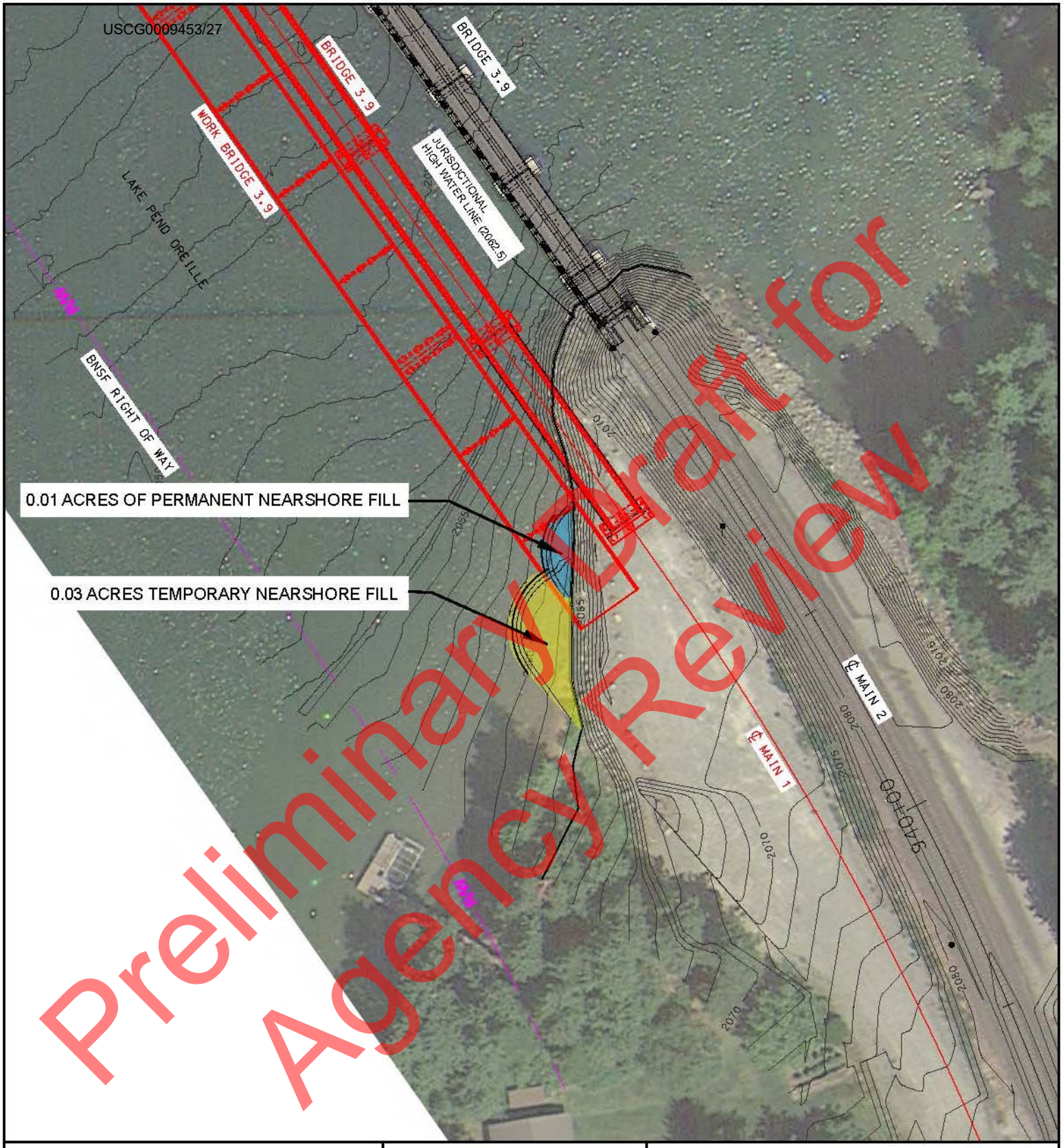

LEGEND

- = EXISTING (TYPICAL)
- = PROPOSED
- = NEARSHORE FILL AREA (PERMANENT)
- = NEARSHORE FILL AREA (TEMPORARY)

N

30' 0 15' 30' 60'

GRAPHIC SCALE

JURISDICTIONAL IMPACTS
BNSF BRIDGE 3.9 SOUTH END

PROJECT: BNSF SANDPOINT JUNCTION CONNECTOR
BNSF LOCATION: MONTANA DIVISION, KOOTENAI SUBDIVISION, MP 2.9-5.1
CITY: SANDPOINT
COUNTY: BONNER
STATE: IDAHO
DATE: NOVEMBER 2017

BASED ON: HANSON PRELIMINARY PLANS (30%, NOV. 2017)

USCG0009463/27

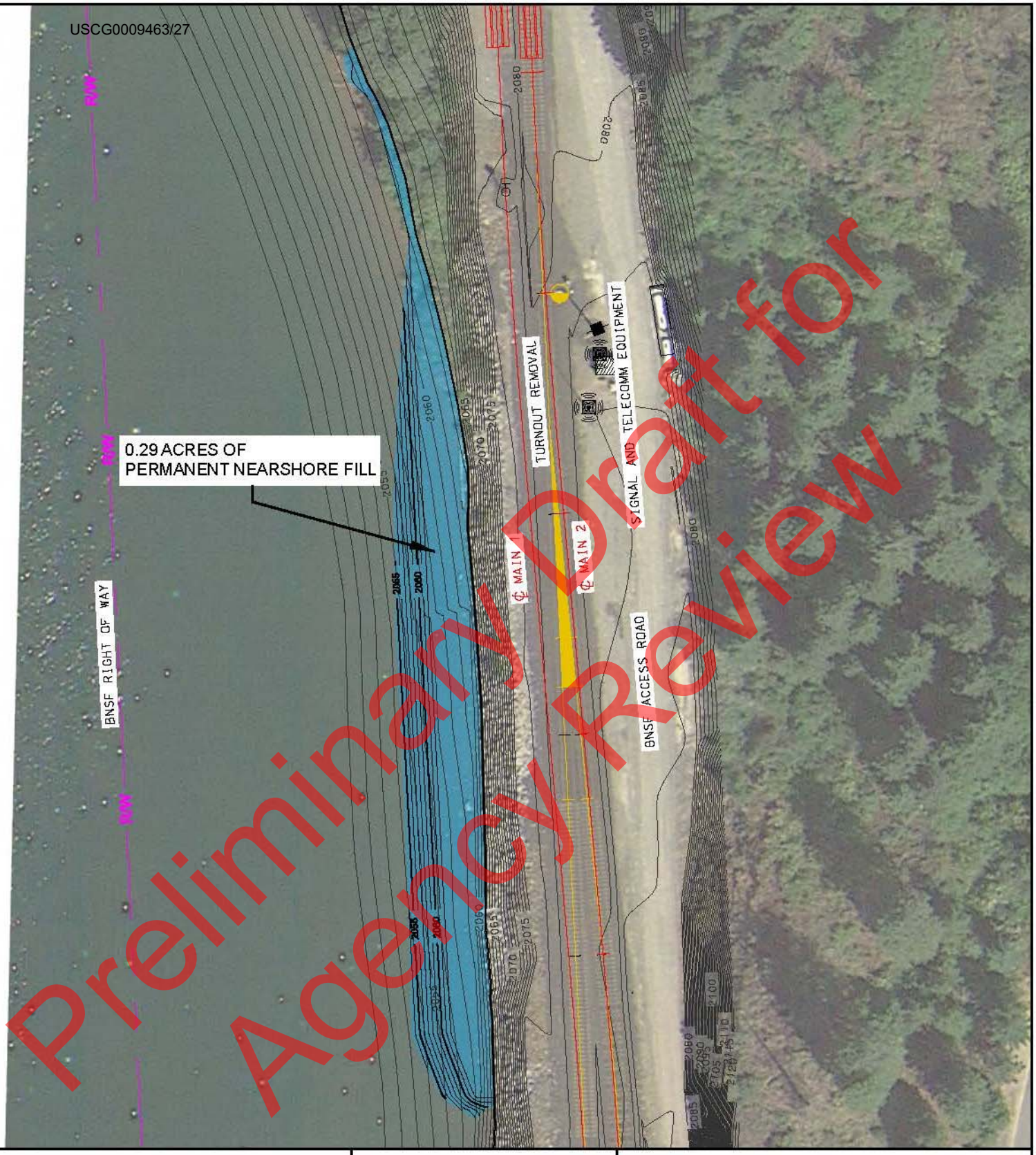

Preliminary Draft for Agency Review

LEGEND

- = EXISTING (TYPICAL)
- = PROPOSED
- = REMOVALS
- = NEARSHORE FILL AREA (PERMANENT)

N

30' 0 15' 30' 60'

GRAPHIC SCALE

JURISDICTIONAL IMPACTS
EAST ALGOMA TURNOUT

PROJECT: BNSF SANDPOINT JUNCTION CONNECTOR
BNSF LOCATION: MONTANA DIVISION, KOOTENAI SUBDIVISION, MP 2.9-5.1
CITY: SANDPOINT
COUNTY: BONNER
STATE: IDAHO
DATE: NOVEMBER 2017

BASED ON: HANSON PRELIMINARY PLANS (30%, NOV. 2017)

Appendix E

Hydraulic Analysis

Preliminary Draft for Agency Review

HANSON

TECHNICAL MEMORANDUM

TO:	BNSF Railway Company
FROM:	Garrett Litteken, P.E., CFM; Tony Comerio, P.E., CFM
DATE:	11/13/2018
SUBJECT:	14R0057 – Bridge 3.1 over Sand Creek H&H Technical Summary

Preliminary Draft for Agency Review

INTRODUCTION

This memorandum summarizes the hydraulic investigation for the proposed Bridge 3.1, which is part of BNSF's Sandpoint Junction Project. BNSF Proposed Bridge No. 3.1 crosses over Sand Creek near its confluence with Lake Pend Oreille in Sandpoint, ID in Bonner County. The proposed bridge will run parallel to the existing 148-foot, 3-span structure. The proposed structure will be constructed upstream of the existing, approximately 26.5-ft on center at its nearest point. FEMA floodplain mapping for Sand Creek indicates that hydraulics are predominantly backwater controlled. Hydrology and downstream boundary conditions were obtained from FEMA data. The FEMA Effective regulatory HEC-2 hydraulics model data along with site survey and LiDAR were utilized to develop a 1-D HEC-RAS model at the bridge.

The existing bridge, Highway 95, and Bridge St. were included in the analysis for floodplain impacts at the railroad bridge. A project location map is provided in Attachment A and site photos are provided in Attachment B.

The proposed bridge structure is within the FEMA regulatory floodway limits and is sufficiently sized to convey Sand Creek with no significant adverse impacts. The proposed bridge opening is less restrictive than the existing bridge. Sand Creek, in the vicinity of the project bridge, is a well maintained recreational area and debris drift is not anticipated to be an issue. The hydraulic analysis utilized HEC-RAS modeling to quantify hydraulic impacts of the proposed design.

DATA COLLECTION

The proposed rail bridge is located near Sand Creek's confluence with Lake Pend Oreille. Hydraulic modeling was extended upstream to include Highway 95 and Bridge St. in order to fully capture potential hydraulic influences of the proposed replacement design. In April 2018, a survey scan of the existing bridge was performed to capture structural details. In addition to the structural scan, hydraulic survey of Sand Creek was performed. Hydraulic survey was limited to the footprint of the existing and proposed rail structures. All survey data, which was used to create the hydraulic models, was collected using the North American Vertical Datum of 1988 (NAVD88).

Upstream channel information was acquired from a combination of LiDAR and FEMA regulatory models covering the project reach. The FEMA Flood Insurance Rate Map (FIRM), effective November 2009, shows the existing bridge is in a Zone AE. This means the floodplain and floodway have been delineated by detailed methods and include Base Flood Elevations (BFE) for the 100-year event. Hanson requested and received the effective HEC-2 model from the FEMA Engineering Library for the area of BNSF expansion. The regulatory FEMA HEC-2 hydraulic model

was used to define the downstream boundary conditions for this analysis. The effective HEC-2 model was developed prior to the completion of Highway 95 Bridge over Sand Creek and does not include model information for the structure. FEMA provided an updated model submitted in support of Conditional Letter of Map Revision (CLOMR) 04-10-0479R for construction of Highway 95. The model incorporated detailed survey of Bridge St., the existing rail bridge, and proposed plans for Highway 95.

In order to accurately depict the study area, the effective HEC-2 model was updated with an existing conditions model which utilized project survey and record bridge drawings. The existing conditions model reflects recent detailed survey, detailed bridge plans, georectified cross-sections, and acquisition of LiDAR. FEMA's CLOMR model was used to provide cross-section data upstream of the project survey, including bridge opening and overtopping information for Highway 95 and Bridge St. The FEMA FIRM and relevant excerpts from the FEMA FIS are provided in Attachment C.

Bonner County LiDAR was used to update the FEMA CLOMR HEC-RAS model floodplain topography above the normal pool water line. 2010 LiDAR data of Bonner County, Idaho was obtained from the USDA/NRCS National Geospatial Center of Excellence. The LiDAR data has a nominal point spacing of 1 meter based on Universal Transverse Mercator Zone 11, related to the North American Datum of 1983, and North American Vertical Datum of 1988 (NAVD88).

HYDROLOGY

The FEMA Effective HEC-2 model and Flood Insurance Study provided discharges for Sand Creek at the project bridge. Sand Creek has an approximate drainage area of 38.5-sq.mi. to its mouth at Lake Pend Oreille. Table 1 shows the resulting discharges from the FEMA FIS at the structure. Relevant excerpts from the FEMA FIS are provided in Attachment C.

Table 1 - Discharge-Frequency Comparison

	Discharge (cfs)
Frequency (Years)	FEMA Effective HEC-2 Model
10	1,455
50	2,280
100	2,820
500	4,015

HYDRAULICS

Hydraulics were developed from a combination of the FEMA model data, detailed bridge plans, LiDAR and project survey data. Three boundary conditions were analyzed to determine impacts under various Lake Pend Oreille backwater conditions. Boundary conditions include a normal depth solution, a summer pool backwater, and the FEMA regulatory backwater. A normal depth boundary slope of 0.0002-ft/ft was acquired from the Effective FEMA HEC-2 model and used to assess normal depth conditions. A known water surface boundary condition was used to establish starting water surface elevations for the backwater models. FEMA flood profiles for Sand Creek are provided in Appendix C, and starting water surface elevations are summarized in Table 2.

Preliminary Draft for Agency Review

Table 2 – HEC-RAS Known Water Surface Boundary

Location	Source	Backwater	Boundary Condition Known W.S. (ft, NAVD88)
Sand Creek	FEMA FIS	Regulatory Pool (100-yr BFE)	2073.7
	Lake Pend Oreille	Summer Pool	2062.5

The US Army Corps of Engineers' HEC-RAS v.5.0.6 program was used to model the creek and Bridge 3.1. The model extends 300-ft downstream of the existing bridge to Sand Creek's confluence with Lake Pend Oreille. Survey of the bridges combined with photos and available construction drawings were used to accurately define the existing and proposed structures. The FEMA HEC-RAS CLOMR model was used to inform upstream bridge and channel geometry. The HEC-RAS model calculates water surface elevations along the Sand Creek floodplain for a 0.4-mile reach near the existing rail crossing. The existing 3-span bridge (48.3'-51.7'-48.3') has an total length of 148.23-feet from abutment to abutment. This establishes baseline conditions for comparison with the proposed replacement design. Existing bridge plans are provided in Attachment E.

A proposed conditions model was developed to analyze potential impacts from the construction of the proposed parallel bridge crossing upstream of the existing rail structure. Per HEC-RAS Hydraulic Reference Manual Version 5.0, the existing and proposed bridge were modeled as a combined bridge deck due to their proximity. The existing bridge was modeled as the downstream face of the hydraulic structure and the proposed bridge was modeled as the upstream face of the deck. The structures were sufficiently far apart that they were assumed not to impact the hydraulic opening of the parallel bridge face. The proposed structure provides a wider hydraulic opening than the existing bridge. The proposed bridge piers are not in-line with the existing structure to provide a wider navigational opening for recreational traffic. The piers are sufficiently spaced that they are not anticipated to experience an aggregated hydraulic influence with the existing piers. A hydraulic cross-section location map is provided in Attachment D.

The proposed replacement structure utilizes a 12-span design and increased bridge main span length, which improves the hydraulic capacity of the structure. Due to the proximity of the structures, only four of the proposed bridge spans are able to actively convey flow. The proposed structure will provide an effective hydraulic opening of approximately 161.4-ft at its upstream face. Proposed bridge plans are provided in Attachment F.

Floodplain Permitting

The hydraulic model investigation indicates that the proposed rail bridge creates less than a 0.0-ft impact in the 100-year (1% annual chance flood) water surface elevation under normal depth conditions, less than a 0.0-ft impact under Lake Pend Oreille summer pool backwater conditions, and less than 0.0-ft impact under FEMA regulatory pool backwater conditions. Based on the results of the hydraulic investigation, the proposed structure meets the intent of FEMA "No-Rise" Certification criteria. A summary of HEC-RAS model output comparison between the existing and proposed conditions is provided in Attachment G.

Preliminary Draft for Agency Review

List of Attachments:

Attachment A - Project Location Map
Attachment B - Site Photos
Attachment C - FEMA FIS and FIRM
Attachment D - Hydraulic Cross-Section Map
Attachment E - Existing Bridge Plans
Attachment F - Proposed Bridge Plans
Attachment G - HEC-RAS Output

Preliminary Draft for Agency Review

Preliminary Draft for Agency Review

Attachment A – Project Location Map

USCG0009533/27

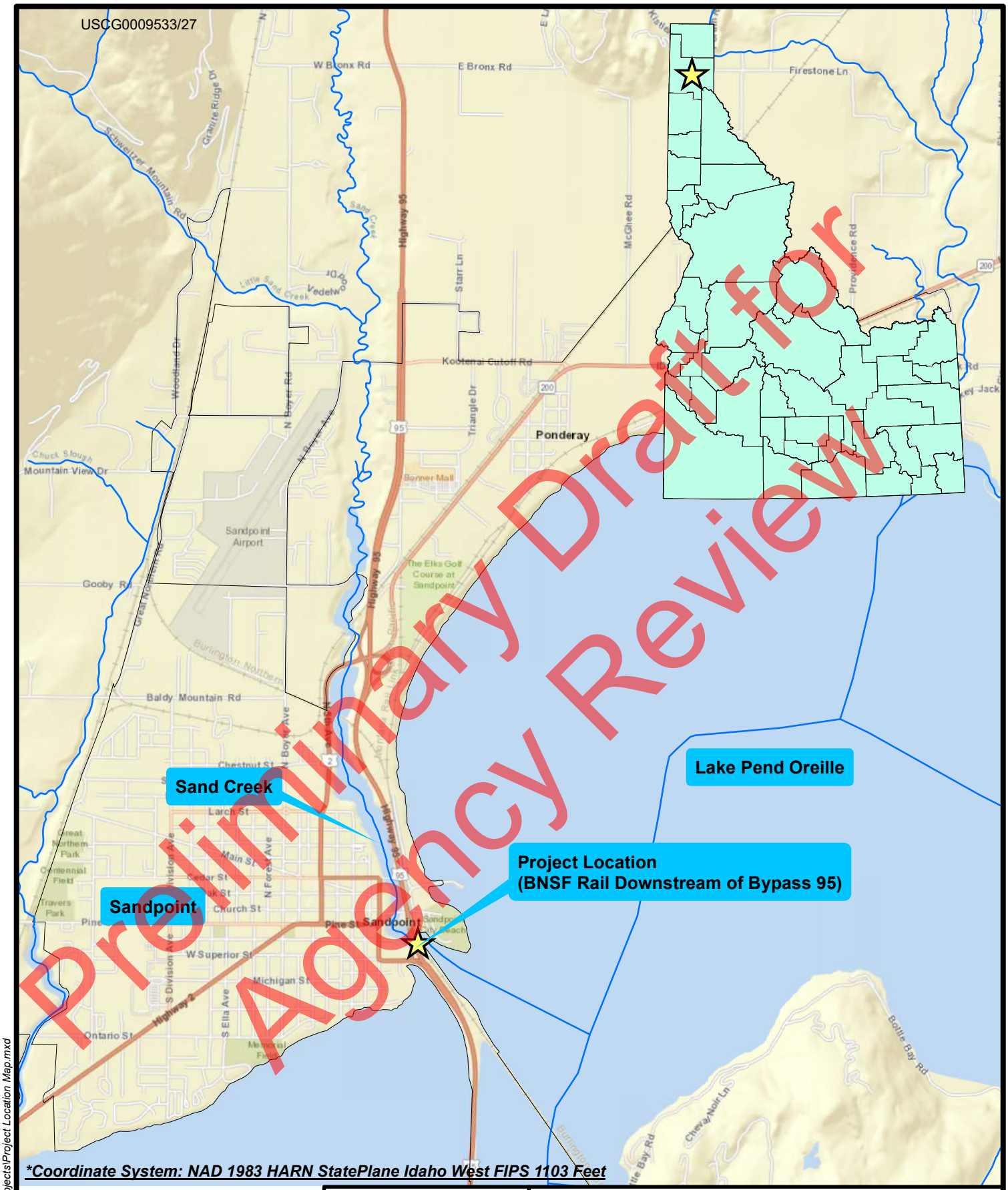

Coordinate System: NAD 1983 HARN StatePlane Idaho West FIPS 1103 Feet

0 1,500 3,000 Feet

1 in = 3,000 ft

N W E S

HANSON

Hanson Professional Services Inc.

Project Location Map

BNSF Railway Company
Bridge 3.1 Over Sand Creek
Sandpoint, Idaho

Job Number: 14R0057

I:\14jobs\14R0057\CAD\GIS\Projects\Project Location Map.mxd

Preliminary Draft for Agency Review

Attachment B – Site Photos

USCG0009553/27

Photograph 1 – Existing Bridge on Sand Creek at confluence with Lake Pend Oreille looking Upstream (west)

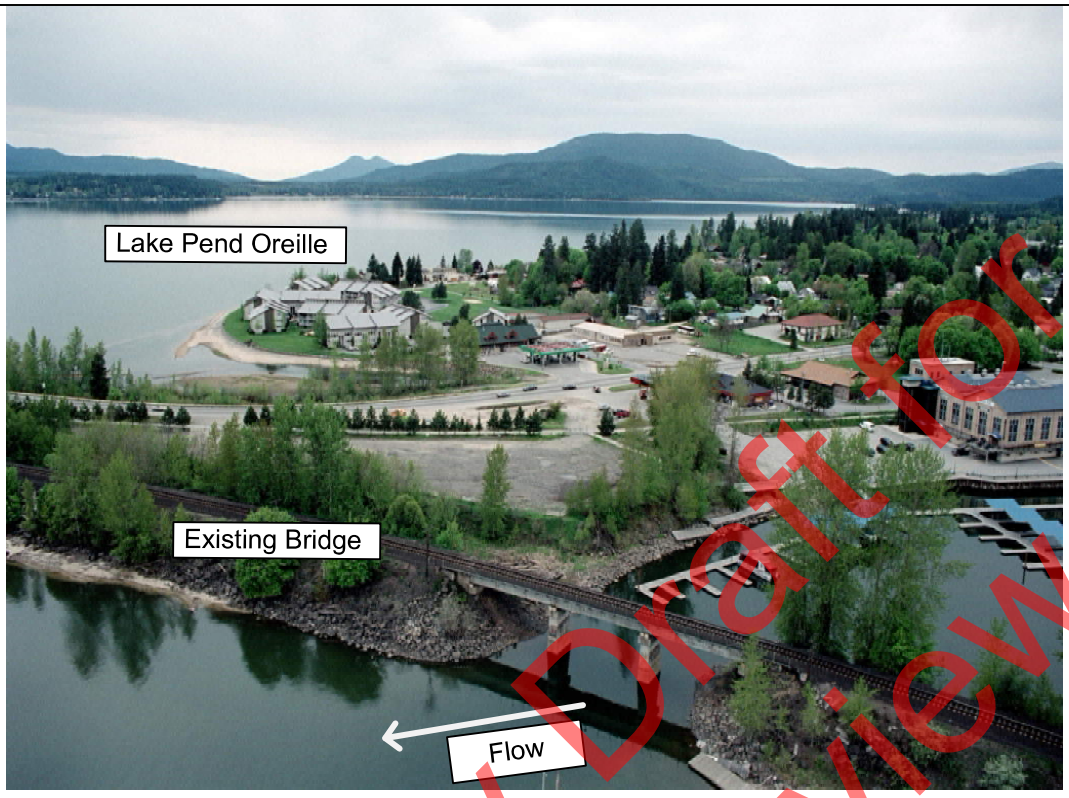

Photograph 2 – Left abutment of Existing Bridge looking Downstream (northeast)

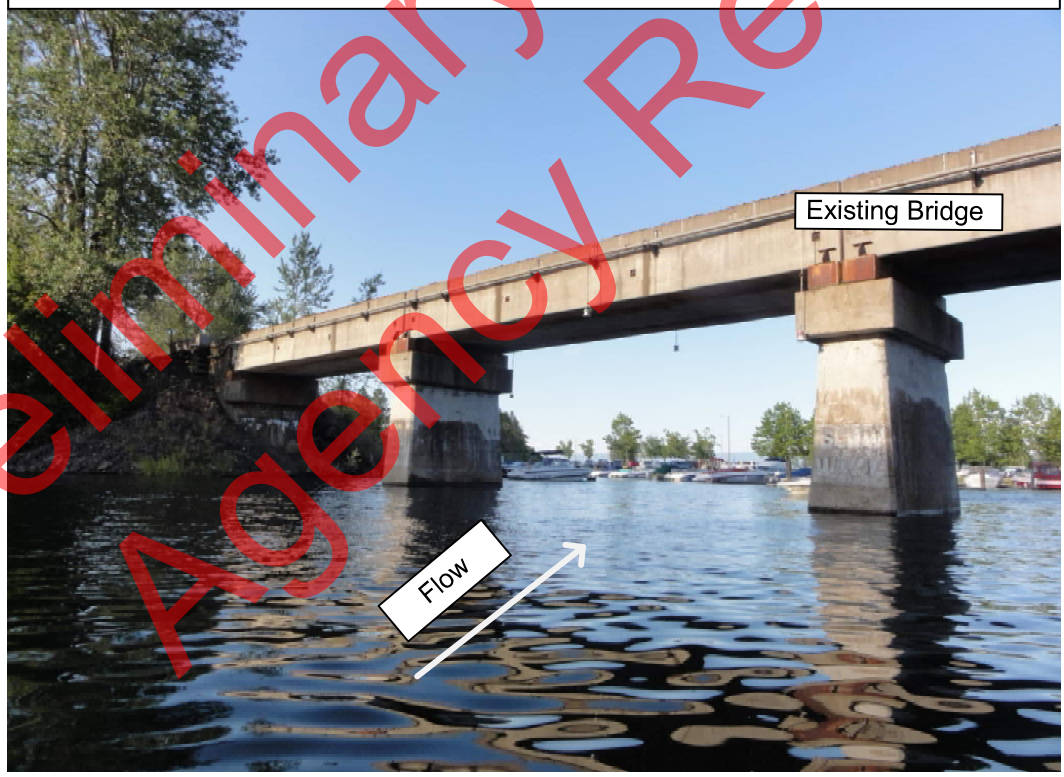

Preliminary Draft for Agency Review

© Copyright Hanson Professional Services Inc. 2018

HANSON
HANSON PROFESSIONAL SERVICES INC.

Photographs

BNSF Railway Company
Bridge 3.1 Over Sand Creek
Sandpoint, Idaho

Hanson No. 14R0057

I:\14jobs\14R0057\Admin\14-Reports\H&H\Sand Creek\Attachment B - Site Photos\Photos\Bridge3-1_Photographs.vsd

Photograph 3 – Left abutment of Existing Bridge looking north

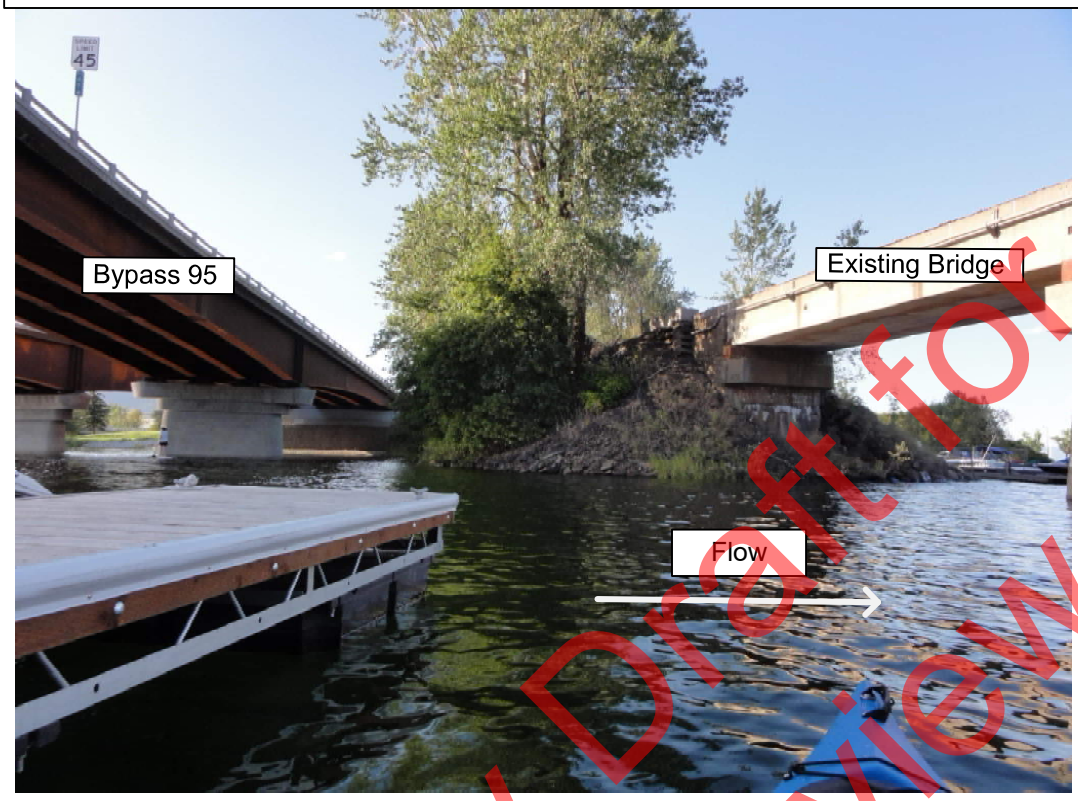

Photograph 4 – Left abutment of Existing Bridge looking north

Preliminary Draft for Agency Review

© Copyright Hanson Professional Services Inc. 2018

HANSON
HANSON PROFESSIONAL SERVICES INC.

Photographs

BNSF Railway Company
Bridge 3.1 Over Sand Creek
Sandpoint, Idaho

I:\14jobs\14R0057\Admin\14-Reports\H&H\Sand Creek\Attachment B - Site Photos\Photos\Bridge3-1_Photographs.vsd

Photograph 5 – Left abutment of Existing Bridge looking north

Photograph 6 – Right abutment of Existing Bridge looking Downstream (southeast)

Preliminary Draft for Agency Review

© Copyright Hanson Professional Services Inc. 2018

HANSON
HANSON PROFESSIONAL SERVICES INC.

Photographs

BNSF Railway Company
Bridge 3.1 Over Sand Creek
Sandpoint, Idaho

I:\14jobs\14R0057\Admin\14-Reports\H&H\Sand Creek\Attachment B - Site Photos\Photos\Bridge3-1_Photographs.vsd

Preliminary Draft for Agency Review

Attachment C – FEMA FIS and FIRM

National Flood Hazard Layer FIRMette

USGG0009593/27

FEMA

48°16'31.62"N

116°32'57.66"W

116°32'20.20"W

48°16'7.67"N

Feet

0 250 500 1,000 1,500 2,000

1:6,000

Legend

SEE FIS REPORT FOR DETAILED LEGEND AND INDEX MAP FOR FIRM PANEL LAYOUT

SPECIAL FLOOD HAZARD AREAS
- Without Base Flood Elevation (BFE) *Zone A, V, A99*
- With BFE or Depth *Zone AE, AO, AH, VE, AR*
- Regulatory Floodway

OTHER AREAS OF FLOOD HAZARD
- 0.2% Annual Chance Flood Hazard, Areas of 1% annual chance flood with average depth less than one foot or with drainage areas of less than one square mile *Zone X*
- Future Conditions 1% Annual Chance Flood Hazard *Zone X*
- Area with Reduced Flood Risk due to Levee. See Notes. *Zone X*
- Area with Flood Risk due to Levee *Zone D*

OTHER AREAS
- NO SCREEN Area of Minimal Flood Hazard *Zone X*
- Effective LOMRs
- Area of Undetermined Flood Hazard *Zone D*

GENERAL STRUCTURES
- Channel, Culvert, or Storm Sewer
- Levee, Dike, or Floodwall

OTHER FEATURES
- B 20.2 17.5 Cross Sections with 1% Annual Chance Water Surface Elevation
- 8 Coastal Transect
- 513 Base Flood Elevation Line (BFE)
- Limit of Study
- Jurisdiction Boundary
- Coastal Transect Baseline
- Profile Baseline
- Hydrographic Feature

MAP PANELS
- Digital Data Available
- No Digital Data Available
- Unmapped

N

The pin displayed on the map is an approximate point selected by the user and does not represent an authoritative property location.

This map complies with FEMA's standards for the use of digital flood maps if it is not void as described below. The basemap shown complies with FEMA's basemap accuracy standards

The flood hazard information is derived directly from the authoritative NFHL web services provided by FEMA. This map was exported on 9/13/2018 at 5:34:49 PM and does not reflect changes or amendments subsequent to this date and time. The NFHL and effective information may change or become superseded by new data over time.

This map image is void if the one or more of the following map elements do not appear: basemap imagery, flood zone labels, legend, scale bar, map creation date, community identifiers, FIRM panel number, and FIRM effective date. Map images for unmapped and unmodernized areas cannot be used for regulatory purposes.

Preliminary Draft for Agency Review

USCG0009603/27

FLOOD INSURANCE STUDY

BONNER COUNTY, IDAHO AND INCORPORATED AREAS

COMMUNITY NAME	COMMUNITY NUMBER
BONNER COUNTY, UNINCORPORATED AREAS	160206
CLARK FORK, CITY OF	160132
DOVER, CITY OF	160006
EAST HOPE, CITY OF	160237
HOPE, CITY OF	160238
*KOOTENAI, CITY OF	160052
OLDTOWN, CITY OF	160073
PONDERAY, CITY OF	160150
PRIEST RIVER, CITY OF	160026
SANDPOINT, CITY OF	160025

*No Special Flood Hazard Areas Identified

Preliminary Draft for Agency Review

REVISED
July 7, 2014

Federal Emergency Management Agency

Flood Insurance Study Number
16017CV000B

Table 5. Summary of Discharges (continued)

Flooding Source and Location	Drainage Area (Square Miles)	Peak Discharges (Cubic Feet per Second) 10-Percent-Annual-Chance	2-Percent-Annual-Chance	1-Percent-Annual-Chance	0.2-Percent-Annual-Chance
Priest River					
At Mouth	907	9,050	10,550	11,100	12,200
Near McAbee Falls	861	8,500	10,000	10,600	11,900
Above Midpoint on Section Line 27/28	795	8,300	9,700	10,300	11,600
Above East River	726	8,000	9,400	10,000	11,200
Rapid Lightning Creek					
At Mouth	48.0	1,750	2,800	3,450	5,000
Above Cross Section BO	34.1	1,300	2,050	2,550	3,550
Above Spring Creek	28.6	1,150	1,750	2,150	3,000
Sand Creek North					
At Mouth	17.0	750	1,100	1,350	1,900
Sand Creek					
At mouth	38.5	1,455	2,280	2,820	4,015
Above Little Sand Creek	23.2	960	1,455	1,780	2,510
Above Schweitzer Creek	16.1	715	1,065	1,295	1,830
Above Cross Section AS	12.1	575	840	1,020	1,445
Above Cross Section AW	8.3	435	625	760	1,075
Above Swede Creek	6.8	375	535	660	915
Above Cross Section BC	4.0	260	395	470	660
Above Jack Creek	2.1	185	295	360	510
Spring Creek					
At Mouth	11.2	550	800	950	1,350
Above Cross Section AA	9.7	500	700	850	1,200

[1]Flows Routed by Burlington Northern Railroad Embankment
[2]Data Not Available

Preliminary Draft for Agency Review

Table 6. Roughness Coefficients - Range of Manning's "n"

	Channel	Overbank Flood Plain
Clark Fork	0.031	0.060 to 0.120
Grouse Creek	0.055	0.070 to 0.140
Lightning Creek	0.048 to 0.070	0.080 to 0.250
Mosquito Creek	0.055 to 0.060	0.060 to 0.150
Pack River	0.048 to 0.055	0.085 to 0.175
Priest River	0.040 to 0.155	0.040 to 0.200
Rapid Lightning Creek	0.040 to 0.070	0.040 to 0.200
Sand Creek North	0.070 to 0.080	0.140 to 0.200
Sand Creek	0.045 to 0.065	0.045 to 0.200
Spring Creek	0.070 to 0.095	0.080 to 0.350

Starting water-surface elevations for all streams were calculated using slope-area methods. Backwater at confluences with larger river systems or lakes are shown at the most downstream reaches of the smaller tributary stream on the flood profiles.

The hydraulic analyses for this study were based on unobstructed flow. The flood elevations shown on the profiles are thus considered valid only if hydraulic structures remain unobstructed and do not fail.

Hydraulic analyses of the outlet structures for Cocalalla and Kelso Lakes were conducted in order to provide rating for outflow from the lakes. All structures were measured by field surveys.

It was agreed between the Federal Emergency Management Agency and the study contractor to consider wave height analyses for Lake Pend Oreille only. Significant wave height was calculated using procedures as outlined in ETL-1110-2-221 (References 16 and 17). Input for the calculations included wind direction, duration, and speed along with reservoir shape and size. The calculated wave height was added as a surcharge to the 1-percent-annual-chance stillwater lake elevation. No wave runup analysis was conducted. No analyses of wave height or runup were conducted for any of the additional lakes studied in Bonner County.

Streams and rivers, selected for study by approximate methods, were analyzed by some combination of these five criteria: (1) correlation considering size of drainage area, slope, vegetative cover, and hydraulic conditions with other streams studied by detailed methods within the region; (2) field reconnaissance and historical accounts using information provided by local residents familiar with flooded areas and boundaries during past flooding events; (3) correlation with the U.S. Geological Survey maps of flood-prone areas; (4) correlation with flood boundaries as outlined on the Special Flood Hazard Boundary Map for Bonner County (Reference 20); and (5) engineering judgment.

3.3 Vertical Datum

All FIS reports and FIRMs are referenced to a specific vertical datum. The vertical datum provides a starting point against which flood, ground, and structure elevations can be referenced and compared. Until recently, the standard vertical datum used for newly created or revised FIS reports and FIRMs was the National Geodetic Vertical Datum of 1929 (NGVD 29). With the completion of the North American Vertical Datum of 1988 (NAVD

Preliminary Draft for Agency Review

88), many FIS reports and FIRMs are now prepared using NAVD 88 as the referenced vertical datum.

To accurately convert flood elevations for the streams and rivers in Bonner County from the current NGVD 29 datum to the newer NAVD 88 datum, the following procedure was implemented. Locations at the upstream and downstream ends of each flooding source, as well as at an intermediate location between these two end points, were evaluated using the COE CORPSCON (Reference 21) vertical datum conversion software. At each of the three points CORPSCON calculated the difference between NGVD 29 and NAVD 88 elevations. These three conversion factors were averaged to develop and average conversion factor for each flooding source. The final NAVD 88 elevations reported herein were computed by adding the calculated average conversion factor to the existing NGVD 29 data. Table 7 shows the conversion factor for each stream studied in detail.

Flood elevations shown in this FIS report and on the FIRMs are referenced to NAVD 88. These flood elevations must be compared to structure and ground elevations referenced to the same vertical datum. For information regarding conversion between the NGVD and the NAVD, visit the National Geodetic Survey website at www.ngs.noaa.gov, or contact the National Geodetic Survey at the following address:

NGS Information Services
NOAA, N/NGS12
National Geodetic Survey
SSMC-3, #9202
1315 East-West Highway
Silver Spring, Maryland 20910-3282
(301) 713-3242
(301) 713-4172 (fax)

Table 7. Vertical Datum Conversion Factors

	Conversion from NGVD 29 to NAVD 88 (feet)			
Stream Name	Minimum Conversion	Maximum Conversion	Average Conversion[1]	Maximum Offset
Clark Fork River	3.86	3.90	3.88	0.02
Grouse Creek	3.86	3.87	3.86	0.01
Lightning Creek	3.88	3.98	3.91	0.07
Mosquito Creek	3.87	3.88	3.88	0.00
Pack River	3.88	3.89	3.89	0.01
Pend Oreille River	3.85	3.87	3.86	0.01
Lake Pend Oreille	3.86	3.87	3.87	0.01
Priest River	3.90	3.95	3.92	0.03
Rapid Lightning Creek	3.90	3.93	3.91	0.02
Sand Creek North	3.86	3.88	3.87	0.01
Sand Creek	3.88	3.90	3.89	0.01
Spring Creek	3.88	3.96	3.92	0.04

[1] Used to convert elevation data from NGVD 29 to NAVD 88.

Temporary vertical monuments are often established during the preparation of a flood hazard analysis for the purpose of establishing local vertical control. Although these monuments are not shown on the FIRM, they may be found in the Technical Support Data Notebook associated with the FIS report and the FIRMs for this community. Interested individuals

Preliminary Draft for Agency Review

FLOODING SOURCE		FLOODWAY			1-PERCENT-ANNUAL-CHANCE FLOOD WATER SURFACE ELEVATION			
CROSS SECTION	DISTANCE[1]	WIDTH (FEET)	SECTION AREA (SQ. FEET)	MEAN VELOCITY (FEET/SEC)	REGULATORY (FEET NAVD)	WITHOUT FLOODWAY (FEET NAVD)	WITH FLOODWAY (FEET NAVD)	INCREASE (FEET)
Sand Creek								
A	-5,603	365	2,367	1.2	2,073.7	2,064.3[2]	2,064.6[2]	0.3
B	-5,203	273	1,649	1.7	2,073.7	2,064.4[2]	2,064.7[2]	0.3
C	-4,518	234	1,470	1.9	2,073.7	2,064.6[2]	2,064.9[2]	0.3
D	-3,640	359	2,060	1.4	2,073.7	2,064.8[2]	2,065.1[2]	0.3
E	-2,225	399	2,083	1.4	2,073.7	2065.1[2]	2065.4[2]	0.3
F	-1,615	639	3,574	0.8	2,073.7	2065.2[2]	2065.4[2]	0.2
G	-935	188	1,138	2.5	2,073.7	2065.4[2]	2065.6[2]	0.2
H	-315	301	1,811	1.6	2,073.7	2065.7[2]	2066.0[2]	0.3
I	264	416	2,418	1.2	2,073.7	2065.8[2]	2066.1[2]	0.3
J	874	471	2,568	1.1	2,073.7	2066.0[2]	2066.3[2]	0.3
K	1,596	103	535	5.3	2,073.7	2067.8[2]	2067.8[2]	0.0
L	1,951	99	416	6.8	2,073.7	2068.8[2]	2068.8[2]	0.0
M	2,366	285	2,449	1.2	2,073.7	2070.0[2]	2070.3[2]	0.3
N	3,176	330	2,608	1.1	2,073.7	2070.0[2]	2070.3[2]	0.3
O	3,846	288	2,282	1.2	2,073.7	2070.2[2]	2070.5[2]	0.3
P	4,200	265	2,500	1.1	2,073.7	2071.7[2]	2071.9[2]	0.2
Q	5,130	380	3,348	0.8	2,073.7	2071.8[2]	2072.0[2]	0.2
R	5,895	361	2,891	1.0	2,073.7	2071.9[2]	2072.1[2]	0.2
S	6,560	381	2,907	1.0	2,073.7	2071.9[2]	2072.1[2]	0.2
T	8,800	229	1,460	1.9	2,073.7	2072.6[2]	2073.0[2]	0.4
U	9,695	209	1,204	2.3	2,073.7	2073.2[2]	2073.7[2]	0.5
V	10,240	189	736	3.8	2,074.6	2,074.6	2,075.2	0.6
W	10,505	377	2,516	1.1	2,077.2	2,077.2	2,077.5	0.3
X	11,260	248	1,158	2.4	2,077.9	2,077.9	2,078.4	0.5
Y	12,535	141	479	3.7	2,082.0	2,082.0	2,082.6	0.6
Z	13,395	104	481	3.7	2,085.2	2,085.2	2,085.6	0.4
AA	14,160	188	1,133	1.6	2,086.5	2,086.5	2,087.0	0.5
AB	15,560	155	1,232	1.4	2,087.5	2,087.5	2,088.2	0.7

[1]Feet above Burlington Northern Railroad [2]Elevation computed without consideration of backwater from Lake Pend Oreille

Preliminary Draft for Agency Review

TABLE 8

FEDERAL EMERGENCY MANAGEMENT AGENCY

BONNER COUNTY, IDAHO

AND INCORPORATED AREAS

FLOODWAY DATA

SAND CREEK

FLOODING SOURCE		FLOODWAY			1-PERCENT-ANNUAL-CHANCE FLOOD WATER SURFACE ELEVATION			
CROSS SECTION	DISTANCE[1]	WIDTH (FEET)	SECTION AREA (SQ. FEET)	MEAN VELOCITY (FEET/SEC)	REGULATORY (FEET NAVD)	WITHOUT FLOODWAY (FEET NAVD)	WITH FLOODWAY (FEET NAVD)	INCREASE (FEET)
Sand Creek (Con't)								
AC	16,090	114	975	1.8	2,087.8	2,087.8	2,088.5	0.7
AD	16,505	86	689	2.6	2,088.0	2,088.0	2,088.8	0.8
AE	16,870	101	667	2.7	2,088.4	2088.4	2089.2	0.8
AF	17,865	156	1,336	1.3	2,089.2	2089.2	2090.0	0.8
AG	20,385	150	792	2.2	2,091.7	2091.7	2092.7	1.0
AH	21,072	175	1,213	1.5	2,093.3	2093.3	2094.3	1.0
AI	22,092	416	2,155	0.8	2,093.9	2093.9	2094.9	1.0
AJ	23,437	220	827	2.2	2,095.3	2095.3	2095.9	0.6
AK	24,107	261	1,152	1.5	2,096.5	2096.5	2097.0	0.5
AL	25,252	179	764	2.3	2,098.0	2098.0	2098.5	0.5
AM	26,132	322	1,256	1.4	2,099.2	2099.2	2099.7	0.5
AN	26,697	164	482	2.7	2,100.6	2100.6	2101.0	0.4
AO	27,367	126	648	2.0	2,102.3	2102.3	2102.7	0.4
AP	28,312	320	1,313	1.0	2,103.4	2103.4	2103.9	0.5
AQ	30,392	107	494	2.6	2,106.8	2106.8	2107.4	0.6
AR	31,347	86	545	2.4	2,108.3	2108.3	2109.1	0.8
AS	33,030	236	1,014	1.3	2,110.9	2110.9	2111.7	0.8
AT	35,405	185	753	1.4	2,115.1	2115.1	2115.8	0.7
AU	36,260	106	515	2.0	2,116.8	2116.8	2117.5	0.7
AV	36,614	122	718	1.4	2,118.9	2,118.9	2,119.3	0.4
AW	37,604	59	323	3.2	2,120.8	2,120.8	2,121.7	0.9
AX	38,719	59	291	2.6	2,123.7	2,123.7	2,124.6	0.9
AY	39,549	116	615	1.2	2,124.9	2,124.9	2,125.8	0.9
AZ	39,850	76	426	1.8	2,125.7	2,125.7	2,126.2	0.5
BA	40,775	51	273	2.8	2,127.3	2,127.3	2,128.0	0.7
BB	41,755	61	350	1.9	2,129.4	2,129.4	2,130.3	0.9
BC	42,173	56	355	1.9	2,130.5	2,130.5	2,131.3	0.8

[1]Feet above Burlington Northern Railroad

Preliminary Draft for Agency Review

TABLE 8

FEDERAL EMERGENCY MANAGEMENT AGENCY

BONNER COUNTY, IDAHO

AND INCORPORATED AREAS

FLOODWAY DATA

SAND CREEK

FLOODING SOURCE		FLOODWAY			1-PERCENT-ANNUAL-CHANCE FLOOD WATER SURFACE ELEVATION			
CROSS SECTION	DISTANCE[1]	WIDTH (FEET)	SECTION AREA (SQ. FEET)	MEAN VELOCITY (FEET/SEC)	REGULATORY (FEET NAVD)	WITHOUT FLOODWAY (FEET NAVD)	WITH FLOODWAY (FEET NAVD)	INCREASE (FEET)
Sand Creek (Con't)								
BD	42,743	46	146	3.2	2,131.9	2,131.9	2,132.8	0.9
BE	43,323	82	326	1.4	2,133.5	2133.49	2134.39	0.9
BF	44,298	29	132	3.6	2,136.3	2136.29	2137.09	0.9
BG	45,293	28	114	4.1	2,141.2	2141.19	2142.19	1.0
BH	45,993	48	215	2.2	2,143.3	2143.29	2143.99	0.7
BI	46,350	111	547	0.7	2,145.0	2144.99	2145.49	0.5
BJ	46,970	136	520	0.7	2,145.4	2145.39	2145.89	0.5
BK	47,805	112	268	1.3	2,147.4	2147.39	2147.79	0.4

[1]Feet above Burlington Northern Railroad

Preliminary Draft for Agency Review

TABLE 8

FEDERAL EMERGENCY MANAGEMENT AGENCY

BONNER COUNTY, IDAHO

AND INCORPORATED AREAS

FLOODWAY DATA

SAND CREEK

USCG0009673/27

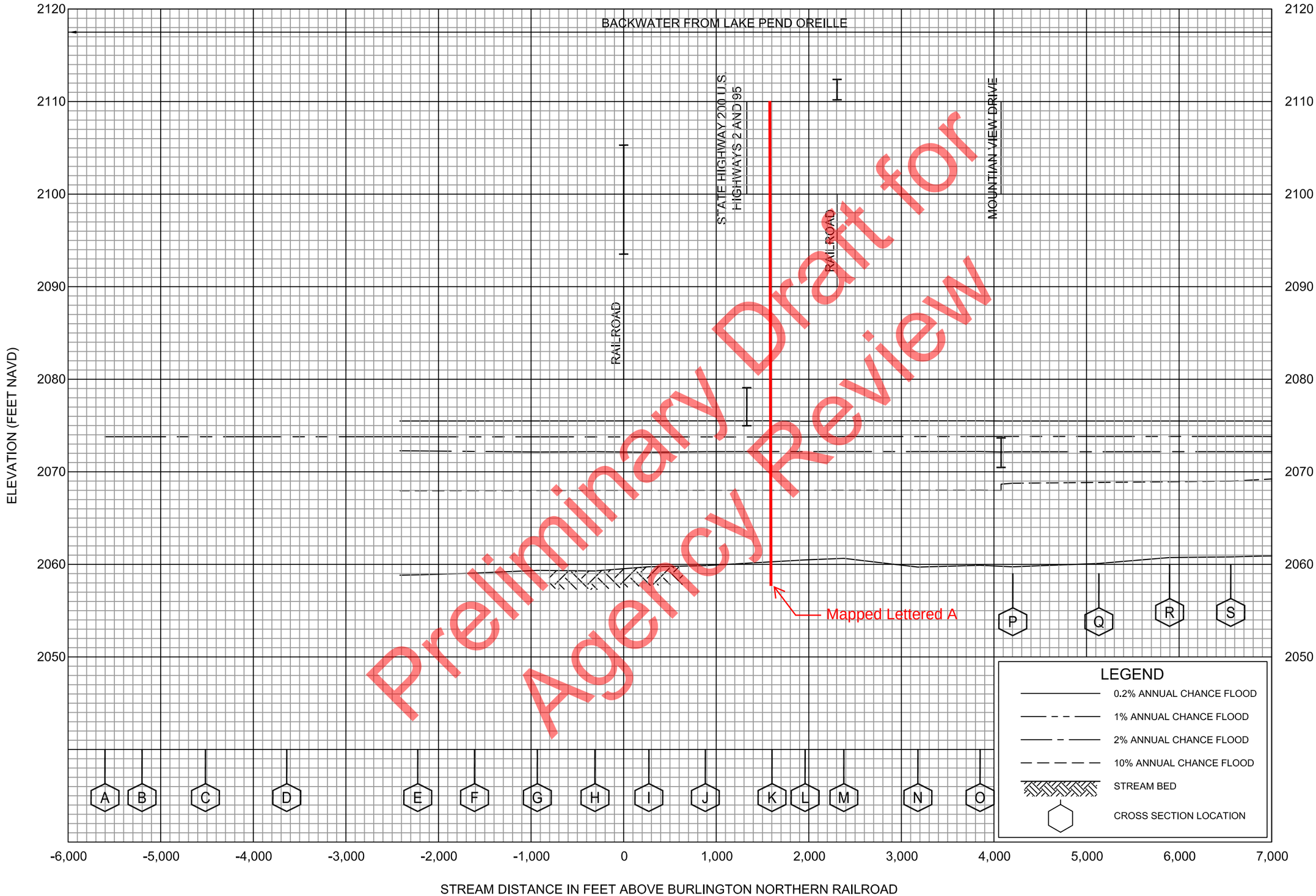

Preliminary Draft for Agency Review

FLOOD PROFILES

SAND CREEK

FEDERAL EMERGENCY MANAGEMENT AGENCY

BONNER COUNTY, ID

AND INCORPORATED AREAS

USCG0009683/27

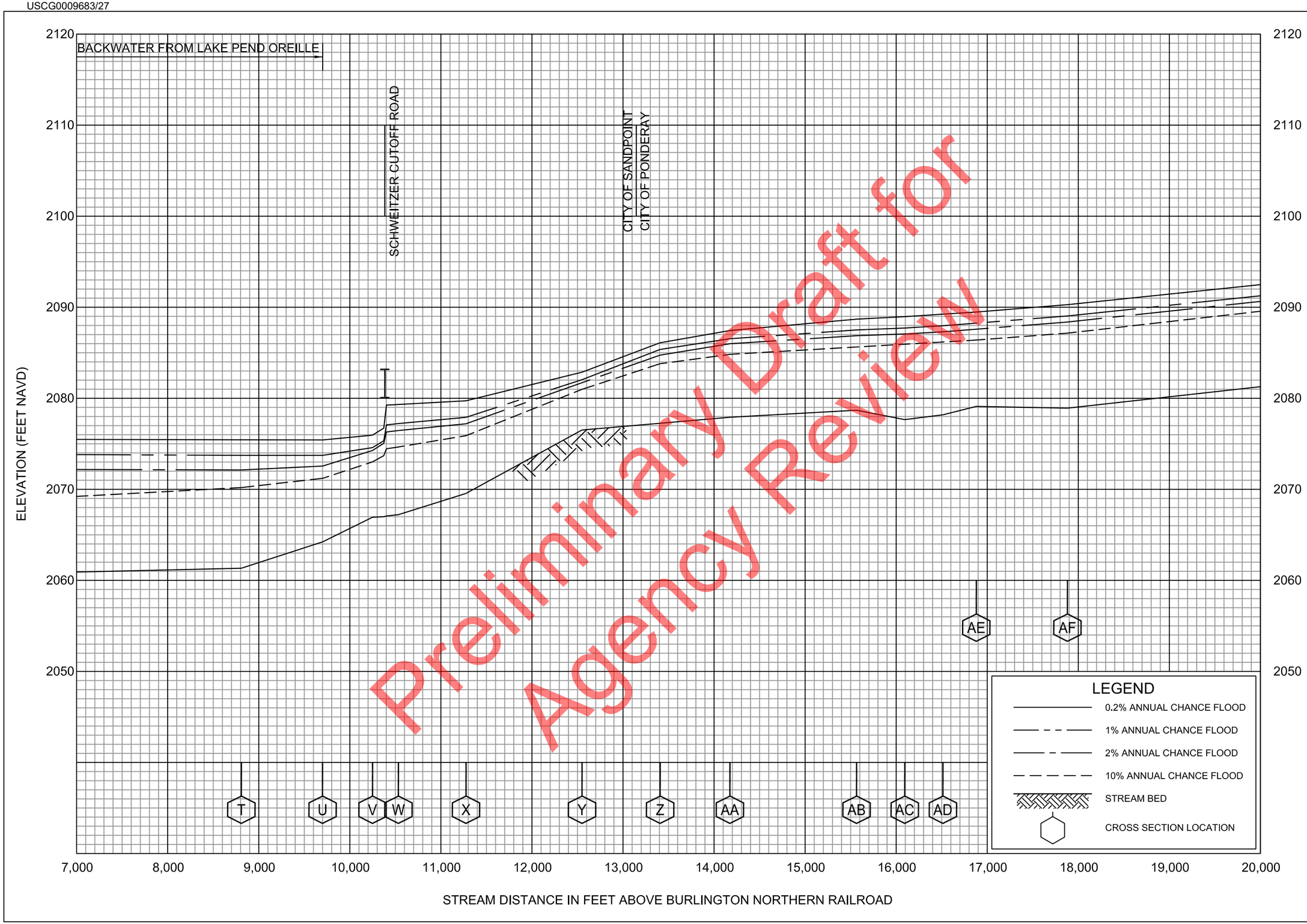

Preliminary Draft for Agency Review

FLOOD PROFILES

SAND CREEK

FEDERAL EMERGENCY MANAGEMENT AGENCY

BONNER COUNTY, ID

AND INCORPORATED AREAS

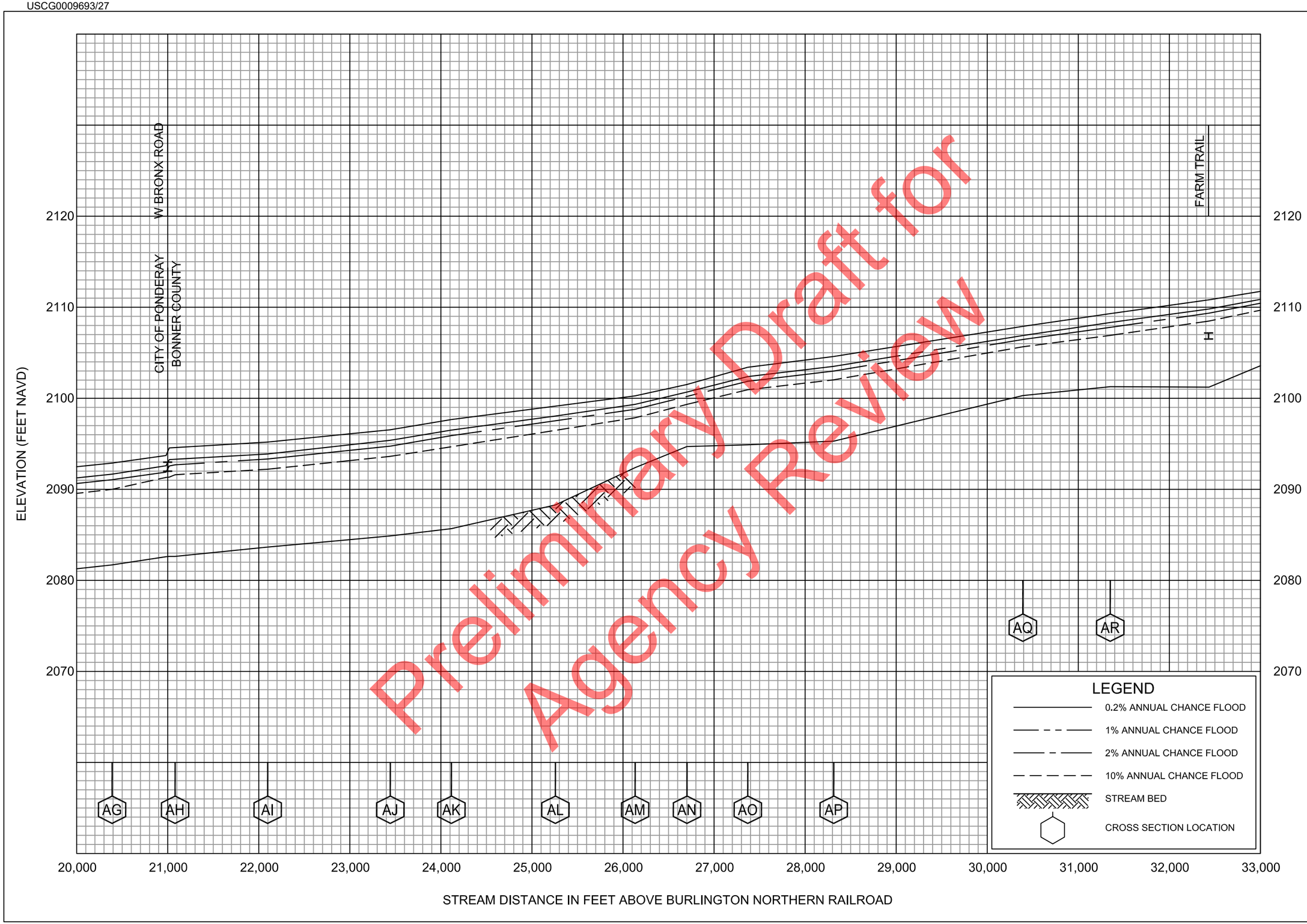

Preliminary Draft for Agency Review

FLOOD PROFILES

SAND CREEK

FEDERAL EMERGENCY MANAGEMENT AGENCY

BONNER COUNTY, ID

AND INCORPORATED AREAS

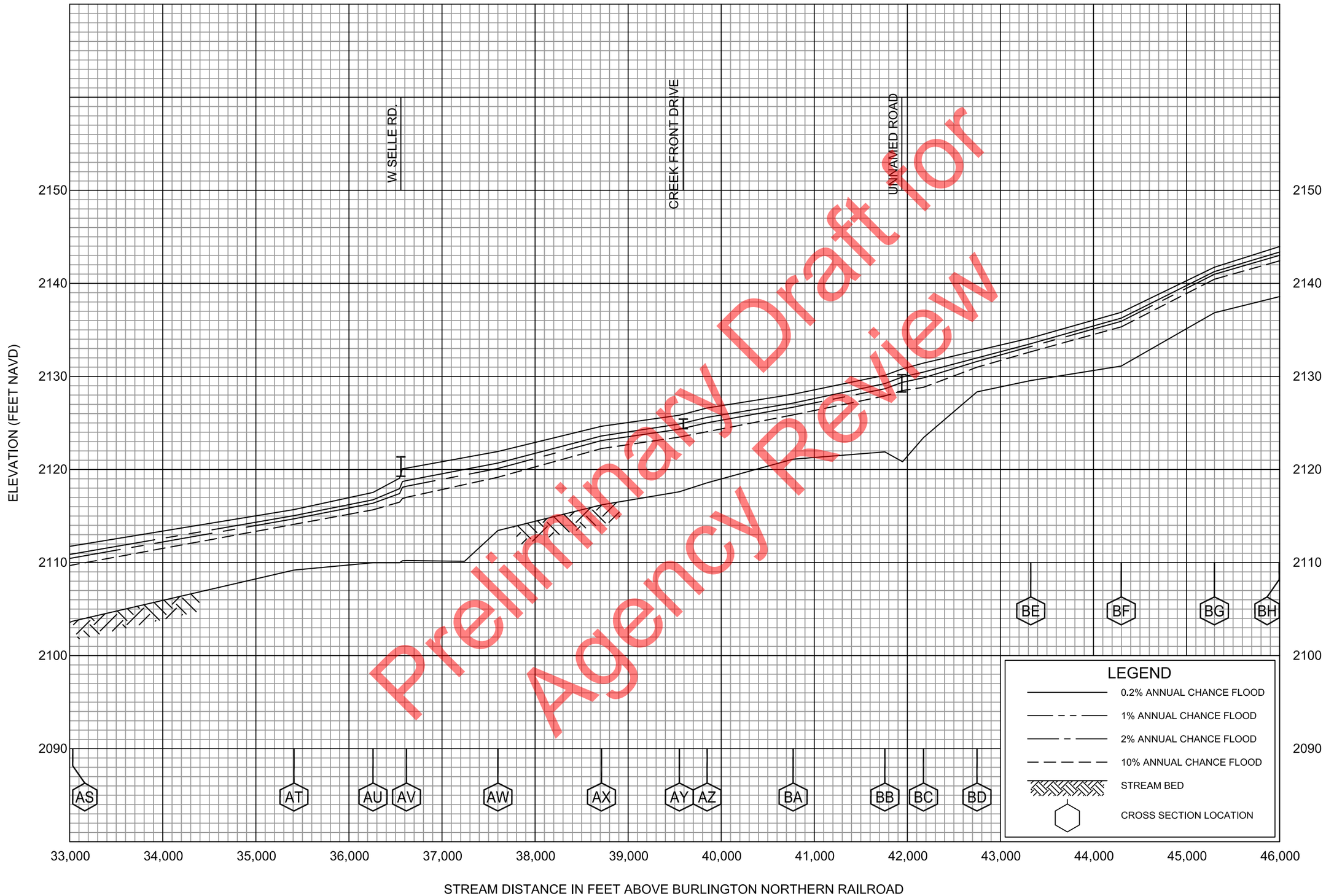

Preliminary Draft for Agency Review

FLOOD PROFILES

SAND CREEK

FEDERAL EMERGENCY MANAGEMENT AGENCY

BONNER COUNTY, ID

AND INCORPORATED AREAS

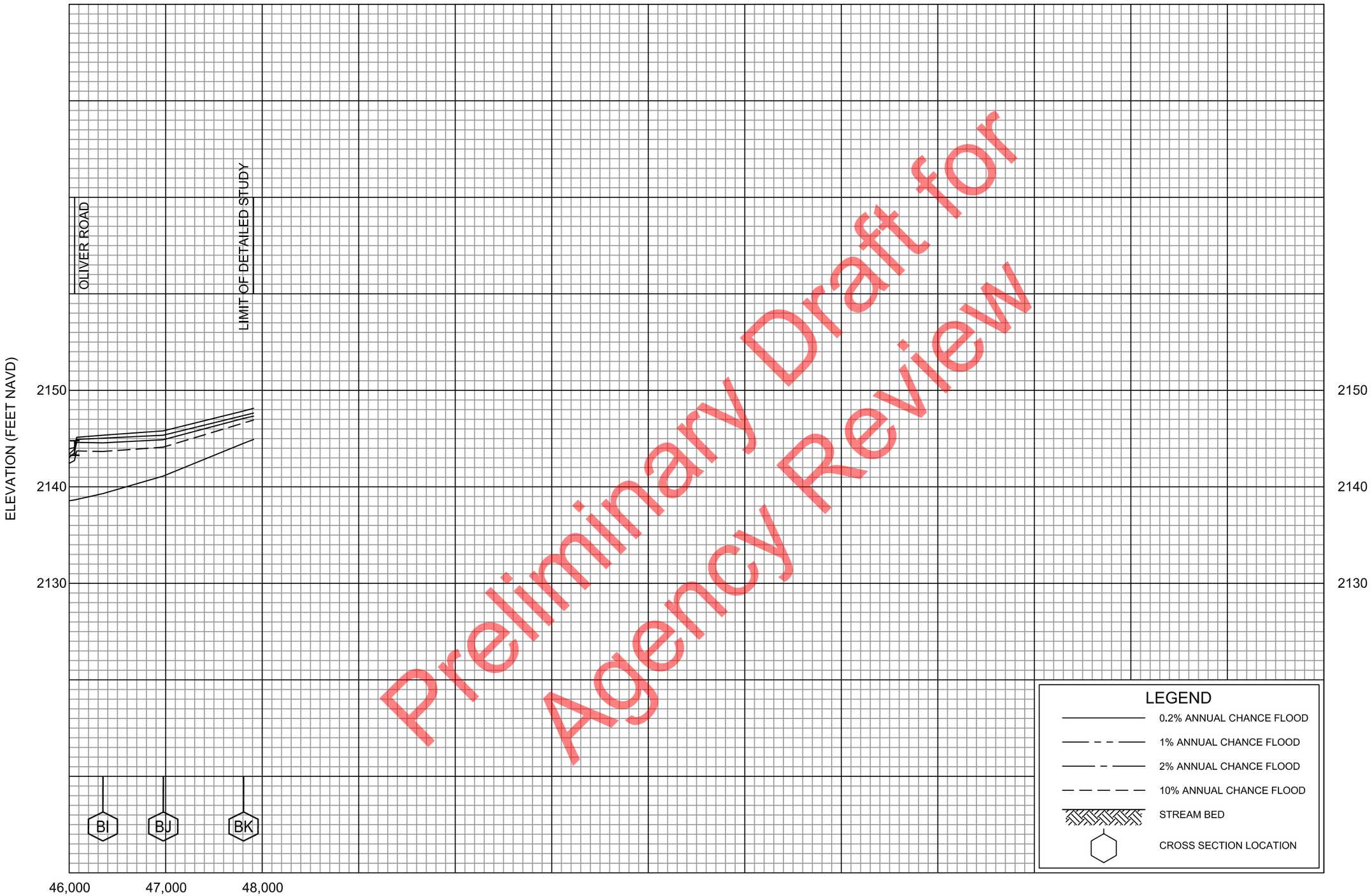

Preliminary Draft for Agency Review

FLOOD PROFILES

SAND CREEK

FEDERAL EMERGENCY MANAGEMENT AGENCY

BONNER COUNTY, ID

AND INCORPORATED AREAS

Preliminary Draft for Agency Review

Attachment D: Hydraulic Cross-Section Map

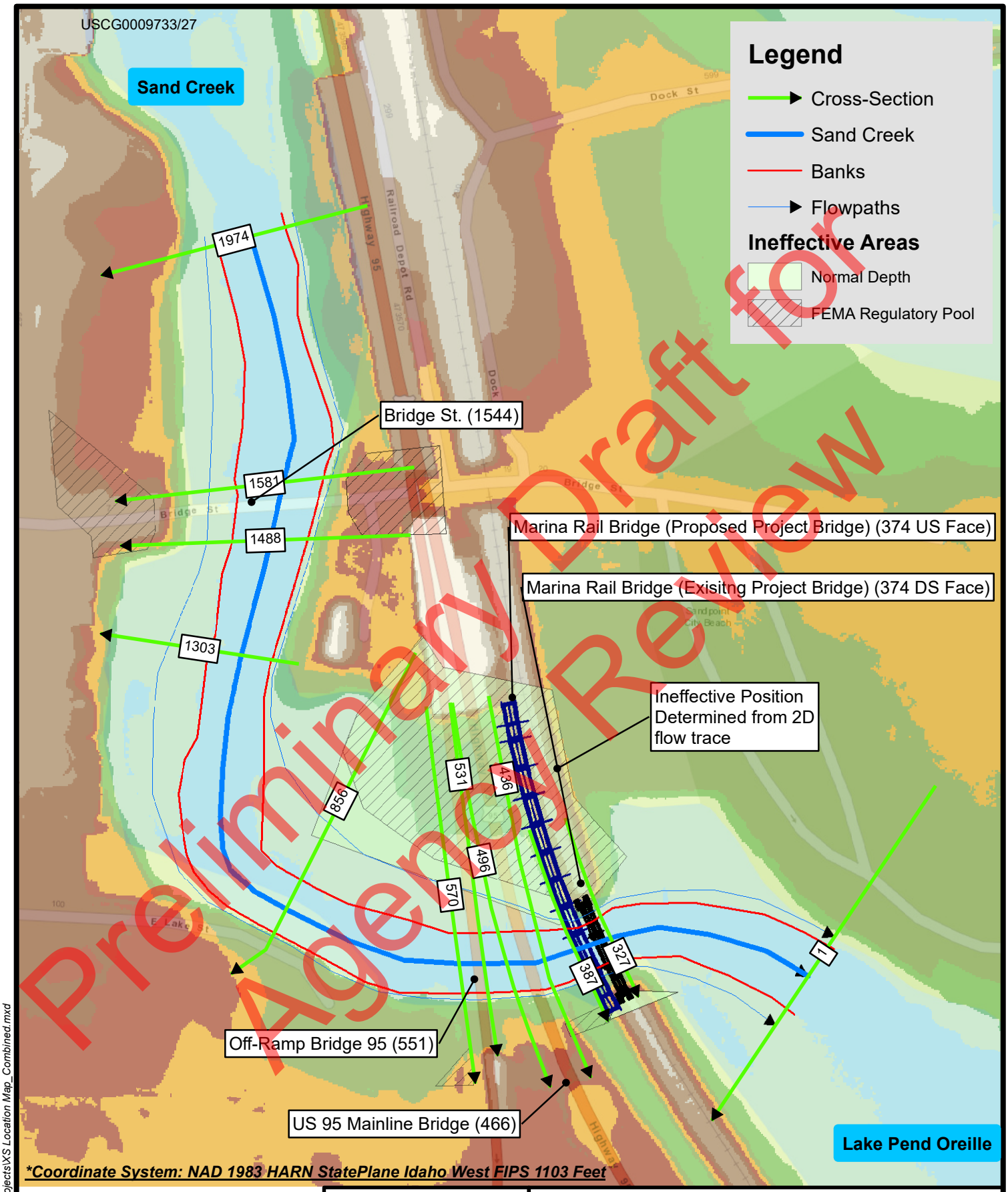

Coordinate System: NAD 1983 HARN StatePlane Idaho West FIPS 1103 Feet

0 100 200 Feet

1 in = 200 ft

N W E S

HANSON

Hanson Professional Services Inc.

Cross-Section Location Map

BNSF Railway Company
Bridge 3.1 Over Sand Creek
Sandpoint, Idaho

Job Number: 14R0057

I:\14jobs\14R0057\CAD\GIS\Projects\XS Location Map_Combined.mxd

Preliminary Draft for Agency Review

Attachment E: Existing Bridge Plans

USCG0009753/27

N.P.R.Y.
Idaho Div. Main Line.
3-50' D.P.G. Spans.
Bridge Numbr. 3.1
Sand Point.
Office of Chief Engr. April 4th 1902.

Approved:-
Chief Engineer

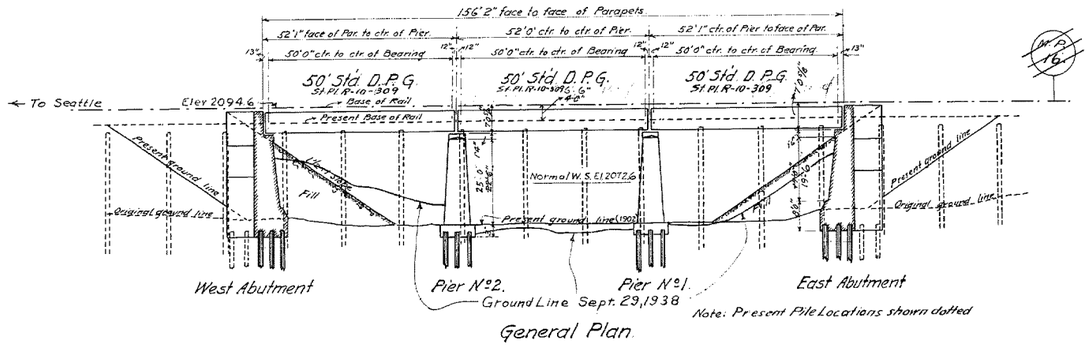

General Plan.

~~Scale: 1" = 20'~~

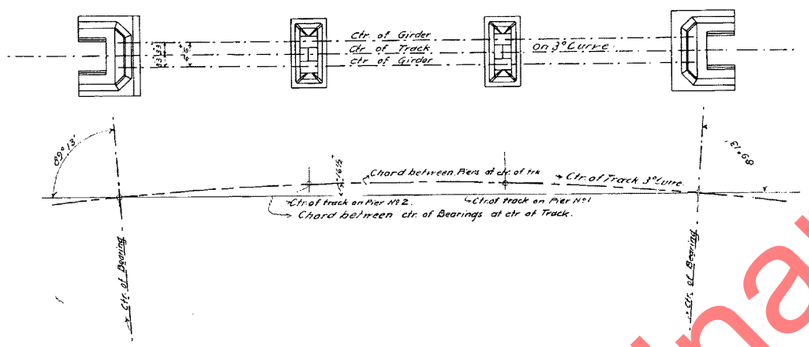

Concrete and Mortar

All Cement to be Best American Portland Cement.
All Sand to be clean, coarse and sharp.
Broken stone or quartz pebbles to be clean and not over 2½" in size
All proportions to be measured by volume.
Mixtures not so wet as to let water flush to top except by tamping.

Concrete "A" – In body of Piers and Abutments. One part cement, three parts sand and five parts broken stones or pebbles

Concrete "B" – In foundations and footing courses. Same mixture as above. Boulders (Nigger Heads) not to exceed one foot in size thrown in promiscuously and thoroughly imbedded by ramming.

Mortar "C" – In outside shell. One part cement and three parts sand.

Mortar "D" – In bearing blocks and parts of coping serving as bearing blocks and receiving direct pressure from superstructure. One part cement and ~~two~~ ½ parts sand.

Anchor Bolts.

1⅛" Anchor Bolts 1⅛" diam. - 1'4" long. To project Fixed end 3½" and Exp. End 5½" above masonry.

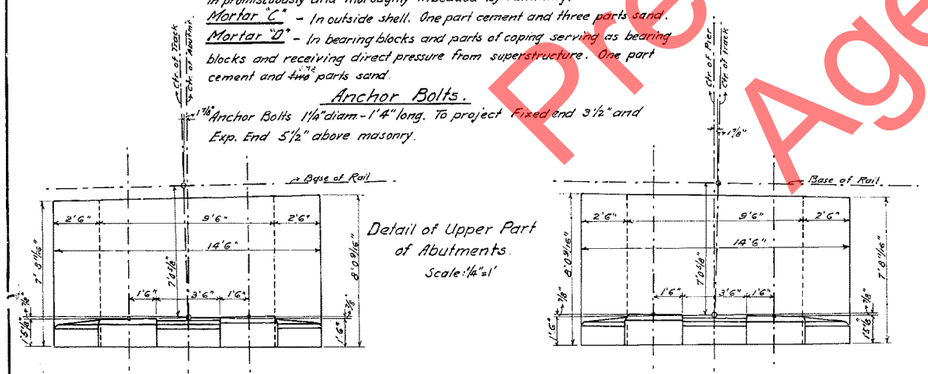

Detail of Upper Part of Abutments.
Scale: ¼" = 1'

West Abutment. Note: Balance of Abutments same as for Bridge No 13. East Abutment

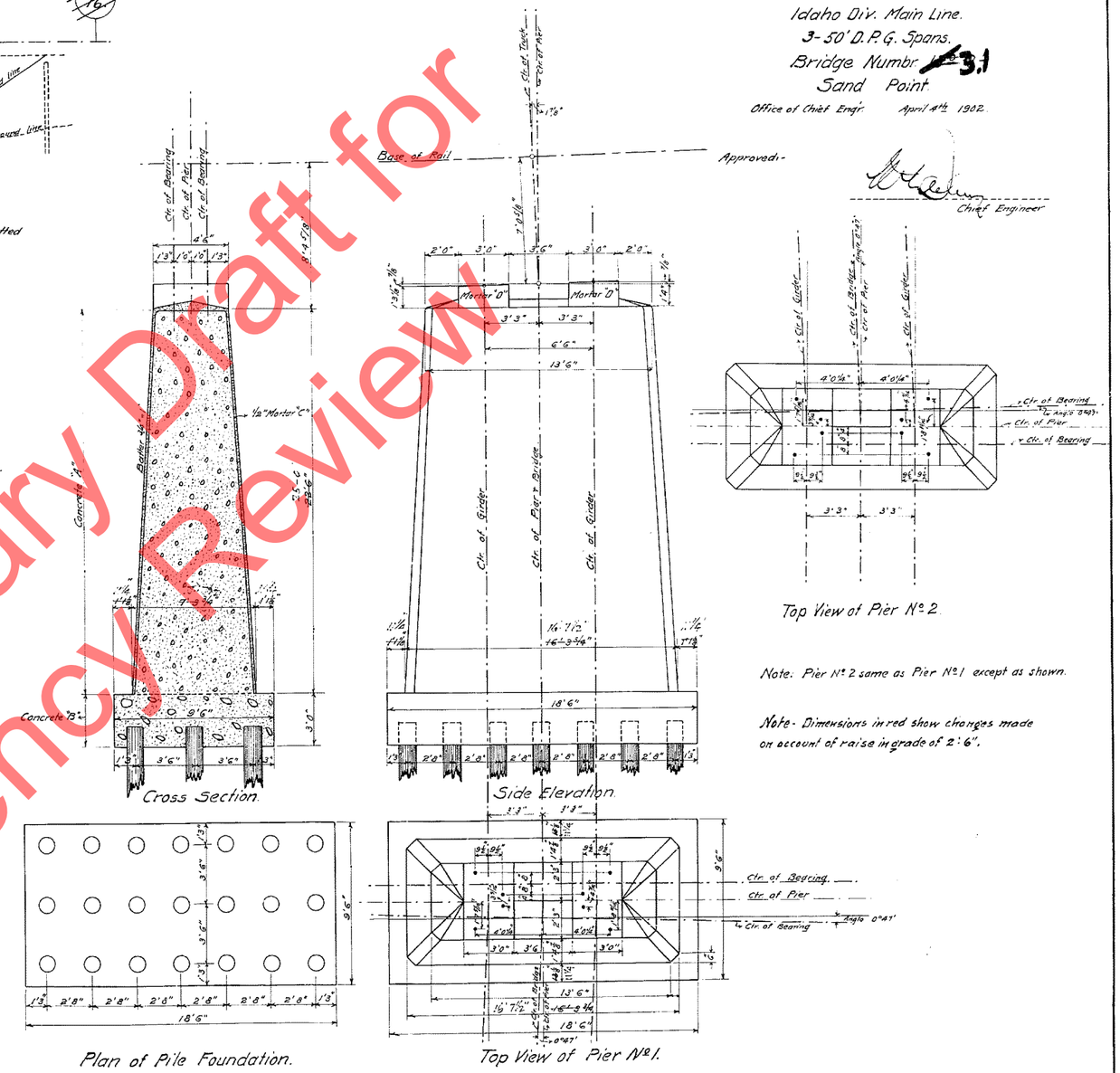

Note: Pier No 2 same as Pier No 1 except as shown.

Note - Dimensions in red show changes made on account of raise in grade of 2'6".

Details of Pier.

Scale: ¼" = 1'

BR. # 3.1

Preliminary Draft for Agency Review

USCG0009763/27

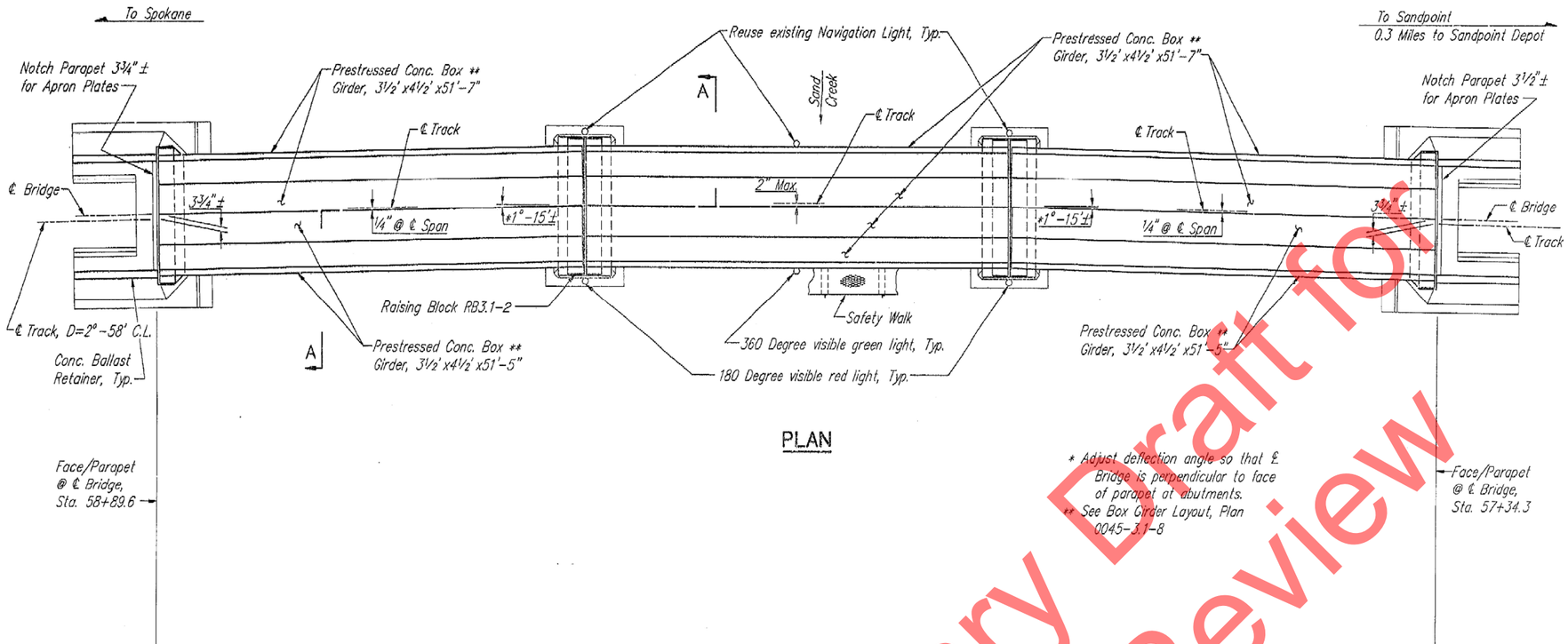

PLAN

* Adjust deflection angle so that ℄ Bridge is perpendicular to face of parapet at abutments.
** See Box Girder Layout, Plan 0045-3.1-8

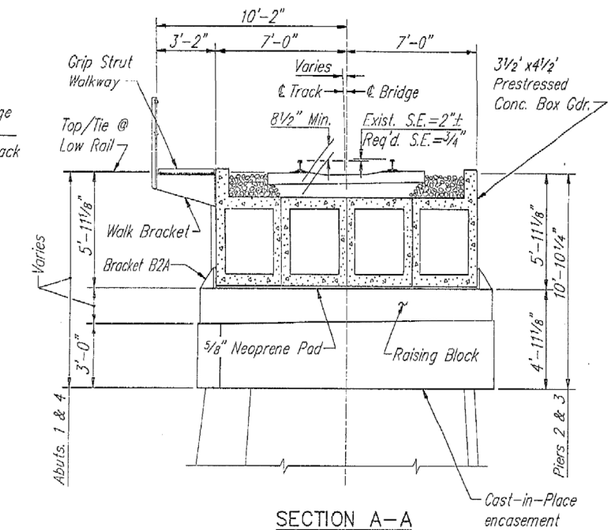

SECTION A-A

Scale: ¼"=1'-0"

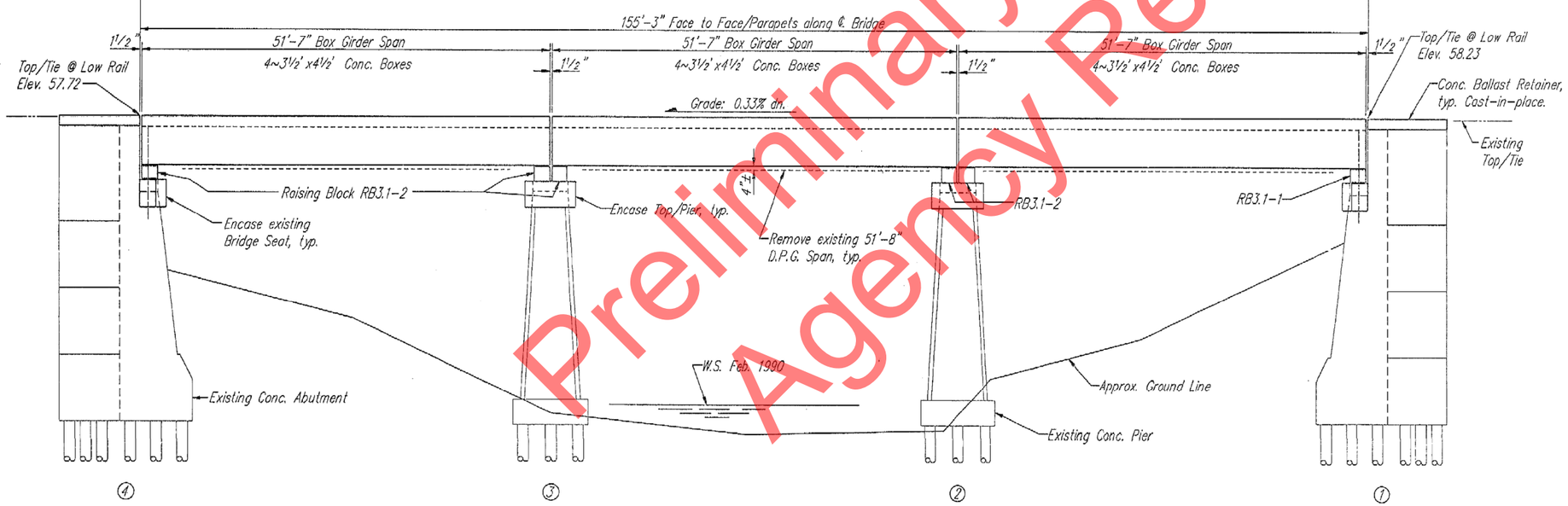

ELEVATION

Scale: ⅛"=1'-0"

GENERAL NOTES

Design Loading: Coopers E80 (Superstructure)

New construction shown in heavy lines. Existing structure to be retained shown in light solid lines. Portion of structure to be removed shown in light dashed lines.

Bridge stationing and elevations based on Survey Notes dated 11-28-89, Director Engineering Office, St. Paul, MN

Bench Mark: Paint mark near right end of Abutment 1 bridge seat. Assumed Elevation= 50.00

REFERENCES

Correspondence File ~ 110150-0045-3.1

Plan File ~ 0045-3.1

LIST OF DRAWINGS

PLAN NO.	TITLE
0045-3.1-1	General Plan ~ Replace Superstructure
0045-3.1-2	Raising Block Detail
0045-3.1-3	Pier Shaft & Abut. Modifications
0045-3.1-4	Ballast Retainer & Deck Details
0045-3.1-5	Field Erection Details
0045-3.1-6	Deck & Walk Details
0045-3.1-7	51'-7" Long Single P/S Box Girder
0045-3.1-8	51'-5" Long Single P/S Box Girder

R. G. CRABTREE LICENSED 5484 LAMBERT PROFESSIONAL ENGINEER

HARRINGTON & CORTELYOU, INC.
Consulting Engineers

DES. DRW DRW. TLW CHK. BTM

LINE SEGMENT 0045	BURLINGTON NORTHERN RAILROAD COMPANY
AUTHORITY	SANDPOINT TO SPOKANE
DATE July, 1990	BRIDGE 3.1 NEAR SANDPOINT, ID
ACCEPTED:	GENERAL PLAN ~ REPLACE SUPERSTRUCTURE
DIRECTOR ENGINEERING SERVICES	PLAN NO. 0045-3.1-1 SHEET 1 of 8

Preliminary Draft for Agency Review

Preliminary Draft for Agency Review

Attachment F: Proposed Bridge Plans

USCG0009783/27

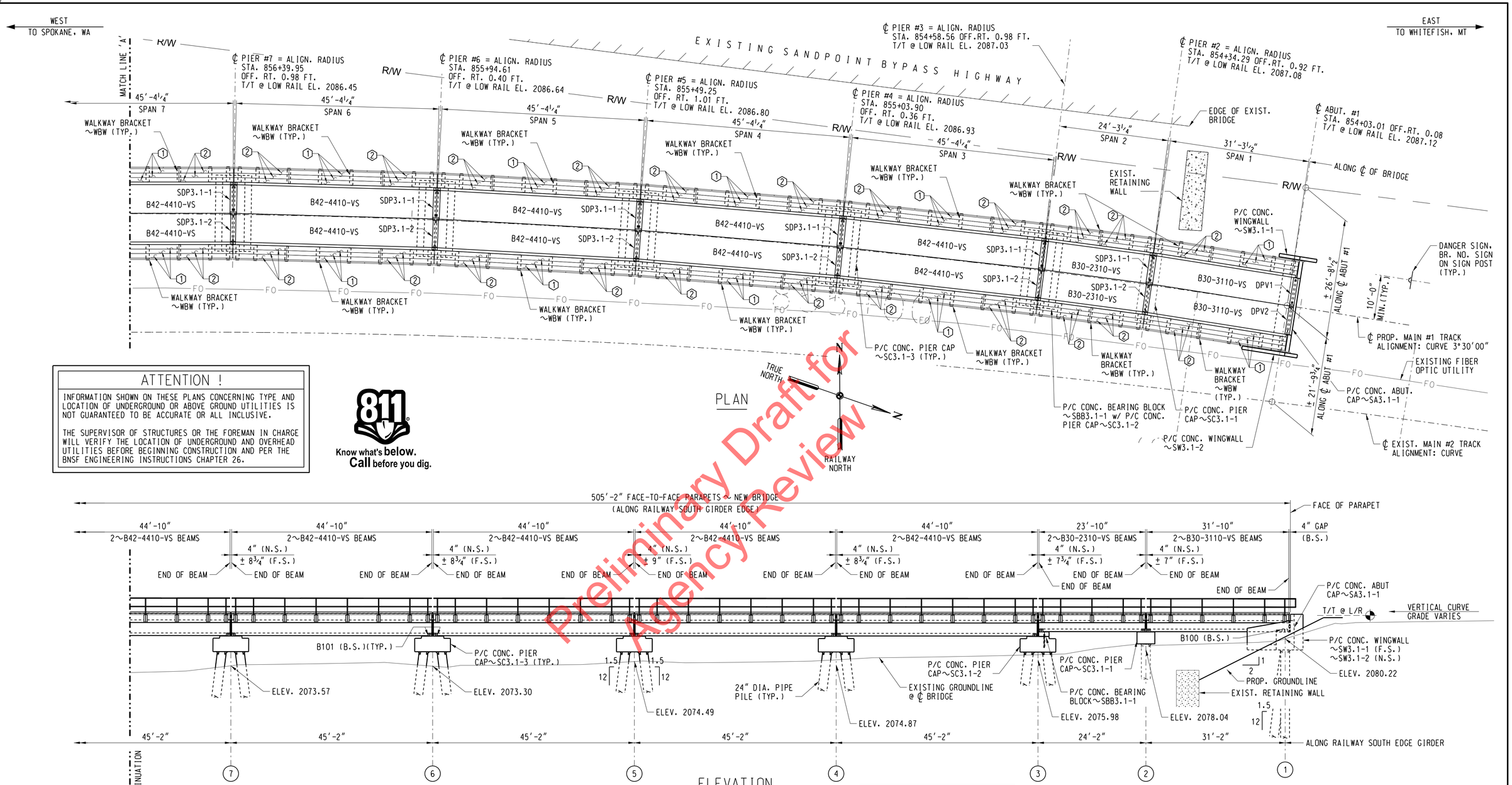

PLAN

Preliminary Draft for Agency Review

ATTENTION !

INFORMATION SHOWN ON THESE PLANS CONCERNING TYPE AND LOCATION OF UNDERGROUND OR ABOVE GROUND UTILITIES IS NOT GUARANTEED TO BE ACCURATE OR ALL INCLUSIVE.

THE SUPERVISOR OF STRUCTURES OR THE FOREMAN IN CHARGE WILL VERIFY THE LOCATION OF UNDERGROUND AND OVERHEAD UTILITIES BEFORE BEGINNING CONSTRUCTION AND PER THE BNSF ENGINEERING INSTRUCTIONS CHAPTER 26.

811 Know what's **below.** **Call** before you dig.

ELEVATION

(LOOKING RY NORTH)

MATCH LINE 'A'
SEE SHEET 2 FOR CONTINUATION

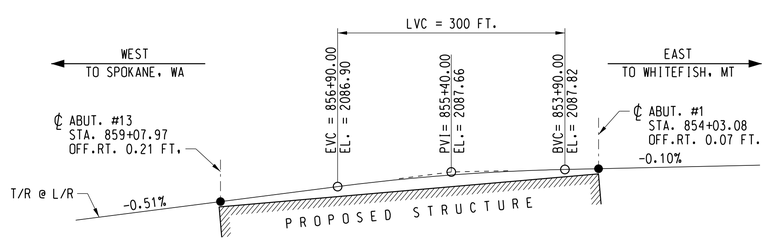

PROPOSED VERTICAL CURVE DIAGRAM

LIST OF TRACTION TREAD PANELS

MARK	LENGTH *
1	21'-0"
2	14'-0"
3	16'-0"

* CONTRACTOR SHALL CONFIRM PANEL LENGTHS WITH MANUFACTURER PRIOR TO CONSTRUCTION.

NOTES:

1. EXISTING GROUNDLINE ELEVATIONS ARE APPROXIMATE.
2. ALL TRACTION TREAD PANELS SHALL BE FIELD CUT TO MAINTAIN 2" GAP BETWEEN PANEL ENDS AT ℄ PIER CAP.
3. SEE PLAN NO. 0045-0003.100-033 THRU -038 FOR LOCATIONS AND DETAILS OF HANDRAIL PANELS.

90% SUBMITTAL
NOT FOR CONSTRUCTION
FEBRUARY 13, 2018

DES:	TJH
DRAWN:	GTJ
CHECK:	MAF
DATE:	FEB 2018
AUTH:	XXX-XXXX
LINE SEG:	0045

BNSF RAILWAY
BRIDGE ENGINEERING KANSAS CITY, KS
APPROVED:
ASST. DIRECTOR STRUCTURES DESIGN

SANDPOINT JCT. TO LAKESIDE JCT.
BRIDGE NUMBER 3.1
OVER SAND CREEK NEAR SANDPOINT, ID
GENERAL PLAN & ELEVATION (1 OF 2)

PLAN NO: 0045-0003.100-003 SHEET: 03 OF 38

HANSON
Hanson Professional Services Inc.

File Location: X:\Hdpsi\485057\CAD\Struct\Sheet\0003\0003.dgn
Date Printed: 9/6/2018 Time Printed: 3:41:27 PM

USCG0009793/27

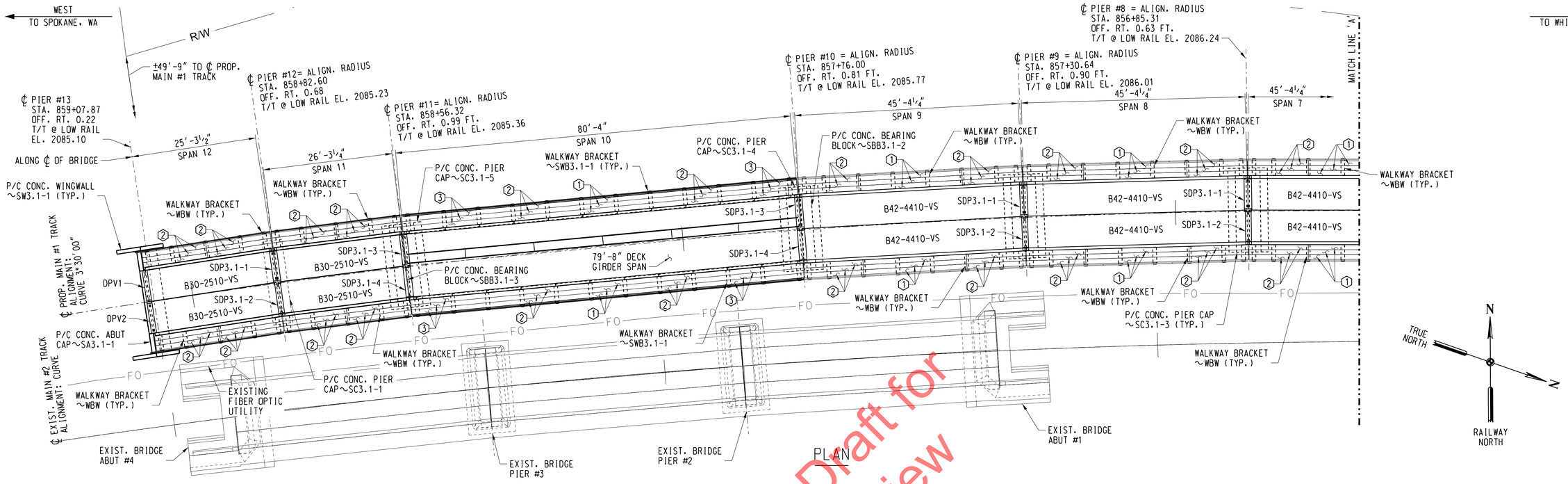

PLAN

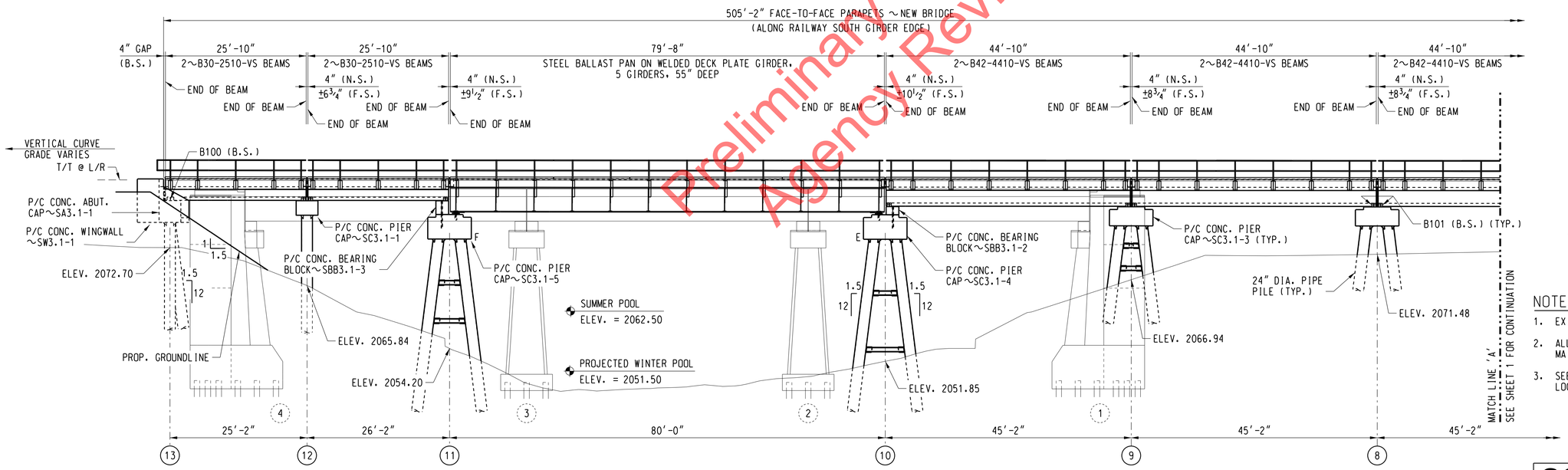

ELEVATION
(LOOKING RY NORTH)

LIST OF TRACTION TREAD PANELS

MARK	LENGTH *
1	21'-0"
2	14'-0"
3	16'-0"

* CONTRACTOR SHALL CONFIRM PANEL LENGTHS WITH MANUFACTURER PRIOR TO CONSTRUCTION.

NOTES:

1. EXISTING GROUNDLINE ELEVATIONS ARE APPROXIMATE.
2. ALL TRACTION TREAD PANELS SHALL BE FIELD CUT TO MAINTAIN 2" GAP BETWEEN PANEL ENDS AT ℄ PIER CAP.
3. SEE PLAN NO. 0045-0003.100-033 THRU -038 FOR LOCATIONS AND DETAILS OF HANDRAIL PANELS.

90% SUBMITTAL
NOT FOR CONSTRUCTION
FEBRUARY 13, 2018

Preliminary Draft for Agency Review

ATTENTION !

INFORMATION SHOWN ON THESE PLANS CONCERNING TYPE AND LOCATION OF UNDERGROUND OR ABOVE GROUND UTILITIES IS NOT GUARANTEED TO BE ACCURATE OR ALL INCLUSIVE.

THE SUPERVISOR OF STRUCTURES OR THE FOREMAN IN CHARGE WILL VERIFY THE LOCATION OF UNDERGROUND AND OVERHEAD UTILITIES BEFORE BEGINNING CONSTRUCTION AND PER THE BNSF ENGINEERING INSTRUCTIONS CHAPTER 26.

811 Know what's below. Call before you dig.

HANSON
Hanson Professional Services Inc.

DES:	TJH
DRAWN:	GTJ
CHECK:	MAF
DATE:	FEB 2018
AUTH:	XXX-XXXX
LINE SEG:	0045

BNSF RAILWAY
BRIDGE ENGINEERING KANSAS CITY, KS
APPROVED:
ASST. DIRECTOR STRUCTURES DESIGN

SANDPOINT JCT. TO LAKESIDE JCT.
BRIDGE NUMBER 3.1
OVER SAND CREEK NEAR SANDPOINT, ID
GENERAL PLAN & ELEVATION (2 OF 2)

PLAN NO: 0045-0003.100-004 SHEET: 04 OF 38

File Location: H:\dgns\48505TCAD\Struct\Sheet\0003\0004.dgn
Date Printed: 9/6/2018 Time Printed: 3:41:29 PM

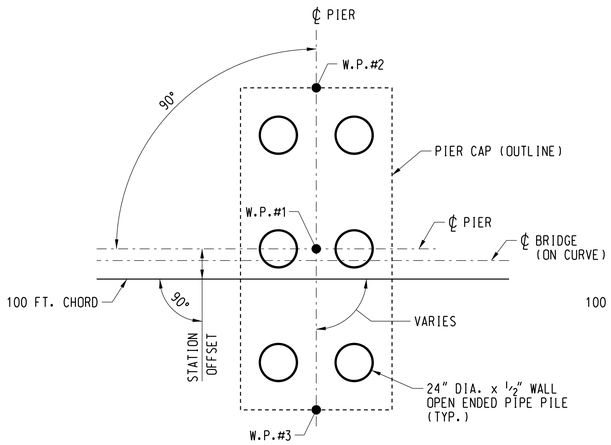

DOUBLE BENT

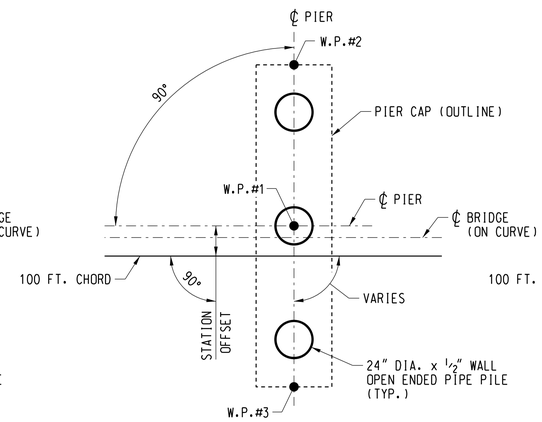

SINGLE BENT

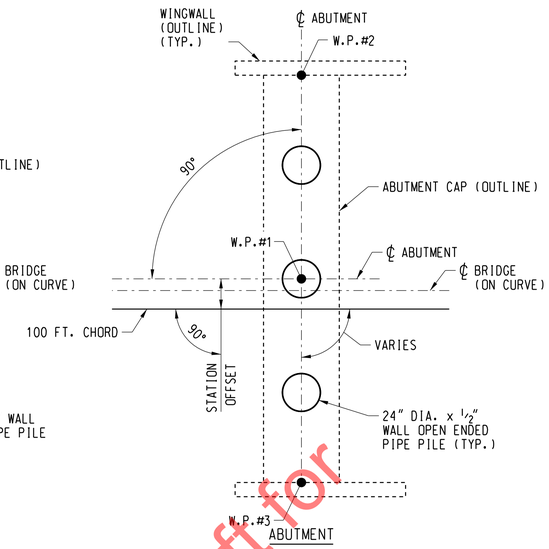

ABUTMENT

TYPICAL PILE LAYOUT DIAGRAMS - PIERS & ABUTMENTS

PILE NOTES:

1. PILES SHALL BE DRIVEN TO REFUSAL, IF POSSIBLE OR TO A MINIMUM ULTIMATE RESISTANCE OF 650 TONS FOR ALL PILES AT ABUTMENTS AND 390 TONS FOR ALL PILES AT PIERS, AS DETERMINED BY THE MODIFIED ENGINEERING NEWS RECORD FORMULA AS PER THE BNSF ENGINEERING INSTRUCTIONS 17.2.6.
2. ESTIMATED PILE LENGTH BELOW CUTOFF = VARIES. TO BE VERIFIED ACCORDINGLY BY ONSITE GEOTECHNICAL ENGINEER AND PILE DRIVING EQUIPMENT APPROVED BY THE ENGINEER.
3. PILE SPACINGS SHOWN ARE AT PILE CUTOFF ELEVATIONS.
4. SYMBOL ←X:12 DENOTES DIRECTION AND AMOUNT OF PILE BATTER.
5. USE TEMPLATE TO ENSURE PILE LOCATION DURING DRIVING IS REQUIRED.
6. TO ESTIMATE THE AMOUNT OF TIME NEEDED AFTER DRIVING UNTIL THE PILES CAN BE LOADED, A DYNAMIC MEASUREMENT AND ANALYSIS SHALL BE DONE ON (1) ONE TEST PILE AT EACH PIER AND ABUTMENT.
7. DYNAMIC MEASUREMENTS USING A PILE DRIVING ANALYZER (PDA) SHALL BE TAKEN WITH CAPWAP ANALYSES AND SHALL BE COMPLETED ON A MINIMUM OF (1) ONE PRODUCTION PILE AT EACH PIER AND ABUTMENT, (13) THIRTEEN TOTAL (MINIMUM).
8. AN EPOXY PROTECTIVE COATING, SHALL BE APPLIED TO THE PILE SURFACE FROM PILE CUTOFF TO GROUNDLINE TO REDUCE CORROSION. PROTECTIVE COATING SHALL BE APPLIED AFTER ALL WELDING HAS BEEN COMPLETED.

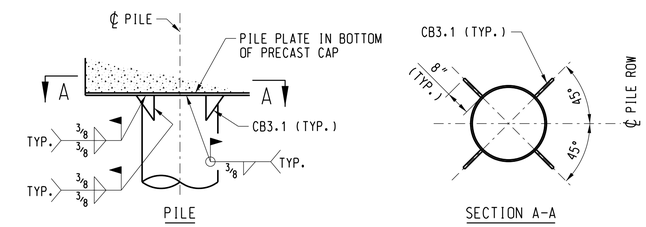

PILE-TO-PIER DETAILS

AFTER PRECAST CAP IS SET IN PROPER LOCATION, PLACE AND WELD 4~CB3.1'S PER PILE AS SHOWN, BURNING THE SIDE OF CB3.1 AS REQUIRED TO FIT BATTERED PILES. PAINT CB3.1'S & PILE PLATES AFTER WELDING.

TABLE OF ELEVATION - BRIDGE 3.1

LOCATION	T/T @ LOW RAIL ELEVATION	BRIDGE SEAT ELEVATION	PILE CUTOFF ELEVATION	ESTIMATED TIP ELEVATION	EXTENDED PILE LENGTH (FT)	T/T TO PILE CUTOFF	W.P.#1		W.P.#2		W.P.#3	
							NORTHING	EASTING	NORTHING	EASTING	NORTHING	EASTING
ABUT. 1	2087.12	2083.29	2079.29	1929.29	150	7'-10"						
PIER 2	2087.08	2083.23	2080.56	1957.56	123	6'-6 1/4"						
PIER 3	2087.03	2082.16/2083.18	2078.66	1955.66	123	8'-4 1/2"						
PIER 4	2086.93	2082.02	2078.52	1954.52	124	8'-4 7/8"						
PIER 5	2086.80	2081.89	2078.39	1954.39	124	8'-4 5/8"						
PIER 6	2086.64	2081.75	2078.25	1953.25	125	8'-5 5/8"						
PIER 7	2086.45	2081.53	2078.03	1953.03	125	8'-5"						
PIER 8	2086.24	2081.31	2077.80	1950.81	127	8'-5 1/8"						
PIER 9	2086.01	2081.10	2077.60	1946.60	131	8'-4 7/8"						
PIER 10	2085.77	2079.38/2080.88	2074.88	1931.88	143	10'-10 5/8"						
PIER 11	2085.36	2081.51/2078.99	2074.49	1933.49	141	10'-10 1/2"						
PIER 12	2085.23	2081.39	2078.72	1945.72	133	6'-6 1/8"						
ABUT. 13	2085.10	2081.27	2077.27	1927.27	150	7'-10"						

POINTS TO BE ADDED TO 100% SUBMITTAL

Preliminary Draft for Agency Review

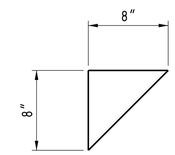

CONNECTION BAR CB3.1

1 BAR 8" x 3/4" x 0'-8"
WEIGHT = 6.8 LBS.
264 REQUIRED

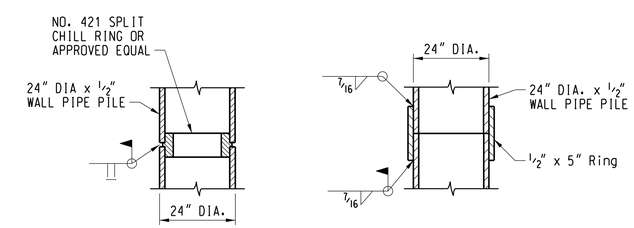

ALTERNATE PIPE PILE SPLICE DETAILS

90% SUBMITTAL
NOT FOR CONSTRUCTION
FEBRUARY 13, 2018

HANSON
Hanson Professional Services Inc.

DES:	TJH
DRAWN:	GTJ
CHECK:	MAF
DATE:	FEB 2018
AUTH:	XXX-XXXX
LINE SEG:	0045

BNSF RAILWAY
BRIDGE ENGINEERING KANSAS CITY, KS
APPROVED:
ASST. DIRECTOR STRUCTURES DESIGN

SANDPOINT JCT. TO LAKESIDE JCT.
BRIDGE NUMBER 3.1
OVER SAND CREEK NEAR SANDPOINT, ID
PILE DETAILS AND TABLE OF ELEVATION

PLAN NO: 0045-0003.100-009 SHEET: 09 OF 38

Preliminary Draft for Agency Review

Attachment G: HEC-RAS Output

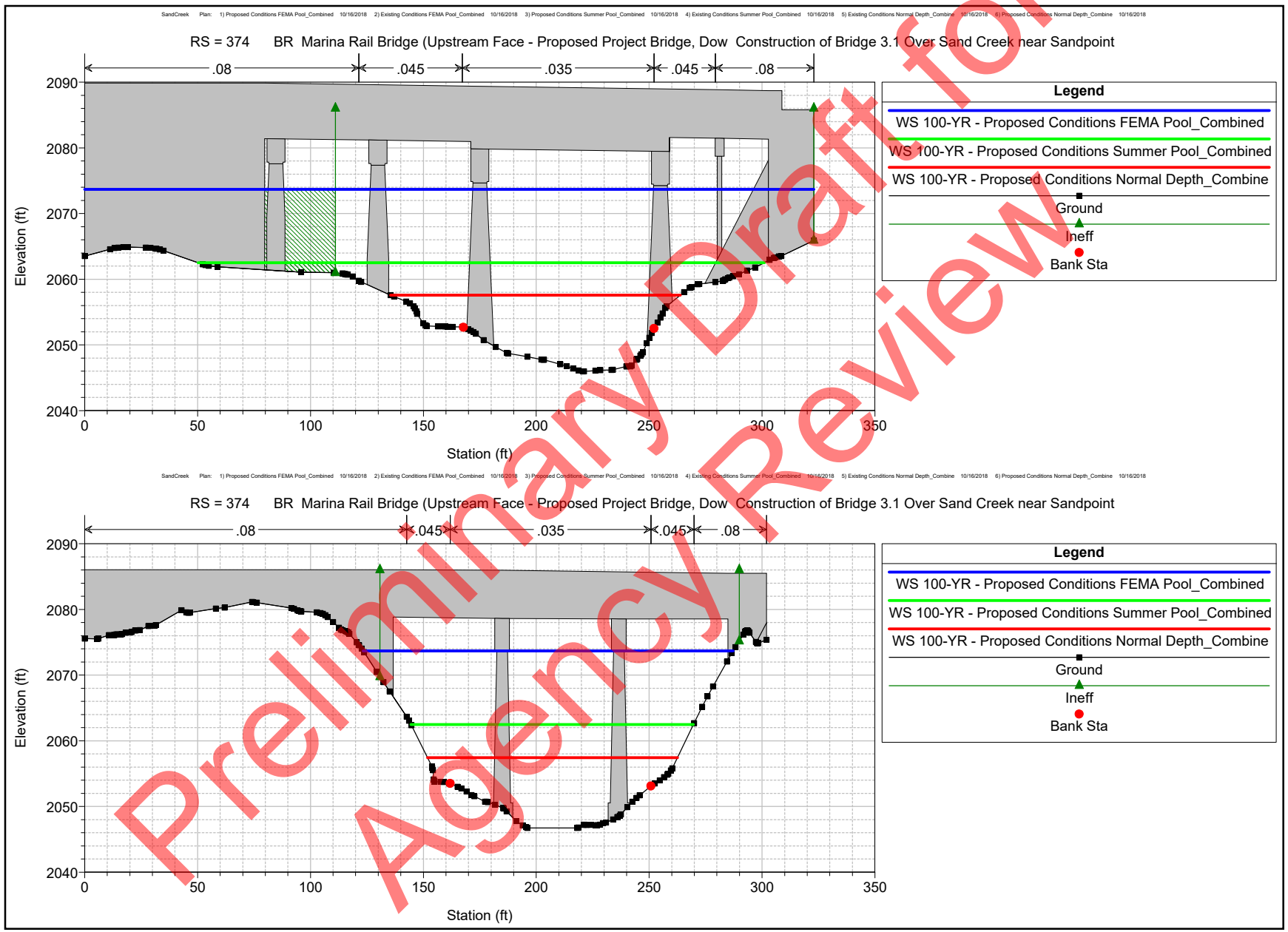

Preliminary Draft for Agency Review

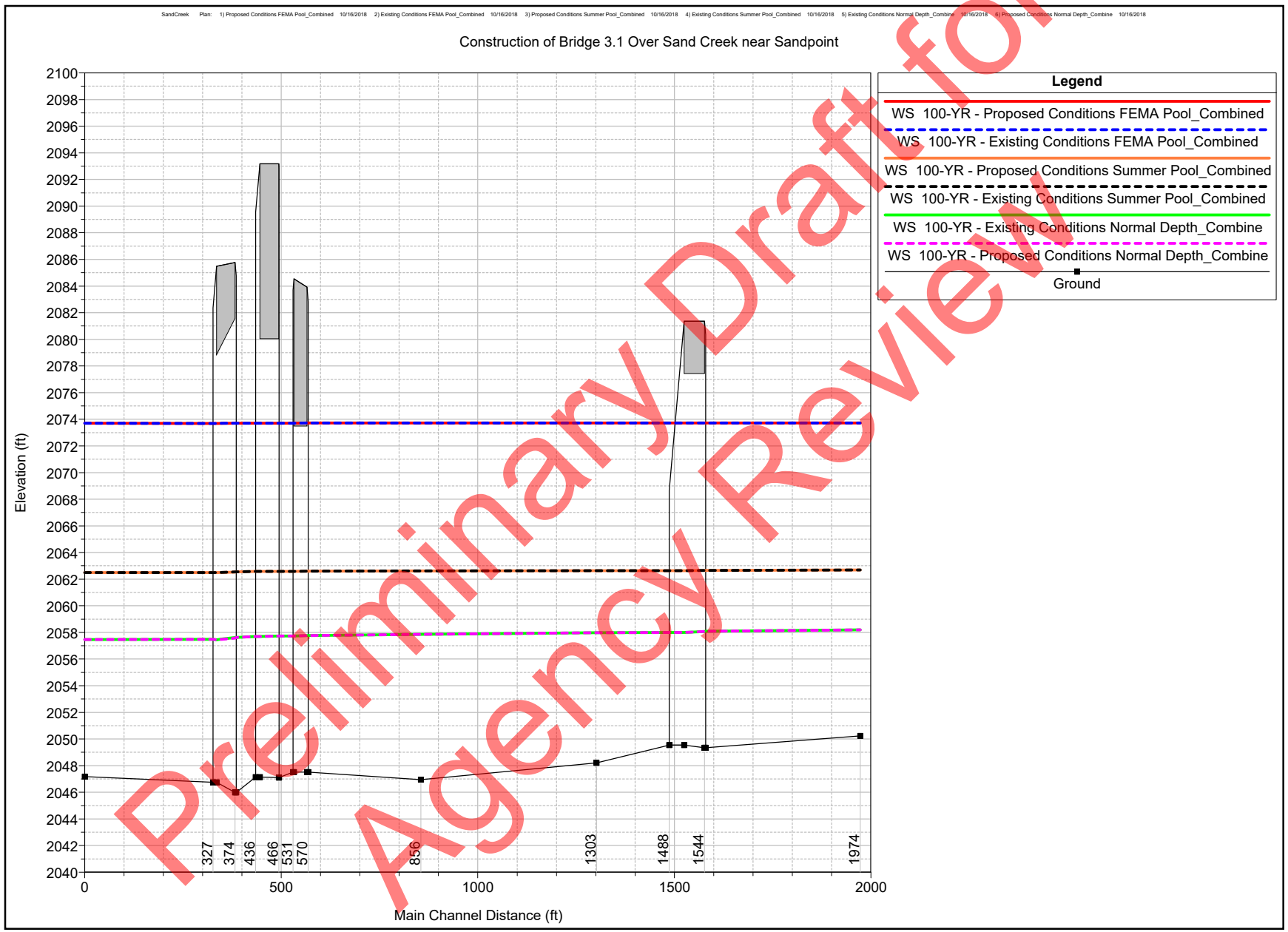

Preliminary Draft for Agency Review

Cross section 3 should be located a short distance upstream from the bridge or culvert. This distance should only reflect the length required for the abrupt acceleration and contraction of the flow that occurs in the immediate area of the opening. Cross section 3 represents the natural ground of the channel and overbank area just upstream of the road embankment. This section is normally located near the toe of the upstream road embankment. This cross section should **Not** be placed immediately upstream of the bridge deck or culvert opening (for example some people wrongly place this cross section 1.0 foot upstream of the bridge deck or culvert opening). The bridge and culvert routines used between cross sections 2 and 3 account for the contraction losses that occur just upstream of the structure (entrance losses for the culvert routines). Therefore, this cross section should be place just upstream of the area where the abrupt contraction of flow occurs to get into the bridge opening or culvert. This distance will vary with the size of the bridge opening or culvert.

Parallel Bridges

With the construction of divided highways, a common modeling problem involves parallel bridges (Figure 5-12). For new highways, these bridges are often identical structures. The hydraulic loss through the two structures has been shown to be between one and two times the loss for one bridge [Bradley, 1978]. The model results [Bradley, 1978] indicate the loss for two bridges ranging from 1.3 to 1.55 times the loss for one bridge crossing, over the range of bridge spacing's tested. Presumably if the two bridges were far enough apart, the losses for the two bridges would equal twice the loss for one. If the parallel bridges are very close to each other, and the flow will not be able to expand between the bridges, the bridges can be modeled as a single bridge. If there is enough distance between the bridge, in which the flow has room to expand and contract, the bridges should be modeled as two separate bridges. If both bridges are modeled, care should be exercised in depicting the expansion and contraction of flow between the bridges. Expansion and contraction rates should be based on the same procedures as single bridges.

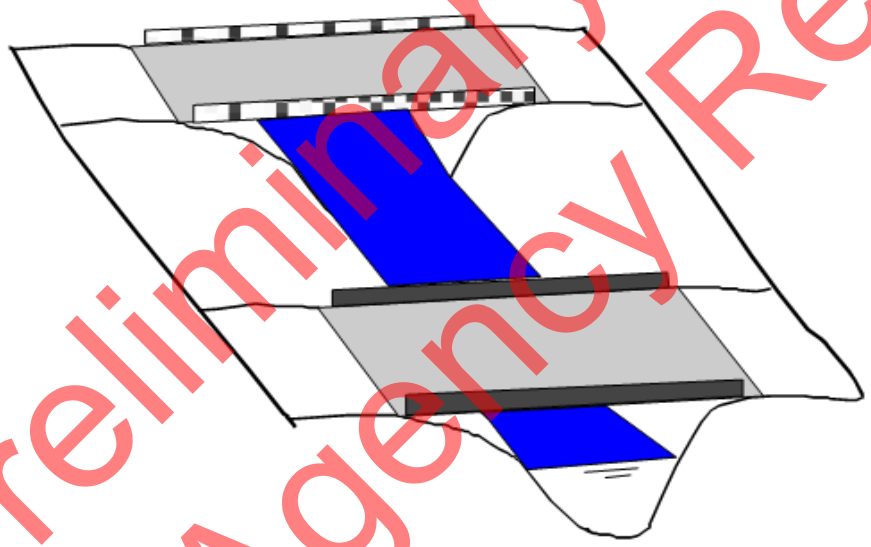

Figure 5-12 Parallel Bridge Example

Preliminary Draft for Agency Review

Construction of Bridge 3.1 Over Sand Creek near Sandpoint, ID - 10% Annual Chance Comparison (Existing Conditions - Normal Depth)

River Sta	Profile	Q Total (cfs)	Min Ch El (ft)	W.S. Elev (ft)	Crit W.S. (ft)	E.G. Elev (ft)	E.G. Slope (ft/ft)	Vel Chnl (ft/s)	Flow Area (sq ft)	Top Width (ft)	Froude # Chl
1974	10-YR	1455	2050.23	2055.99	0	2056.07	0.000357	2.25	667.65	169.86	0.18
1581	10-YR	1455	2049.34	2055.876	2052.3	2055.93	0.000301	1.77	832.61	211.39	0.15
1544	10-YR	Bridge Street									
1488	10-YR	1455	2049.54	2055.792	2052.53	2055.86	0.000405	2.08	724.24	193.2	0.18
1303	10-YR	1455	2048.2	2055.754	0	2055.79	0.000225	1.62	1034.88	242.33	0.12
856	10-YR	1455	2046.95	2055.654	2050.66	2055.7	0.000158	1.77	870.54	390.43	0.13
570	10-YR	1455	2047.51	2055.573	2051.62	2055.64	0.000275	2.1	744.05	360.64	0.16
551	10-YR	Bypass 95 Off-Ramp									
531	10-YR	1455	2047.51	2055.556	2051.62	2055.63	0.000292	2.16	705.36	360.34	0.17
496	10-YR	1455	2047.11	2055.548	2051.19	2055.62	0.000255	2.14	729	262.85	0.16
466	10-YR	US 95 Mainline Bridge									
436	10-YR	1455	2047.15	2055.522	2051.19	2055.59	0.000295	2.19	706.97	262.54	0.16
387	10-YR	1455	2045.98	2055.502	2049.79	2055.58	0.000207	2.27	679.66	110.67	0.15
337	10-YR	Project Bridge: Bridge 3.1 (Existing)									
327	10-YR	1455	2046.75	2055.418	2050.27	2055.52	0.0003	2.51	595.93	105.22	0.17
1	10-YR	1455	2047.18	2055.37	2051.51	2055.41	0.0002	1.53	971.05	250.32	0.13

Preliminary Draft for Agency Review

Construction of Bridge 3.1 Over Sand Creek near Sandpoint, ID - 10% Annual Chance Comparison (Existing Conditions - Summer Pool)

River Sta	Profile	Q Total (cfs)	Min Ch El (ft)	W.S. Elev (ft)	Crit W.S. (ft)	E.G. Elev (ft)	E.G. Slope (ft/ft)	Vel Chnl (ft/s)	Flow Area (sq ft)	Top Width (ft)	Froude # Chl
1974	10-YR	1455	2050.23	2062.548	0	2062.56	0.000025	0.83	1932.45	214.98	0.04
1581	10-YR	1455	2049.34	2062.542	2052.3	2062.55	0.000016	0.65	2339.94	238.36	0.03
1544	10-YR	Bridge Street									
1488	10-YR	1455	2049.54	2062.536	2052.53	2062.54	0.00002	0.73	2100.41	215.54	0.04
1303	10-YR	1455	2048.2	2062.535	0	2062.54	0.000011	0.59	2772.66	269.04	0.03
856	10-YR	1455	2046.95	2062.531	2050.66	2062.54	0.00001	0.58	2974.55	405.69	0.03
570	10-YR	1455	2047.51	2062.524	2051.62	2062.53	0.000015	0.68	2307	447.1	0.03
551	10-YR	Bypass 95 Off-Ramp									
531	10-YR	1455	2047.51	2062.522	2051.62	2062.53	0.000017	0.72	2171.29	437.75	0.04
496	10-YR	1455	2047.11	2062.522	2051.19	2062.53	0.000016	0.71	2194.11	294.76	0.04
466	10-YR	US 95 Mainline Bridge									
436	10-YR	1455	2047.15	2062.52	2051.19	2062.53	0.000018	0.73	2161.4	292.76	0.04
387	10-YR	1455	2045.98	2062.511	2049.79	2062.53	0.000026	0.99	1670.75	250.65	0.05
337	10-YR	Project Bridge: Bridge 3.1 (Existing)									
327	10-YR	1455	2046.75	2062.498	2050.27	2062.52	0.000036	1.11	1410.23	125.07	0.05
1	10-YR	1455	2047.18	2062.5	2051.53	2062.5	0.000009	0.52	2996.85	315.99	0.03

Preliminary Draft for Agency Review

Construction of Bridge 3.1 Over Sand Creek near Sandpoint, ID - 10% Annual Chance Comparison (Existing Conditions - FEMA Pool)

River Sta	Profile	Q Total (cfs)	Min Ch El (ft)	W.S. Elev (ft)	Crit W.S. (ft)	E.G. Elev (ft)	E.G. Slope (ft/ft)	Vel Chnl (ft/s)	Flow Area (sq ft)	Top Width (ft)	Froude # Chl
1974	10-YR	1455	2050.23	2073.706	0	2073.71	0.000002	0.36	4685.98	270.15	0.01
1581	10-YR	1455	2049.34	2073.706	2052.3	2073.71	0.000001	0.3	5164.12	268.61	0.01
1544	10-YR	Bridge Street									
1488	10-YR	1455	2049.54	2073.705	2052.53	2073.71	0.000002	0.34	4788.55	290.42	0.01
1303	10-YR	1455	2048.2	2073.705	0	2073.71	0.000001	0.27	6067.52	331.54	0.01
856	10-YR	1455	2046.95	2073.705	2050.66	2073.71	0.000001	0.27	6335.8	527.86	0.01
570	10-YR	1455	2047.51	2073.704	2051.62	2073.71	0.000001	0.31	5170.9	587.94	0.01
551	10-YR	Bypass 95 Off-Ramp									
531	10-YR	1455	2047.51	2073.703	2051.62	2073.71	0.000002	0.33	4903.03	521.61	0.01
496	10-YR	1455	2047.11	2073.703	2051.19	2073.71	0.000002	0.34	4679.85	498.63	0.01
466	10-YR	US 95 Mainline Bridge									
436	10-YR	1455	2047.15	2073.703	2051.19	2073.71	0.000002	0.35	4475.24	501.63	0.01
387	10-YR	1455	2045.98	2073.701	2049.79	2073.7	0.000003	0.46	3520.56	322.96	0.02
337	10-YR	Project Bridge: Bridge 3.1 (Existing)									
327	10-YR	1455	2046.75	2073.699	2050.27	2073.7	0.000004	0.54	3009.86	163.91	0.02
1	10-YR	1455	2047.18	2073.7	2051.53	2073.7	0.000001	0.23	6857.8	609.21	0.01

Preliminary Draft for Agency Review

Construction of Bridge 3.1 Over Sand Creek near Sandpoint, ID - 10% Annual Chance Comparison (Proposed Conditions - Normal Depth)

River Sta	Profile	Q Total (cfs)	Min Ch El (ft)	W.S. Elev (ft)	Crit W.S. (ft)	E.G. Elev (ft)	E.G. Slope (ft/ft)	Vel Chnl (ft/s)	Flow Area (sq ft)	Top Width (ft)	Froude # Chl
1974	10-YR	1455	2050.23	2055.99	0	2056.07	0.000357	2.25	667.57	169.87	0.18
1581	10-YR	1455	2049.34	2055.876	2052.3	2055.93	0.000301	1.77	832.56	211.39	0.15
1544	10-YR	Bridge Street									
1488	10-YR	1455	2049.54	2055.792	2052.53	2055.86	0.000405	2.08	724.19	193.2	0.18
1303	10-YR	1455	2048.2	2055.753	0	2055.79	0.000225	1.62	1034.83	242.32	0.12
856	10-YR	1455	2046.95	2055.654	2050.66	2055.7	0.000158	1.77	870.5	390.43	0.13
570	10-YR	1455	2047.51	2055.573	2051.62	2055.64	0.000275	2.1	744.01	360.63	0.16
551	10-YR	Bypass 95 Off-Ramp									
531	10-YR	1455	2047.51	2055.556	2051.62	2055.63	0.000292	2.16	705.33	360.33	0.17
496	10-YR	1455	2047.11	2055.547	2051.19	2055.62	0.000255	2.14	728.96	262.85	0.16
466	10-YR	US 95 Mainline Bridge									
436	10-YR	1455	2047.15	2055.522	2051.19	2055.59	0.000295	2.19	706.93	262.54	0.16
387	10-YR	1455	2045.98	2055.502	2049.79	2055.58	0.000207	2.27	679.64	110.67	0.15
374	10-YR	Upstream Bridge Face - Project Bridge: Bridge 3.1 (Proposed)									
374	10-YR	Downstream Bridge Face - Project Bridge: Bridge 3.1 (Existing)									
327	10-YR	1455	2046.75	2055.418	2050.27	2055.52	0.0003	2.51	595.93	105.22	0.17
1	10-YR	1455	2047.18	2055.37	2051.51	2055.41	0.0002	1.53	971.08	250.35	0.13

Preliminary Draft for Agency Review

Construction of Bridge 3.1 Over Sand Creek near Sandpoint, ID - 10% Annual Chance Comparison (Proposed Conditions - Summer Pool)

River Sta	Profile	Q Total (cfs)	Min Ch El (ft)	W.S. Elev (ft)	Crit W.S. (ft)	E.G. Elev (ft)	E.G. Slope (ft/ft)	Vel Chnl (ft/s)	Flow Area (sq ft)	Top Width (ft)	Froude # Chl
1974	10-YR	1455	2050.23	2062.549	0	2062.56	0.000025	0.83	1932.66	214.99	0.04
1581	10-YR	1455	2049.34	2062.543	2052.3	2062.55	0.000016	0.65	2340.12	238.36	0.03
1544	10-YR	Bridge Street									
1488	10-YR	1455	2049.54	2062.536	2052.53	2062.54	0.00002	0.73	2100.56	215.54	0.04
1303	10-YR	1455	2048.2	2062.536	0	2062.54	0.000011	0.59	2772.86	269.04	0.03
856	10-YR	1455	2046.95	2062.531	2050.66	2062.54	0.00001	0.58	2974.75	405.69	0.03
570	10-YR	1455	2047.51	2062.525	2051.62	2062.53	0.000015	0.68	2307.16	447.11	0.03
551	10-YR	Bypass 95 Off-Ramp									
531	10-YR	1455	2047.51	2062.523	2051.62	2062.53	0.000017	0.72	2171.44	437.75	0.04
496	10-YR	1455	2047.11	2062.523	2051.19	2062.53	0.000016	0.71	2194.26	294.76	0.04
466	10-YR	US 95 Mainline Bridge									
436	10-YR	1455	2047.15	2062.521	2051.19	2062.53	0.000018	0.73	2161.55	292.76	0.04
387	10-YR	1455	2045.98	2062.512	2049.79	2062.53	0.000026	0.99	1670.87	250.66	0.05
374	10-YR	Upstream Bridge Face - Project Bridge: Bridge 3.1 (Proposed)									
374	10-YR	Downstream Bridge Face - Project Bridge: Bridge 3.1 (Existing)									
327	10-YR	1455	2046.75	2062.498	2050.27	2062.52	0.000036	1.11	1410.23	125.07	0.05
1	10-YR	1455	2047.18	2062.5	2051.53	2062.5	0.000009	0.52	2996.94	315.99	0.03

Preliminary Draft for Agency Review

Construction of Bridge 3.1 Over Sand Creek near Sandpoint, ID - 10% Annual Chance Comparison (Proposed Conditions - FEMA Pool)

River Sta	Profile	Q Total (cfs)	Min Ch El (ft)	W.S. Elev (ft)	Crit W.S. (ft)	E.G. Elev (ft)	E.G. Slope (ft/ft)	Vel Chnl (ft/s)	Flow Area (sq ft)	Top Width (ft)	Froude # Chl
1974	10-YR	1455	2050.23	2073.706	0	2073.71	0.000002	0.36	4686.04	270.15	0.01
1581	10-YR	1455	2049.34	2073.706	2052.3	2073.71	0.000001	0.3	5164.12	268.61	0.01
1544	10-YR	Bridge Street									
1488	10-YR	1455	2049.54	2073.705	2052.53	2073.71	0.000002	0.34	4788.55	290.42	0.01
1303	10-YR	1455	2048.2	2073.705	0	2073.71	0.000001	0.27	6067.52	331.54	0.01
856	10-YR	1455	2046.95	2073.705	2050.66	2073.71	0.000001	0.27	6335.8	527.86	0.01
570	10-YR	1455	2047.51	2073.704	2051.62	2073.71	0.000001	0.31	5170.9	587.94	0.01
551	10-YR	Bypass 95 Off-Ramp									
531	10-YR	1455	2047.51	2073.703	2051.62	2073.71	0.000002	0.33	4903.03	521.61	0.01
496	10-YR	1455	2047.11	2073.703	2051.19	2073.71	0.000002	0.34	4679.85	498.63	0.01
466	10-YR	US 95 Mainline Bridge									
436	10-YR	1455	2047.15	2073.703	2051.19	2073.71	0.000002	0.35	4475.24	501.63	0.01
387	10-YR	1455	2045.98	2073.701	2049.79	2073.7	0.000003	0.46	3520.56	322.96	0.02
374	10-YR	Upstream Bridge Face - Project Bridge: Bridge 3.1 (Proposed)									
374	10-YR	Downstream Bridge Face - Project Bridge: Bridge 3.1 (Existing)									
327	10-YR	1455	2046.75	2073.699	2050.27	2073.7	0.000004	0.54	3009.86	163.91	0.02
1	10-YR	1455	2047.18	2073.7	2051.53	2073.7	0.000001	0.23	6857.89	609.21	0.01

Preliminary Draft for Agency Review

Construction of Bridge 3.1 Over Sand Creek near Sandpoint, ID - 10% Annual Chance Comparison

	Proposed Conditions (Normal Depth)	Proposed Conditions (Summer Pool)	Proposed Conditions (FEMA Regulatory Pool)	Existing Conditions (Normal Depth)	Existing Conditions (Summer Pool)	Existing Conditions (FEMA Regulatory Pool)	Proposed Impacts (Normal Depth)	Proposed Impacts (Summer Pool)	Project Impacts (FEMA Regulatory Pool)
River Sta	W.S. Elev (ft, NAVD88)	W.S. Elev (ft, NAVD88)	W.S. Elev (ft, NAVD88)	W.S. Elev (ft, NAVD88)	W.S. Elev (ft, NAVD88)	W.S. Elev (ft, NAVD88)	Δ W.S. Elev Prop -Existing (ft)	Δ W.S. Elev Prop -Existing (ft)	Δ W.S. Elev Prop -Existing (ft)
1974	2056.0	2062.5	2073.7	2056.0	2062.5	2073.7	0.0	0.0	**0.0**
1581	2055.9	2062.5	2073.7	2055.9	2062.5	2073.7	0.0	0.0	**0.0**
1544	Bridge Street								
1488	2055.8	2062.5	2073.7	2055.8	2062.5	2073.7	0.0	0.0	**0.0**
1303	2055.8	2062.5	2073.7	2055.8	2062.5	2073.7	0.0	0.0	**0.0**
856	2055.7	2062.5	2073.7	2055.7	2062.5	2073.7	0.0	0.0	**0.0**
570	2055.6	2062.5	2073.7	2055.6	2062.5	2073.7	0.0	0.0	**0.0**
551	Bypass 95 Off-Ramp								
531	2055.6	2062.5	2073.7	2055.6	2062.5	2073.7	0.0	0.0	**0.0**
496	2055.5	2062.5	2073.7	2055.5	2062.5	2073.7	0.0	0.0	**0.0**
466	US 95 Mainline Bridge								
436	2055.5	2062.5	2073.7	2055.5	2062.5	2073.7	0.0	0.0	**0.0**
387	2055.5	2062.5	2073.7	2055.5	2062.5	2073.7	0.0	0.0	**0.0**
374	Upstream Bridge Face - Project Bridge: Bridge 3.1 (Proposed)								
374	Downstream Bridge Face - Project Bridge: Bridge 3.1 (Existing)								
327	2055.4	2062.5	2073.7	2055.4	2062.5	2073.7	0.0	0.0	**0.0**
1	2055.4	2062.5	2073.7	2055.4	2062.5	2073.7	0.0	0.0	**0.0**

Preliminary Draft for Agency Review

Construction of Bridge 3.1 Over Sand Creek near Sandpoint, ID - 2% Annual Chance Comparison (Existing Conditions - Normal Depth)

River Sta	Profile	Q Total (cfs)	Min Ch El (ft)	W.S. Elev (ft)	Crit W.S. (ft)	E.G. Elev (ft)	E.G. Slope (ft/ft)	Vel Chnl (ft/s)	Flow Area (sq ft)	Top Width (ft)	Froude # Chl
1974	50-YR	2280	2050.23	2057.412	0	2057.52	0.000348	2.65	916.27	179.9	0.19
1581	50-YR	2280	2049.34	2057.313	2053.08	2057.38	0.000271	2.05	1141.8	219.08	0.15
1544	50-YR	Bridge Street									
1488	50-YR	2280	2049.54	2057.223	2053.23	2057.31	0.000358	2.38	1004.16	197.77	0.18
1303	50-YR	2280	2048.2	2057.192	0	2057.24	0.000226	1.88	1387.77	248.32	0.12
856	50-YR	2280	2046.95	2057.068	2051.41	2057.14	0.000187	2.22	1101.7	393.76	0.14
570	50-YR	2280	2047.51	2056.979	2052.39	2057.07	0.000287	2.51	981.08	383.56	0.17
551	50-YR	Bypass 95 Off-Ramp									
531	50-YR	2280	2047.51	2056.955	2052.39	2057.06	0.000311	2.61	918.54	382.59	0.18
496	50-YR	2280	2047.11	2056.946	2052.06	2057.05	0.000283	2.61	941.53	270.31	0.17
466	50-YR	US 95 Mainline Bridge									
436	50-YR	2280	2047.15	2056.911	2052.07	2057.02	0.000334	2.69	907.87	270.03	0.18
387	50-YR	2280	2045.98	2056.867	2050.71	2057	0.000279	2.95	836.24	120.75	0.18
337	50-YR	Project Bridge: Bridge 3.1 (Existing)									
327	50-YR	2280	2046.75	2056.743	2051.29	2056.9	0.000386	3.23	737.6	108.7	0.2
1	50-YR	2280	2047.18	2056.71	2052.53	2056.76	0.0002	1.78	1316.9	265.76	0.13

Preliminary Draft for Agency Review

Construction of Bridge 3.1 Over Sand Creek near Sandpoint, ID - 2% Annual Chance Comparison (Existing Conditions - Summer Pool)

River Sta	Profile	Q Total (cfs)	Min Ch El (ft)	W.S. Elev (ft)	Crit W.S. (ft)	E.G. Elev (ft)	E.G. Slope (ft/ft)	Vel Chnl (ft/s)	Flow Area (sq ft)	Top Width (ft)	Froude # Chl
1974	50-YR	2280	2050.23	2062.618	0	2062.64	0.000061	1.29	1947.42	215.32	0.07
1581	50-YR	2280	2049.34	2062.603	2053.08	2062.62	0.000039	1.01	2354.56	238.53	0.05
1544	50-YR	Bridge Street									
1488	50-YR	2280	2049.54	2062.588	2053.23	2062.61	0.000049	1.14	2111.67	215.78	0.06
1303	50-YR	2280	2048.2	2062.586	0	2062.6	0.000026	0.91	2786.33	269.27	0.05
856	50-YR	2280	2046.95	2062.575	2051.41	2062.59	0.000025	0.9	2986.76	405.78	0.04
570	50-YR	2280	2047.51	2062.56	2052.39	2062.58	0.000037	1.06	2315.02	447.24	0.05
551	50-YR	Bypass 95 Off-Ramp									
531	50-YR	2280	2047.51	2062.555	2052.39	2062.57	0.000042	1.12	2178.21	437.84	0.06
496	50-YR	2280	2047.11	2062.554	2052.06	2062.57	0.000039	1.12	2200.71	294.84	0.06
466	50-YR	US 95 Mainline Bridge									
436	50-YR	2280	2047.15	2062.55	2052.07	2062.57	0.000044	1.14	2167.33	292.84	0.06
387	50-YR	2280	2045.98	2062.528	2050.71	2062.56	0.000065	1.54	1673.58	250.89	0.07
337	50-YR	Project Bridge: Bridge 3.1 (Existing)									
327	50-YR	2280	2046.75	2062.496	2051.29	2062.54	0.000089	1.74	1409.96	125.06	0.08
1	50-YR	2280	2047.18	2062.5	2052.54	2062.51	0.000023	0.81	2996.85	315.99	0.04

Preliminary Draft for Agency Review

Construction of Bridge 3.1 Over Sand Creek near Sandpoint, ID - 2% Annual Chance Comparison (Existing Conditions - FEMA Pool)

River Sta	Profile	Q Total (cfs)	Min Ch El (ft)	W.S. Elev (ft)	Crit W.S. (ft)	E.G. Elev (ft)	E.G. Slope (ft/ft)	Vel Chnl (ft/s)	Flow Area (sq ft)	Top Width (ft)	Froude # Chl
1974	50-YR	2280	2050.23	2073.715	0	2073.72	0.000005	0.57	4688.35	270.17	0.02
1581	50-YR	2280	2049.34	2073.714	2053.08	2073.72	0.000003	0.47	5166.28	268.63	0.02
1544	50-YR	Bridge Street									
1488	50-YR	2280	2049.54	2073.712	2053.23	2073.72	0.000004	0.53	4790.46	290.65	0.02
1303	50-YR	2280	2048.2	2073.712	0	2073.71	0.000002	0.42	6069.79	331.55	0.02
856	50-YR	2280	2046.95	2073.711	2051.41	2073.71	0.000002	0.43	6338.14	528.2	0.02
570	50-YR	2280	2047.51	2073.709	2052.39	2073.71	0.000003	0.49	5172.46	588.08	0.02
551	50-YR	Bypass 95 Off-Ramp									
531	50-YR	2280	2047.51	2073.708	2052.39	2073.71	0.000004	0.52	4904.34	521.62	0.02
496	50-YR	2280	2047.11	2073.708	2052.06	2073.71	0.000004	0.53	4680.95	498.72	0.02
466	50-YR	US 95 Mainline Bridge									
436	50-YR	2280	2047.15	2073.706	2052.07	2073.71	0.000004	0.55	4475.96	501.64	0.02
387	50-YR	2280	2045.98	2073.703	2050.71	2073.71	0.000007	0.73	3520.8	322.96	0.03
337	50-YR	Project Bridge: Bridge 3.1 (Existing)									
327	50-YR	2280	2046.75	2073.697	2051.29	2073.71	0.000009	0.85	3009.55	163.91	0.03
1	50-YR	2280	2047.18	2073.7	2052.54	2073.7	0.000002	0.36	6857.8	609.21	0.01

Preliminary Draft for Agency Review

Construction of Bridge 3.1 Over Sand Creek near Sandpoint, ID - 2% Annual Chance Comparison (Proposed Conditions - Normal Depth)

River Sta	Profile	Q Total (cfs)	Min Ch El (ft)	W.S. Elev (ft)	Crit W.S. (ft)	E.G. Elev (ft)	E.G. Slope (ft/ft)	Vel Chnl (ft/s)	Flow Area (sq ft)	Top Width (ft)	Froude # Chl
1974	50-YR	2280	2050.23	2057.413	0	2057.52	0.000347	2.65	916.46	179.92	0.19
1581	50-YR	2280	2049.34	2057.313	2053.08	2057.38	0.000271	2.05	1141.96	219.08	0.15
1544	50-YR	Bridge Street									
1488	50-YR	2280	2049.54	2057.224	2053.23	2057.31	0.000358	2.38	1004.35	197.77	0.18
1303	50-YR	2280	2048.2	2057.193	0	2057.24	0.000226	1.88	1387.95	248.32	0.12
856	50-YR	2280	2046.95	2057.068	2051.41	2057.14	0.000187	2.22	1101.82	393.76	0.14
570	50-YR	2280	2047.51	2056.98	2052.39	2057.07	0.000287	2.51	981.21	383.57	0.17
551	50-YR	Bypass 95 Off-Ramp									
531	50-YR	2280	2047.51	2056.956	2052.39	2057.06	0.000311	2.61	918.69	382.6	0.18
496	50-YR	2280	2047.11	2056.947	2052.06	2057.05	0.000283	2.61	941.68	270.32	0.17
466	50-YR	US 95 Mainline Bridge									
436	50-YR	2280	2047.15	2056.912	2052.07	2057.02	0.000334	2.69	907.98	270.04	0.18
387	50-YR	2280	2045.98	2056.867	2050.71	2057	0.000279	2.95	836.33	120.76	0.18
374	50-YR	Upstream Bridge Face - Project Bridge: Bridge 3.1 (Proposed)									
374	50-YR	Downstream Bridge Face - Project Bridge: Bridge 3.1 (Existing)									
327	50-YR	2280	2046.75	2056.743	2051.29	2056.9	0.000386	3.23	737.6	108.7	0.2
1	50-YR	2280	2047.18	2056.71	2052.53	2056.76	0.0002	1.78	1316.98	265.78	0.13

Preliminary Draft for Agency Review

Construction of Bridge 3.1 Over Sand Creek near Sandpoint, ID - 2% Annual Chance Comparison (Proposed Conditions - Summer Pool)

River Sta	Profile	Q Total (cfs)	Min Ch El (ft)	W.S. Elev (ft)	Crit W.S. (ft)	E.G. Elev (ft)	E.G. Slope (ft/ft)	Vel Chnl (ft/s)	Flow Area (sq ft)	Top Width (ft)	Froude # Chl
1974	50-YR	2280	2050.23	2062.619	0	2062.64	0.000061	1.29	1947.68	215.33	0.07
1581	50-YR	2280	2049.34	2062.604	2053.08	2062.62	0.000039	1.01	2354.79	238.54	0.05
1544	50-YR	Bridge Street									
1488	50-YR	2280	2049.54	2062.589	2053.23	2062.61	0.000049	1.14	2111.88	215.78	0.06
1303	50-YR	2280	2048.2	2062.587	0	2062.6	0.000026	0.91	2786.59	269.28	0.05
856	50-YR	2280	2046.95	2062.576	2051.41	2062.59	0.000025	0.9	2987.03	405.78	0.04
570	50-YR	2280	2047.51	2062.561	2052.39	2062.58	0.000037	1.06	2315.24	447.24	0.05
551	50-YR	Bypass 95 Off-Ramp									
531	50-YR	2280	2047.51	2062.556	2052.39	2062.57	0.000042	1.12	2178.41	437.85	0.06
496	50-YR	2280	2047.11	2062.555	2052.06	2062.57	0.000039	1.12	2200.91	294.85	0.06
466	50-YR	US 95 Mainline Bridge									
436	50-YR	2280	2047.15	2062.551	2052.07	2062.57	0.000044	1.14	2167.53	292.84	0.06
387	50-YR	2280	2045.98	2062.529	2050.71	2062.56	0.000065	1.54	1673.74	250.9	0.07
374	50-YR	Upstream Bridge Face - Project Bridge: Bridge 3.1 (Proposed)									
374	50-YR	Downstream Bridge Face - Project Bridge: Bridge 3.1 (Existing)									
327	50-YR	2280	2046.75	2062.496	2051.29	2062.54	0.000089	1.74	1409.96	125.06	0.08
1	50-YR	2280	2047.18	2062.5	2052.54	2062.51	0.000023	0.81	2996.94	315.99	0.04

Preliminary Draft for Agency Review

Construction of Bridge 3.1 Over Sand Creek near Sandpoint, ID - 2% Annual Chance Comparison (Proposed Conditions - FEMA Pool)

River Sta	Profile	Q Total (cfs)	Min Ch El (ft)	W.S. Elev (ft)	Crit W.S. (ft)	E.G. Elev (ft)	E.G. Slope (ft/ft)	Vel Chnl (ft/s)	Flow Area (sq ft)	Top Width (ft)	Froude # Chl
1974	50-YR	2280	2050.23	2073.715	0	2073.72	0.000005	0.57	4688.55	270.18	0.02
1581	50-YR	2280	2049.34	2073.714	2053.08	2073.72	0.000003	0.47	5166.41	268.63	0.02
1544	50-YR	Bridge Street									
1488	50-YR	2280	2049.54	2073.712	2053.23	2073.72	0.000004	0.53	4790.6	290.66	0.02
1303	50-YR	2280	2048.2	2073.712	0	2073.72	0.000002	0.42	6069.95	331.55	0.02
856	50-YR	2280	2046.95	2073.712	2051.41	2073.71	0.000002	0.43	6338.31	528.23	0.02
570	50-YR	2280	2047.51	2073.709	2052.39	2073.71	0.000003	0.49	5172.6	588.09	0.02
551	50-YR	Bypass 95 Off-Ramp									
531	50-YR	2280	2047.51	2073.708	2052.39	2073.71	0.000004	0.52	4904.48	521.62	0.02
496	50-YR	2280	2047.11	2073.708	2052.06	2073.71	0.000004	0.53	4681.07	498.73	0.02
466	50-YR	US 95 Mainline Bridge									
436	50-YR	2280	2047.15	2073.707	2052.07	2073.71	0.000004	0.55	4476.07	501.64	0.02
387	50-YR	2280	2045.98	2073.703	2050.71	2073.71	0.000007	0.73	3520.88	322.96	0.03
374	50-YR	Upstream Bridge Face - Project Bridge: Bridge 3.1 (Proposed)									
374	50-YR	Downstream Bridge Face - Project Bridge: Bridge 3.1 (Existing)									
327	50-YR	2280	2046.75	2073.697	2051.29	2073.71	0.000009	0.85	3009.55	163.91	0.03
1	50-YR	2280	2047.18	2073.7	2052.54	2073.7	0.000002	0.36	6857.89	609.21	0.01

Preliminary Draft for Agency Review

Construction of Bridge 3.1 Over Sand Creek near Sandpoint, ID - 2% Annual Chance Comparison

	Proposed Conditions (Normal Depth)	Proposed Conditions (Summer Pool)	Proposed Conditions (FEMA Regulatory Pool)	Existing Conditions (Normal Depth)	Existing Conditions (Summer Pool)	Existing Conditions (FEMA Regulatory Pool)	Proposed Impacts (Normal Depth)	Proposed Impacts (Summer Pool)	Project Impacts (FEMA Regulatory Pool)
River Sta	W.S. Elev (ft, NAVD88)	W.S. Elev (ft, NAVD88)	W.S. Elev (ft, NAVD88)	W.S. Elev (ft, NAVD88)	W.S. Elev (ft, NAVD88)	W.S. Elev (ft, NAVD88)	Δ W.S. Elev Prop -Existing (ft)	Δ W.S. Elev Prop -Existing (ft)	Δ W.S. Elev Prop -Existing (ft)
1974	2057.4	2062.6	2073.7	2057.4	2062.6	2073.7	0.0	0.0	**0.0**
1581	2057.3	2062.6	2073.7	2057.3	2062.6	2073.7	0.0	0.0	**0.0**
1544	Bridge Street								
1488	2057.2	2062.6	2073.7	2057.2	2062.6	2073.7	0.0	0.0	**0.0**
1303	2057.2	2062.6	2073.7	2057.2	2062.6	2073.7	0.0	0.0	**0.0**
856	2057.1	2062.6	2073.7	2057.1	2062.6	2073.7	0.0	0.0	**0.0**
570	2057.0	2062.6	2073.7	2057.0	2062.6	2073.7	0.0	0.0	**0.0**
551	Bypass 95 Off-Ramp								
531	2057.0	2062.6	2073.7	2057.0	2062.6	2073.7	0.0	0.0	**0.0**
496	2056.9	2062.6	2073.7	2056.9	2062.6	2073.7	0.0	0.0	**0.0**
466	US 95 Mainline Bridge								
436	2056.9	2062.6	2073.7	2056.9	2062.6	2073.7	0.0	0.0	**0.0**
387	2056.9	2062.5	2073.7	2056.9	2062.5	2073.7	0.0	0.0	**0.0**
374	Upstream Bridge Face - Project Bridge: Bridge 3.1 (Proposed)								
374	Downstream Bridge Face - Project Bridge: Bridge 3.1 (Existing)								
327	2056.7	2062.5	2073.7	2056.7	2062.5	2073.7	0.0	0.0	**0.0**
1	2056.7	2062.5	2073.7	2056.7	2062.5	2073.7	0.0	0.0	**0.0**

Preliminary Draft for Agency Review

Construction of Bridge 3.1 Over Sand Creek near Sandpoint, ID - 1% Annual Chance Comparison (Existing Conditions - Normal Depth)

River Sta	Profile	Q Total (cfs)	Min Ch El (ft)	W.S. Elev (ft)	Crit W.S. (ft)	E.G. Elev (ft)	E.G. Slope (ft/ft)	Vel Chnl (ft/s)	Flow Area (sq ft)	Top Width (ft)	Froude # Chl
1974	100-YR	2820	2050.23	2058.214	0	2058.34	0.000344	2.86	1062.86	185.56	0.19
1581	100-YR	2820	2049.34	2058.121	2053.41	2058.2	0.000262	2.2	1320.59	223.4	0.15
1544	100-YR	Bridge Street									
1488	100-YR	2820	2049.54	2058.027	2053.62	2058.12	0.000344	2.55	1164.06	200.24	0.18
1303	100-YR	2820	2048.2	2057.998	0	2058.05	0.000228	2.02	1589.4	251.9	0.12
856	100-YR	2820	2046.95	2057.86	2051.82	2057.95	0.000202	2.46	1232.06	395.63	0.15
570	100-YR	2820	2047.51	2057.768	2052.8	2057.88	0.000292	2.73	1116.98	398.26	0.18
551	100-YR	Bypass 95 Off-Ramp									
531	100-YR	2820	2047.51	2057.738	2052.8	2057.86	0.000322	2.86	1040.05	396.01	0.19
496	100-YR	2820	2047.11	2057.729	2052.54	2057.85	0.000296	2.87	1062.06	274.84	0.18
466	100-YR	US 95 Mainline Bridge									
436	100-YR	2820	2047.15	2057.688	2052.54	2057.82	0.000354	2.97	1021.75	274.63	0.19
387	100-YR	2820	2045.98	2057.628	2051.22	2057.79	0.000317	3.33	931.28	128.89	0.19
337	100-YR	Project Bridge: Bridge 3.1 (Existing)									
327	100-YR	2820	2046.75	2057.481	2051.85	2057.68	0.000431	3.63	818.52	110.8	0.22
1	100-YR	2820	2047.18	2057.46	2052.81	2057.52	0.0002	1.92	1519.4	274.34	0.13

Preliminary Draft for Agency Review

Construction of Bridge 3.1 Over Sand Creek near Sandpoint, ID - 1% Annual Chance Comparison (Existing Conditions - Summer Pool)

River Sta	Profile	Q Total (cfs)	Min Ch El (ft)	W.S. Elev (ft)	Crit W.S. (ft)	E.G. Elev (ft)	E.G. Slope (ft/ft)	Vel Chnl (ft/s)	Flow Area (sq ft)	Top Width (ft)	Froude # Chl
1974	100-YR	2820	2050.23	2062.68	0	2062.72	0.000091	1.59	1960.89	215.63	0.08
1581	100-YR	2820	2049.34	2062.658	2053.41	2062.68	0.000058	1.24	2367.72	238.69	0.07
1544	100-YR	Bridge Street									
1488	100-YR	2820	2049.54	2062.635	2053.62	2062.66	0.000074	1.4	2121.85	215.99	0.07
1303	100-YR	2820	2048.2	2062.632	0	2062.65	0.000039	1.13	2798.7	269.48	0.06
856	100-YR	2820	2046.95	2062.616	2051.82	2062.63	0.000037	1.11	2997.84	405.85	0.05
570	100-YR	2820	2047.51	2062.593	2052.8	2062.62	0.000057	1.31	2322.23	447.36	0.07
551	100-YR	Bypass 95 Off-Ramp									
531	100-YR	2820	2047.51	2062.585	2052.8	2062.61	0.000063	1.38	2184.47	437.93	0.07
496	100-YR	2820	2047.11	2062.583	2052.54	2062.61	0.000059	1.38	2206.62	294.92	0.07
466	100-YR	US 95 Mainline Bridge									
436	100-YR	2820	2047.15	2062.576	2052.54	2062.6	0.000066	1.41	2172.67	292.91	0.07
387	100-YR	2820	2045.98	2062.544	2051.22	2062.59	0.000099	1.91	1676.12	251.1	0.09
337	100-YR	Project Bridge: Bridge 3.1 (Existing)									
327	100-YR	2820	2046.75	2062.494	2051.85	2062.56	0.000136	2.15	1409.68	125.06	0.1
1	100-YR	2820	2047.18	2062.5	2052.84	2062.52	0.000036	1	2996.85	315.99	0.05

Preliminary Draft for Agency Review

Construction of Bridge 3.1 Over Sand Creek near Sandpoint, ID - 1% Annual Chance Comparison (Existing Conditions - FEMA Pool)

River Sta	Profile	Q Total (cfs)	Min Ch El (ft)	W.S. Elev (ft)	Crit W.S. (ft)	E.G. Elev (ft)	E.G. Slope (ft/ft)	Vel Chnl (ft/s)	Flow Area (sq ft)	Top Width (ft)	Froude # Chl
1974	100-YR	2820	2050.23	2073.723	0	2073.73	0.000007	0.7	4690.6	270.19	0.03
1581	100-YR	2820	2049.34	2073.722	2053.41	2073.73	0.000005	0.58	5168.38	268.66	0.02
1544	100-YR	Bridge Street									
1488	100-YR	2820	2049.54	2073.719	2053.62	2073.73	0.000006	0.65	4792.52	290.89	0.02
1303	100-YR	2820	2048.2	2073.719	0	2073.72	0.000004	0.52	6072.14	331.57	0.02
856	100-YR	2820	2046.95	2073.718	2051.82	2073.72	0.000004	0.53	6340.38	528.53	0.02
570	100-YR	2820	2047.51	2073.714	2052.8	2073.72	0.000005	0.6	5173.94	588.21	0.02
551	100-YR	Bypass 95 Off-Ramp									
531	100-YR	2820	2047.51	2073.712	2052.8	2073.72	0.000006	0.64	4905.59	521.62	0.02
496	100-YR	2820	2047.11	2073.712	2052.54	2073.72	0.000006	0.65	4681.98	498.8	0.02
466	100-YR	US 95 Mainline Bridge									
436	100-YR	2820	2047.15	2073.71	2052.54	2073.72	0.000007	0.69	4476.74	501.65	0.02
387	100-YR	2820	2045.98	2073.704	2051.22	2073.72	0.00001	0.9	3521.08	322.96	0.03
337	100-YR	Project Bridge: Bridge 3.1 (Existing)									
327	100-YR	2820	2046.75	2073.696	2051.85	2073.71	0.000014	1.05	3009.36	163.9	0.04
1	100-YR	2820	2047.18	2073.7	2052.84	2073.7	0.000003	0.45	6857.8	609.21	0.02

Preliminary Draft for Agency Review

Construction of Bridge 3.1 Over Sand Creek near Sandpoint, ID - 1% Annual Chance Comparison (Proposed Conditions - Normal Depth)

River Sta	Profile	Q Total (cfs)	Min Ch El (ft)	W.S. Elev (ft)	Crit W.S. (ft)	E.G. Elev (ft)	E.G. Slope (ft/ft)	Vel Chnl (ft/s)	Flow Area (sq ft)	Top Width (ft)	Froude # Chl
1974	100-YR	2820	2050.23	2058.215	0	2058.34	0.000344	2.86	1063.07	185.58	0.19
1581	100-YR	2820	2049.34	2058.122	2053.41	2058.2	0.000262	2.2	1320.8	223.4	0.15
1544	100-YR	Bridge Street									
1488	100-YR	2820	2049.54	2058.028	2053.62	2058.13	0.000344	2.55	1164.31	200.24	0.18
1303	100-YR	2820	2048.2	2058	0	2058.05	0.000228	2.02	1589.71	251.91	0.12
856	100-YR	2820	2046.95	2057.861	2051.82	2057.95	0.000202	2.46	1232.26	395.63	0.15
570	100-YR	2820	2047.51	2057.77	2052.8	2057.88	0.000292	2.73	1117.23	398.3	0.18
551	100-YR	Bypass 95 Off-Ramp									
531	100-YR	2820	2047.51	2057.74	2052.8	2057.86	0.000321	2.86	1040.32	396.04	0.19
496	100-YR	2820	2047.11	2057.73	2052.54	2057.85	0.000296	2.87	1062.29	274.85	0.18
466	100-YR	US 95 Mainline Bridge									
436	100-YR	2820	2047.15	2057.69	2052.54	2057.82	0.000353	2.97	1021.97	274.64	0.19
387	100-YR	2820	2045.98	2057.629	2051.22	2057.79	0.000317	3.33	931.47	128.91	0.19
374	100-YR	Upstream Bridge Face - Project Bridge: Bridge 3.1 (Proposed)									
374	100-YR	Downstream Bridge Face - Project Bridge: Bridge 3.1 (Existing)									
327	100-YR	2820	2046.75	2057.481	2051.85	2057.68	0.000431	3.63	818.52	110.8	0.22
1	100-YR	2820	2047.18	2057.46	2052.81	2057.52	0.0002	1.92	1519.49	274.34	0.13

Preliminary Draft for Agency Review

Construction of Bridge 3.1 Over Sand Creek near Sandpoint, ID - 1% Annual Chance Comparison (Proposed Conditions - Summer Pool)

River Sta	Profile	Q Total (cfs)	Min Ch El (ft)	W.S. Elev (ft)	Crit W.S. (ft)	E.G. Elev (ft)	E.G. Slope (ft/ft)	Vel Chnl (ft/s)	Flow Area (sq ft)	Top Width (ft)	Froude # Chl
1974	100-YR	2820	2050.23	2062.682	0	2062.72	0.000091	1.59	1961.36	215.64	0.08
1581	100-YR	2820	2049.34	2062.66	2053.41	2062.68	0.000058	1.24	2368.19	238.7	0.07
1544	100-YR	Bridge Street									
1488	100-YR	2820	2049.54	2062.637	2053.62	2062.67	0.000074	1.4	2122.27	216	0.07
1303	100-YR	2820	2048.2	2062.634	0	2062.65	0.000039	1.13	2799.22	269.49	0.06
856	100-YR	2820	2046.95	2062.618	2051.82	2062.63	0.000037	1.11	2998.37	405.86	0.05
570	100-YR	2820	2047.51	2062.595	2052.8	2062.62	0.000056	1.31	2322.72	447.37	0.07
551	100-YR	Bypass 95 Off-Ramp									
531	100-YR	2820	2047.51	2062.587	2052.8	2062.62	0.000063	1.38	2184.93	437.94	0.07
496	100-YR	2820	2047.11	2062.586	2052.54	2062.61	0.000059	1.38	2207.06	294.92	0.07
466	100-YR	US 95 Mainline Bridge									
436	100-YR	2820	2047.15	2062.578	2052.54	2062.61	0.000066	1.41	2173.11	292.92	0.07
387	100-YR	2820	2045.98	2062.546	2051.22	2062.6	0.000099	1.91	1676.48	251.13	0.09
374	100-YR	Upstream Bridge Face - Project Bridge: Bridge 3.1 (Proposed)									
374	100-YR	Downstream Bridge Face - Project Bridge: Bridge 3.1 (Existing)									
327	100-YR	2820	2046.75	2062.494	2051.85	2062.56	0.000136	2.15	1409.68	125.06	0.1
1	100-YR	2820	2047.18	2062.5	2052.84	2062.52	0.000036	1	2996.94	315.99	0.05

Preliminary Draft for Agency Review

Construction of Bridge 3.1 Over Sand Creek near Sandpoint, ID - 1% Annual Chance Comparison (Proposed Conditions - FEMA Pool)

River Sta	Profile	Q Total (cfs)	Min Ch El (ft)	W.S. Elev (ft)	Crit W.S. (ft)	E.G. Elev (ft)	E.G. Slope (ft/ft)	Vel Chnl (ft/s)	Flow Area (sq ft)	Top Width (ft)	Froude # Chl
1974	100-YR	2820	2050.23	2073.724	0	2073.73	0.000007	0.7	4690.79	270.2	0.03
1581	100-YR	2820	2049.34	2073.722	2053.41	2073.73	0.000005	0.58	5168.51	268.66	0.02
1544	100-YR	Bridge Street									
1488	100-YR	2820	2049.54	2073.719	2053.62	2073.73	0.000006	0.65	4792.66	290.91	0.02
1303	100-YR	2820	2048.2	2073.719	0	2073.72	0.000004	0.52	6072.3	331.57	0.02
856	100-YR	2820	2046.95	2073.718	2051.82	2073.72	0.000004	0.53	6340.56	528.56	0.02
570	100-YR	2820	2047.51	2073.715	2052.8	2073.72	0.000005	0.6	5174.08	588.22	0.02
551	100-YR	Bypass 95 Off-Ramp									
531	100-YR	2820	2047.51	2073.713	2052.8	2073.72	0.000006	0.64	4905.73	521.62	0.02
496	100-YR	2820	2047.11	2073.712	2052.54	2073.72	0.000006	0.65	4682.11	498.81	0.02
466	100-YR	US 95 Mainline Bridge									
436	100-YR	2820	2047.15	2073.71	2052.54	2073.72	0.000007	0.69	4476.84	501.65	0.02
387	100-YR	2820	2045.98	2073.705	2051.22	2073.72	0.00001	0.9	3521.17	322.96	0.03
374	100-YR	Upstream Bridge Face - Project Bridge: Bridge 3.1 (Proposed)									
374	100-YR	Downstream Bridge Face - Project Bridge: Bridge 3.1 (Existing)									
327	100-YR	2820	2046.75	2073.696	2051.85	2073.71	0.000014	1.05	3009.36	163.9	0.04
1	100-YR	2820	2047.18	2073.7	2052.84	2073.7	0.000003	0.45	6857.89	609.21	0.02

Preliminary Draft for Agency Review

Construction of Bridge 3.1 Over Sand Creek near Sandpoint, ID - 1% Annual Chance Comparison

	Proposed Conditions (Normal Depth)	Proposed Conditions (Summer Pool)	Proposed Conditions (FEMA Regulatory Pool)	Existing Conditions (Normal Depth)	Existing Conditions (Summer Pool)	Existing Conditions (FEMA Regulatory Pool)	Proposed Impacts (Normal Depth)	Proposed Impacts (Summer Pool)	Project Impacts (FEMA Regulatory Pool)
River Sta	W.S. Elev (ft, NAVD88)	W.S. Elev (ft, NAVD88)	W.S. Elev (ft, NAVD88)	W.S. Elev (ft, NAVD88)	W.S. Elev (ft, NAVD88)	W.S. Elev (ft, NAVD88)	Δ W.S. Elev Prop -Existing (ft)	Δ W.S. Elev Prop -Existing (ft)	Δ W.S. Elev Prop -Existing (ft)
1974	2058.2	2062.7	2073.7	2058.2	2062.7	2073.7	0.0	0.0	**0.0**
1581	2058.1	2062.7	2073.7	2058.1	2062.7	2073.7	0.0	0.0	**0.0**
1544	Bridge Street								
1488	2058.0	2062.6	2073.7	2058.0	2062.6	2073.7	0.0	0.0	**0.0**
1303	2058.0	2062.6	2073.7	2058.0	2062.6	2073.7	0.0	0.0	**0.0**
856	2057.9	2062.6	2073.7	2057.9	2062.6	2073.7	0.0	0.0	**0.0**
570	2057.8	2062.6	2073.7	2057.8	2062.6	2073.7	0.0	0.0	**0.0**
551	Bypass 95 Off-Ramp								
531	2057.7	2062.6	2073.7	2057.7	2062.6	2073.7	0.0	0.0	**0.0**
496	2057.7	2062.6	2073.7	2057.7	2062.6	2073.7	0.0	0.0	**0.0**
466	US 95 Mainline Bridge								
436	2057.7	2062.6	2073.7	2057.7	2062.6	2073.7	0.0	0.0	**0.0**
387	2057.6	2062.5	2073.7	2057.6	2062.5	2073.7	0.0	0.0	**0.0**
374	Upstream Bridge Face - Project Bridge: Bridge 3.1 (Proposed)								
374	Downstream Bridge Face - Project Bridge: Bridge 3.1 (Existing)								
327	2057.5	2062.5	2073.7	2057.5	2062.5	2073.7	0.0	0.0	**0.0**
1	2057.5	2062.5	2073.7	2057.5	2062.5	2073.7	0.0	0.0	**0.0**

Preliminary Draft for Agency Review

Construction of Bridge 3.1 Over Sand Creek near Sandpoint, ID - 0.2% Annual Chance Comparison (Existing Conditions - Normal Depth)

River Sta	Profile	Q Total (cfs)	Min Ch El (ft)	W.S. Elev (ft)	Crit W.S. (ft)	E.G. Elev (ft)	E.G. Slope (ft/ft)	Vel Chnl (ft/s)	Flow Area (sq ft)	Top Width (ft)	Froude # Chl
1974	500-YR	4015	2050.23	2059.774	0	2059.93	0.000339	3.25	1360.99	196.57	0.2
1581	500-YR	4015	2049.34	2059.691	2054.06	2059.79	0.00025	2.49	1675.14	227.42	0.16
1544	500-YR	Bridge Street									
1488	500-YR	4015	2049.54	2059.585	2054.27	2059.71	0.000328	2.88	1479.97	205.2	0.18
1303	500-YR	4015	2048.2	2059.564	0	2059.63	0.00023	2.27	1989.23	258.48	0.13
856	500-YR	4015	2046.95	2059.396	2052.6	2059.52	0.000226	2.92	1486.32	399.27	0.16
570	500-YR	4015	2047.51	2059.302	2053.64	2059.44	0.000301	3.15	1389.2	413.36	0.19
551	500-YR	Bypass 95 Off-Ramp									
531	500-YR	4015	2047.51	2059.26	2053.6	2059.42	0.000337	3.32	1283.23	411.89	0.2
496	500-YR	4015	2047.11	2059.25	2053.42	2059.41	0.000319	3.35	1299.61	281.5	0.19
466	500-YR	US 95 Mainline Bridge									
436	500-YR	4015	2047.15	2059.197	2053.38	2059.38	0.000386	3.49	1246.2	281.17	0.2
387	500-YR	4015	2045.98	2059.106	2052.23	2059.34	0.00038	4.01	1133.08	145.2	0.21
337	500-YR	Project Bridge: Bridge 3.1 (Existing)									
327	500-YR	4015	2046.75	2058.907	2052.9	2059.19	0.000509	4.37	979.44	114.85	0.24
1	500-YR	4015	2047.18	2058.916	2053.3	2058.99	0.0002	2.18	1924.47	283.56	0.14

Preliminary Draft for Agency Review

Construction of Bridge 3.1 Over Sand Creek near Sandpoint, ID - 0.2% Annual Chance Comparison (Existing Conditions - Summer Pool)

River Sta	Profile	Q Total (cfs)	Min Ch El (ft)	W.S. Elev (ft)	Crit W.S. (ft)	E.G. Elev (ft)	E.G. Slope (ft/ft)	Vel Chnl (ft/s)	Flow Area (sq ft)	Top Width (ft)	Froude # Chl
1974	500-YR	4015	2050.23	2062.859	0	2062.93	0.000174	2.22	1999.5	216.51	0.11
1581	500-YR	4015	2049.34	2062.817	2054.06	2062.86	0.000112	1.74	2405.7	239.16	0.09
1544	500-YR	Bridge Street									
1488	500-YR	4015	2049.54	2062.771	2054.28	2062.83	0.000144	1.97	2151.26	216.61	0.1
1303	500-YR	4015	2048.2	2062.764	0	2062.8	0.000076	1.58	2834.53	270.09	0.08
856	500-YR	4015	2046.95	2062.733	2052.6	2062.76	0.000073	1.56	3030.01	406.08	0.08
570	500-YR	4015	2047.51	2062.688	2053.78	2062.74	0.000111	1.84	2343.59	447.73	0.09
551	500-YR	Bypass 95 Off-Ramp									
531	500-YR	4015	2047.51	2062.674	2053.74	2062.73	0.000125	1.95	2203.04	438.18	0.1
496	500-YR	4015	2047.11	2062.67	2053.58	2062.72	0.000117	1.94	2224.3	295.14	0.1
466	500-YR	US 95 Mainline Bridge									
436	500-YR	4015	2047.15	2062.656	2053.56	2062.71	0.000131	2	2188.6	293.13	0.1
387	500-YR	4015	2045.98	2062.59	2052.23	2062.69	0.000197	2.7	1683.75	251.74	0.13
337	500-YR	Project Bridge: Bridge 3.1 (Existing)									
327	500-YR	4015	2046.75	2062.488	2052.9	2062.63	0.000275	3.07	1408.89	125.04	0.15
1	500-YR	4015	2047.18	2062.5	2053.29	2062.53	0.000072	1.42	2996.85	315.99	0.07

Preliminary Draft for Agency Review

Construction of Bridge 3.1 Over Sand Creek near Sandpoint, ID - 0.2% Annual Chance Comparison (Existing Conditions - FEMA Pool)

River Sta	Profile	Q Total (cfs)	Min Ch El (ft)	W.S. Elev (ft)	Crit W.S. (ft)	E.G. Elev (ft)	E.G. Slope (ft/ft)	Vel Chnl (ft/s)	Flow Area (sq ft)	Top Width (ft)	Froude # Chl
1974	500-YR	4015	2050.23	2073.746	0	2073.76	0.000014	1	4696.86	270.25	0.04
1581	500-YR	4015	2049.34	2073.743	2054.06	2073.75	0.00001	0.83	5174.22	268.72	0.03
1544	500-YR	Bridge Street									
1488	500-YR	4015	2049.54	2073.738	2054.28	2073.75	0.000013	0.92	4797.99	291.49	0.03
1303	500-YR	4015	2048.2	2073.738	0	2073.75	0.000007	0.74	6078.45	331.61	0.03
856	500-YR	4015	2046.95	2073.735	2052.6	2073.74	0.000008	0.76	6346.61	529.44	0.03
570	500-YR	4015	2047.51	2073.729	2053.78	2073.74	0.00001	0.86	5178.19	588.58	0.03
551	500-YR	Bypass 95 Off-Ramp									
531	500-YR	4015	2047.51	2073.725	2053.74	2073.74	0.000012	0.91	4909.25	521.64	0.03
496	500-YR	4015	2047.11	2073.724	2053.58	2073.74	0.000012	0.93	4685.09	499.05	0.03
466	500-YR	US 95 Mainline Bridge									
436	500-YR	4015	2047.15	2073.721	2053.56	2073.73	0.000014	0.98	4479.02	501.67	0.04
387	500-YR	4015	2045.98	2073.709	2052.23	2073.73	0.000021	1.28	3521.89	322.96	0.04
337	500-YR	Project Bridge: Bridge 3.1 (Existing)									
327	500-YR	4015	2046.75	2073.691	2052.9	2073.72	0.000029	1.5	3008.67	163.88	0.05
1	500-YR	4015	2047.18	2073.7	2053.29	2073.71	0.000006	0.64	6857.8	609.21	0.02

Preliminary Draft for Agency Review

Construction of Bridge 3.1 Over Sand Creek near Sandpoint, ID - 0.2% Annual Chance Comparison (Proposed Conditions - Normal Depth)

River Sta	Profile	Q Total (cfs)	Min Ch El (ft)	W.S. Elev (ft)	Crit W.S. (ft)	E.G. Elev (ft)	E.G. Slope (ft/ft)	Vel Chnl (ft/s)	Flow Area (sq ft)	Top Width (ft)	Froude # Chl
1974	500-YR	4015	2050.23	2059.778	0	2059.93	0.000338	3.24	1361.7	196.6	0.2
1581	500-YR	4015	2049.34	2059.695	2054.06	2059.79	0.000249	2.49	1675.91	227.44	0.16
1544	500-YR	Bridge Street									
1488	500-YR	4015	2049.54	2059.589	2054.27	2059.71	0.000328	2.88	1480.67	205.22	0.18
1303	500-YR	4015	2048.2	2059.567	0	2059.64	0.000229	2.27	1990.12	258.49	0.13
856	500-YR	4015	2046.95	2059.399	2052.6	2059.52	0.000226	2.92	1486.92	399.27	0.16
570	500-YR	4015	2047.51	2059.305	2053.64	2059.45	0.000301	3.15	1389.81	413.39	0.19
551	500-YR	Bypass 95 Off-Ramp									
531	500-YR	4015	2047.51	2059.264	2053.6	2059.43	0.000336	3.31	1283.79	411.92	0.2
496	500-YR	4015	2047.11	2059.253	2053.42	2059.41	0.000318	3.34	1300.15	281.51	0.19
466	500-YR	US 95 Mainline Bridge									
436	500-YR	4015	2047.15	2059.2	2053.38	2059.38	0.000386	3.49	1246.71	281.18	0.2
387	500-YR	4015	2045.98	2059.109	2052.23	2059.34	0.000379	4.01	1133.58	145.25	0.21
374	500-YR	Upstream Bridge Face - Project Bridge: Bridge 3.1 (Proposed)									
374	500-YR	Downstream Bridge Face - Project Bridge: Bridge 3.1 (Existing)									
327	500-YR	4015	2046.75	2058.907	2052.9	2059.19	0.000509	4.37	979.41	114.85	0.24
1	500-YR	4015	2047.18	2058.916	2053.3	2058.99	0.0002	2.18	1924.48	283.55	0.14

Preliminary Draft for Agency Review

Construction of Bridge 3.1 Over Sand Creek near Sandpoint, ID - 0.2% Annual Chance Comparison (Proposed Conditions - Summer Pool)

River Sta	Profile	Q Total (cfs)	Min Ch El (ft)	W.S. Elev (ft)	Crit W.S. (ft)	E.G. Elev (ft)	E.G. Slope (ft/ft)	Vel Chnl (ft/s)	Flow Area (sq ft)	Top Width (ft)	Froude # Chl
1974	500-YR	4015	2050.23	2062.863	0	2062.93	0.000173	2.22	2000.4	216.53	0.11
1581	500-YR	4015	2049.34	2062.821	2054.06	2062.87	0.000112	1.74	2406.63	239.17	0.09
1544	500-YR	Bridge Street									
1488	500-YR	4015	2049.54	2062.775	2054.28	2062.83	0.000144	1.97	2152.11	216.62	0.1
1303	500-YR	4015	2048.2	2062.768	0	2062.8	0.000076	1.58	2835.58	270.1	0.08
856	500-YR	4015	2046.95	2062.737	2052.6	2062.77	0.000073	1.56	3031.08	406.08	0.08
570	500-YR	4015	2047.51	2062.692	2053.78	2062.74	0.000111	1.84	2344.47	447.75	0.09
551	500-YR	Bypass 95 Off-Ramp									
531	500-YR	4015	2047.51	2062.678	2053.74	2062.73	0.000124	1.95	2203.92	438.2	0.1
496	500-YR	4015	2047.11	2062.674	2053.58	2062.73	0.000117	1.94	2225.09	295.15	0.1
466	500-YR	US 95 Mainline Bridge									
436	500-YR	4015	2047.15	2062.659	2053.56	2062.72	0.000131	1.99	2189.38	293.14	0.1
387	500-YR	4015	2045.98	2062.594	2052.23	2062.7	0.000197	2.7	1684.43	251.8	0.13
374	500-YR	Upstream Bridge Face - Project Bridge: Bridge 3.1 (Proposed)									
374	500-YR	Downstream Bridge Face - Project Bridge: Bridge 3.1 (Existing)									
327	500-YR	4015	2046.75	2062.488	2052.9	2062.63	0.000275	3.07	1408.89	125.04	0.15
1	500-YR	4015	2047.18	2062.5	2053.29	2062.53	0.000072	1.42	2996.94	315.99	0.07

Preliminary Draft for Agency Review

Construction of Bridge 3.1 Over Sand Creek near Sandpoint, ID - 0.2% Annual Chance Comparison (Proposed Conditions - FEMA Pool)

River Sta	Profile	Q Total (cfs)	Min Ch El (ft)	W.S. Elev (ft)	Crit W.S. (ft)	E.G. Elev (ft)	E.G. Slope (ft/ft)	Vel Chnl (ft/s)	Flow Area (sq ft)	Top Width (ft)	Froude # Chl
1974	500-YR	4015	2050.23	2073.747	0	2073.76	0.000014	1	4697.12	270.26	0.04
1581	500-YR	4015	2049.34	2073.744	2054.06	2073.75	0.00001	0.83	5174.41	268.72	0.03
1544	500-YR	Bridge Street									
1488	500-YR	4015	2049.54	2073.738	2054.28	2073.75	0.000013	0.92	4798.21	291.51	0.03
1303	500-YR	4015	2048.2	2073.739	0	2073.75	0.000007	0.74	6078.69	331.61	0.03
856	500-YR	4015	2046.95	2073.736	2052.6	2073.74	0.000008	0.76	6346.87	529.48	0.03
570	500-YR	4015	2047.51	2073.729	2053.78	2073.74	0.00001	0.86	5178.4	588.6	0.03
551	500-YR	Bypass 95 Off-Ramp									
531	500-YR	4015	2047.51	2073.726	2053.74	2073.74	0.000012	0.91	4909.46	521.65	0.03
496	500-YR	4015	2047.11	2073.725	2053.58	2073.74	0.000012	0.93	4685.28	499.06	0.03
466	500-YR	US 95 Mainline Bridge									
436	500-YR	4015	2047.15	2073.721	2053.56	2073.74	0.000014	0.98	4479.17	501.67	0.04
387	500-YR	4015	2045.98	2073.71	2052.23	2073.73	0.000021	1.28	3522.05	322.96	0.04
374	500-YR	Upstream Bridge Face - Project Bridge: Bridge 3.1 (Proposed)									
374	500-YR	Downstream Bridge Face - Project Bridge: Bridge 3.1 (Existing)									
327	500-YR	4015	2046.75	2073.691	2052.9	2073.72	0.000029	1.5	3008.67	163.88	0.05
1	500-YR	4015	2047.18	2073.7	2053.29	2073.71	0.000006	0.64	6857.89	609.21	0.02

Preliminary Draft for Agency Review

Construction of Bridge 3.1 Over Sand Creek near Sandpoint, ID - 0.2% Annual Chance Comparison

	Proposed Conditions (Normal Depth)	Proposed Conditions (Summer Pool)	Proposed Conditions (FEMA Regulatory Pool)	Existing Conditions (Normal Depth)	Existing Conditions (Summer Pool)	Existing Conditions (FEMA Regulatory Pool)	Proposed Impacts (Normal Depth)	Proposed Impacts (Summer Pool)	Project Impacts (FEMA Regulatory Pool)
River Sta	W.S. Elev (ft, NAVD88)	W.S. Elev (ft, NAVD88)	W.S. Elev (ft, NAVD88)	W.S. Elev (ft, NAVD88)	W.S. Elev (ft, NAVD88)	W.S. Elev (ft, NAVD88)	Δ W.S. Elev Prop -Existing (ft)	Δ W.S. Elev Prop -Existing (ft)	Δ W.S. Elev Prop -Existing (ft)
1974	2059.8	2062.9	2073.7	2059.8	2062.9	2073.7	0.0	0.0	**0.0**
1581	2059.7	2062.8	2073.7	2059.7	2062.8	2073.7	0.0	0.0	**0.0**
1544	Bridge Street								
1488	2059.6	2062.8	2073.7	2059.6	2062.8	2073.7	0.0	0.0	**0.0**
1303	2059.6	2062.8	2073.7	2059.6	2062.8	2073.7	0.0	0.0	**0.0**
856	2059.4	2062.7	2073.7	2059.4	2062.7	2073.7	0.0	0.0	**0.0**
570	2059.3	2062.7	2073.7	2059.3	2062.7	2073.7	0.0	0.0	**0.0**
551	Bypass 95 Off-Ramp								
531	2059.3	2062.7	2073.7	2059.3	2062.7	2073.7	0.0	0.0	**0.0**
496	2059.3	2062.7	2073.7	2059.3	2062.7	2073.7	0.0	0.0	**0.0**
466	US 95 Mainline Bridge								
436	2059.2	2062.7	2073.7	2059.2	2062.7	2073.7	0.0	0.0	**0.0**
387	2059.1	2062.6	2073.7	2059.1	2062.6	2073.7	0.0	0.0	**0.0**
374	Upstream Bridge Face - Project Bridge: Bridge 3.1 (Proposed)								
374	Downstream Bridge Face - Project Bridge: Bridge 3.1 (Existing)								
327	2058.9	2062.5	2073.7	2058.9	2062.5	2073.7	0.0	0.0	**0.0**
1	2058.9	2062.5	2073.7	2058.9	2062.5	2073.7	0.0	0.0	**0.0**

Preliminary Draft for Agency Review

HANSON

TECHNICAL MEMORANDUM

TO:	BNSF Railway Company
FROM:	Garrett Litteken, P.E., CFM; Tony Comerio, P.E. CFM
DATE:	11/13/2018
SUBJECT:	14R0057 – Bridge 3.9 over Lake Pend Oreille H&H Technical Summary

Preliminary Draft for Agency Review

INTRODUCTION

This memorandum summarizes the hydraulic investigation for the proposed Bridge 3.9, which is part of BNSF's Sandpoint Junction Project. BNSF Proposed Bridge No. 3.9 crosses over Lake Pend Oreille in Sandpoint, ID in Bonner County. The proposed bridge will run parallel to the existing 4,764-ft long, 89 span structure. The proposed structure will be constructed approximately 50-ft west (downstream) of the existing bridge and has a length of 4,874-ft with 48 spans.

Hydraulics modeling of the crossing was developed from a combination of available FEMA data, record construction drawings of the existing bridges, project hydrographic survey data at Bridge 3.9 and hydrographic survey data from the USACE for Lake Pend Oreille and the Pend Oreille River. The existing railroad bridge and the existing Highway 95 roadway bridge were included in a hydraulic analysis to assess floodplain impacts at the railroad bridge. A project location map is provided in Attachment A and site photos are provided in Attachment B.

The proposed bridge structure is within the FEMA regulatory floodplain limits and is sufficiently sized to convey Lake Pend Oreille flow with no significant adverse impacts. The proposed bridge opening is less restrictive and has fewer bridge piers than the existing bridge. The hydraulic analysis utilized 1-D HEC-RAS hydraulic modeling to quantify water surface impacts of the proposed bridge design. Pre-final plans (99%) are included in Attachment F

DATA COLLECTION

FEMA floodplain mapping and associated Base Flood Elevations (BFE) for Lake Pend Oreille are based on statistical information from USGS gaging station at Hope, ID (No. 12392500) which is operated in cooperation with the U.S. Army Corps of Engineers (USACE). Daily data has been recorded at this site since October 1970 and represents a drainage area of 22,900 square-miles. The lake pool elevation is controlled by Albeni Falls Dam on Pend Oreille River near Newport, Washington. The dam has been operated by the USACE since 1952. The maximum lake pool at the USGS gage at Hope is 2,067.5-ft (NGVD29) or 2,071.37 (NAVD88). This pool represents the limit of the USACE's flowage right-of-way. Normal full pool on the lake is 2,062.5-ft (NGVD29) or 2066.37-ft (NAVD88) and minimum pool is 2,049.7-ft (NGVD29) or 2,053.57 (NAVD88).

The FEMA Flood Insurance Study (FIS) dated July 7, 2014, has a 100-year BFE of 2073.7 (NAVD88) at the existing BNSF railroad crossing. The crossing is estimated to be approximately 119 river miles above the mouth of the Pend Oreille River which is about 29-river miles upstream of the Albeni Falls Dam.

The existing rail bridge is approximately 4,764-ft long and has 89 spans ranging in length from 23-ft to approximately 102-ft which includes a turning span for navigation. The turning span is inoperable. 74 of the spans are 52-ft long. Portions of the existing bridge piers and structure have been rehabilitated over time so the pier shapes and low chords vary from one abutment to the other. Record drawings of the existing bridge are included in Attachment E.

The proposed bridge at milepost 3.9 will carry a new BNSF track over Lake Pend Oreille. The track and bridge will be located 50-ft on center downsteam (west) of the existing bridge. The structure will be 4,874-ft long and consists of 48 precast concrete spans. The majority of the spans use 73-inch deep x 104-ft long I-girders with a cast-in-place concrete deck. The foundation will utilize precast concrete pier caps supported on 6 piles that are 36 inch diameter steel pipes which are battered and driven approximately 140-ft below the mudline. The upper section of the piles will be braced with an arrangement of steel channels.

The Highway 95 roadway bridge, located approximately 6,800-ft downstream (west) of the existing Bridge 3.9 structure, was included is the HEC-RAS model for this study utilizing record drawings of portions of the structure provided by the Idaho Transportation Department. The Highway 95 Bridge is approximately 5,896-ft long and has 180 spans, most of which are 35-ft long.

The Bonner County FIS states that a Lake Pend Oreille stage-frequency curve was determined by a graphical frequency analysis of maximum annual lake stages plotted on an arithmetic probability grid with median plotting positions. The results of this analysis are shown in Table 4 of the FEMA Flood Insurance Study (FIS), which reports that the drainage area is 22,900 square miles, the 10-year flood water surface elevation is 2,067.9-ft and the 100-year is 2,073.7-ft, both elevations in NAVD88.

All survey data, which was used to create the hydraulic models, was collected using the North American Vertical Datum of 1988 (NAVD88). The FEMA FIRM and relevant excerpts from the FEMA FIS are provided in Attachment C.

HYDROLOGY

The Bonner County FEMA FIS, dated July 7, 2014, has established effective regulatory discharges at Albeni Falls Dam. The FEMA FIS establishes the regulatory flow rate for the 100-year discharge at the USACE's Albeni Falls Dam as 159,000-cfs. The hydroelectric dam is located over 29 river miles downstream of Bridge 3.9. Discharges have not been established by FEMA further upstream on Pend Oreille River or on Lake Pend Oreille. Table 1 is a summary of the FEMA discharges from the FIS.

Table 1 - Summary of Discharges for Pend Oreille River, Bonner County FEMA Flood Insurance Study, July 7, 2014

	Drainage Area (sq-mi)	10-Percent Annual-Chance (10YR)	2-Percent Annual-Chance (50YR)	1-Percent Annual-Chance (100YR)	0.2-Percent Annual-Chance (500YR)
Albeni Falls Dam	24,200	126,000	151,000	159,000	174,000

Preliminary Draft for Agency Review

According to the USACE, flood stage for Lake Pend Oreille is 2,063.5-ft (NGVD29) as measured at the Hope gage. The Pend Oreille River has a flood flow designated by the National Weather Service as measured by downstream releases of the dam. The flood flow was revised downward in 2014 from 100,000 to 95,000-cfs. The full powerhouse discharge capacity of Albeni Falls Dam depends on lake levels but is estimated to be between 25,000-32,000-cfs. Upstream of the dam, near Dover, there is a natural restriction in the river which controls the amount of flow that can be passed downstream. The following is from a USACE factsheet on the dam which describes dam operations relative to elevations in Lake Pend Oreille (cited elevations are NGVD29):

> *Approximately 9,256 acres of flowage easements were acquired on private lands around the lake for the purpose of accommodating wave action, erosion and ground water effects that might occur as a result of the operation of the project. Easements were acquired at fair market value and allow for permanent flooding up to elevation 2,062.5 feet and intermittent flooding up to elevation 2,067.5 feet. Easement boundaries are loosely tied to the 2067.5 level, but each easement has its own legal description. Additional easements were acquired that restrict habitation below 2,067.5 feet in locations where the original easements were determined to be inadequate. There was a recognition in the mid-90's that easements which contain a no-habitation restriction were too strict for the Pend Oreille River above the dam and below the Long Bridge and consequently the Corps was authorized to release this restriction for dwellings with a first floor elevation above 2,065 feet. Such a release includes language that will release the Corps from liability for flood events that occur where flood waters exceed the 2,065 feet elevation.*

Additional operational data from the USACE on Albeni Falls Dam and the USGS gage at Hope can be found in Attachment D.

HYDRAULICS

The US Army Corps of Engineers' HEC-RAS v.5.0.6 program was used to model the Pend Oreille River, Lake Pend Oreille, the existing Highway 95 roadway bridge and Bridge 3.9. The model extends 43,500-ft downstream and 33,300-ft upstream of the existing Bridge 3.9. Hydrographic survey of the lake at the bridge site combined with photos and available record construction drawings were used to define the existing structure and the lake bed at the existing bridge. A proposed conditions model was developed to analyze potential impacts from the construction of a parallel bridge crossing upstream of the existing . Since discharges at Bridge 3.9 have not been established, a range of discharges from 10,000-cfs to 159,000-cfs (FEMA 100-year discharge at Albini Falls Dam) was used to assess both existing and proposed hydraulic conditions at Bridge 3.9. A normal depth boundary slope of 0.00005-ft/ft used to estimate the downstream boundary condition utilizing an iterative approach. Since the starting water surface is 43,000-ft downstream of Bridge 3.9, the calculated water surfaces at the existing and proposed bridge structure are not sensitive to variability in the downstream boundary condition.

Per HEC-RAS Hydraulic Reference Manual Version 5.0, the existing and proposed bridge were modeled as a combined bridge deck due to their proximity. The existing bridge was modeled as the downstream face of the hydraulic structure and the proposed bridge was modeled as the upstream face of the deck. The structures were sufficiently far apart that they were assumed not to impact the hydraulic opening of the parallel bridge face. The width of the bridge, in the

Preliminary Draft for Agency Review

direction of flow, is the combined length from the upstream face of the existing bridge to the downstream face of the proposed bridge. This distance was estimated to be 65-ft and includes the gap in between the bridges.

The proposed structure provides a wider hydraulic opening than the existing bridge. The proposed bridge piers are generally aligned with the existing piers. However, the proposed piers have generally twice the span length as the existing structure. Therefore, the proposed bridge provides a larger effective hydraulic opening when compared to the existing bridge structure. A hydraulic cross-section location map is provided in Attachment G. Proposed (99%) bridge plans are provided in Attachment F.

FLOODPLAIN PERMITTING

The hydraulic model investigation indicates that the proposed rail bridge creates less than 0.0-ft increase in water surfaces ranging from 10,000-cfs to 159,000-cfs. Based on the results of the hydraulic investigation, the proposed structure meets the intent of FEMA "No-Rise" Certification criteria. A summary of HEC-RAS model output comparison between the existing and proposed conditions is provided in Attachment H.

List of Attachments:

Attachment A – Project Location Map
Attachment B – Site Photos
Attachment C – FEMA FIS and FIRM
Attachment D – USACE Data & Gage Data
Attachment E – Existing Bridge Plans
Attachment F – Proposed 95% Bridge 3.9 Plans
Attachment G – Hydraulic Cross-Section Map
Attachment H – HEC-RAS Output

Preliminary Draft for Agency Review

Preliminary Draft for Agency Review

Attachment A – Project Location Map

USCG0010183/27

Sand Creek

Lake Pend Oreille

Sandpoint

Project Location
(BNSF Rail - Bridge 3.9)

Preliminary Draft for Agency Review

*Coordinate System: NAD 1983 HARN StatePlane Idaho West FIPS 1103 Feet

0 1,500 3,000 Feet

1 in = 3,000 ft

N W E S

HANSON

Hanson Professional Services Inc.

Project Location Map

BNSF Railway Company
Bridge 3.9 Over Lake Pend Oreille
Sandpoint, Idaho

Job Number: 14R0057

I:\14jobs\14R0057\CAD\GIS\Projects\Project Location Map.mxd

Preliminary Draft for Agency Review

Attachment B – Site Photos

Photograph 1 – Aerial View of Existing Bridge on Lake Pend Oreille

Photograph 2 – Aerial View of Existing Bridge on Lake Pend Oreille

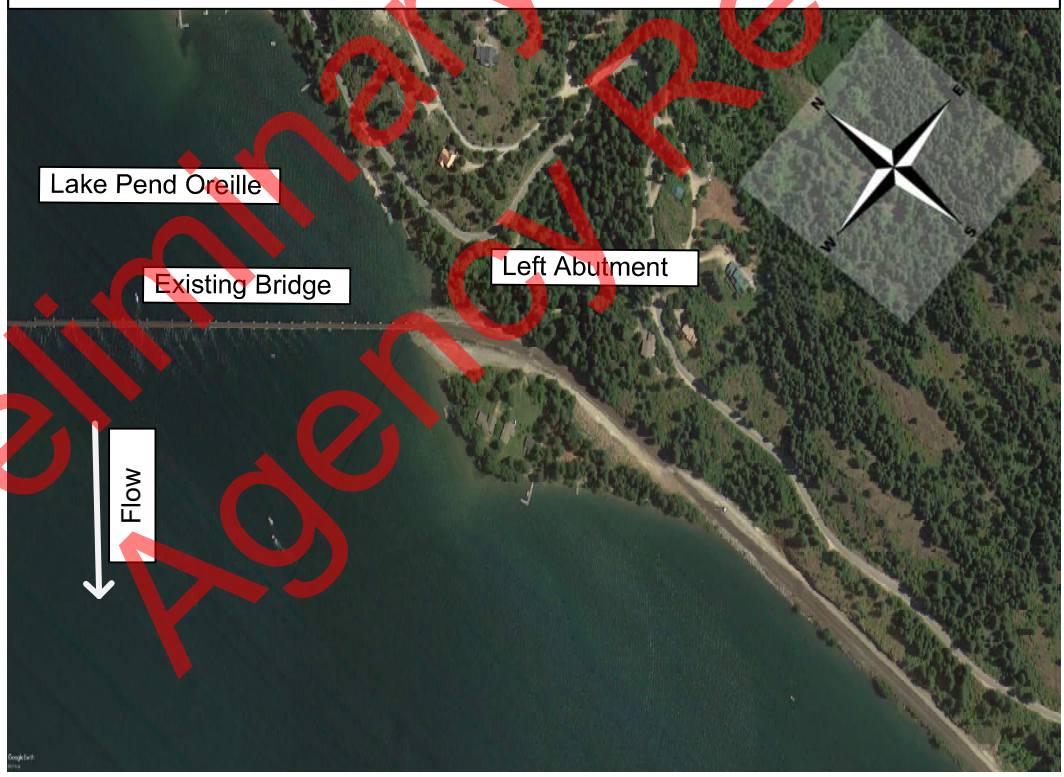

Preliminary Draft for Agency Review

© Copyright Hanson Professional Services Inc. 2018

HANSON
HANSON PROFESSIONAL SERVICES INC.

Photographs

BNSF Railway Company
Bridge 3.9 Over Sand Creek
Sandpoint, Idaho

Hanson No. 14R0057

I:\14jobs\14R0057\Admin\14-Reports\H&H\Lake Pend Oreille\Attachment B - Site Photos\Photos\Bridge3-9_Photographs.vsd

Photograph 3 – Right Abutment of Existing Bridge on Lake Pend Oreille looking Upstream (east)

Photograph 4 – Left Abutment of Existing Bridge on Lake Pend Oreille looking Upstream (northwest)

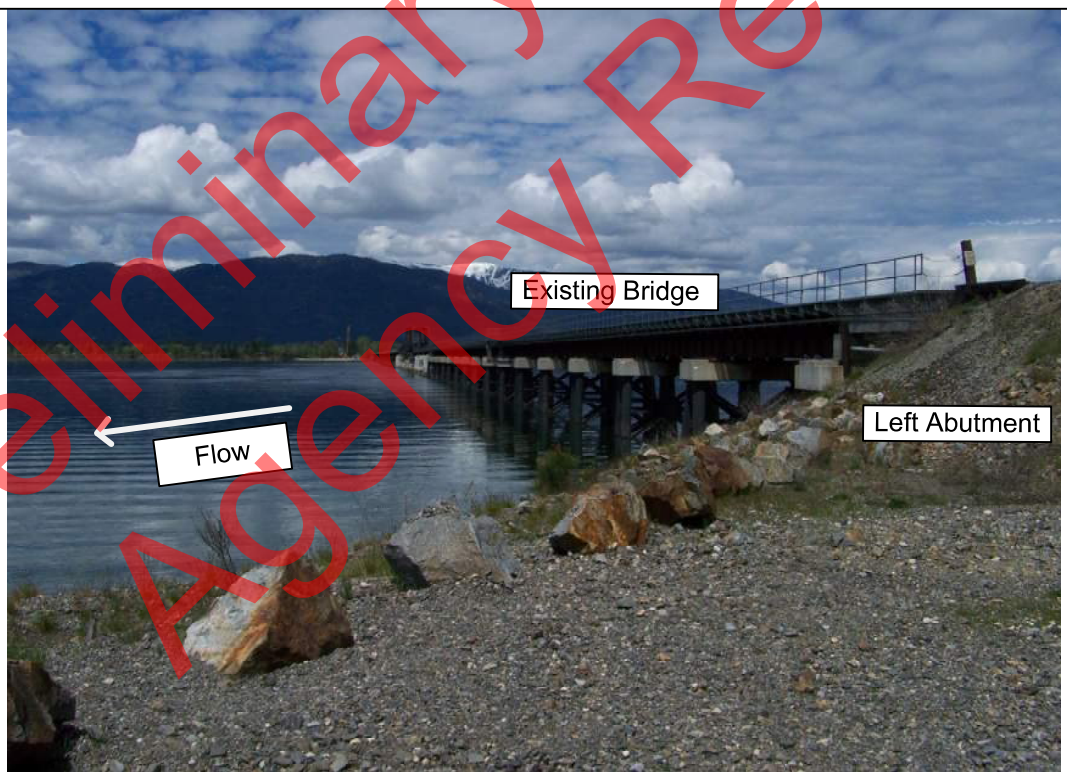

Preliminary Draft for Agency Review

© Copyright Hanson Professional Services Inc. 2018

HANSON
HANSON PROFESSIONAL SERVICES INC.

Photographs

BNSF Railway Company
Bridge 3.9 Over Sand Creek
Sandpoint, Idaho

I:\14jobs\14R0057\Admin\14-Reports\H&H\Lake Pend Oreille\Attachment B - Site Photos\Photos\Bridge3-9_Photographs.vsd

Photograph 5 – Right Abutment of Existing Bridge on Lake Pend Oreille looking Downstream (south)

Photograph 6 – Right Abutment of Existing Bridge on Lake Pend Oreille looking Downstream (south)

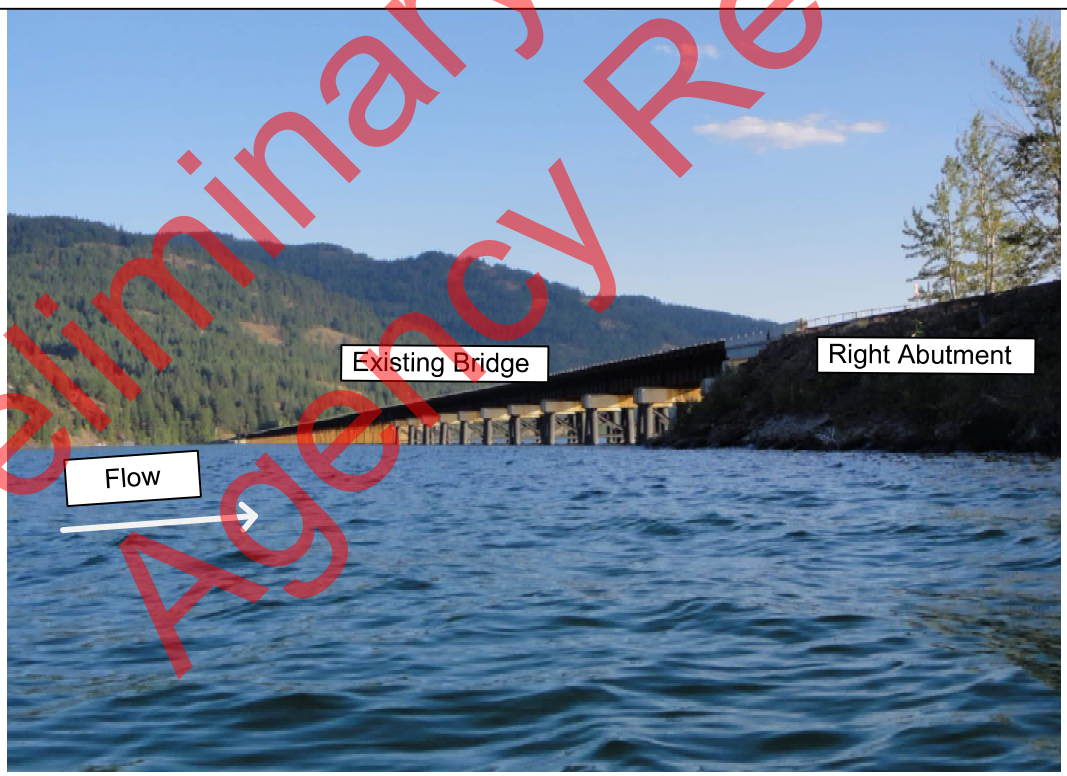

Preliminary Draft for Agency Review

© Copyright Hanson Professional Services Inc. 2018

HANSON
HANSON PROFESSIONAL SERVICES INC.

Photographs

BNSF Railway Company
Bridge 3.9 Over Sand Creek
Sandpoint, Idaho

I:\14jobs\14R0057\Admin\14-Reports\H&H\Lake Pend Oreille\Attachment B - Site Photos\Photos\Bridge3-9_Photographs.vsd

Photograph 7 – Right Abutment of Existing Bridge on Lake Pend Oreille looking Upstream (east)

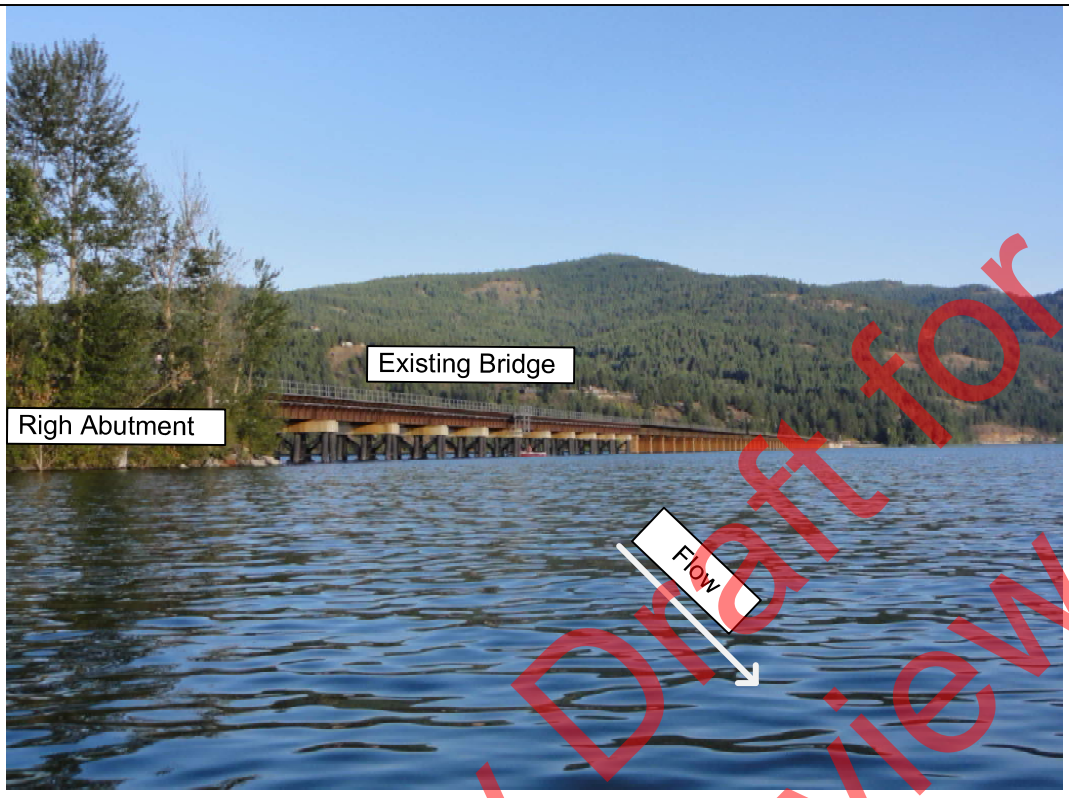

Photograph 8 – Existing Bridge Truss on Lake Pend Oreille looking Upstream (east)

Preliminary Draft for Agency Review

© Copyright Hanson Professional Services Inc. 2018

HANSON
HANSON PROFESSIONAL SERVICES INC.

Photographs

BNSF Railway Company
Bridge 3.9 Over Sand Creek
Sandpoint, Idaho

I:\14jobs\14R0057\Admin\14-Reports\H&H\Lake Pend Oreille\Attachment B - Site Photos\Photos\Bridge3-9_Photographs.vsd

Photograph 9 – Existing Bridge Concrete Piers on Lake Pend Oreille

Photograph 10 – Existing Bridge Battered Piers on Lake Pend Oreille

Preliminary Draft for Agency Review

© Copyright Hanson Professional Services Inc. 2018

HANSON
HANSON PROFESSIONAL SERVICES INC.

Photographs

BNSF Railway Company
Bridge 3.9 Over Sand Creek
Sandpoint, Idaho

I:\14jobs\14R0057\Admin\14-Reports\H&H\Lake Pend Oreille\Attachment B - Site Photos\Photos\Bridge3-9_Photographs.vsd

Preliminary Draft for Agency Review

Attachment C – FEMA FIS and FIRM

MAP SCALE 1" = 500'

250 0 500 1000 FEET

METERS

NFIP

NATIONAL FLOOD INSURANCE PROGRAM

PANEL 0718E

FIRM

FLOOD INSURANCE RATE MAP

BONNER COUNTY, IDAHO

AND INCORPORATED AREAS

PANEL 718 OF 1475

(SEE MAP INDEX FOR FIRM PANEL LAYOUT)

CONTAINS:

COMMUNITY	NUMBER	PANEL	SUFFIX
BONNER COUNTY	160206	0718	E
PONDERAY, CITY OF	160150	0718	E
SANDPOINT, CITY OF	160025	0718	E

Notice to User: The **Map Number** shown below should be used when placing map orders; the **Community Number** shown above should be used on insurance applications for the subject community.

MAP NUMBER
16017C0718E
EFFECTIVE DATE
NOVEMBER 18, 2009

Federal Emergency Management Agency

This is an official copy of a portion of the above referenced flood map. It was extracted using F-MIT On-Line. This map does not reflect changes or amendments which may have been made subsequent to the date on the title block. For the latest product information about National Flood Insurance Program flood maps check the FEMA Flood Map Store at www.msc.fema.gov

USCG00102263/27

USCG0010273/27

FLOOD INSURANCE STUDY

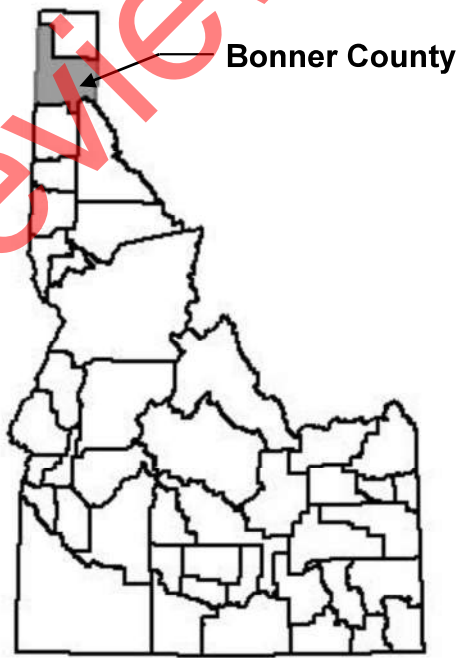

BONNER COUNTY, IDAHO AND INCORPORATED AREAS

COMMUNITY NAME	COMMUNITY NUMBER
BONNER COUNTY, UNINCORPORATED AREAS	160206
CLARK FORK, CITY OF	160132
DOVER, CITY OF	160006
EAST HOPE, CITY OF	160237
HOPE, CITY OF	160238
*KOOTENAI, CITY OF	160052
OLDTOWN, CITY OF	160073
PONDERAY, CITY OF	160150
PRIEST RIVER, CITY OF	160026
SANDPOINT, CITY OF	160025

*No Special Flood Hazard Areas Identified

Preliminary Draft for Agency Review

REVISED
July 7, 2014

Federal Emergency Management Agency

Flood Insurance Study Number
16017CV000B

City of Priest River

The City of Priest River is located at the confluence of Pend Oreille River (Lake Pend Oreille) and Priest River, in western Bonner County. The Idaho-Washington State line is 7 miles to the west, and Spokane, Washington, is 55 miles to the southwest. Priest River is surrounded by unincorporated areas of Bonner County.

Priest River was incorporated in 1949 and has a population of 1,754 (Reference 6). The city encompasses approximately 1.6 square miles. The major industry in the area is logging. The current and proposed development in the flood plain is moderate.

Priest River, which drains the Selkirk Mountains (elevations to 7,300 feet), flows into and out of Priest Lake to eventually join Pend Oreille River at the City of Priest River. Priest River drainage area at the mouth is 907 square miles.

City of Sandpoint

The City of Sandpoint is located on Lake Pend Oreille at the confluence of Lake Pend Oreille and Sand Creek, in central Bonner County. Sandpoint is surrounded by the unincorporated areas of Bonner County.

The Idaho-Washington State line is 29 miles to the west; Spokane, Washington, is 84 miles to the southwest; and the City of Coeur d'Alene, Idaho, is 46 miles to the south.

Sandpoint was incorporated in 1902 and has a population of 6,835 (Reference 6). The city encompasses approximately 4.7 square miles. The major industries in the area are logging and tourism. The current and proposed development in the flood plain is sparse.

Sand Creek originates north of the City of Sandpoint and drains an area of 38.5 square miles.

The City of Sandpoint is situated on relatively flat land, with mountainous terrain to the west and northwest, and Lake Pend Oreille to the east and south.

2.3 Principal Flood Problems

Bonner County is susceptible to periodic flooding along the streams due to overflow, particularly during rapid spring snowmelt. The flood season generally begins in April, peaks in May or June, and subsides in July. Intermittent flooding often occurs after hot weather or heavy rains, but snowmelt runoff is generally slow and steady (Reference 5).

Major river drainages are the Priest and Clark Fork-Pend Oreille River basins. Pack River is a tributary of Clark Fork-Pend Oreille River. Both major basins contain large lakes: Priest Lake and Pend Oreille Lake.

Priest Lake water levels area controlled and operated for hydropower generation; however, there is no flood-control space allocated in the natural lake (Reference 2). Lake Pend Oreille has been controlled by Albeni Falls Dam near Newport since 1952. Major flood damages around the lake in an 18-year frequency flood average $67,000. Damage occurs to 20,350 acres at the Clark Fork Delta, Pack River Delta, Oden Bay, Sandpoint, and Morton (Reference 3).

The lowlands along Clark Fork-Pend Oreille River have flooded in 1894, 1933, 1948, 1956, 1969, and 1974 in Bonner County. The highest flooding occurred in 1894 with damages estimated at $6.8 million, 1967 prices and development; discharges measured at the state line at Newport, Washington, was 200,000 cubic feet per second (cfs). In June 1948, discharge

Preliminary Draft for Agency Review

was 162,000 cfs, and levees were overtopped. Sandpoint received excessive damage in the 1974 flooding. Damage in previous flooding has been largely sustained by grain crops and pastureland, with some low-lying roads and buildings affected around the lakes (Reference 3).

In the Pack River basin, streamflow is measured 10 miles north of Sandpoint. Average recorded discharge is 330 cfs, with a maximum discharge of 4,370 cfs on May 30, 1969. In this flood, the peak flow resulted from heavy rains, which, in turn, caused a sudden surge in the river, already high from snowmelt runoff. A newspaper account reported a cloudburst rain in Bonner County which washed out the Pack River road above Hellroaring Creek. Pack River cut a new channel around the upper bridge during the 1969 flood.

In 1974, area newspapers reported the January flooding occurring near Sandpoint. Of the schools in Bonner County School District, 82 were closed, and the governor proclaimed five northern Idaho counties to be disaster areas, including Bonner County:

> … flooding continued throughout Bonner County today forcing several road closures and evacuation, however, no injuries were reported … Residents in the Pack River flats area of Rapid Lightning Creek were forced to evacuate.
>
> Local authorities had expressed concern yesterday that the city's water reservoir dam would give way … Five men worked for over two hours removing ice from the dam yesterday, (according to Jack Leckner, superintendent of public works) … An eight-inch water main that runs across Sand Creek on Popcycle Road was washed out.
>
> In Sandpoint, water has caused excessive damage to several streets, Leckner stated, all of which will require repair work when the water recedes. (Reference 7)

The next day, the newspaper reported:

> Two feet of water was running over the dam in Strong Creek today, Phillips said…
>
> Other reports received by the Sheriff's Office as of early today are:
>
> - Highway 200 at Laclede closed.
> - Talache Road washed out and closed. Travel to Priest River via Dufort
> - Baldy Road, washouts.
> - Pleasant View Road, washouts.
> - Dufort Road, closed to all truck traffic.
> - Colburn water works is out.
> - Bottle Bay Road washed out.
> - Cocolalla Lake is up to eight inches.
> - The old city pier just east of here is also partially washed away. (Reference 7).

In another newspaper on the same day, high water, icy road conditions, and continuance of school closures were reported:

> The level of Lake Pend Oreille was predicted to rise during the next several

Preliminary Draft for Agency Review

> days to about elevation 2,056 … Inflow was up to 27,000 cubic second feet Monday with the possibility of inflow may reach as high was 50,000 cfs before the end of the week…
>
> The Sheriff's department reported Tuesday that floodwaters on Rapid Lightning Creek has completely destroyed one home and damaged the front porch and garage of a second dwelling…
>
> A portion of the U.S. 95 between Sandpoint and Colburn was covered by more than two feet of water, with almost one-third of the highway washed away. The east end of the Bronx cutoff was completely washed away by a rampaging Sand Creek…
>
> The Pack River Road was reportedly completely washed out above Edna's Tavern … (Reference 8).

The storm continued, and on January 18, 1974, State and Federal action was reported in the area. The Governor sought national disaster status and the U.S. Army Corps of Engineers allowed additional storage in Lake Pend Oreille:

> The Corps of Engineers announced today water will be stored in Pend Oreille Lake above the normal maximum winter level of elevation 2,060 feet above sea level … it will probably go another two feet.
>
> Officials there are making preparations now to spill water if that becomes necessary …. (Reference 7).

By January 22, newspaper reports began estimating damage and telling of flood victims:

> Returning to the most awful mess imaginable …
>
> Estimates released last week indicate that at least $3 million in damage was done to county roads during the flooding. The City of Sandpoint has estimated its damage at nearly $60,000 (Reference 7).

<u>City of Clark Fork</u>

The City of Clark Fork is located on flood-prone land which has its flooding potential from Clark Fork, Lightning Creek, and Mosquito Creek. The major cause of flooding is rainfall on snow with subsequent melting.

Two severe floods from Clark Fork occurred in 1894 and, most recently, in 1948. The flood of June 1948 had a discharge of 153,000 cubic feet per second (cfs). Both floods affected only the southern-most areas of the city.

The most recent flood from Lightning Creek was in December 1921, and affected only the southwestern part of the city.

There are no flood records for Mosquito Creek.
In January 1974, major flows were experienced in all tributaries near the City of Clark Fork. Lightning Creek carried large amounts of silt and debris, but no major flooding of the city resulted.

Preliminary Draft for Agency Review

Fork at Cabinet Gorge Dam. These structures are mainly used for power production purposes. They also enable Albeni Falls Dam to control the annual minimum lake level to an elevation higher than would be experienced under natural conditions and to reduce the maximum lake level for floods with peaks between 80,000 and 220,000 cfs. Lake levels are also affected by regulation of the upstream reservoir on South Fork Flathead River at Hungry Horse and by storage in Flathead Lake, both in Montana.

Dams on upper Clark Fork, particularly Flathead Tributary, decrease the chances of future flooding from Clark Fork. The physical proximity of Clark Fork also protects the city from 1-percent annual chance flood inundation. However, the greater part of the City of Clark Fork is affected by the 0.2-percent annual chance flows from Clark Fork, Lightning Creek, and Mosquito Creek.

For recreation purposes, the elevation of Priest Lake is controlled by a small dam during the summer. Water is later released for downstream power. During high flow conditions, the control for the lake outlet passes from this dam to natural backwater from the river channel leaving the lake.

A levee was constructed in 1959 by the U.S. Army Corps of Engineers on the east bank of Lightning Creek from its mouth to approximately 2 miles upstream. This levee system is currently undergoing accreditation. During the interim, the levees are considered to be provisionally accredited according to the agreement between FEMA and the City of Clark Fork signed August 2, 2007.

Nonstructural measures of flood protection are also being used to aid in the prevention of future flood damage. These are in the form of land-use regulations adopted from the Code of Federal regulations which control building within areas that have a high risk of flooding (Reference 9).

The cities of Priest River and Sand Point use zoning regulations, enforced by Bonner County, which restricted building within the 1-percent annual chance flood zone. These regulations adhere to the standards and requirements set forth by the Federal Emergency Management Agency.

There are no known physical flood protection measures in the cities of Dover, East Hope, Hope, Oldtown, and Ponderay.

3.0 ENGINEERING METHODS

For the flooding sources studied by detailed methods in the community, standard hydrologic and hydraulic study methods were used to determine the flood-hazard data required for this study. Flood events of a magnitude that are expected to be equaled or exceeded once on the average during any 10-, 50-, 100-, or 500-year period (recurrence interval) have been selected as having special significance for floodplain management and for flood insurance rates. These events, commonly termed the 10-, 50-, 100-, and 500-year floods, have a 10-, 2-, 1-, and 0.2-percent chance, respectively, of being equaled or exceeded during any year. Although the recurrence interval represents the long-term, average period between floods of a specific magnitude, rare floods could occur at short intervals or even within the same year. The risk of experiencing a rare flood increases when periods greater than 1 year are considered. For example, the risk of having a flood that equals or exceeds the 100-year flood (1-percent chance of annual exceedence) in any 50-year period is approximately 40 percent (4 in 10); for any 90-year period, the risk increases to approximately 60

Preliminary Draft for Agency Review

percent (6 in 10). The analyses reported herein reflect flooding potentials based on conditions existing in the community at the time of completion of this study. Maps and flood elevations will be amended periodically to reflect future changes.

3.1 Hydrologic Analyses

Hydrologic analyses were carried out to establish peak discharge-frequency relationships for each flooding source studied by detailed methods affecting the community.

A regionalized frequency analysis was conducted on annual peak-flow data obtained from 11 stream-gaging stations located throughout northern Idaho. The gages range in drainage area from 1.1 to 1,220 square miles, with length of record ranging from 9 to 55 years (References 4, 10, 11, 12, and 13). A log-Pearson Type III frequency analysis was made on these known discharges using procedures as outlined by the U.S. Water Resources Council (Reference 14). Historical accounts of flooding and the actual computed gage skew coefficient (Reference 14) of -0.30 was too low for application in this region. Computed gage skews were used with additional consideration given to length of gage recorded and drainage basin characteristics.

With values from the above analysis, unit runoff versus drainage area curves were developed. These curves were used for estimating peak flow values for Grouse Creek, Lightning Creek, Mosquito Creek, Pack River, Rapid Lightning Creek, Sand Creek, Sand Creek North, and Spring Creek.

Gaging stations on Clark Fork and Priest River were the primary source of information used for defining peak discharge-frequency relationships for the rivers. The gages have been in continuous operation since 1928 and 1929, respectively (References 10, 11, 12 and 13).

Peak discharges for the required recurrence intervals were obtained from a log-Pearson Type III frequency analysis of annual peak flow data adjusted as described using "Guidelines for Determining Flood Flow Frequency" (Reference 14).

Due to the regulation of Priest River flows by Priest Lake and unique runoff characteristics of Priest River, several methods of analysis were utilized in calculating flows in the two upstream detailed study areas. A log-Pearson Type III frequency analysis was conducted on all known existing flow records for four stream gages located in the Priest River drainage area. The drainage areas vary from 10 to 966 square miles, with length of records from 18 to 50 years. With this data, the timing of peak flows and producing areas for peak flows were analyzed and found to correlate for the drainage area above Coolin (drainage area 624 square miles) and gage for Priest River at Priest River (drainage area 966 square miles). Peak flows for the required specific frequency floods were determined at the study reaches by a unit runoff basis combined with values from the frequency analyses for the gage located on Priest River at Coolin.

For Mosquito Creek downstream of the Burlington Northern Railroad, peak flows were reduced due to hydrograph routing caused by the large railroad embankment and small culvert opening. Inflow hydrographs used for routing calculations for the 10, 2-, 1-, and 0.2-percent-annual-chance floods were obtained from procedures as outlined for lake analyses. The U.S. Army Corps of Engineers HEC-1 computer program was used for all routing calculations (Reference 15). Backwater from the Burlington Northern Railroad is shown on the water-surface profiles. These water-surface elevations were taken from the routing calculations and used in the HEC-2 backwater analyses (Section 3.2).

Preliminary Draft for Agency Review

The Pend Oreille Lake stage-frequency curve was determined by a graphical frequency analysis of maximum annual lake stages plotted on an arithmetic probability grid with median plotting positions. Elevations for floods of the selected recurrence intervals on Lake Pend Oreille are shown in Table 4.
Inflow-outflow routing calculations were used to define peak elevation data for the 10- and 1-percent-annual-chance floods on Cocolalla and Kelso Lakes. Inflow hydrographs for these calculations were taken from recorded high-water events on nearby gaging stations. Several hydrographs from various recorded floods were analyzed for unit volume of runoff, instantaneous peak flow, and shape.

Statistically, during the January 1974 flood, several of the stations analyzed recorded 1-percent-annual-chance peak flows. After the analysis of unit runoff, it was assumed the volume associated with these peaks was also a 1-percent-annual-chance flood event.

The analysis of hydrograph shape revealed the most valid hydrograph to use in routing calculations for the 1-percent-annual-chance flood came from the gage on Coeur d'Alene River located near Prichard. The recorded 1974 hydrograph was linearly adjusted to reflect drainage area differences between each lake studied and Coeur d'Alene River at Prichard drainage area. Instantaneous peak flows for each hydrograph were taken from the regional curve developed for the various drainage areas studied by detailed methods.

The hydrograph for routing calculations to determine the 10-percent-annual-chance event was taken from the March 1950 flood recorded on Hayden Creek. This flood produced statistically a 10-percent-annual-chance peak for the gage located below North Fork Hayden Creek near Hayden Lake. Hydrographs were again adjusted linearly to reflect drainage area differences, and the 10-percent-annual-chance peak flow for each hydrograph was taken from the regional curve.

The HEC-1 computer program Flood Hydrograph Package was used for all calculations of inflow-outflow parameters (Reference 15).

Starting lake elevations used in the HEC-1 routing calculations were based on information obtained during field reconnaissance and interviews with local residents in the area. Computed 1-percent-annual-chance lake elevations were checked for reasonableness with high-water marks obtained during the 1974 flood. Elevations for floods of the selected recurrence intervals on all lakes studied by detailed methods are shown in Table 4.

The analyses reported herein reflect the stillwater elevations due to wind setup effects, but do not include additional surcharge elevation from wave crest height and wave runup. These surcharge elevations were considered only for Lake Pend Oreille and are explained in detail in Section 3.2 of this study.

It was agreed between the Federal Emergency Management Agency and the study contractor to consider wave height analysis for Lake Pend Oreille. Significant wave height was calculated using procedures as outlined in ETL-1110-2-221 (References 16 and 17). Inputs for the calculations include wind direction, duration, and speed along with reservoir shape and size. The calculated wave height was added as a surcharge to the 1-percent-annual-chance stillwater lake elevation. No wave runup analysis was conducted.

Peak discharge-drainage area relationships for each stream studied in detail are shown in Table 5, "Summary of Discharges".

Preliminary Draft for Agency Review

Table 4. Summary of Lake Elevations

Flooding Source and Location	Drainage Area (Square Miles)	Peak Elevations (Feet NAVD) 10-Percent-Annual-Chance	2-Percent-Annual-Chance	1-Percent-Annual-Chance	0.2-Percent-Annual-Chance
Cocolalla	58.1	2,212.7	___[1]	2,215.8	___[1]
Kelso	10.7	2,157.6	___[1]	2,158.0	___[1]
Pend Oreille	22,900	2,067.9	___[1]	2,073.7	___[1]
Priest Lake	572	2444.5	2445.3	2445.5	2446.1

[1]Data Not Available

Preliminary Draft for Agency Review

USCG0010353/27

Preliminary Draft for Agency Review

Table 5. Summary of Discharges

Flooding Source and Location	Drainage Area (Square Miles)	Peak Discharges (Cubic Feet per Second) 10-Percent-Annual-Chance	2-Percent-Annual-Chance	1-Percent-Annual-Chance	0.2-Percent-Annual-Chance
Clark Fork					
Below Rapid Lightning Creek	22,073	142,250	____[2]	148,000	221,650
Grouse Creek					
At mouth	60.0	2,150	3,450	4,250	6,200
At Colburn-Creek	55.6	2,000	3,200	3,950	5,750
Lightning Creek					
At mouth	122	4,100	6,850	8,400	12,500
Above Spring Creek	110	3,700	6,175	7,600	11,275
Above Cascade Creek	103	3,500	5,800	7,100	10,550
Mosquito Creek					
At mouth	7.2[1]	350	425	450	550
Above Burlington Northern RR	7.2	400	550	675	950
Pack River					
At State Route 200	291	9,500	16,000	19,500	29,500
Above Trout Creek	278	9,000	15,250	18,750	28,250
Above Rapid Lightning Creek	228	7,500	12,500	15,500	23,250
Above Gold Creek	214	7,000	11,750	14,500	21,750
Above Grouse Creek	147	4,900	8,200	10,000	15,000
Above Sand Creek	127	4,250	7,100	8,700	13,000
At U.S. Geological Survey Gage Station near Colburn	124	4,200	7,000	8,500	12,750
Above Colburn Creek	103	3,500	5,800	7,150	10,500
Above Carribou Creek	77	2,700	4,400	5,400	8,000
Above Hell Roaring Creek	61	2,200	3,500	4,300	6,300
Pend Oreille River					
At Albeni Falls Dam	24,200	126,000	151,000	159,000	174,000
At Newport, Washington	____[2]	____[2]	____[2]	154,000	____[2]

3.2 Hydraulic Analyses

Analyses of the hydraulic characteristics of flooding from the sources studied were carried out to provide estimates of the elevations of floods of the selected recurrence intervals. Users should be aware that flood elevations shown on the FIRM represent rounded whole-foot elevations and may not exactly reflect the elevations shown on the Flood Profiles or in the Floodway Data tables in the FIS report. Flood elevations shown on the FIRM are primarily intended for flood insurance rating purposes. For construction and/or floodplain management purposes, users are cautioned to use the flood elevation data presented in this FIS in conjunction with the data shown on the FIRM.

Water-surface elevations were computed for the 10-, 2-, 1-, and 0.2-percent-annual-chance floods through use of the U.S. Army Corps of Engineers HEC-2 standard step-backwater computer program (Reference 18) for all detailed study areas.

Cross section data for Pack River below Rapid Lightning Creek Road were obtained from a previous report published by the U.S. Army Corps of Engineers (Reference 5). The sections were field surveyed.

Cross section data for backwater analysis of all other streams studied by detailed methods were digitized using aerial photography dated November 1977 and September 1981 (Reference 19). The below-water sections were field measured. All bridges, culverts, and other hydraulic structures were surveyed in order to obtain elevation data and structural geometry.

Cross sections for all streams studied by detailed methods were located at close intervals above and below bridges, culverts, and other hydraulic structures in order to compute the significant backwater caused by these structures.

Locations of selected cross sections used in the hydraulic analyses are shown on the Flood Profiles (Exhibit 1). For stream segments for which a floodway was computed (Section 4.2), selected cross section locations are also shown on the FIRM (Exhibit 2).

Flood profiles were drawn showing computed water-surface elevations to an accuracy of 0.5 foot for floods of the selected recurrence intervals (Exhibit 1). In Clark Fork backwater from Burlington Northern Railroad is shown on the water-surface profiles (Exhibit 1). These water-surface elevations were taken from the routing calculations and used in the HEC-2 backwater analysis (Reference 18).

The computed water-surface elevations for Priest River in the area of the City of Priest River and Sand Creek in the City of Sandpoint are considerably lower than those elevations determined for Lake Pend Oreille. Therefore, the flood profiles (Exhibit 1) for this study show the entire reach for Priest River, within the corporate limits, inundated with backwater from Lake Pend Oreille.

Roughness characteristics (Manning's "n") of the channel and flood plain areas used in the backwater computations were estimated during field reconnaissance. Ranges of values for streams are summarized in Table 6.

Preliminary Draft for Agency Review

Table 6. Roughness Coefficients - Range of Manning's "n"

	Channel	Overbank Flood Plain
Clark Fork	0.031	0.060 to 0.120
Grouse Creek	0.055	0.070 to 0.140
Lightning Creek	0.048 to 0.070	0.080 to 0.250
Mosquito Creek	0.055 to 0.060	0.060 to 0.150
Pack River	0.048 to 0.055	0.085 to 0.175
Priest River	0.040 to 0.155	0.040 to 0.200
Rapid Lightning Creek	0.040 to 0.070	0.040 to 0.200
Sand Creek North	0.070 to 0.080	0.140 to 0.200
Sand Creek	0.045 to 0.065	0.045 to 0.200
Spring Creek	0.070 to 0.095	0.080 to 0.350

Starting water-surface elevations for all streams were calculated using slope-area methods. Backwater at confluences with larger river systems or lakes are shown at the most downstream reaches of the smaller tributary stream on the flood profiles.

The hydraulic analyses for this study were based on unobstructed flow. The flood elevations shown on the profiles are thus considered valid only if hydraulic structures remain unobstructed and do not fail.

Hydraulic analyses of the outlet structures for Cocalalla and Kelso Lakes were conducted in order to provide rating for outflow from the lakes. All structures were measured by field surveys.

It was agreed between the Federal Emergency Management Agency and the study contractor to consider wave height analyses for Lake Pend Oreille only. Significant wave height was calculated using procedures as outlined in ETL-1110-2-221 (References 16 and 17). Input for the calculations included wind direction, duration, and speed along with reservoir shape and size. The calculated wave height was added as a surcharge to the 1-percent-annual-chance stillwater lake elevation. No wave runup analysis was conducted. No analyses of wave height or runup were conducted for any of the additional lakes studied in Bonner County.

Streams and rivers, selected for study by approximate methods, were analyzed by some combination of these five criteria: (1) correlation considering size of drainage area, slope, vegetative cover, and hydraulic conditions with other streams studied by detailed methods within the region; (2) field reconnaissance and historical accounts using information provided by local residents familiar with flooded areas and boundaries during past flooding events; (3) correlation with the U.S. Geological Survey maps of flood-prone areas; (4) correlation with flood boundaries as outlined on the Special Flood Hazard Boundary Map for Bonner County (Reference 20); and (5) engineering judgment.

3.3 Vertical Datum

All FIS reports and FIRMs are referenced to a specific vertical datum. The vertical datum provides a starting point against which flood, ground, and structure elevations can be referenced and compared. Until recently, the standard vertical datum used for newly created or revised FIS reports and FIRMs was the National Geodetic Vertical Datum of 1929 (NGVD 29). With the completion of the North American Vertical Datum of 1988 (NAVD

Preliminary Draft for Agency Review

88), many FIS reports and FIRMs are now prepared using NAVD 88 as the referenced vertical datum.

To accurately convert flood elevations for the streams and rivers in Bonner County from the current NGVD 29 datum to the newer NAVD 88 datum, the following procedure was implemented. Locations at the upstream and downstream ends of each flooding source, as well as at an intermediate location between these two end points, were evaluated using the COE CORPSCON (Reference 21) vertical datum conversion software. At each of the three points CORPSCON calculated the difference between NGVD 29 and NAVD 88 elevations. These three conversion factors were averaged to develop and average conversion factor for each flooding source. The final NAVD 88 elevations reported herein were computed by adding the calculated average conversion factor to the existing NGVD 29 data. Table 7 shows the conversion factor for each stream studied in detail.

Flood elevations shown in this FIS report and on the FIRMs are referenced to NAVD 88. These flood elevations must be compared to structure and ground elevations referenced to the same vertical datum. For information regarding conversion between the NGVD and the NAVD, visit the National Geodetic Survey website at www.ngs.noaa.gov, or contact the National Geodetic Survey at the following address:

NGS Information Services
NOAA, N/NGS12
National Geodetic Survey
SSMC-3, #9202
1315 East-West Highway
Silver Spring, Maryland 20910-3282
(301) 713-3242
(301) 713-4172 (fax)

Table 7. Vertical Datum Conversion Factors

	Conversion from NGVD 29 to NAVD 88 (feet)			
Stream Name	Minimum Conversion	Maximum Conversion	Average Conversion[1]	Maximum Offset
Clark Fork River	3.86	3.90	3.88	0.02
Grouse Creek	3.86	3.87	3.86	0.01
Lightning Creek	3.88	3.98	3.91	0.07
Mosquito Creek	3.87	3.88	3.88	0.00
Pack River	3.88	3.89	3.89	0.01
Pend Oreille River	3.85	3.87	3.86	0.01
Lake Pend Oreille	3.86	3.87	3.87	0.01
Priest River	3.90	3.95	3.92	0.03
Rapid Lightning Creek	3.90	3.93	3.91	0.02
Sand Creek North	3.86	3.88	3.87	0.01
Sand Creek	3.88	3.90	3.89	0.01
Spring Creek	3.88	3.96	3.92	0.04

[1] Used to convert elevation data from NGVD 29 to NAVD 88.

Temporary vertical monuments are often established during the preparation of a flood hazard analysis for the purpose of establishing local vertical control. Although these monuments are not shown on the FIRM, they may be found in the Technical Support Data Notebook associated with the FIS report and the FIRMs for this community. Interested individuals

Preliminary Draft for Agency Review

FLOODING SOURCE		FLOODWAY			1-PERCENT-ANNUAL-CHANCE FLOOD WATER SURFACE ELEVATION			
CROSS SECTION	DISTANCE[1]	WIDTH (FEET)	SECTION AREA (SQ. FEET)	MEAN VELOCITY (FEET/SEC)	REGULATORY (FEET NAVD)	WITHOUT FLOODWAY (FEET NAVD)	WITH FLOODWAY (FEET NAVD)	INCREASE (FEET)
Pend Oreille River								
A	87	164	52,450	3.0	2,060.1	2,060.1	2,060.9	0.8
B	88	1,118	35,011	4.5	2,060.3	2,060.3	2,061.0	0.7
C	89	1,158	35,326	4.5	2,060.6	2,060.6	2,061.4	0.8
D	89	1,604	49,837	3.2	2,061.0	2,061.0	2,061.7	0.7
E	90	1,314	39,610	4.1	2,061.0	2,061.0	2,061.8	0.8
F	90	1,090	41,085	3.9	2,061.2	2,061.2	2,061.9	0.7

[1]Miles above mouth

Preliminary Draft for Agency Review

TABLE 8

FEDERAL EMERGENCY MANAGEMENT AGENCY

BONNER COUNTY, IDAHO

AND INCORPORATED AREAS

FLOODWAY DATA

PEND OREILLE RIVER

USCG0010393/27

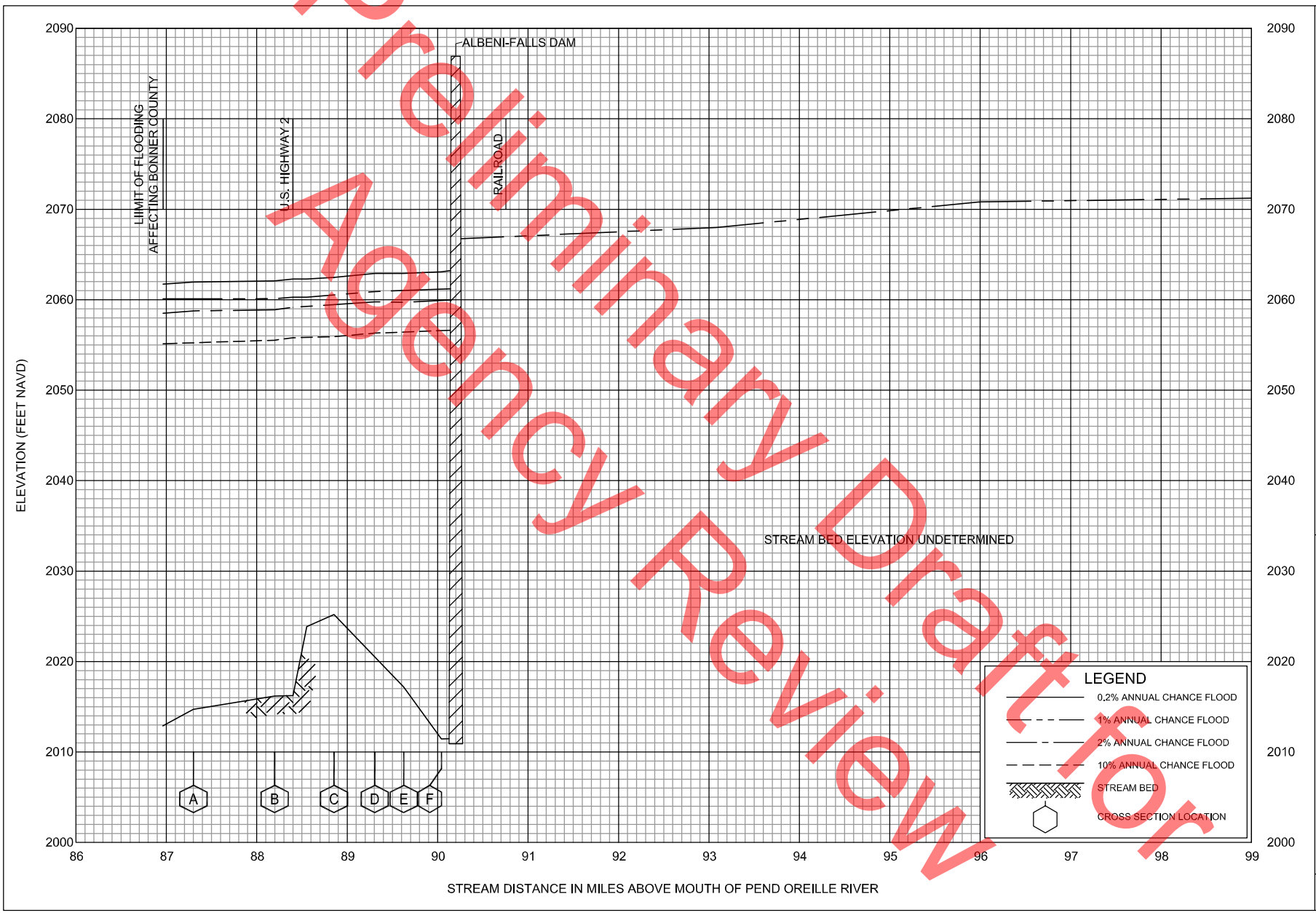

Preliminary Draft for Agency Review

FLOOD PROFILES

PEND OREILLE RIVER

FEDERAL EMERGENCY MANAGEMENT AGENCY

BONNER COUNTY, ID

AND INCORPORATED AREAS

USCG0010403/27

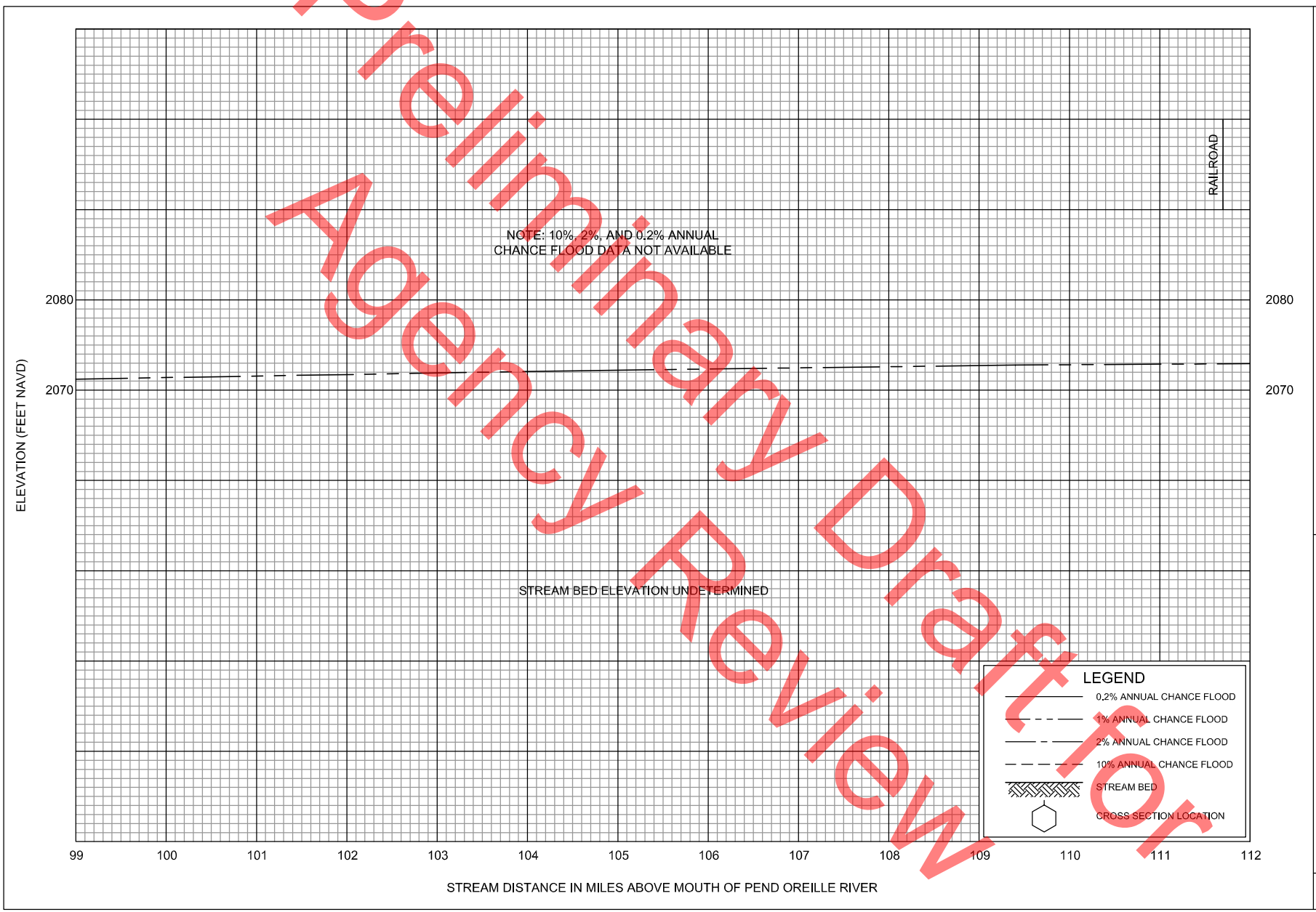

Preliminary Draft for Agency Review

FLOOD PROFILES

PEND OREILLE RIVER

FEDERAL EMERGENCY MANAGEMENT AGENCY

BONNER COUNTY, ID

AND INCORPORATED AREAS

USCG0010413/27

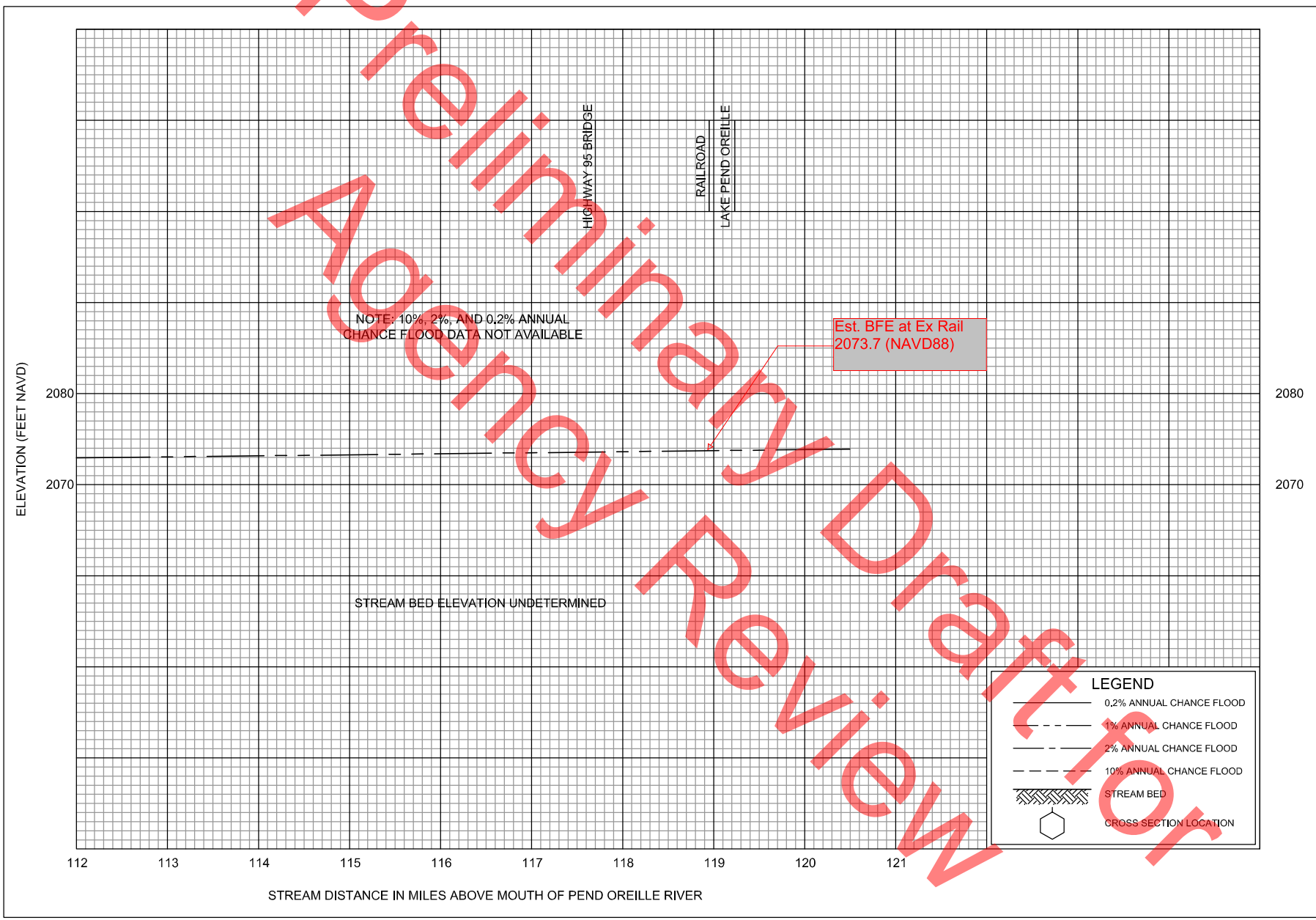

Preliminary Draft for Agency Review

FLOOD PROFILES

PEND OREILLE RIVER

FEDERAL EMERGENCY MANAGEMENT AGENCY

BONNER COUNTY, ID

AND INCORPORATED AREAS

USCG0010423/27

Preliminary Draft for Agency Review

Attachment D: USACE Data & Gage Data

US Army Corps of Engineers
Seattle District

Frequently Asked Questions

Albeni Falls Dam

The U.S. Army Corps of Engineers (Corps) was authorized by Congress in Section 204 of the Flood Control Act of 1950, (PL 81-516, 17 May, 1950) to construct, operate, and maintain Albeni Falls Dam for multiple uses. The Corps operates Albeni Falls Dam according to its congressionally delegated authority to meet these multiple purposes which benefit the local community and regional interests, including hydropower generation, flood risk management, navigation, recreation and fish and wildlife conservation. A graphic of the annual operating cycle can be found on line at:
http://www.nws.usace.army.mil/Missions/CivilWorks/LocksandDams/AlbeniFallsDam.aspx by clicking on "Lake Pend Oreille Summary Hydrograph."

The Multiple Purposes of Albeni Falls Dam:

Hydropower
As part of the Federal Columbia River Power System (FCRPS), Albeni Falls Dam provides storage for 15 downstream federal and non-federal hydroelectric projects on the Columbia and Pend Oreille Rivers. The top 11 feet of Lake Pend Oreille is regulated by Albeni Falls Dam, and contributes nearly 1/3 of the water found in the Columbia River. Water stored in Lake Pend Oreille during the spring and summer is later released in the fall and winter to generate hydropower during the winter when users have the highest demand for electricity.

Flood Risk Management
Prior to dam construction in the early 1950s, the natural falls located at the current site of the dam restricted flow of the river. During high spring runoff periods, this narrowed channel was unable to rapidly pass the large flows of water and thereby caused flooding upstream along the river and the lake. Construction of the dam enlarged the size of the channel at this location thereby allowing more water to pass through and reduce upstream flooding. To a lesser extent, flooding downstream on the Pend Oreille and Columbia Rivers can also be eased by the ability of Albeni Falls Dam to temporarily impound spring flows until downstream flooding has subsided – this isn't possible in very high-flow periods. Water released in the fall and winter reduces flood risk above the dam as well as providing hydropower during the period of high electricity demand.

Recreation and Navigation
Before construction, the natural lake level annually peaked at various times and elevations during the spring runoff. This peak occurred for a brief two to three weeks before the natural lake level would then typically drop to an elevation significantly below the current summer elevation of 2062.5 feet in the summertime, still during the prime recreation season. The current regulation of the top 11 feet of the lake aims to hold lake elevation at a constant high elevation throughout the summer providing increased opportunity for safe navigation and water recreation.

The Corps also administers nine recreation areas as part of Albeni Falls Dam, including four developed campgrounds/day-use areas, two day-use only areas, and three primitive access areas. Albeni Cove, Priest River, Riley Creek, and Springy Point have developed campsites (no hookups, except at Riley Creek) with a variety of day-use facilities. The Visitor Center and Trestle Creek are day-use areas only. Morton Slough, Johnson Creek and the Driftyard (managed by the Idaho Department of Fish and Game) offer primitive camping and boat launch facilities. In fiscal year 2013 Albeni Falls Dam recreation facilities hosted 277,898 visitors.

Fish and Wildlife Conservation
Project lands in the delta regions were specifically set aside for fish and wildlife conservation. These lands are currently managed by Idaho Department of Fish & Game under license from the Corps. Albeni Falls Dam is also regulated throughout the year in consideration of fish and wildlife species.

Seasonal operational parameters

Preliminary Draft for Agency Review

Operations of Albeni Falls Dam are in accordance with both the water control plan detailed in the Water Control Manual and the regionally coordinated annual water management plan, and are generally as follows:

- During the winter holding season, (from approximately January to March) the lake level is held to no lower than the minimum control elevation. This minimum elevation is set to avoid dewatering kokanee redds. The minimum control elevation can be set anywhere between 2,051 and 2,055 feet annually, with 2,056 feet as a maximum elevation. If the determined minimum control elevation is not met prior to the start of kokanee spawning, the lake is not lowered below the level at which kokanee are spawning to avoid dewatering kokanee redds.
    - During flood risk management operations in this season, the lake elevation may increase during this period (up to elevation 2,060 feet). Water stored above elevation 2,056 feet must be evacuated by April 1 for flood risk management.
- During the spring flood season (from approximately April through June) the objective is to manage runoff for flood risk management. The project will frequently go on "free flow" to pass as much water as possible through the project which helps minimize flood elevations on Lake Pend Oreille.
    - After the lake is stabilized following the spring runoff and refill, the lake is operated within a 0.5 foot range between 2,062 and 2,062.5 feet, stream flows permitting.
- During the summer, the lake elevation is held between 2,062 and 2,062.5 feet from the end of the spring runoff (sometime in June to early July) until early to mid-September.
- During the fall, the lake is operated between elevations 2,060 to 2,062.5 feet in September and targets a draft to an elevation no lower than the minimum control elevation by mid-November. The November objective is to stabilize the lake within a 0.5 foot range of the minimum control elevation for kokanee spawning, prepare for winter floods and generate coordinated power for the whole FCRPS. In December the lake level is managed to avoid dewatering kokanee redds.
- Albeni Falls Dam operational targets are set to the elevation of Lake Pend Oreille at the Hope gage. However, elevations may vary at different lake locations. Targets are provided in ranges (generally 0.5 to 1.0 foot range) since operating to a specific elevation is difficult given the size of the watershed, the changing operations of upstream dams, local weather conditions and the size of Lake Pend Oreille itself.

The elevation of Lake Pend Oreille without the presence of Albeni Falls Dam

Lake Pend Oreille elevations would only peak for a few weeks each year if Albeni Falls Dam was not constructed. Some years the peak annual elevation would not exceed elevation 2,062 feet, with a range in peak annual elevation from 2,055 to 2,070 feet. Once the spring snowmelt receded, the lake elevation would decrease through the summer to below the current minimum operating level of 2,051 feet by early September, with lake levels during the winter generally around 2,049 to 2,050 feet. The Graph below shows the median elevations for Lake Pend Oreille as measured at the Hope gage before and after the construction of Albeni Falls Dam.

Preliminary Draft for Agency Review

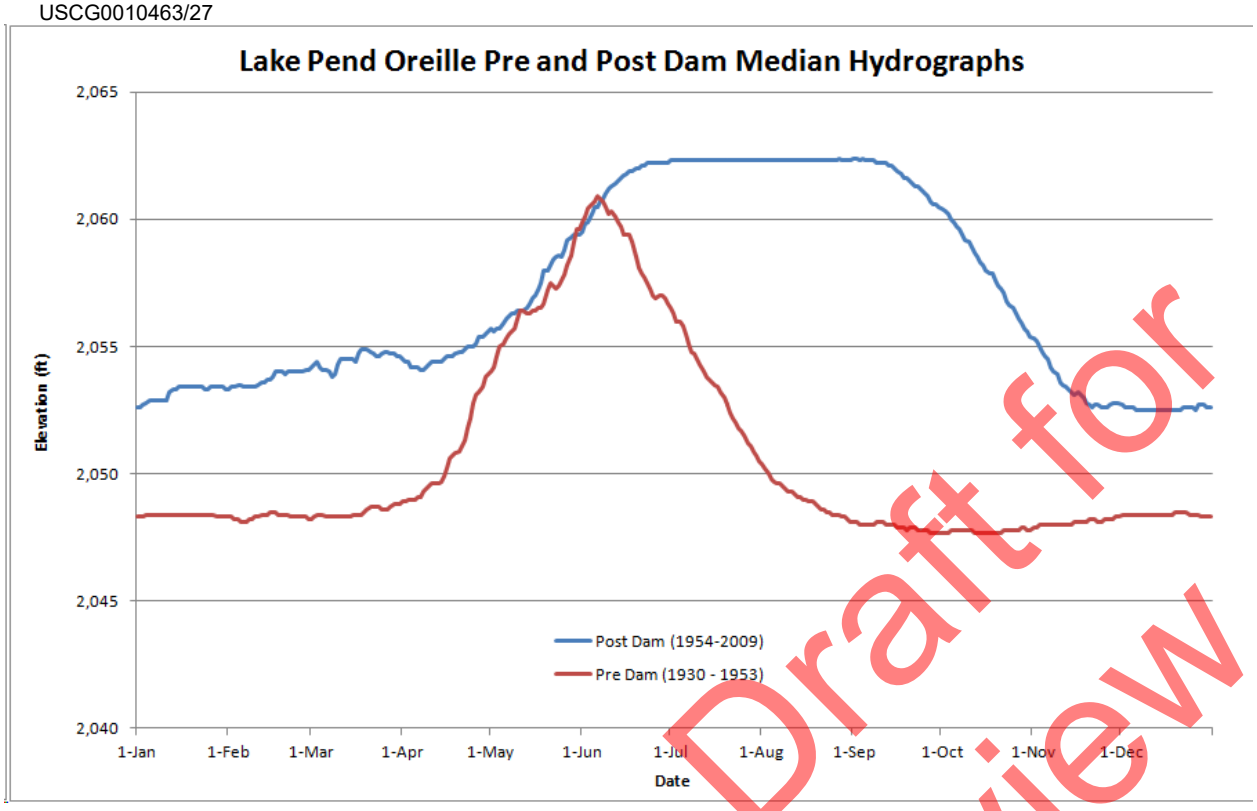

Preliminary Draft for Agency Review

FREQUENTLY ASKED QUESTIONS RELATED TO OPERATIONS:

What is Senate Document No. 9?
Senate Document No. 9 is the transmission of the Interim Report of the Chief of Engineers to the Senate Committee on Public Works discussing the evaluation of the proposed "Albeni Falls Project". This document is referenced in the Flood Control Act of 1950 which authorized the construction of the Albeni Falls Project "substantially in accordance with the recommendation of the Chief of Engineers in Senate Document numbered 9". Pursuant to congressional authority, the proposed operational plan by the Chief of Engineers was refined upon project completion in 1955 and finalized in the 1960 Water Control Manual. Congress itself additionally refined project operations through subsequent statutes such as the Endangered Species Act and the Northwest Power Act. Current operations reflecting such changes are contained in the most recent Water Control Manual.

How do you decide the minimum control elevation each winter? For the last several years, the minimum control elevation was set annually through coordination with Idaho Department of Fish and Game and other entities based on kokanee spawning numbers through the use of a "decision tree". Recent studies completed by the Idaho Department of Fish and Game and the University of Idaho called into question the link between kokanee spawning numbers and use of the "decision tree" to determine the minimum control elevation; the decision tree is no longer in use to set the minimum control elevation. In light of this change, the Corps is currently updating the coordination process for determining the minimum control elevation.

Why is the lake held low in the winter?
The lake is held lower in the winter for many different considerations, including but not limited to: Flood risk management, opportunities to enhance power generation at downstream dams, providing system flexibility in meeting Endangered Species Act requirements and hydropower reliability requirements, meeting fish and wildlife conservation needs (kokanee), and to minimize soil erosion.

What is the reason to provide flexible winter lake levels?
If requested by Bonneville Power Administration, flexible winter lake levels allow the Corps to store water in Lake Pend Oreille in the winter within the project's existing authorized operating limits. The Corps would then release the water days or weeks later for power generation when it is more valuable to the region, such as when a cold snap drives up energy demand or during a power plant outage.

How do you consider Kokanee in your operations?
See the general description of seasonal operations above. During winter operations the lake is not dropped below the level at which kokanee are spawning, once spawning has commenced, to protect kokanee eggs.

What is flood stage for Lake Pend Oreille?
2,063.5 feet as measured at the Hope gage.

What is flood stage for Pend Oreille River?
The Pend Oreille River has a flood flow designated by the National Weather Service as measured by downstream releases of the project. The flood flow was revised downward in 2014 from 100,000 to 95,000 cfs.

What is full powerhouse discharge capacity?
Full powerhouse discharge capacity is between 25,000-32,000 cubic feet per second, depending upon lake elevation.

What is the natural lake constriction and how does it impact operations?
The constriction is the transition from Lake Pend Oreille to the Pend Oreille River near Dover. At times flows downstream of this constriction are limited and upstream lake levels are determined by the bottom of the lake at this constriction point. This constriction can restrict/control the amount of water that can move down the river to the dam. The constriction affects the amount of water that the river can transport and level of the lake when the project is on free flow. In other words, there is a maximum amount of water that can pass over this constriction at any time. When the flows from the lake into the river reach that maximum, for example during a heavy rain or run-off event, the dam no longer is the limiting factor determining the water level. No matter how much water the dam itself passes, flows in the river both upstream and downstream of the dam, as well as in the lake are limited by the “bottle neck” at Dover.

What property easement does the Corps hold around the lake?
Approximately 9,256 acres of flowage easements were acquired on private lands around the lake for the purpose of accommodating wave action, erosion and ground water effects that might occur as a result of the operation of the project. Easements were acquired at fair market value and allow for permanent flooding up to elevation 2,062.5 feet and intermittent flooding up to elevation 2,067.5 feet. Easement boundaries are loosely tied to the 2067.5 level, but each easement has its own legal description. Additional easements were acquired that restrict habitation below 2,067.5 feet in locations where the original easements were determined to be inadequate. There was a recognition in the mid-90’s that easements which contain a no-habitation restriction were too strict for the Pend Oreille River above the dam and below the Long Bridge and consequently the Corps was authorized to release this restriction for dwellings with a first floor elevation above 2,065 feet. Such a release includes language that will release the Corps from liability for flood events that occur where flood waters exceed the 2,065 feet elevation.

Will you change operation of the lake without public comment?
If the operation of the lake falls within the current operating limits of the Water Control Manual for Albeni Falls Dam the operation does not require public comment. If the operation is outside of those bounds, the National Environmental Policy Act (NEPA) may require a public comment period prior to undertaking the operation. In general, however, the Corps holds annual public meetings to discuss past and future operations. To receive e-mail notifications about these meetings, please join our stakeholder list by e-mailing the public affairs office at: DLL-NWS-PAOTeam@usace.army.mil

How do I get more information / track operations?
Data for recent operations can be found online here:
http://www.nwd-wc.usace.army.mil/nws/hh/www/index.html

Preliminary Draft for Agency Review

Short term modeling forecasts are provided by the Northwest River Forecast Center. Their projections for Albeni Falls Dam inflow, outflow and the Lake Pend Oreille at the Hope gage can be found here: http://www.nwrfc.noaa.gov/river/station/flowplot/flowplot.cgi?lid=ALFW1

Modeling for the next 3 to 6 months can be found here: http://www.nws.usace.army.mil/About/Offices/Engineering/HydraulicsandHydrology/OperationalProjections.aspx

In addition, individuals can also request to receive flow notification updates whenever Seattle District Water Management makes a change at Albeni Falls Dam. Please contact the public affairs office at DLL-NWS-PAOTeam@usace.army.mil.

FREQUENTLY ASKED QUESTIONS RELATED TO THE KALISPEL MOA

What is the Memorandum of Agreement, referred to in the flier sent out by the "Save Our Pend Oreille Alliance"?
The Corps, Bonneville Power Administration, Bureau of Reclamation and Kalispel Tribe of Indians signed a Memorandum of Agreement (MOA) in July 2012. The Kalispel MOA is modeled after the "Columbia Basin Fish Accords" discussed below. The MOA and comments received during the public review process are on line at: http://efw.bpa.gov/environmental_services/Document_Library/Kalispel_MOA/

Was the MOA process conducted publicly?
Yes. Columbia Basin Fish Accords, including the Kalispel MOA, were each negotiated among the signatories, with subsequent public review of the proposed MOAs prior to signing. Public comments were considered and reflected in the decisions to sign. The Kalispel MOA had a 30-day public comment period which ran from June 30, 2011 – August 1, 2011. Comments were received by Idaho state entities, local power entities, environmental interests, and local citizens. During this time the Lake Pend Oreille, Pend Oreille River, Priest Lake and Priest River Commission (Lakes Commission) was not funded by the State of Idaho and did not have quarterly meetings. The Corps and BPA briefed the Lakes Commission about the MOA and other activities once funding was restored by the State of Idaho.

Comments that were submitted during this process can be viewed at: http://www.bpa.gov/applications/publiccomments/CommentList.aspx?ID=132

What are the Corps' responsibilities when working with Tribal governments?
The United States has a unique legal and political relationship with Indian tribal governments, established through and confirmed by the U.S. Constitution, treaties, statutes, Executive Orders, and judicial decisions. In recognition of that special relationship, the federal government is charged with engaging in regular and meaningful consultation and collaboration with tribal officials in the development of federal policies that have tribal implications. In accordance with the provisions of these treaties, laws, Executive Orders as well as principles lodged in the Constitution of the United States, the U.S. Army Corps of Engineers has a responsibility to meet Tribal trust obligations, protect trust resources, and obtain Tribal views regarding trust and treaty responsibilities or other actions carried out or administered by the Corps.

What are the "Fish Accords"?
The Columbia Basin Fish Accords (Fish Accords) are designed to supplement biological opinions for listed salmon and steelhead and the Northwest Power and Conservation Council's Fish and Wildlife Program. They provide firm commitments to hydro, habitat and hatchery actions; greater clarity about biological benefits and secure funding for 10 years. Under these agreements, the federal agencies, tribes and states work together as partners to provide tangible survival benefits for fish and wildlife, by upgrading passage over federal dams, by restoring river and estuary habitat, and by effective use of hatcheries.
Since 2008, the Accords partners have:

- Opened up more than 1,100 miles of new spawning habitat – a span of stream and tributary, added up, that is almost as long as the Columbia itself.
- Protected or improved more than 175,000 acres of fish and wildlife habitat – roughly the size of Crater Lake National Park.

Preliminary Draft for Agency Review

- Protected more than 35,000 acre feet of water. This is equivalent to the annual residential water consumption of the city of Portland, Oregon.

The Kalispel Memorandum of Agreement was signed in 2012 in the continued spirit of the Columbia Basin Fish Accords. For more information visit: http://www.salmonrecovery.gov/Partners/FishAccords.aspx .

OTHER FREQUENTLY ASKED QUESTIONS

How will the Columbia River Treaty (CRT) negotiations affect lake level?
Idaho has been prominently at the table with the region's other states and sovereign tribes from the very beginning. The draft treaty recommendation recently submitted to the U.S. State Department calls for no changes to current management operations at Lake Pend Oreille.

What is the Northwest Power & Conservation Council?
Congress passed the Northwest Power Act in 1980, which called for the establishment of an interstate compact of Idaho, Montana, Washington and Oregon. The compact, known as the Northwest Power and Conservation Council is charged with developing a Power Plan and a Columbia Basin Fish and Wildlife Program to serve two primary objectives: to provide an adequate, reliable, economic, and efficient power supply while protecting, mitigating, and enhancing fish and wildlife impacted by the hydro-system. For more information about the Northwest Power & Conservation Council please go to http://www.nwcouncil.org/ . The State of Idaho has two representatives on the NWPCC appointed by the Governor, currently, Jim Yost and Bill Booth.

What was the "Columbia River Compact"?
The attempted "Columbia River Compact" was never ratified by Congress and is therefore not in effect and does not have bearing over the operations of Albeni Falls Dam.

Preliminary Draft for Agency Review

Modeled using current ESP traces as of 07/09/18

Lake Pend Oreille Elevation (Hope Gage) - Probability Chart

Corps of Engineers Projections Based on the 69 Ensemble Streamflow Prediction Traces
Issued by the Northwest River Forecast Center, National Weather Service

US Army Corps of Engineers
Seattle District

The data presented in this graph are provisional and are intended to provide an estimate of Lake Pend Oreille elevation. For the official short term forecast please refer to the River Forecast Center public site for Albeni Falls Forecasts : http://www.nwrfc.noaa.gov/river/station/flowplot/flowplot.cgi?lid=ALFW1

How to read this graph:
75th percentile means that on that day, 75 percent of the traces (forecast scenarios) were below this value. The median points indicate the values such that half of the traces were above and half were below.

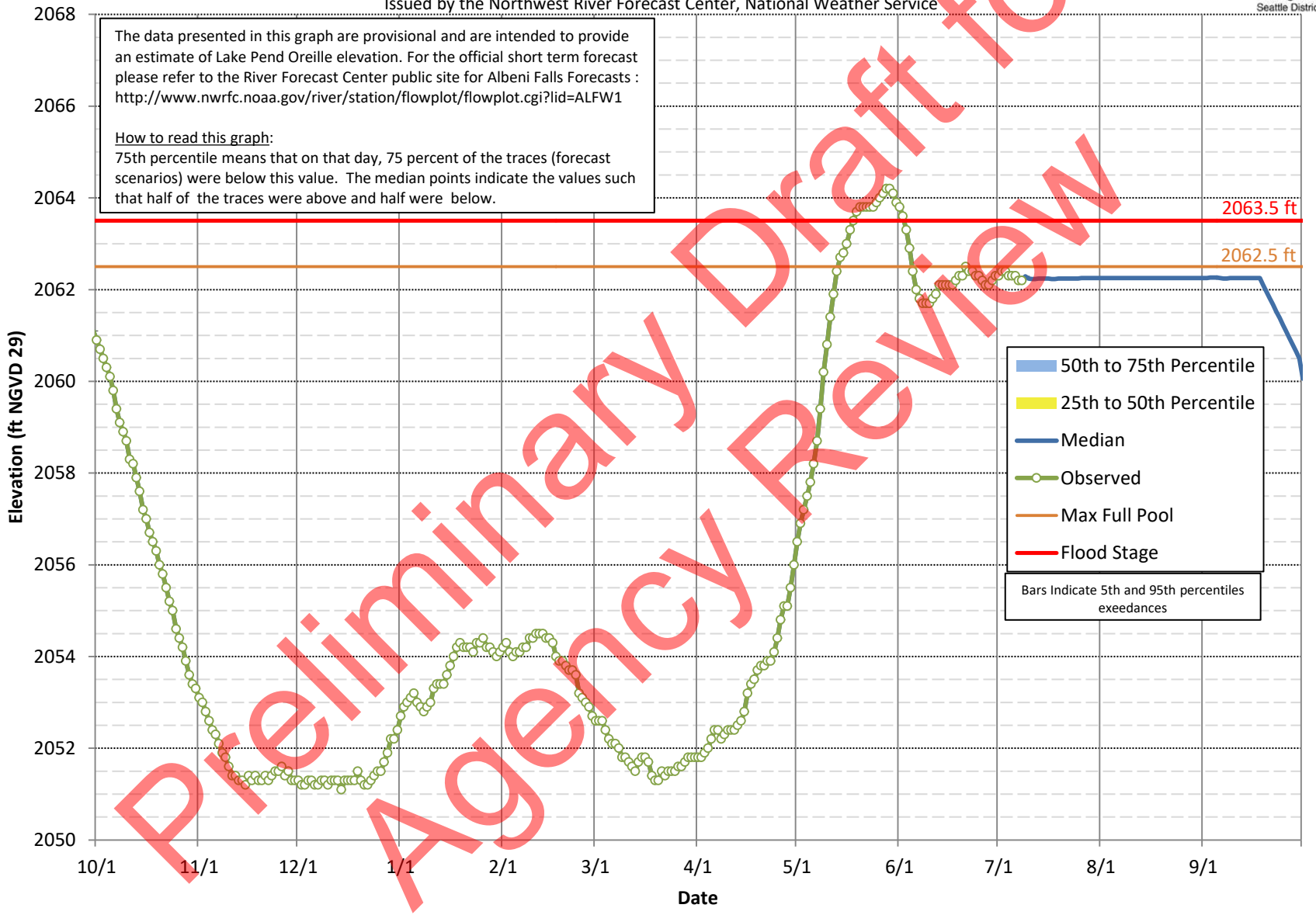

Preliminary Draft for Agency Review

Modeled using current ESP traces as of 07/09/18

Albeni Falls Dam Inflow Probability Chart

Corps of Engineers Projections Based on the 69 Ensemble Streamflow Prediction Traces
Issued by the Northwest River Forecast Center, National Weather Service

US Army Corps of Engineers
Seattle District

The data presented in this graph are provisional and are intended to provide an estimate of Albeni Falls Dam inflow. For the official short term forecast please refer to the River Forecast Center public site for Albeni Falls Forecasts: http://www.nwrfc.noaa.gov/river/station/flowplot/flowplot.cgi?lid=ALFW1

How to read this graph:
75th percentile means that on that day, 75 percent of the traces (forecast scenarios) were below this value. The median points indicate the values such that half of the traces were above and half were below.

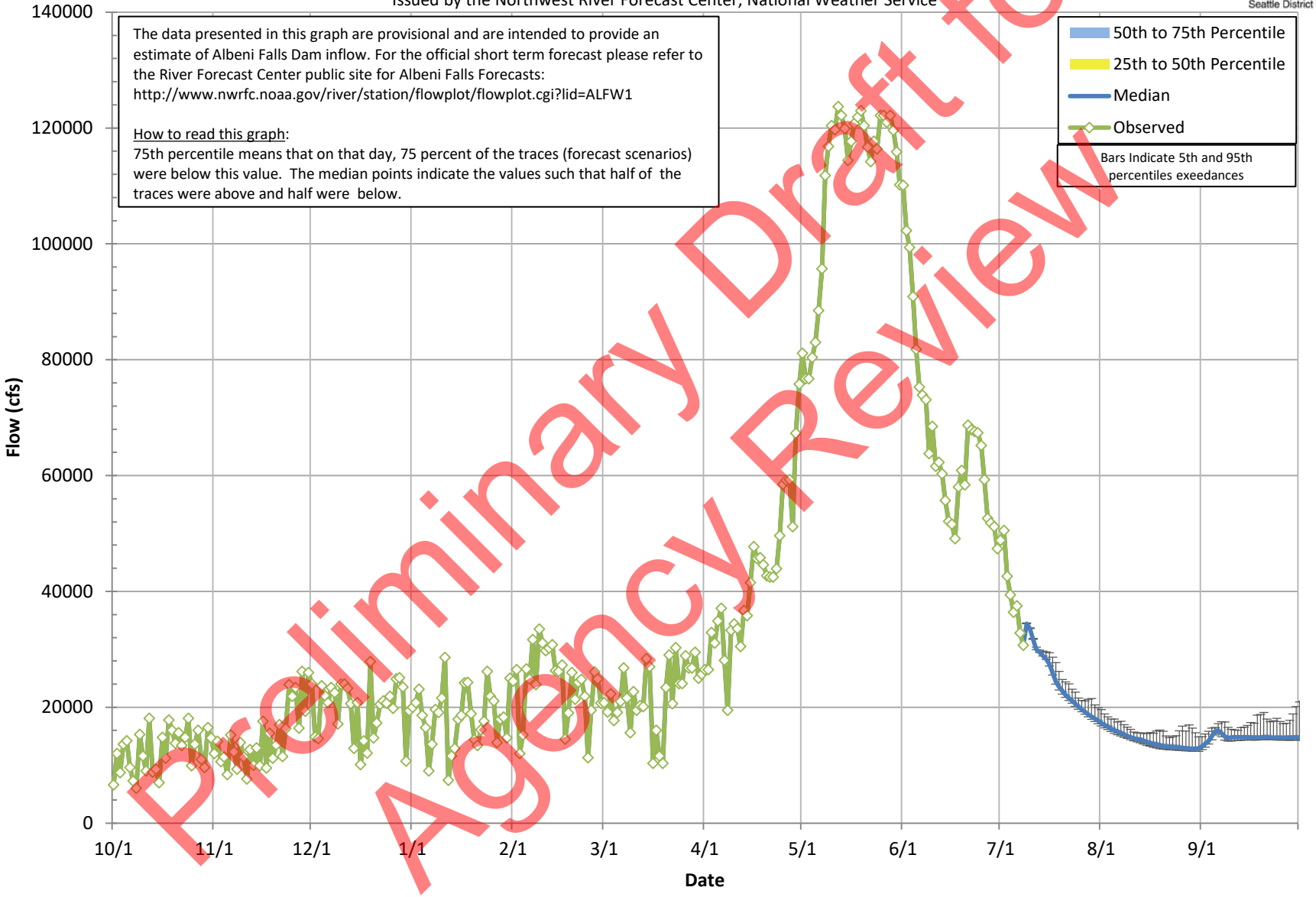

Preliminary Draft for Agency Review

Modeled using current ESP traces as of 07/09/18

Albeni Falls Dam Outflow- Probability Chart

Corps of Engineers Projections Based on the 69 Ensemble Streamflow Prediction Traces
Issued by the Northwest River Forecast Center, National Weather Service

US Army Corps of Engineers
Seattle District

The data presented in this graph are provisional and are intended to provide an estimate of Albeni Falls Dam outflow. For the official short term forecast please refer to the River Forecast Center public site for Albeni Falls Forecasts:
http://www.nwrfc.noaa.gov/river/station/flowplot/flowplot.cgi?lid=ALFW1

How to read this graph:
75th percentile means that on that day, 75 percent of the traces (forecast scenarios) were below this value. The median points indicate the values such that half of the traces were above and half were below.

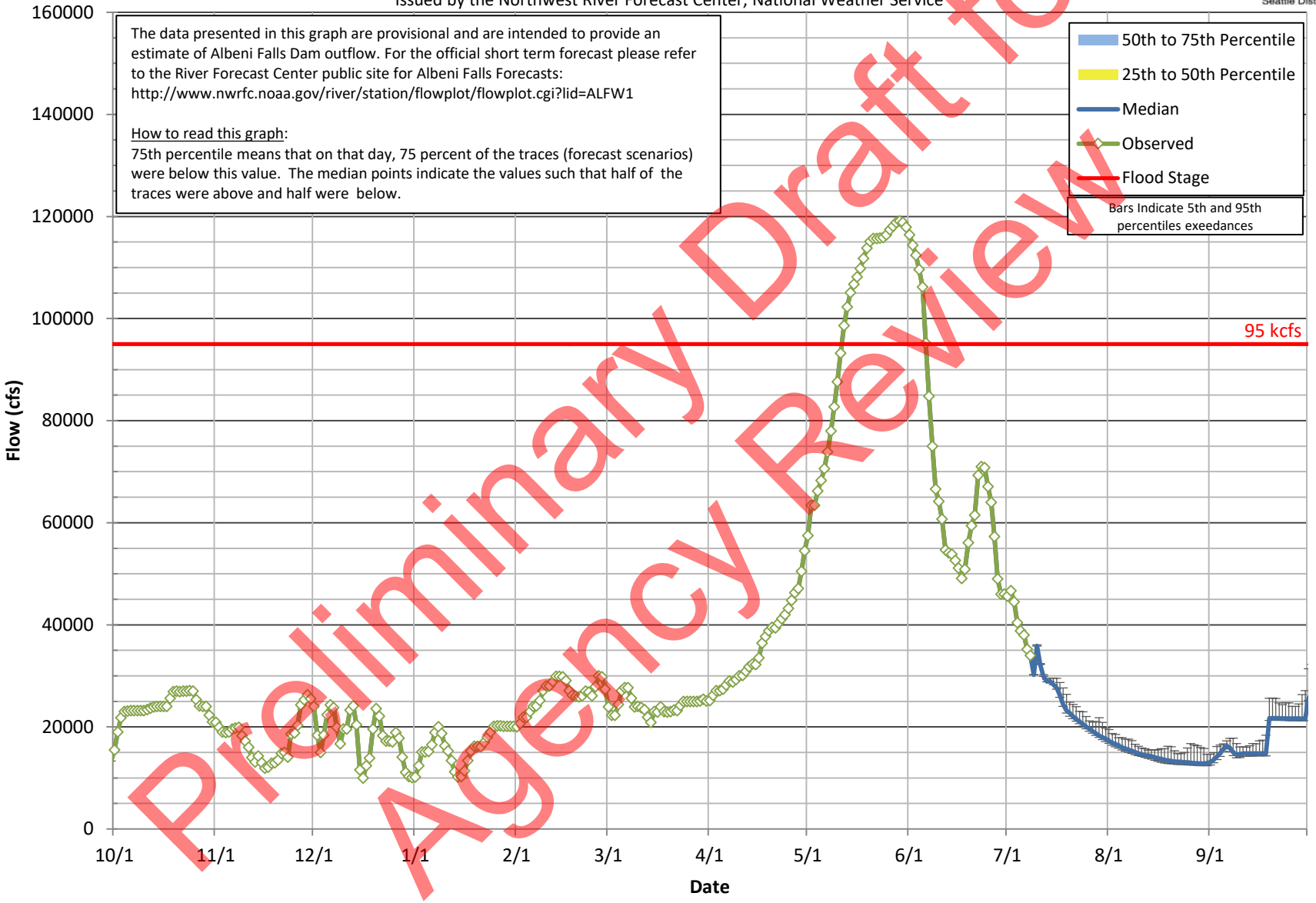

Preliminary Draft for Agency Review

USCG0010533/27

USGS Home
Contact USGS
Search USGS

National Water Information System: Web Interface

USGS Water Resources

Data Category: Surface Water | Geographic Area: Idaho | GO

* We've detected you're using a mobile device. Find our mobile dedicated web site here.

Click to hideNews Bulletins

- Please see news on new formats
- **UPDATE, 11/9: As of November 8, the USGS has successfully restored all of the operational gages that stopped transmitting due to an issue with the satellite telemetry system that records and transmits data. The USGS will now focus on restoring other equipment that experienced the telemetry issues, including about 85 rapid deployment gages that are used periodically for emergency response. Read more**
- Full News

Click to hide state-specific text

Idaho Water Science Center | Subscribe to Water Alerts | Threatened and Endangered Stations in Idaho

USGS 12392500 LAKE PEND OREILLE NR HOPE, ID

PROVISIONAL DATA SUBJECT TO REVISION

Available data for this site | Time-series: Daily data | GO

Click to hidestation-specific text

Station is operated in cooperation with the U.S. Army Corps of Engineers .

Preliminary Draft for Agency Review

USCG0010543/27

This station managed by the Post Falls Field Office.

Available Parameters	Period of Record
☐ All 2 Available Parameters for this site	
☑ 00065 Gage height(Obs.)	1970-10-01 2018-05-23
☑ 72020 Elevation, NGVD29(Obs.)	1929-10-01 1970-09-29

Output format

- ◉ Graph
- ○ Graph w/ stats
- ○ Graph w/ (up to 3) parms
- ○ Table
- ○ Tab-separated

Days (365) [Summary of all available data for this site](#) GO

[Instantaneous-data availability statement](#)

-- or --

Begin date

2017-11-10 **Gage height, feet**

End date

2018-11-10

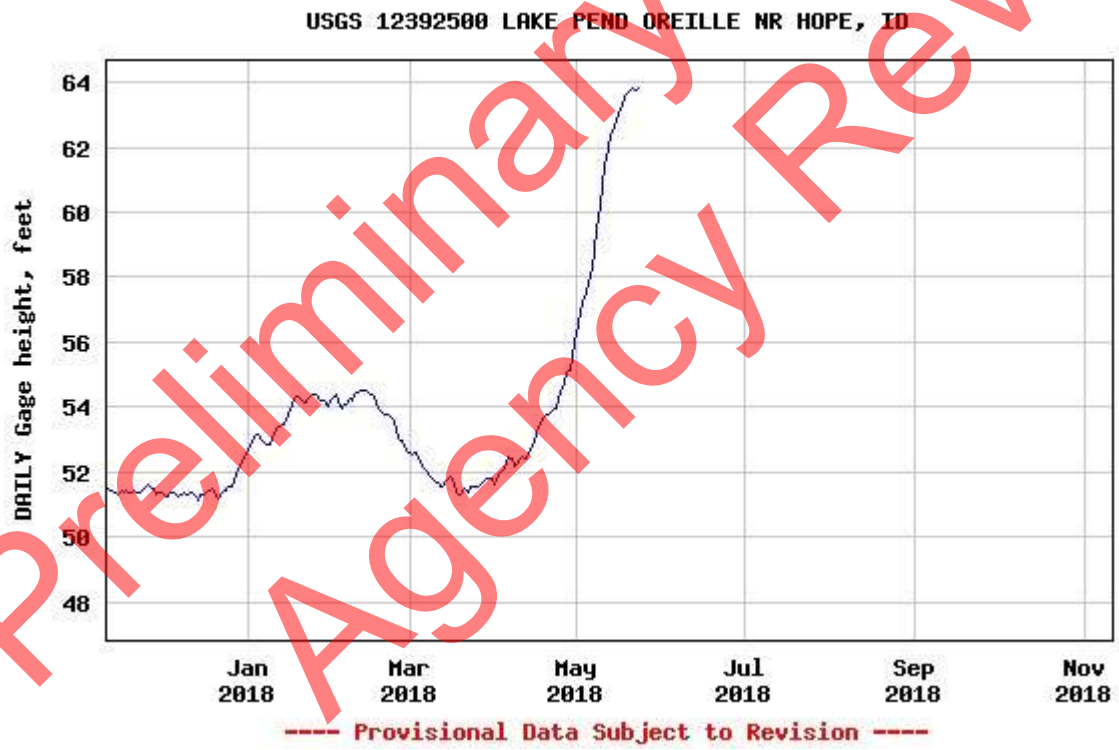

Add up to 2 more sites and replot for "Gage height, feet"

?

Add site numbers

Note

Preliminary Draft for Agency Review

USCG0010553/27

Enter up to 2 site numbers separated by a comma. A site number consists of 8 to 15 digits

GO

Create presentation-quality graph.

Questions about sites/data?
Feedback on this web site
Automated retrievals
Help
Data Tips
Explanation of terms
Subscribe for system changes
News

Accessibility Plug-Ins FOIA Privacy Policies and Notices

U.S. Department of the Interior | U.S. Geological Survey

Title: USGS Surface-Water Daily Data for Idaho
URL: https://waterdata.usgs.gov/id/nwis/dv?

Page Contact Information: Idaho Water Data Support Team
Page Last Modified: 2018-11-11 19:30:00 EST
0.86 0.79 vaww02

Preliminary Draft for Agency Review

USCG0010563/27

weather.gov

National Weather Service
Advanced Hydrologic Prediction Service

Home | News | Organization | Search for: | NWS | All NOAA | Go | BOOKMARK

Local weather forecast by "City, ST"
City, ST | Go

National Conditions
Rivers
Satellite
Climate
Observed Precip

Local Conditions
Warnings
Weather
Forecast
Radar

AHPS Documentation
User Guide
User Brochure

What is AHPS?
Facts
Our Partners

Feedback/Questions
Provide Feedback
Ask Questions

National Observations | WFO Observations | Hydrograph

ALERT: Update on status of the nationwide data transmission error that prevents stream gauge data collected at affected locations from being displayed on the Advanced Hydrologic Prediction Services (AHPS) webpages. The USGS has restored the transmission from all of their gauges or has placed them in a seasonal outage (some Alaska gauges). There are a few USGS gauges that the NWS is not yet receiving the new transmissions and NWS is working to get that data by alternate means. A map of the status of USGS gauges is here. The status map of gauge outages from other agencies is here. The situation has greatly improved and will continue to improve but at a slower pace. The outage maps will now be updated once per week on Thursday. We apologize for the service interruption and hope to have the data restored as soon as possible.

Weather Forecast Office Spokane, WA | Northwest River Forecast Center

Hydrograph | River at a Glance | Download | Probability Information

Auto Refresh: OFF

Printable Image
About this graph
Tabular Data (UTC)
Tabular Data (PST)
XML
RSS
Datum: NGVD29
Metadata

NOTE: Forecasts for the Lake Pend Oreille at Hope are issued routinely year-round.

Observed and forecasted lake levels, as well as the official flood stage, are in reference to the NGVD29 Datum. The Flood Stage of 2063.5 feet is equivalent to an elevation on the new FEMA FIRMS of 2067.37 feet. To learn more about what this means, please click here.

Default Hydrograph

Return to Area Map

Upstream Gauge | Downstream Gauge

Flood Categories (in feet)

Major Flood Stage:	2069
Moderate Flood Stage:	2066
Flood Stage:	2063.5
Action Stage:	2062.6

Zoom Level:14

Switch Basemap

Historic Crests
(1) 2,075.88 ft on 06/01/1894
(2) 2,071.62 ft on 06/09/1948
(3) 2,068.76 ft on 06/20/1933
(4) 2,067.11 ft on 06/10/1950
(5) 2,065.74 ft on 06/05/1997
Show More Historic Crests

(P): Preliminary values

Preliminary Draft for Agency Review

USCG0010573/27

subject to further review.

Recent Crests
(1) 2,064.29 ft on 06/17/2011
(2) 2,065.74 ft on 06/05/1997
(3) 2,065.47 ft on 06/23/1974
(4) 2,065.70 ft on 06/12/1972
(5) 2,067.11 ft on 06/10/1950
Show More Recent Crests

(P): Preliminary values
subject to further review.

Low Water Records
(1) 2,046.27 ft on 02/17/1936

FEMA

For more information on your flood risk go to www.floodsmart.gov.

☐ Show FEMA's National Flood Hazard Layers

Bureau of Land Management,…

KML

Gauge Location

Disclaimer

Latitude/Longitude Disclaimer: The gauge location shown in the above map is the approximate location based on the latitude/longitude coordinates provided to the NWS by the gauge owner.

Flood Impacts & Photos Collapse

If you notice any errors in the below information, please contact our Webmaster

2071 Extensive flooding is likely. Some flooding in the Sandpoint business district can also be expected. Lake level of 2071 feet is in reference to the NGVD29 datum.

2071 Extensive flooding is likely. Some flooding in the Sandpoint business district can also be expected. Lake level of 2071 feet is in reference to the NGVD29 datum.

2069 Major flooding of lakeside homes and docks adjacent to the lake is likely. Significant flooding can also be expected along the Pack, Priest, and Clark Fork River valleys near the lake. Lake level of 2069 feet is in reference to the NGVD29 datum.

2065.75 Portions of Lakeview Avenue in Bayview will be flooded. Extensive damage to docks in Bayview. In 1997 water approached the sewer lift station in Bayview, and the lake level threatened to raise boat houses above their mooring piers.

2065.5 Flooding of some lakeside homes and docks is likely. In 1997 several homes and docks were damaged near Bayview. Lake level of 2065.5 feet is in reference to the NGVD29 datum.

2064 Minor flooding of driveways and low lands in the Pack and Clark Fork River Valleys near the lake. Scenic Bay RV sites and part of parking lot at Scenic Bay Marina in Bayview will be flooded. Most dock ramps around the lake will be underwater. Part of the parking lot behind the Power House in Sandpoint will be flooded. Water will begin to cover part of the sidewalk behind the Edgewater Resort in Sandpoint. Flooding of parking lot and picnic area at Trestle Creek Rec Area. 2064 feet is referenced to NGVD29.

2063.5 Minor flooding of dock ramps, yards, and recreational sites around the lake can be expected. Some erosional damage from wave action is possible along the windward shores. Lake level of 2063.5 feet is in reference to the NGVD29 datum.

About This Location Collapse

Latitude: 48.276389° N, Longitude: 116.346389° W, Horizontal Datum: NAD83/WGS84

River Stage Reference Frame	Gauge Height	Flood Stage	Uses
NWS stage	0 ft	2063.5 ft	Interpreting hydrographs and NWS watch, warnings, and forecasts, and inundation maps
Vertical Datum	**Elevation (gauge height = 0)**	**Elevation (gauge height = flood stage)**	**Elevation information source**
NAVD88	Not Available	2067.37	Survey grade GPS equipment, FEMA flood plain maps,
NGVD 29	Not Ava		
MSL	Not Available	Not Available	Older USGS topographic maps, MSL benchmarks
Other	Not Available	Not Available	

Current/Historical Observations:

- Corps of Engineers (COE) Info for Hope
- U.S. Geological Survey (USGS) Data and Site Info for Hope

Preliminary Draft for Agency Review

USCG0010583/27

Additional Information Collapse

USACE Spring Peak Flow charts available on the web. Copy/paste the following link in your browser.
http://www.nws.usace.army.mil/PublicMenu/Doc_List.cfm?sitename=PUBLICAFFAIRS&pagename=Lake_Pend_Oreille

Resources

Hydrologic Resources

- Text Products
- Past Precipitation
- Forecast Precipitation
- River Forecast Centers
- River Stage Summary
- Inundation Mapping Locations
- Pacific Northwest Water Supply Forecasts
- U.S. Bureau of Reclamation Hydromet Program - Pacific Northwest
- Washington State Dept of Ecology River & Streamflow Monitoring Network
- Weather Forecast Office Spokane, Washington
- Northwest U.S. River Flood Outlook
- Snow Information
- National Flood Insurance Program
- USGS Idaho Water Science Center
- USGS Washington Water Science Center

1903 - 2014

strict
Water & Climate Center

Daily
p - Dept of Ecology
zard Maps

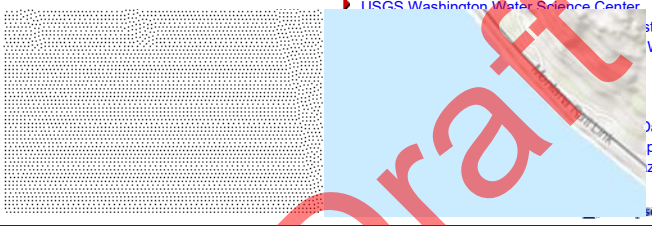

Collaborative Agencies

The National Weather Service prepares its forecasts and other services in collaboration with agencies like the US Geological Survey, US Bureau of Reclamation, US Army Corps of Engineers, Natural Resource Conservation Service, National Park Service, ALERT Users Group, Bureau of Indian Affairs, and many state and local emergency managers across the country. For details, please click here.

NWS Information

National Weather Service
Spokane Weather Forecast Office
2601 N. Rambo Rd.
Spokane, WA 99224
(509) 244-0110
Ask Questions/Webmaster
Page last modified: 21-Dec-2016 10:35 PM

Disclaimer
Credits
Glossary

Privacy Policy
About Us
Career Opportunities

Preliminary Draft for Agency Review

Preliminary Draft for Agency Review

Attachment E: Existing Bridge Plans

Highway 95

Preliminary Draft for Agency Review

Preliminary Draft for Agency Review

USCG001061 3/27

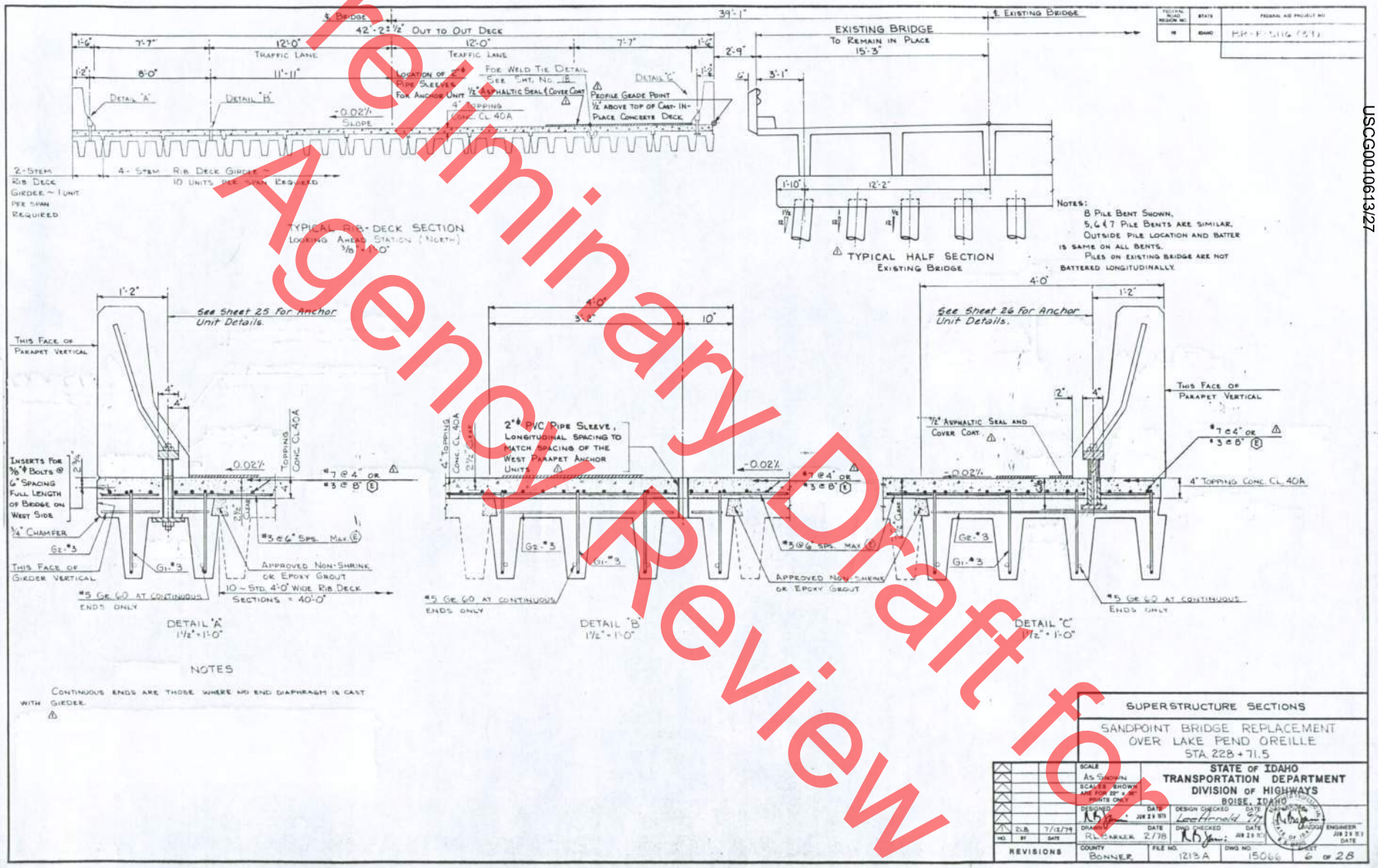

NOTES

CONTINUOUS ENDS ARE THOSE WHERE NO END DIAPHRAGM IS CAST WITH GIRDER.

REGION NO.	STATE	FEDERAL AID PROJECT NO.
10	IDAHO	BR-F-5116 (31)

SUPERSTRUCTURE SECTIONS

SANDPOINT BRIDGE REPLACEMENT
OVER LAKE PEND OREILLE
STA. 228 + 71.5

STATE OF IDAHO
TRANSPORTATION DEPARTMENT
DIVISION OF HIGHWAYS
BOISE, IDAHO

REVISIONS						
NO.	BY	DATE				
1	D.L.B.	7/12/79				

SCALE: As Shown. SCALES SHOWN ARE FOR 22" x 34" PRINTS ONLY

DESIGNED: R.B. Yancey, JUN 23 1978 — DRAWN: R.L. Yarkek, 2/78 — DESIGN CHECKED: Lee Hirnold, 7/79 — DWG CHECKED: R.B. Yancey, JUN 23 1978 — LANDSCAPE ENGINEER: DATE JUN 23 1978

COUNTY: Bonner — FILE NO. 1213 A — DWG NO. 15066 — SHEET 6 OF 28

MICROFILM RECORD
DATE FILMED: April 1979
ROLL NO.: SEE INDEX
INITIALS: MCB

FEDERAL ROAD REGION NO.	STATE	FEDERAL AID PROJECT NO.
10	IDAHO	BR-F-5116(39)

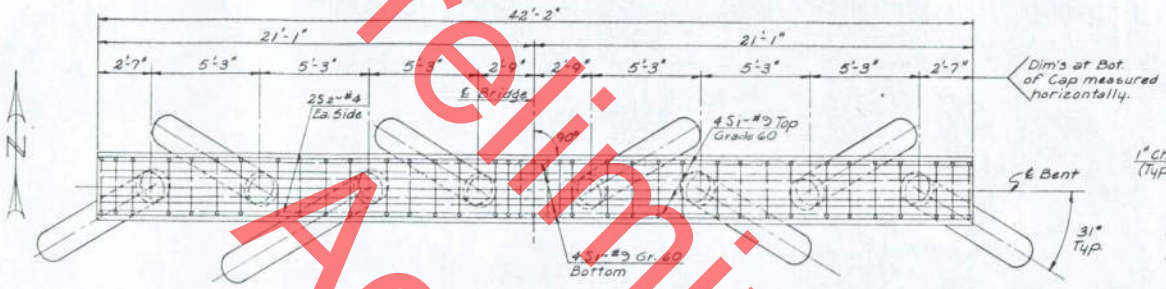

PLAN
No Scale

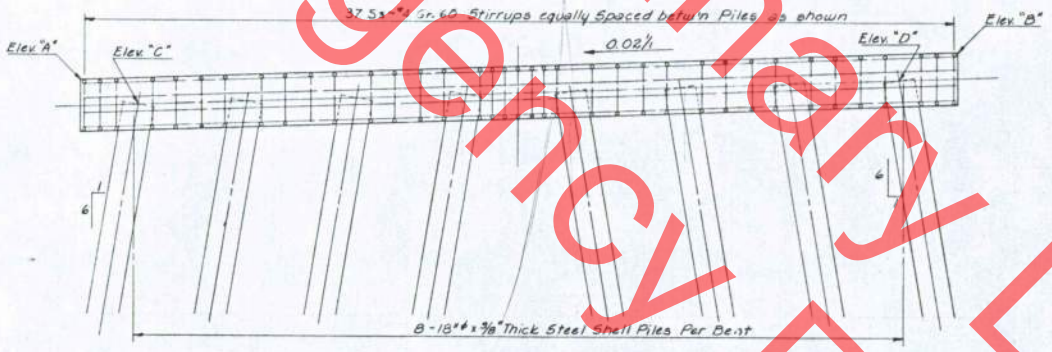

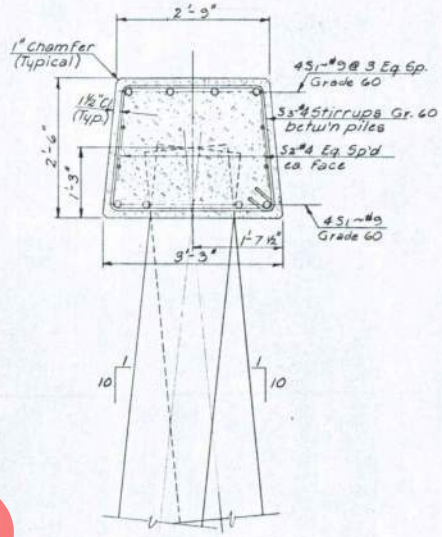

TYPICAL SECTION
1" = 1'-0"

SCHEDULE OF ELEVATIONS						
Bent No.	Station of ℄ of Bent	Unit No.	ELEVATION A	B	C	D
1	199+58.00	1	2081.43	2082.27	2080.23	2080.97
2	199+93.00	1	81.23	82.13	80.09	80.83
3	200+28.00	1 & 2	81.15	81.99	79.95	80.63
4	200+63.00	2	81.01	81.85	79.81	80.55
5	200+98.00	2	80.87	81.71	79.67	80.41
8	201+85.00	2	80.52	81.36	79.32	80.06
9	202+20.00	2	80.38	81.22	79.18	79.92
10	202+55.00	2	80.24	81.08	79.04	79.78
11	202+90.00	2 & 3	80.10	80.94	78.90	79.64
12	203+25.00	3	79.96	80.80	78.76	79.50
15	204+12.00	3	79.61	80.45	78.41	79.15
16	204+46.58	3 & 4	~~79.47~~	~~80.32~~	~~78.27~~	~~79.02~~
17	205+23.42	4	~~79.14~~	~~79.99~~	~~77.94~~	~~78.69~~
18	205+64.00	4 & 5	79.01	79.85	77.80	78.55
21	206+51.00	5	78.66	79.50	77.46	78.20
22	206+86.00	5	78.52	79.36	77.32	78.06
23	207+21.00	5 & 6	78.38	79.22	77.18	77.92
24	207+56.00	6	78.24	79.08	77.04	77.78
25	207+91.00	6	78.10	78.94	76.90	77.64
28	208+78.00	6	77.75	78.59	76.55	77.29
29	209+13.00	6	77.61	78.45	76.41	77.15
30	209+48.00	6	77.47	78.31	76.27	77.01
31	209+83.00	7	77.33	78.17	76.13	76.87
32	210+18.00	7	77.19	78.03	75.99	76.73
35	211+05.00	7	76.84	77.68	75.64	76.38
36	211+40.00	7	76.70	77.54	75.50	76.24

SCHEDULE OF ELEVATIONS						
Bent No.	Station of ℄ of Bent	Unit No.	ELEVATION A	B	C	D
37	211+75.00	8	76.66	77.40	75.36	76.10
38	212+10.00	8	76.42	77.26	75.22	75.96
39	212+45.00	8	76.28	77.12	75.08	75.82
42	213+32.00	8	75.93	76.77	74.73	75.47
43	213+67.00	8	75.79	76.63	74.59	75.33
44	214+02.00	8	75.65	76.49	74.45	75.19
45	214+37.00	9	75.51	76.35	74.31	75.05
46	214+72.00	9	75.37	76.21	74.17	74.91
49	215+59.00	9	75.02	75.87	73.82	74.57
50	215+94.00	9	74.88	75.73	73.68	74.43
51	216+29.00	10	74.74	75.59	73.54	74.29
52	216+64.00	10	74.61	75.45	73.40	74.15
53	216+99.00	10	74.46	75.31	73.26	74.01
56	217+86.00	10	74.32	75.17	73.12	73.87
THRU	THRU	THRU	THRU	THRU	THRU	THRU
179	257+85.00	28	74.32	75.17	73.12	73.87

See sht #13

NOTES

1. The Schedule of Elevations does not include the Tower and Navigation Bents. Piles shall be driven to a bearing value of 60 ton per pile. For anchor units see sheets 15 & 16.

*HAT 28 April 81 Const. Changes

S or E BENTS - BEARING PILES

SANDPOINT BRIDGE REPLACEMENT
OVER LAKE PEND OREILLE
STA. 228+71.5

REVISIONS			
3	SJS	10-31-79	
2	JCN	8-17-79	
1	HEH	7-13-79	
NO.	BY	DATE	

SCALE: As Shown
SCALES SHOWN ARE FOR 22" x 34" PRINTS ONLY

STATE OF IDAHO
TRANSPORTATION DEPARTMENT
DIVISION OF HIGHWAYS
BOISE IDAHO

DESIGNED: R. 6/79 — DATE
DESIGN CHECKED: Thomas Tate 6/79 — DATE
DRAWN: M.K.P. 8 May 79 — DATE
DWG CHECKED: R.P. Newell 9/79 — DATE
ENGINEER: JAN 29 1979 — DATE

COUNTY: BONNER
FILE NO.: 1213A
DWG NO.: 15066
SHEET 9 OF 28

MICROFILM RECORD
DATE FILMED: APR 11 1979
ROLL NO.: SEE INDEX
NOTES:

USCG0010623/27

Preliminary Draft for Agency Review

USCG001063/27

Preliminary Draft for Agency Review

FED. ROAD REGION NO.	STATE	FEDERAL AID PROJECT NO.
10	IDAHO	BR-F-5116(39)

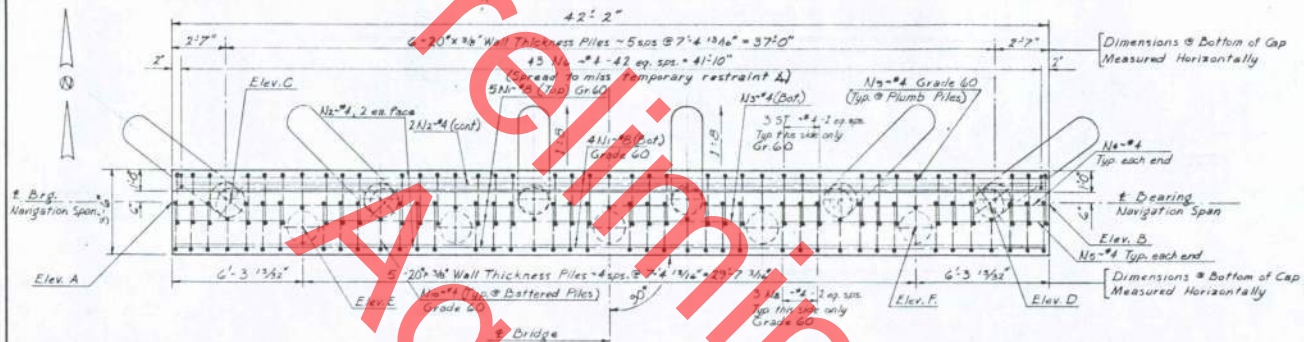

CAP PLAN
3/16" = 1'-0"

ELEVATION SCHEDULE							
	Elev. A	Elev. B	Elev. C *	Elev. D *	Elev. E *	Elev. F *	
Bent #6	2078.64	2079.49	2077.44	2078.19	2077.52	2078.11	△*
Bent #7	2078.31	2079.15	2077.11	2078.85	2077.18	2077.78	

△ * Elevation @ Top of Pile

NOTE:
18" ϕ pile with 3/16" wall thickness and Specified Yield Strength of 50 Ksi may be substituted for the 20" piles
Piles shall be driven to a bearing value of 70 tons per pile.

CAP ELEVATION
BENT 17 SHOWN, BENT 16 SIMILAR
3/16" = 1'-0"

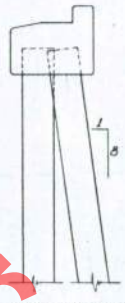

CAP END ELEVATION

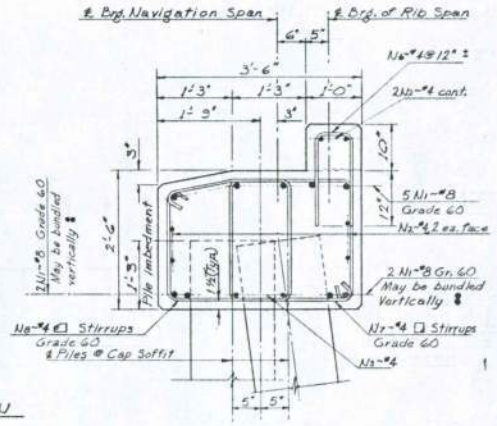

CAP SECTION
1" = 1'-0"

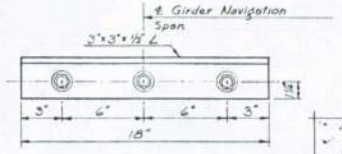

DETAIL A-A
3" = 1'-0"

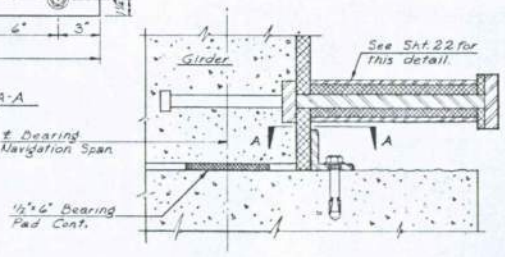

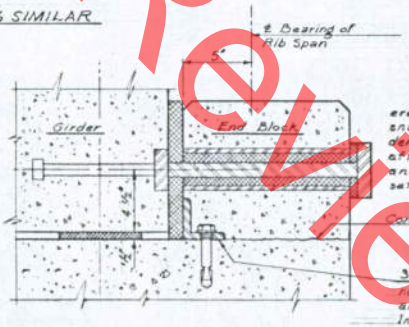

TEMPORARY RESTRAINT DETAILS
3" = 1'-0"

Temporary Restraint Note
After the first girder has been erected, set joint filler and angle snugly against both ends of the girder and fasten to cap. Repeat this process after erecting the 2nd, 4th, 6th, 8th, and 10th girders. After all girders are set, cast 4's into the end block.

3"x 3"x 1/2"x 18" L drill 3-7/8" ϕ holes for 3/4"x 4" WEJ-17 anchor bolts (or approved Equiv.). Install bolts in accordance with manufacturer's recommendations. See Detail A-A for spacing.

* H.A.T. 28 Apr. 1982 As Const. Change

NAVIGATION SPAN BENT CAP DETAILS

SANDPOINT BRIDGE REPLACEMENT
OVER LAKE PEND OREILLE
STA. 228+71.5

STATE OF IDAHO
TRANSPORTATION DEPARTMENT
DIVISION OF HIGHWAYS
BOISE IDAHO

SCALE	DESIGNED	DESIGN CHECKED	DRAWN	DWG CHECKED
As Shown	Lee Arnold 9/77	Marvin Fallon 9/77	2 S.J.S. 10-21-79	1 J.C.H. 8-17-79
SCALES SHOWN ARE FOR 22" x 36" PRINTS ONLY	DATE	DATE	DATE	DATE
			2 Lee Arnold 6-4-79	Lee Arnold 9/77

REVISIONS: NO. BY DATE

COUNTY: Banner | FILE NO. 1213-A | DWG NO. 15066 | 13 of 28

ENGINEER: R. B. Jones

MICROFILM RECORD
DATE FILMED: April 1982
ROLL NO.: SEE INDEX

Existing Bridge 3.9

Preliminary Draft for Agency Review

USCG0010653/27

R.10 720

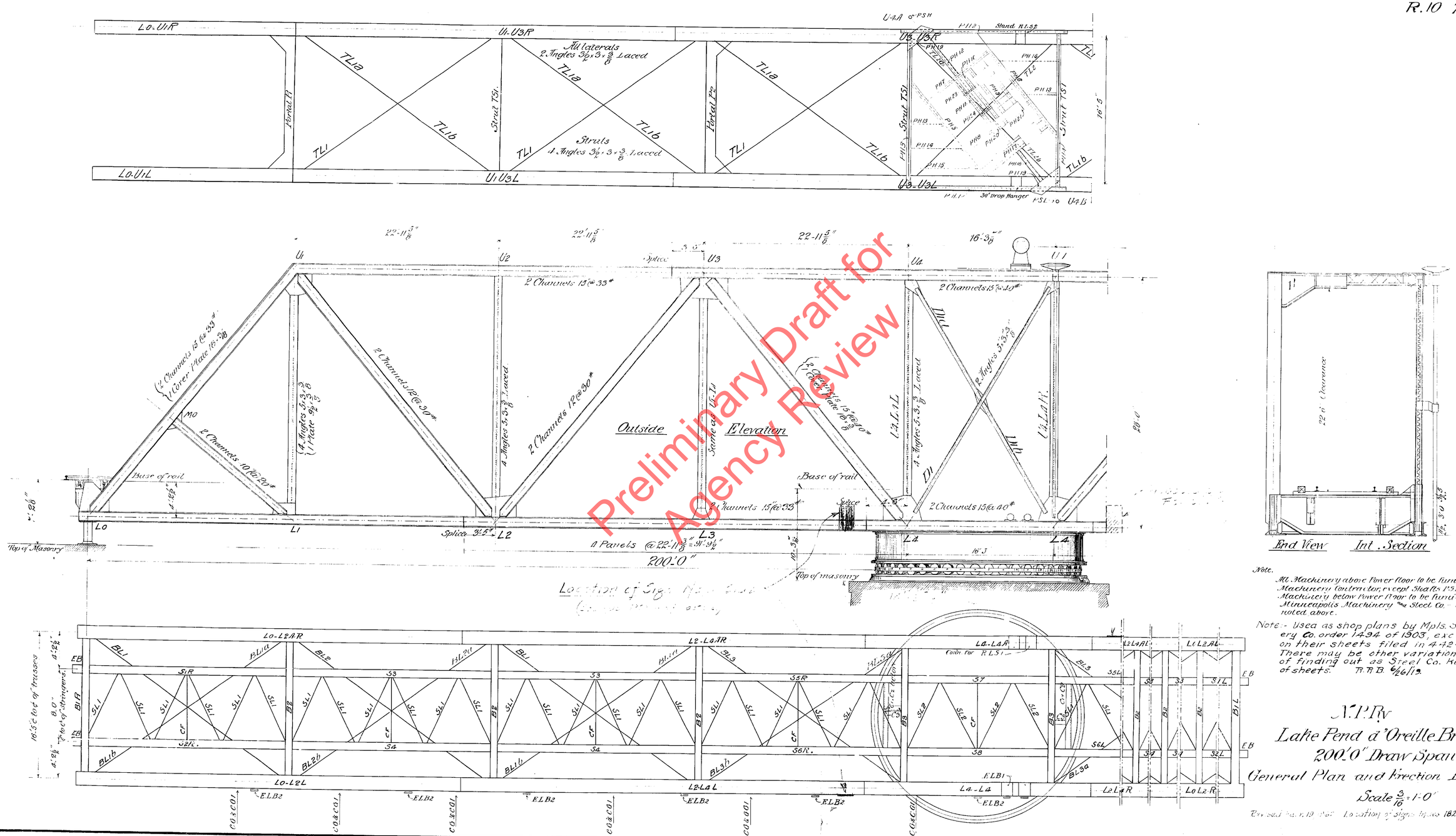

Preliminary Draft for Agency Review

USCG0010663/27

442-25

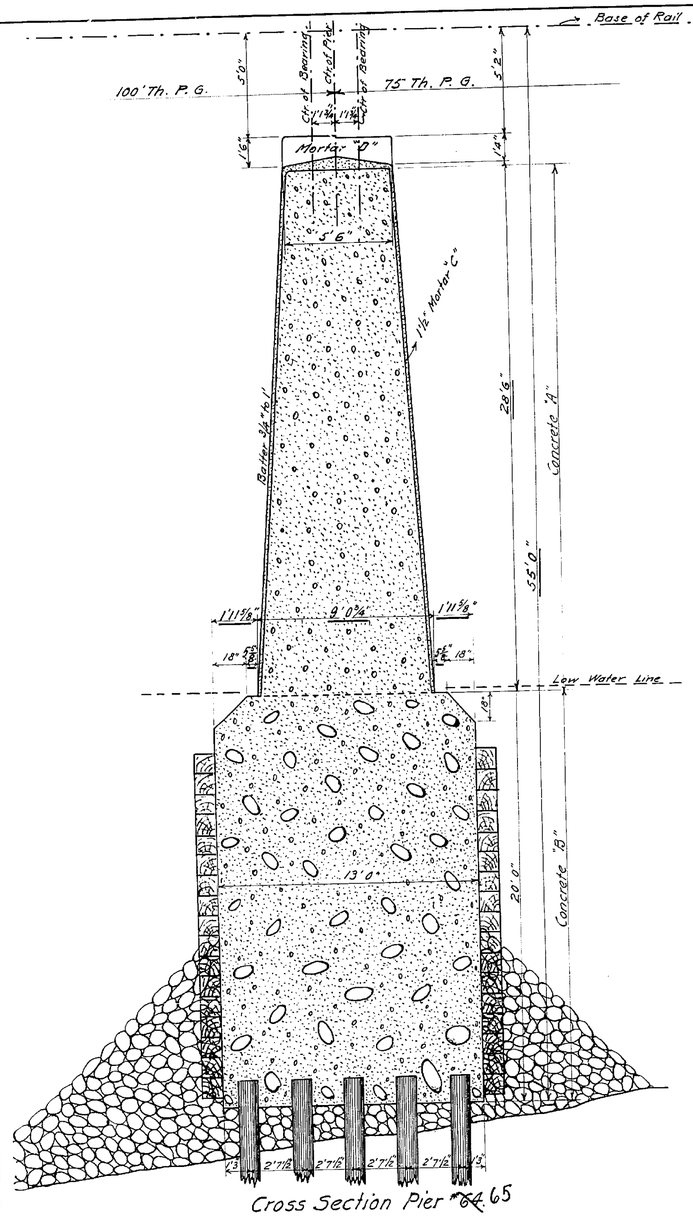

Cross Section Pier #~~64~~ 65

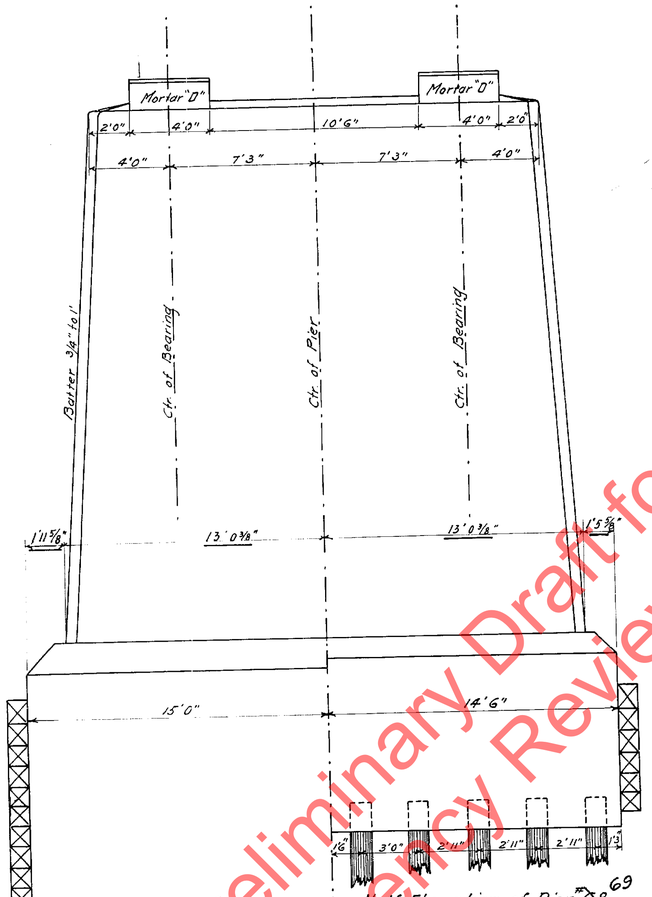

Half Elevation of Pier #~~68~~ 69

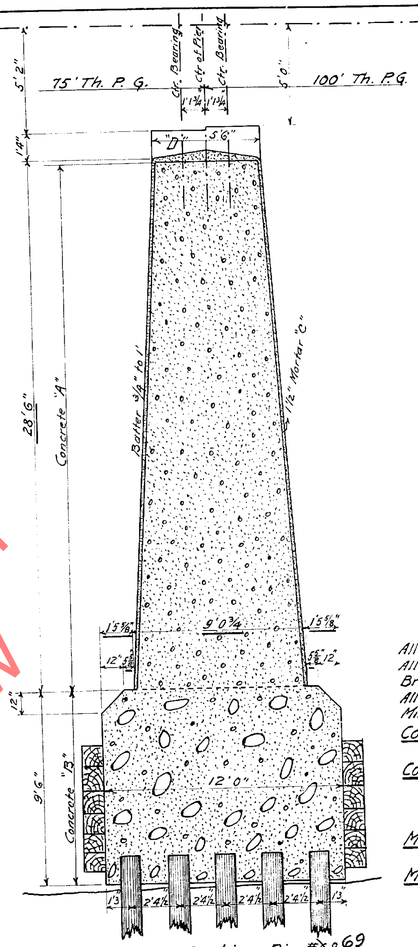

Cross Section Pier #~~68~~ 69

N.P.R.Y.
Idaho Div. Main Line
Bridge No. ~~73~~ 32 - Sandy Point.
Detail of Piers
No. ~~64~~ 65 and ~~68~~ 69.

Scale: 1/4" = 1'

Office of Chief Engineer. April 15th 1902.

Approved:-

Chief Engineer.

Concrete and Mortar.

All cement to be the best American Portland Cement.
All sand to be clean, coarse and sharp.
Broken stone or quartz pebbles to be clean and not over 2¼" in size.
All proportions are measured by volume.
Mixture not so wet as to let water flush to surface except by tamping.

Concrete "A":- In body of Piers. Ingredients of mixture: One part cement, three parts sand and five parts broken stone or pebbles.

Concrete "B":- In foundations and footing courses. Same mixture as concrete "A". Boulders (Niggerheads) not to exceed one foot in size, thrown in promiscuously and thoroughly imbedded by ramming.

Mortar "C":- In outside shell and coping. One part cement and three parts sand.

Mortar "D":- In bearing blocks and parts of coping serving as bearing blocks and receiving direct pressure from superstructure. One part cement and two parts sand.

Anchor Bolts.

Anchor Bolts 1½" diam. 1'4" long to project 3½" Expansion end and Fixed end 4½" above bearing blocks.

Note: Underscored figures do not scale:

Note:-
Piers protected by Crib as shown in red.

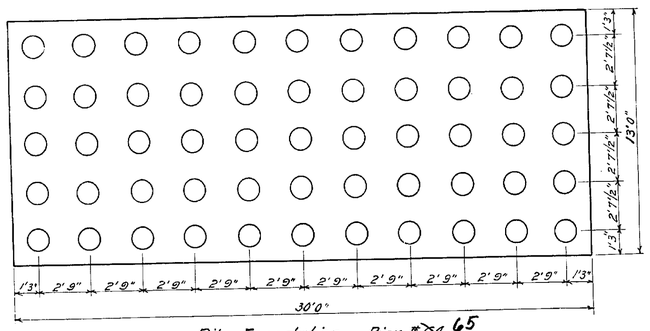

Pile Foundation - Pier #~~64~~ 65

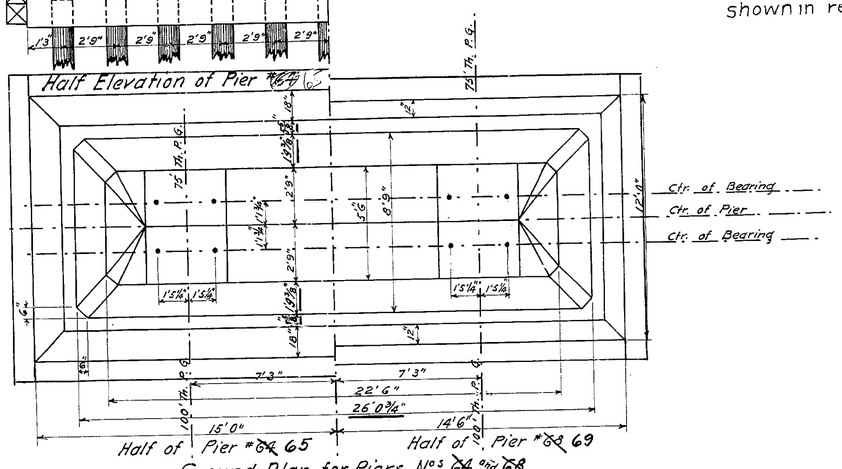

Ground Plan for Piers No.s ~~64~~ 65 and ~~68~~ 69

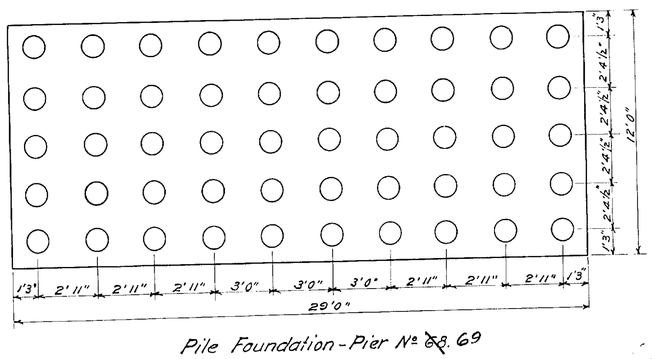

Pile Foundation - Pier No. ~~68~~ 69

Preliminary Draft for Agency Review

442-25

Detail of Piers No.s ~~64~~ 65 and ~~68~~ 69 Br. # ~~73~~ 32 - Sandy Point Idaho Div. Main Line. Ch. N.P.

Complete in 6 sheets sheet No. 3.

USCG0010673/27

442-25

N.P.Ry
Idaho Division, Main Line.
Bridge No. ~~13~~ 32
Sandy Point Bridge
Details of Piers No.s ~~65~~ 66 & ~~67~~ 68
Scale: 1/4" = 1'
Office of Chief Engr. May 14th 1902

Approved:-
Chief Engineer.

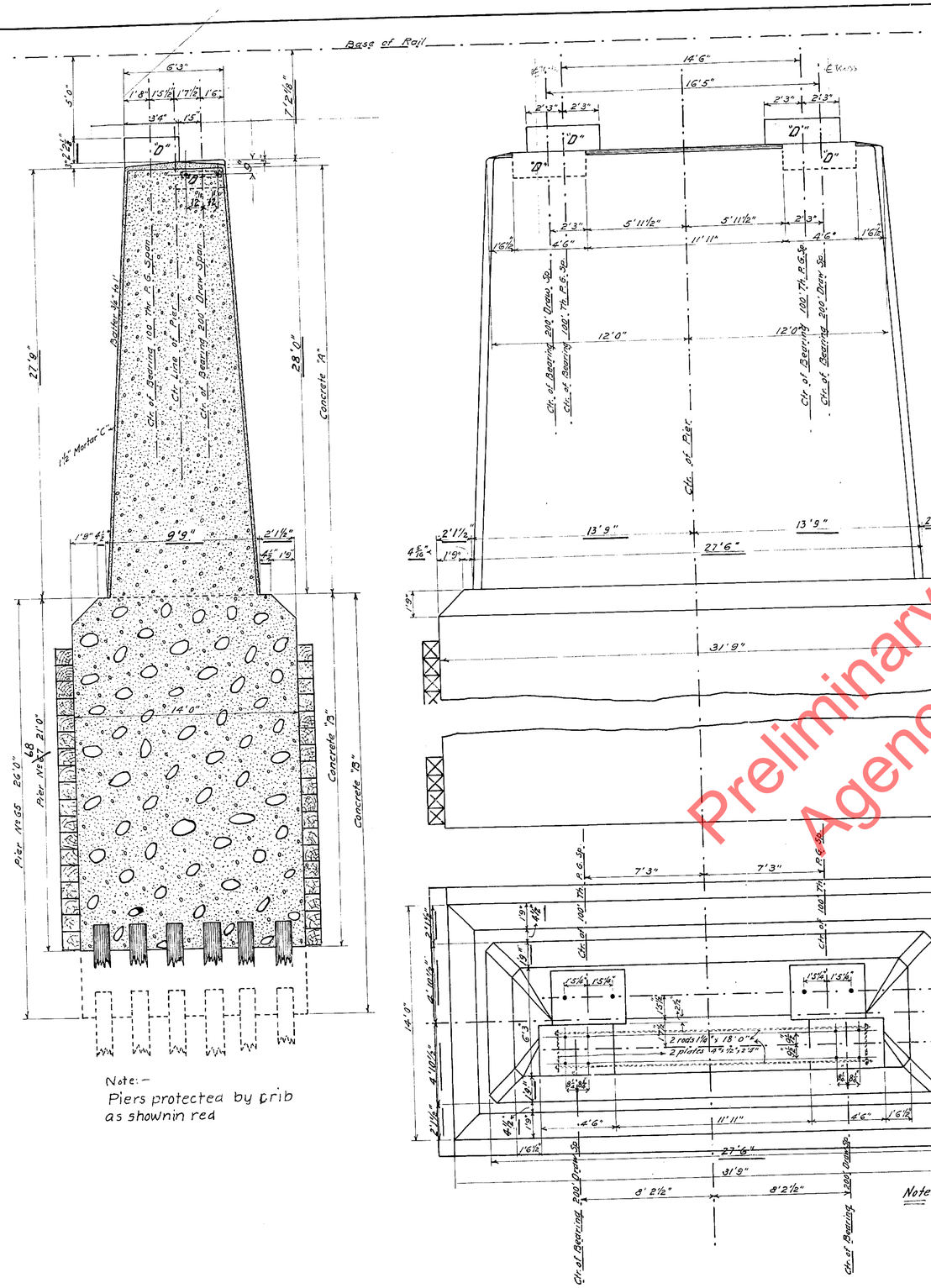

Note:-
Piers protected by crib as shown in red

Note: Underscored figures do not scale.

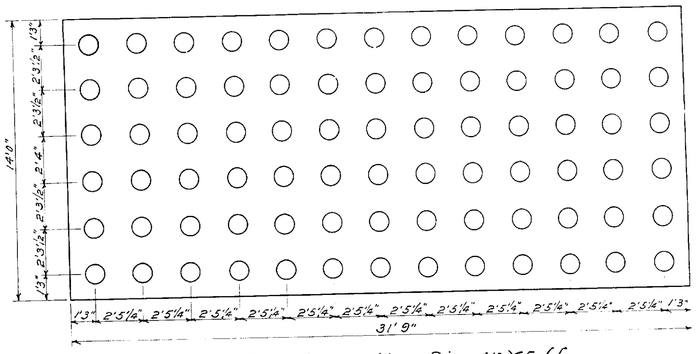

Pile Foundation- Pier No. ~~65~~ 66

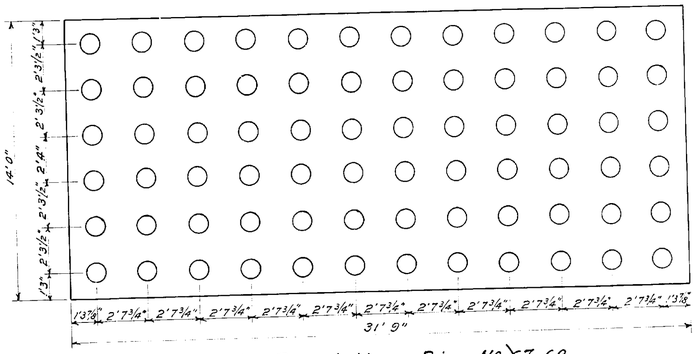

Pile Foundation- Pier No. ~~67~~ 68

Concrete & Mortar

All cement to be the best American Portland Cement.
All sand to be clean, coarse and sharp.
Broken stone or quartz pebbles to be clean and not over 2½" in size.
All proportions are measured by volume.
Mixture not so wet as to let water flush to surface except by tamping.
Concrete "A"- In body of Piers. Ingredients of mixture: One part cement, three parts sand and five parts broken stones or pebbles.
Concrete "B"- In foundations and footing courses. Same mixture as Concr. "A" Boulders (Nuggetheads) not to exceed one foot in size, thrown in promiscuously and thoroughly imbedded by ramming.
Mortar "C"- In outside shell and coping. One part cement and three parts sand.
Mortar "D"- In bearing blocks and parts of coping serving as bearing blocks and receiving direct pressure from superstructure. One part cement and two parts sand.

Anchor Bolts.

Anchor bolts 1½" diam 1'4" long to project 4½" above bearing blocks for 100' Th. P.G. Span
" " 1½" " 1'10" " " " 4½" " " " " 200' Draw Span.

Preliminary Draft for Agency Review

442-25

Details of Pier No.s ~~65~~ 66 & ~~67~~ 68 - Bridge No. ~~13~~ 32, Sandy Point - Idaho
Complete in 6 sheets. Sheet No. 4. C.H.

USCG0010683/27

442-25

N.P.R.R.
Idaho Division, Main Line.
Bridge No. 33.
Sandy Point Bridge.
Detail of Draw Pier No 67
Scale: 1/4" = 1'
Office of Chief Engr. May 9th 1902.
Approved:- Chief Engineer.

Concrete & Mortar.

All cement to be the best American Portland Cement.
All sand to be clean, coarse and sharp.
Broken stone or quartz pebbles to be clean and not over 2¼" in size.
All proportions are measured by volume.
Mixture not so wet as to let water flush to surface except by tamping.
Concrete "A"- In body of Pier. Ingredients of mixture: One part cement, three parts sand and five parts broken stone or pebbles.
Concrete "B"- In foundation and footing course. Same mixture as Concrete "A". Boulders (Niggerheads) not to exceed one foot in size, thrown in promiscuously and thoroughly imbedded by ramming.
Mortar "C"- In outside shell and coping. One part cement and three parts sand.
Mortar "D"- In bearing block and coping serving as bearing and receiving direct pressure from superstructure. One part cement and two parts sand.

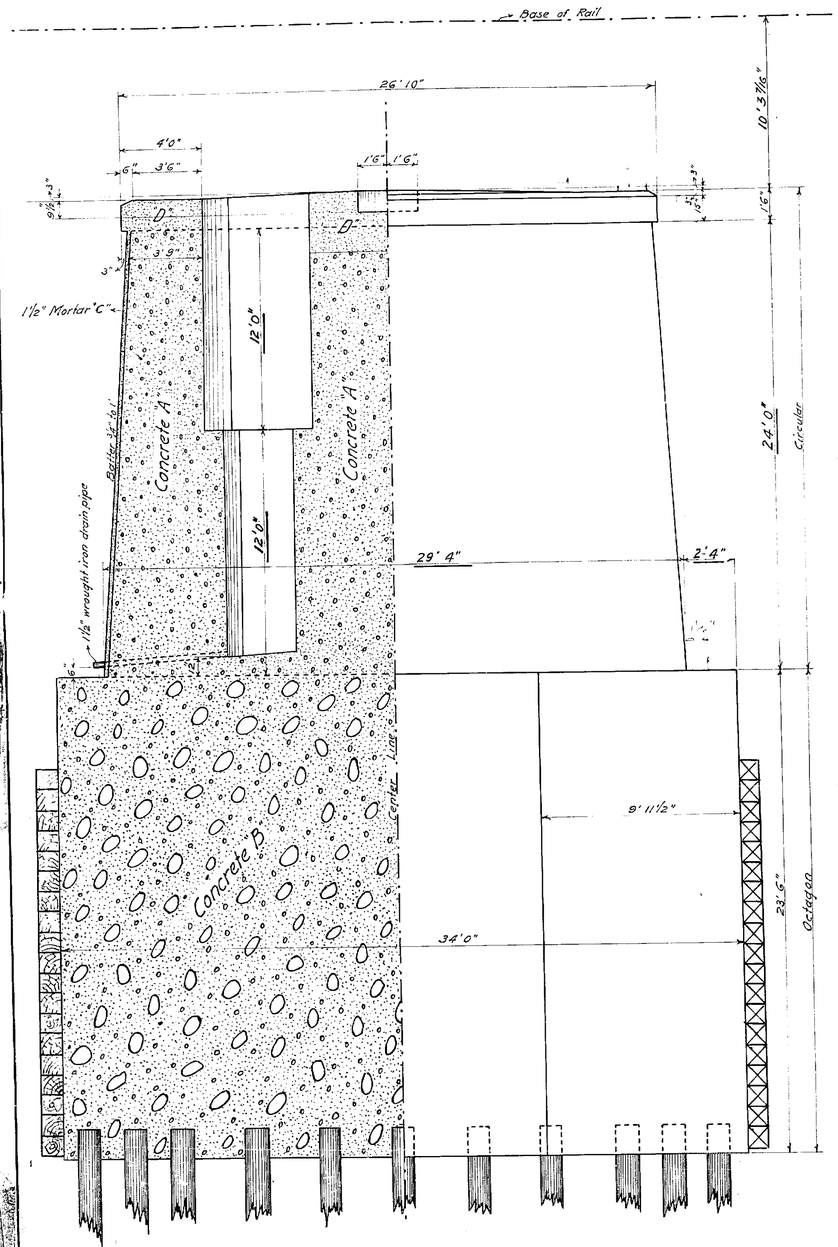

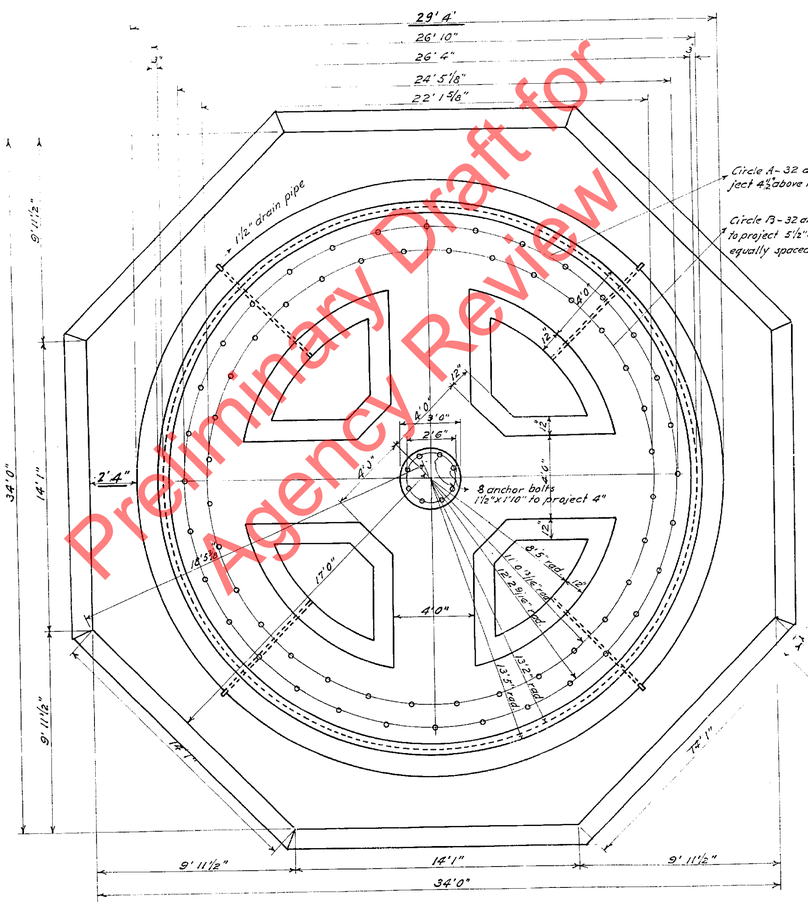

Circle A - 32 anchor bolts 1¼"x1'4" to project 4½" above masonry - equally spaced.

Circle B - 32 anchor bolts 1¼"x1'5½" to project 5½" above masonry - equally spaced.

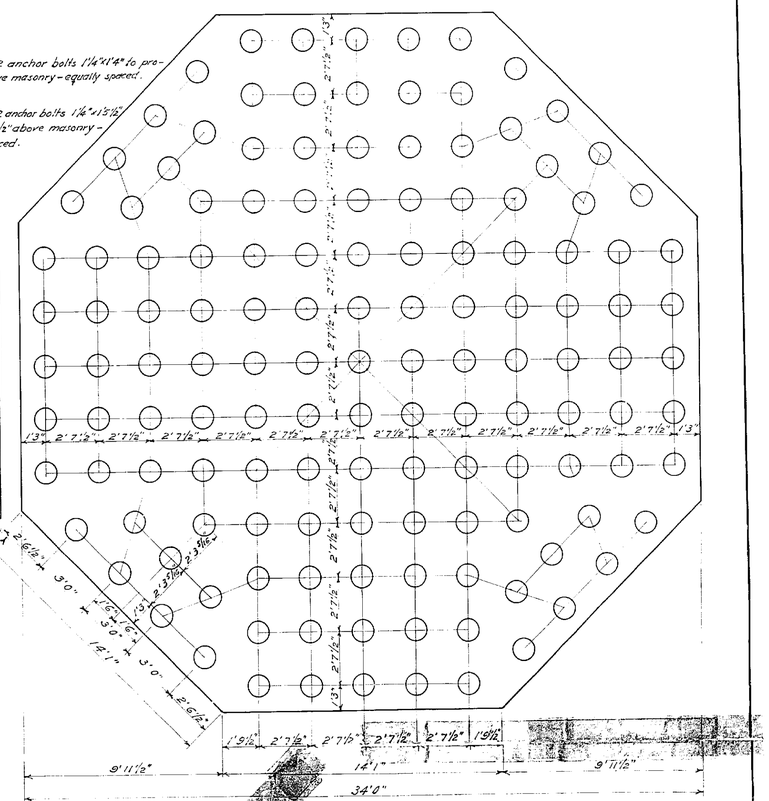

137 piles in foundation.

Concrete Bill for Pier.		
Concrete	"A"	414 cu. yds.
"	"B"	873 " "
Mortar	"C"	10 " "
"	"D"	27 " "
Total	cu. yds.	1324 " "

Note
Piers protected by crib as shown in red.

Note: Underscored figures do not scale.

Preliminary Draft for Agency Review

442-25

Detail of Draw Pier Br. No 33 Sandy Point Bridge - Idaho Div. Main Line.
Complete in 6 sheets. Sheet No 6. Ch. R.T.

USCG0010693/27

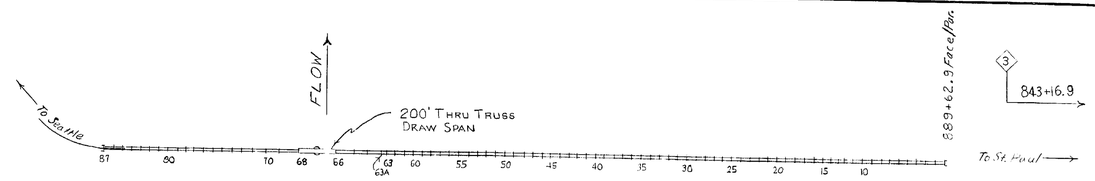

LAKE PEND OREILLE

LAYOUT SKETCH

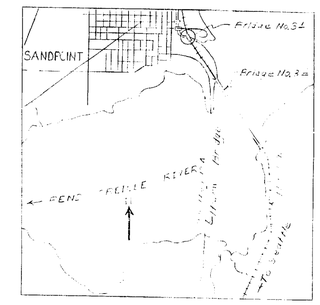

VICINITY MAP

SCALE 1" = 1.5

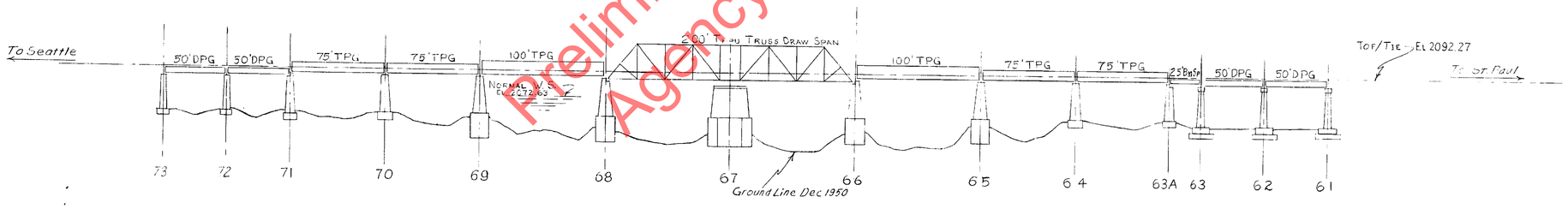

PART ELEVATION PIERS 61 THRU 73

Scale 1" = 50'

Preliminary Draft for Agency Review

REFERENCES:
V. F. 442-25
BR. ENGR. FILE 315

NORTHERN PACIFIC RAILWAY
ENGINEERING DEPARTMENT

IDAHO DIVISION 1ST SUB-DIV. M. L.

BR 32

LAKE PEND OREILLE SANDPOINT, IDAHO

PIERS IN VICINITY OF DRAW SPAN

RECOMMENDED BY: APPROVED BY:

OFFICE OF SCALE: ST. PAUL, MINN. DATE: AUG 28, 1964

DATE	REVISIONS	DR.	CH.	DR.	TR.	CH.
				AFE NO.		
				SHEET 1 OF		FILE NO. 81416

442-25

S.A.A. K+E PHOENIX 8.168 TRACING CLOTH 88242 442-25

USCG0010703/27

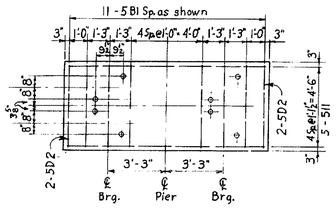

PLAIN PIER TOP

NOTE:
Top Of Even Numbered Piers Shall Be As Shown. See Index 9135B For Details Of Top Of Odd Numbered Piers To Provide Support For Telegraph Posts.

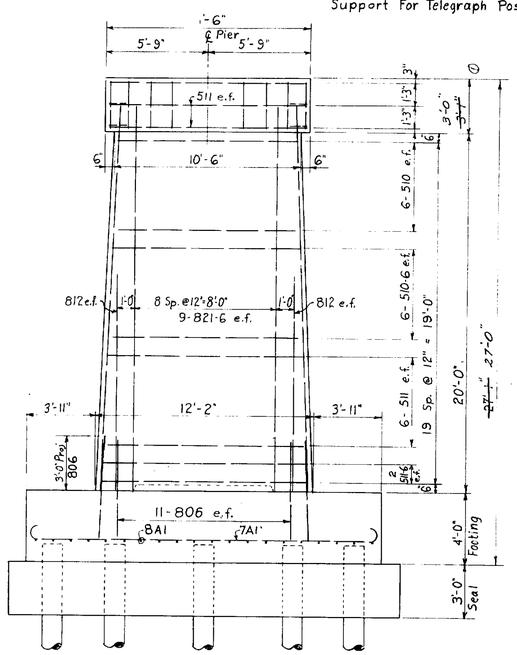

PIER ELEVATION
Looking East

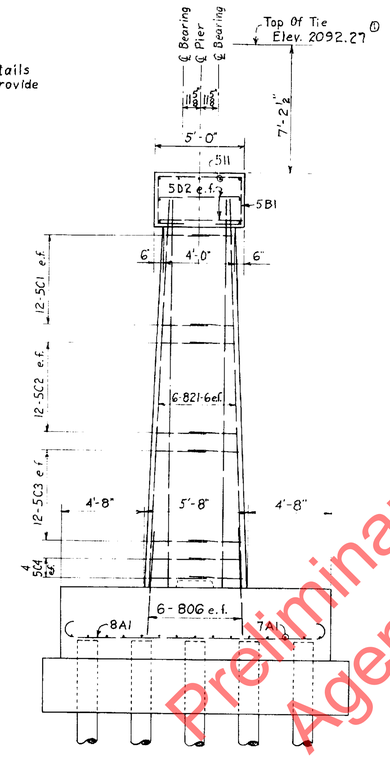

END VIEW

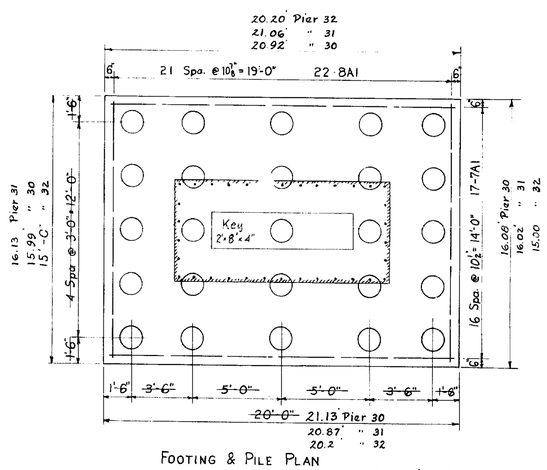

FOOTING & PILE PLAN

See pile driving record for location of piles

PILE LOADS	Max.	Min.
*D.L. Only	9.9 tons	9.9
*D.L.+L.L.	18.6 "	18.6
*D.L.+L.L.+Wind	23.5 "	13.7
*D.L.+L.L.+W.+Traction	31.7 "	5.5
**D.L.+Ice	14.7 "	2.3

*Buoyancy Assumed To El. 2060.5
** " " " El. 2072.5

Elevations Are To N.P.Ry. Datum.
For USGS Datum Subtract 10.1 Ft.

BAR LIST AND BENDING DETAILS

MARK	No. REQ'D* PLAIN PIER	WITH TEL. SUP.	BAR SIZE	LENGTH	TYPE	LOCATION
8A1	22	22	8	16'-6"	A	Footing
7A1	17	17	7	21'-0"	A	"
5B1	11	12	5	12'-6"	B	Coping
5C1	24	20	5	4'-0"	C	Shaft Ends Hor.
5C2	24	24	5	4'-3"	C	" " "
5C3	24	24	5	4'-6"	C	" " "
5C4	8	8	5	4'-9"	C	" " "
5C6	0	4	5	5'-0"	C	Tel. Sup.
5C7	0	4	5	13'-9"	C	" "
5D1	0	6	5	15'-6"	D	" "
5D2	4	2	5	7'-6"	D	Coping End
806	34	34	8	6'-0"	Str.	Dowels
821-6	30	30	8	21'-6"	"	Vert. Shaft
812	4	4	8	12'-0"	"	" "
510	12	8	5	10'-0"	"	Hor. Shaft
510-6	12	12	5	10'-6"	"	" "
511	21	12	5	11'-0"	"	" " & Coping
511-6	4	4	5	11'-6"	"	" "
511-9	0	3	5	11'-9"	"	Coping
503	0	2	5	3'-0"	"	"
502-8	0	4	5	2'-8"	"	"

BENDING DETAILS

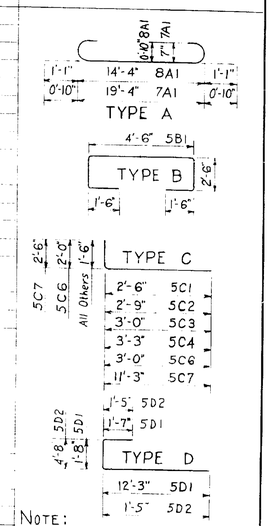

NOTE:
Bent Bar Dimensions Are Out To Out.

*For First Phase ~ 1960 Work:
2 Plain Piers Req'd #30, #32
1 With Tel. Support #31
~~For Second Phase ~ Future Work~~
~~No 27 Ft. Piers Req'd.~~
For Third ~~Phase ~~ Future Work
3 Plain ~~Piers Req'd~~ #24, #26, #28
4 ~~With~~ Tel. Support ~~#23, #25~~, #27, #29

ESTIMATED QUANTITIES 27 FT. PIER

ONE PIER WITH PLAIN TOP

Class "B" Concrete	92 Cu. Yds.
Seal Concrete	42 Cu. Yds.
Reinforcing Steel	5180 Lbs.
Timber Piles - 90 Ft. Lengths	2250 Lin. Ft.
Excavation	70 Cu. Yds.

ONE PIER WITH TELEGRAPH SUPPORT

Class "B" Concrete	93 Cu. Yds.
Seal Concrete	42 Cu. Yds.
Reinforcing Steel	5250 Lbs.
Timber Piles - 90 Ft. Lengths	2250 Lin. Ft.
Excavation	70 Cu. Yds.

CONCRETE NOTES:
N. P. Ry. Co. Specification E-114, Section 13 Shall Govern. Concrete For Pier Shafts And Footings Shall Be Type "B" Air Entrained Concrete Using Type II Low Alkali Cement.

REINFORCEMENT NOTES:
Material Shall Conform To A.S.T.M. Designation A-15 For Intermediate Grade Billet Steel Manufactured By Open Hearth Or Electric Furnace Process, Or Bars May Be Manufactured From Axle Steel At South Tacoma.
Reinforcing Bars Shall Be Formed In Accordance With Current A.S.T.M. Designation A-305.
All Reinforcement Shall Have Minimum Concrete Cover Of 2" Unless Otherwise Noted.

PILING NOTES:
Timber Piles Shall Be Untreated And Shall Conform To N.P.Ry. Specification E-117 Except Tip Dia. To Be 8". Pile Length In Place Shall Be 90 Ft. Below Cutoff. No Splicing Of Piles Will Be Permitted. Followers Will Not Be Permitted Without The Permission Of The Engineer. If Followers Are To Be Used, Plan Must Be Submitted To Bridge Engineer For Approval.

ANCHOR BOLTS:
3" Dia. Holes For Setting Anchor Bolts May Be Located And Drilled In Concrete Before Shifting 50 Ft. Spans, Or 1⅜" Dia. Holes May Be Drilled With Spans In Relocated Positions. Anchor Bolts Will Be Set And Grouted In With Spans In Final Position.

QUANTITIES AS BUILT		Pier 30	Pier 31	Pier 32
Class B Concrete	c.y.	97.07	98.08	92.01
Seal Concrete	c.y.	47.15	47.15	47.15
Reinforcing Steel	lbs.	5289.70	5354.80	5289.70
Timber Piling below C.O	L.Ft.	2215	2210	2225
Excavation	c.y.	60.9	55.4	51.3

NORTHERN PACIFIC RAILWAY
ENGINEERING DEPARTMENT
IDAHO DIVISION 1ST SUB-DIV. M. L.
BRIDGE 3.2
SANDPOINT, IDAHO 30
27 FOOT HIGH PIER FOR PIERS ~~23~~ THRU 32

RECOMMENDED BY: APPROVED BY:
SCALE: ¼" = 1'-0"
OFFICE OF BRIDGE ENGINEER ST. PAUL, MINN. DATE: May 23, '60

DATE	REVISIONS	DR.	CH.
1-18-61	Changed T/T & T/Coping	d	
11-17-61	As constructed	EAL	JWD

DR. JWD TR. CH. d 5-23-60
AFE NO. 432-60 INDEX NO. 91356
SHEET OF FILE NO.

Preliminary Draft for Agency Review

ACS-SAA

442-25A

USCG0010713/27

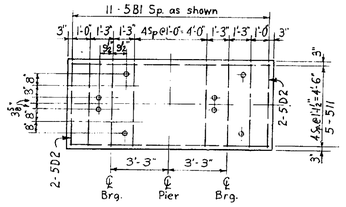

PLAIN PIER TOP

NOTE:
Top Of Even Numbered Piers Shall Be As Shown. See Index 91358 For Details Of Top Of Odd Numbered Piers To Provide Support For Telegraph Posts.

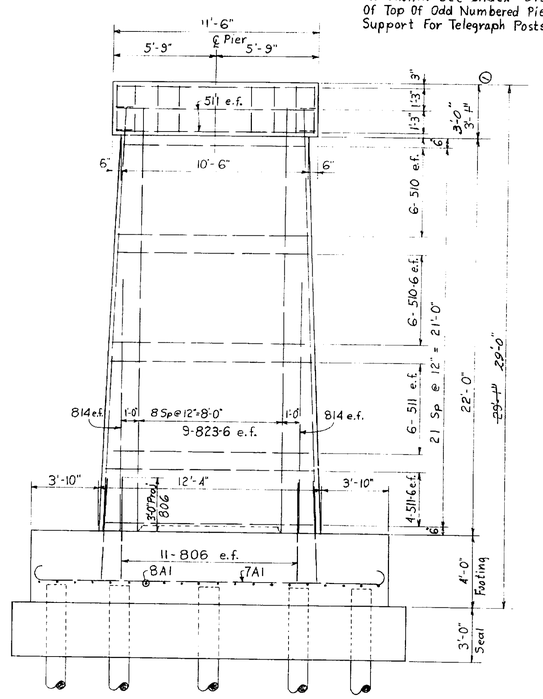

PIER ELEVATION
(Looking East)

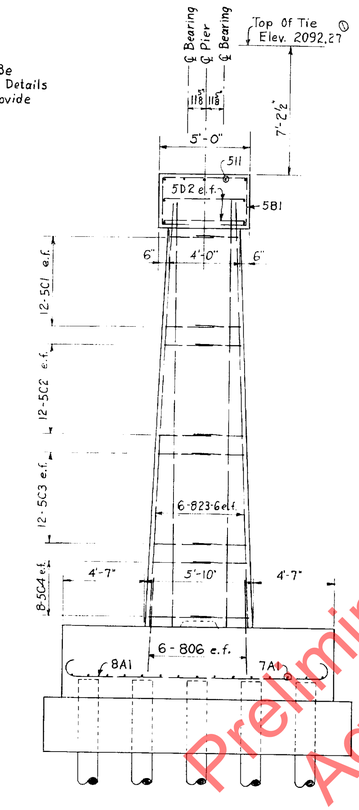

END VIEW

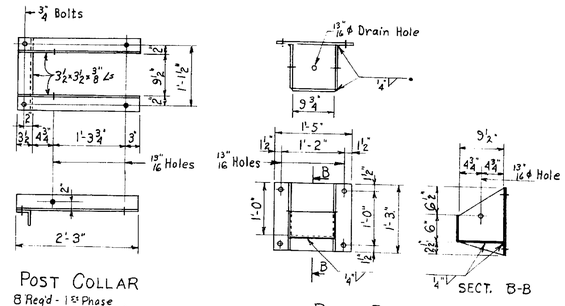

POST COLLAR
8 Req'd - 1st Phase
9 " 2nd "
9 " 3rd "
Wt. 50 lbs. each

Galvanize After Fabrication
3/4" = 1'-0"

POST BRACKET
½" Plates Thru out
8 Req'd. 1st Phase
9 " 2nd "
9 " 3rd "
Wt. 92 lbs. each

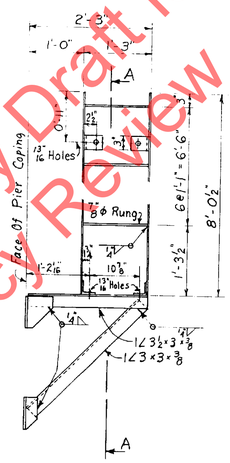

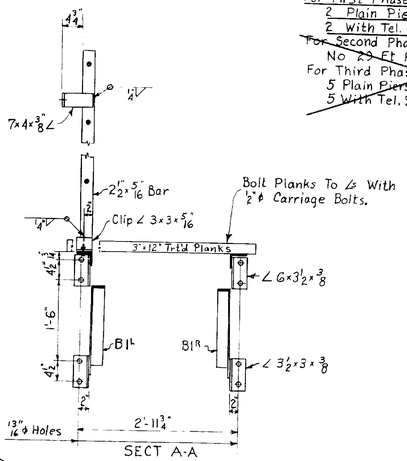

Bolt Planks To ∠s With ½" ϕ Carriage Bolts.

SECT A-A

LADDER AND PLATFORM
Galvanize After Fabrication
9 Req'd. 1st Phase
8 " 2nd "
8 " 3rd "
3/4" = 1'-0"

Est. Wt. One Ladder And Platform 175 lbs.

BAR LIST AND BENDING DETAILS

MARK	NO. REQ'D* PLAIN PIER	WITH TEL. SUP.	BAR SIZE	LENGTH	TYPE	LOCATION
8A1	22	22	8	16'-6"	A	Footing
7A1	17	17	7	21'-0"	A	"
5B1	11	12	5	12'-6"	B	Coping
5C1	24	20	5	4'-0"	C	Shaft Ends Hor.
5C2	24	24	5	4'-3"	C	" " "
5C3	24	24	5	4'-6"	C	" " "
5C4	16	16	5	4'-9"	C	" " "
5C6	0	4	5	5'-0"	C	Tel. Sup.
5C7	0	4	5	13'-9"	C	" "
5D1	0	6	5	15'-6"	D	" "
5D2	4	2	5	7'-6"	D	Coping End
806	34	34	8	6'-0"	Str.	Dowels
823-6	30	30	8	23'-6"	"	Vert. Shaft
814	4	4	8	14'-0"	"	" "
510	12	8	5	10'-0"	"	Hor. Shaft
510-6	12	12	5	10'-6"	"	" "
511	21	12	5	11'-0"	"	" " & Coping
511-6	8	8	5	11'-6"	"	" "
511-9	0	3	5	11'-9"	"	Coping
503	0	2	5	3'-0"	"	"
502-8	0	4	5	2'-8"	"	"

BENDING DETAILS

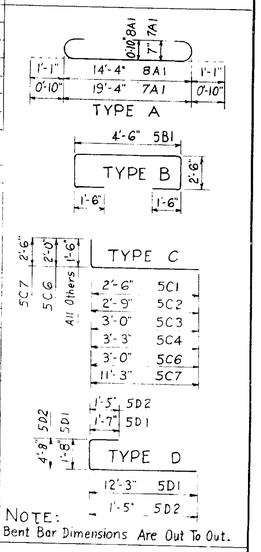

NOTE:
Bent Bar Dimensions Are Out To Out.

*For First Phase ~ 1960 Work
2 Plain Piers Req'd. #34, #36
2 With Tel. Support #33, #35
~~For Second Phase ~ Future Work~~
No ~~29 Ft Piers~~
For Third Phase ~~Future Work~~
~~5 Plain Piers Req'd. #13, #15, #17, #19, #21~~
~~5 With Tel. Support #14, #16, #18, #20, #22~~

ESTIMATED QUANTITIES 29 FT. PIER

ONE PIER WITH PLAIN TOP

Class "B" Concrete	97 Cu. Yds.
Seal Concrete	42 Cu. Yds.
Reinforcing Steel	5450 Lbs.
Timber Piles 90 Ft. Lengths	2250 Lin. Ft.
Excavation	70 Cu. Yds.

ONE PIER WITH TELEGRAPH SUPPORT

Class "B" Concrete	98 Cu. Yds.
Seal Concrete	42 Cu. Yds.
Reinforcing Steel	5510 Lbs.
Timber Piling 90 Ft Lengths	2250 Lin. Ft.
Excavation	70 Cu. Yds.

For General Concrete, Reinforcing And Pile Notes See Index 91356.

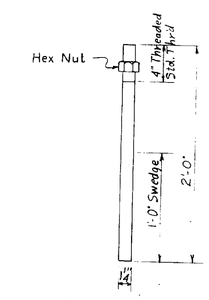

ANCHOR BOLT
128 Req'd. 1st Phase
136 " 2nd "
136 " 3rd "
Wt. 9 lbs. each

QUANTITIES AS BUILT		Pier 33	Pier 34	Pier 35	Pier 36
Class B Concrete	c.y.	100.95	99.28	101.62	100.55
Seal Concrete	c.y.	47.15	47.15	47.15	47.15
Reinforcing Steel	lb	5624.0	5558.9	5624.0	5558.9
Timber Piling below C.O	L.F.	2220	2225	2255	2252
Excavation	c.y.	77.6	69.3	56.8	49.9

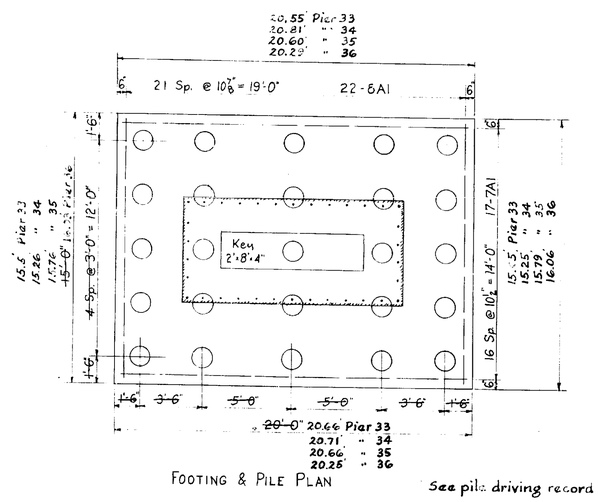

FOOTING & PILE PLAN

See pile driving record for location of piles.

PILE LOADS

	Max.	Min.
*D.L. Only	10.1 tons	10.1
*D.L.+L.L.	18.9 "	18.9
*D.L.+L.L.+Wind	23.9 "	13.9
*D.L.+L.L.+W.+Traction	32.9 "	4.9
**D.L.+Ice	17.1 "	3.1

*Buoyancy Assumed To El. 2060.5
** " " " El. 2072.5

Elevations Are To N.P.Ry. Datum.
For USGS Datum Subtract 10.1 Ft.

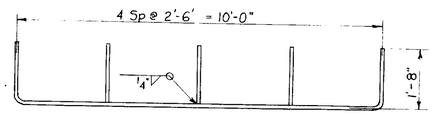

ACCESS RUNG
Make From 1⅛" Dia. ~~Deformed~~ Bars
Galvanize After Fabrication
17 Req'd 1st Phase
17 " 2nd "
17 " 3rd "

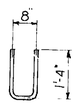

LADDER RUNG
⅞" ϕ Deformed Bars
Galvanize After Fabrication.
136 Req'd. 1st Phase
136 " 2nd "
136 " 3rd "

NOTE:
Galvanizing Shall Conform To A.S.T.M. Designation A153-59 Class B-1.

NORTHERN PACIFIC RAILWAY
ENGINEERING DEPARTMENT
IDAHO DIVISION 1ST SUB-DIV. M. L.
BRIDGE 3.2
SANDPOINT, IDAHO
29 FOOT HIGH PIER FOR PIERS ~~13 THRU 22~~ & 33 THRU 36

RECOMMENDED BY: APPROVED BY:

SCALE: ¼" = 1'-0" ~ Piers
OFFICE OF BRIDGE ENGINEER ST. PAUL, MINN. DATE: May 23, 1960

DATE	REVISIONS	DR.	CH.
1-18-61	Rev. T/T & T/Coping	d	
11-17-61	As constructed	EAL	JWD

DR. JWD TR. CH. 5-23-60
AFE NO. 432-60
INDEX NO. 91357
SHEET OF FILE NO.

Preliminary Draft for Agency Review

USCG0010723/27

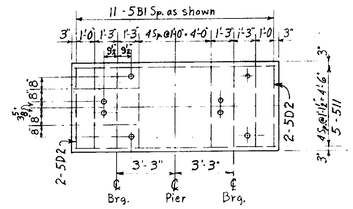

PLAIN PIER TOP

NOTE:
Top Of Even Numbered Piers Shall Be As Shown.

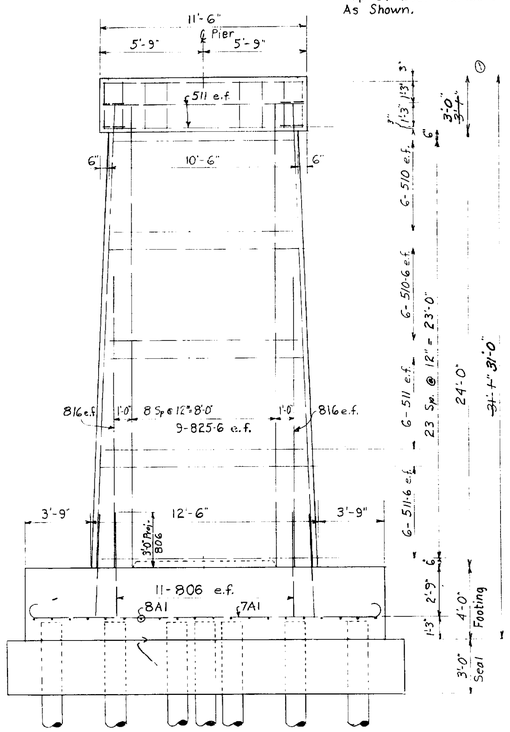

PIER ELEVATION
(Looking East)

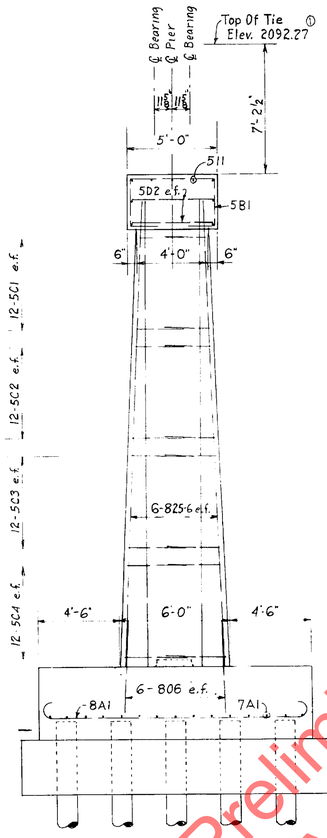

END VIEW

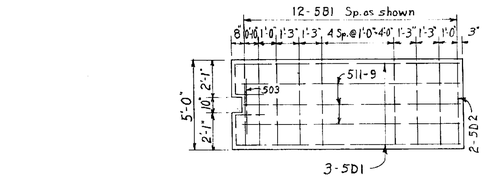

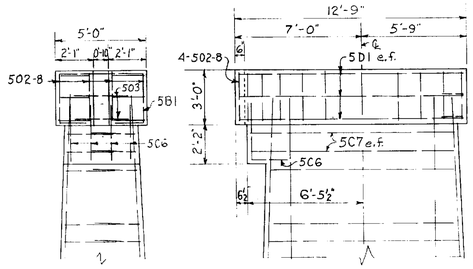

PIER TOP DETAIL WITH TELEGRAPH SUPPORT
To Be Used For Odd Numbered Piers

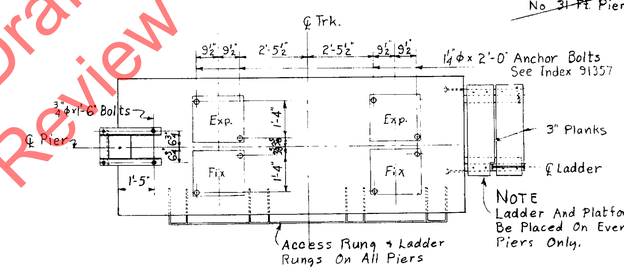

NOTE
Ladder And Platform To Be Placed On Even Numbered Piers Only.

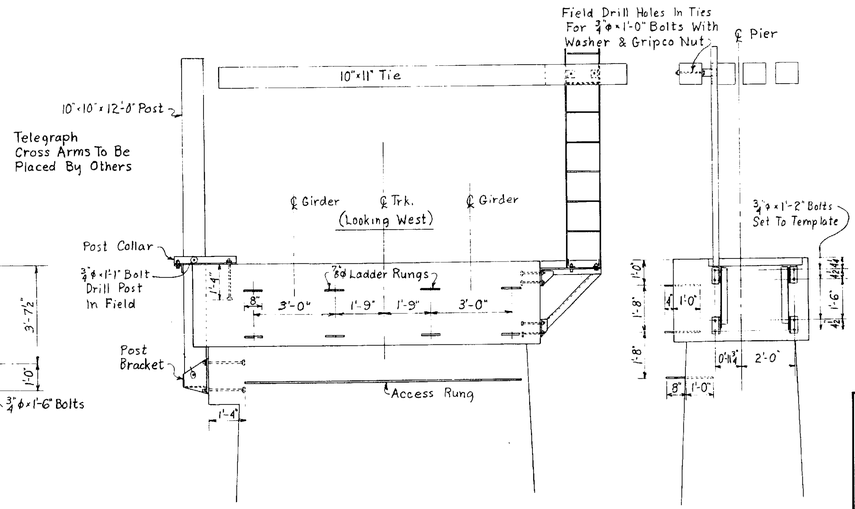

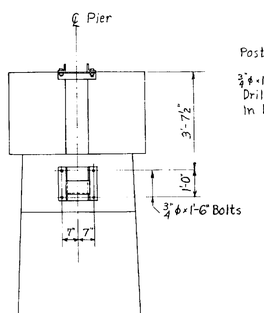

LOCATION OF HARDWARE ON PIER TOPS
See Index 91357 For Details Of Hardware.

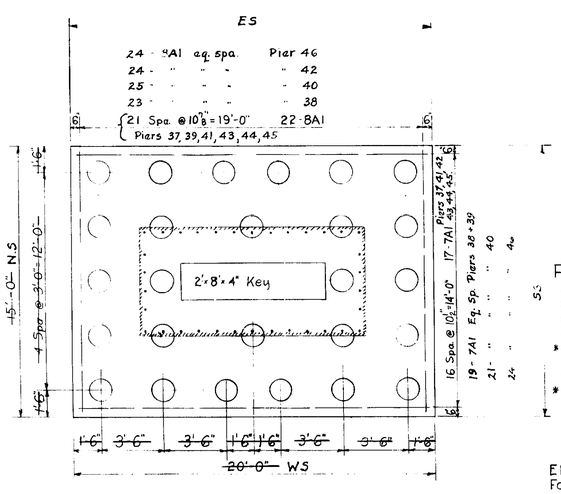

ES = Pier 37 - 20.81'
" 38 21.26'
" 39 21.23'
" 40 21.12'
" 41 21.27'
" 42 21.02'
" 43 20.52'
" 44 20.42'
" 45 20.52'
" 46 20.99'

NS - Pier 37 - 16.07'
" 38 16.22'
" 39 15.93'
" 40 16.55'
" 41 15.56'
" 42 16.23'
" 43 16.07'
" 44 15.72'
" 45 15.47'
" 46 15.92'

WS - Pier 37 20.87'
" 38 21.42'
" 39 21.19'
" 40 21.11'
" 41 21.19'
" 42 21.02'
" 43 20.62'
" 44 20.45'
" 45 20.57'
" 46 20.45'

SS = Pier 37 - 16.07'
" 38 16.36'
" 39 15.86'
" 40 16.31'
" 41 15.49'
" 42 16.15'
" 43 16.02'
" 44 15.70'
" 45 15.42'
" 46 15.94'

FOOTING & PILE PLAN

See pile driving record for location of piles

PILE LOADS

	Max.		Min.
*D.L. Only	9.6	tons	9.6
*D.L.+L.L.	18.3	"	18.3
*D.L.+L.L.+Wind	24.2	"	12.2
*D.L.+L.L.+W.+Traction	33.7	"	2.9
**D.L.+Ice	17.2	"	2.0

*Buoyancy Assumed To El. 2060.5
** " " " El. 2072.5

Elevations Are To N.P.Ry. Datum.
For USGS Datum Subtract 10.1 Ft.

BAR LIST AND BENDING DETAILS

Mark	No. Req'd Plain Pier	No. Req'd With Tel. Sup.	Bar Size	Length	Type	Location
8A1	22	22	8	16'-6"	A	Footing
7A1	17	17	7	21'-0"	A	"
5B1	11	12	5	12'-6"	B	Coping
5C1	24	20	5	4'-0"	C	Shaft Ends Hor.
5C2	24	24	5	4'-3"	C	" " "
5C3	24	24	5	4'-6"	C	" " "
5C4	24	24	5	4'-9"	C	" " "
						" " "
5C6	0	4	5	5'-0"	C	Tel. Sup.
5C7	0	4	5	13'-9"	C	
5D1	0	6	5	15'-6"	D	
5D2	4	2	5	7'-6"	D	Coping End
806	34	34	8	6'-0"	Str.	Dowels
825-6	30	30	8	25'-6"	"	Vert. Shaft
816	4	4	8	16'-0"	"	" "
510	12	8	5	10'-0"	"	Hor. Shaft
510-6	12	12	5	10'-6"	"	" "
511	21	12	5	11'-0"	"	" " & Coping
511-6	12	12	5	11'-6"	"	" "
511-9	0	3	5	11'-9"	"	Coping
503	0	2	5	3'-0"	"	"
502-8	0	4	5	2'-8"	"	"

BENDING DETAILS

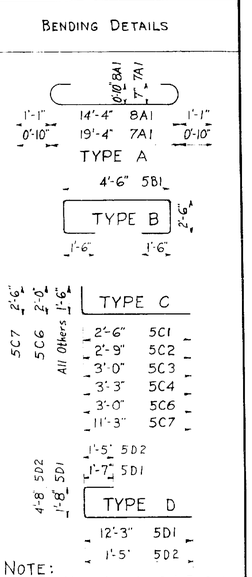

NOTE:
Bent Bar Dimensions Are Out To Out.

* For First Phase ~ 1960 Work:
5 Plain Piers Req'd. #38, #40, #42, #44, #46
5 With Tel. Support #37, #39, #41, #43, #45
For ~~Second Phase ~ Future Work~~
4 Plain Piers Req'd. #48, #50, #52, #54
4 With Tel. Support #47, #49, #51, #53
For Third Phase ~ Future Work
No ~~31 Ft.~~ Piers Req'd.

ESTIMATED QUANTITIES 31 FT. PIER

ONE PIER WITH PLAIN TOP

Class 'B' Concrete	103 Cu. Yds.
Seal Concrete	42 Cu. Yds.
Reinforcing Steel	5710 Lbs.
Timber Piles - 90 Ft. Lengths	2340 Lin. Ft.
Excavation	70 Cu. Yds.

ONE PIER WITH TELEGRAPH SUPPORT

Class 'B' Concrete	104 Cu. Yds.
Seal Concrete	42 Cu. Yds.
Reinforcing Steel	5780 Lbs.
Timber Piles - 90 Ft. Lengths	2340 Lin. Ft.
Excavation	70 Cu. Yds.

For General Concrete, Reinforcing And Pile Notes See Index 91356.

Detail Material Required

Item	Size	1st Phase	2nd Phase	3rd Phase
Post Collar	Complete	8		
" Bracket	"	8		
Anchor Bolts	¾"Φ x 1'-6"	48		
M. Bolts (Posts)	¾"Φ x 1'-1"	16		
Platform Bracket	BIL	9		
" "	BIR	9		
Ladders	"	9		
Anchor Bolts	¾"Φ x 1'-2"	72		
M. Bolts (Ladder)	" x 2½"	18		
M. Bolts (Ladder)	" x 1'-0"	18		
Carriage Bolts	½"Φ x 4½"	72		
Gripco Nuts	¾" Bolts	172		
Spring Lock Washers	"	172		
Gripco Nuts	½" Bolts	72		
Spring Lock Washers	"	72		
Trt'd Platform Plank	3"x12"x3'-6"	18		
Access Rung	⅝"Φ	17		
Ladder Rung	⅝"Φ	136		
Telegraph Posts - Trt'd.	10"x10"x12'-0" S4S to 9½"	8		
Anchor Bolts - (Brass)	1¼"Φ x 2'-0"	136		

QUANTITIES AS BUILT

		Pier 37	Pier 38	Pier 39	Pier 40	Pier 41	Pier 42	Pier 43	Pier 44	Pier 45	Pier 46
Class B Concrete	c.y	108.03	108.50	108.37	108.91	107.25	107.85	107.32	105.95	105.41	106.10
Seal Concrete	c.y.	47.15	47.15	47.15	47.15	47.15	47.15	47.15	47.15	47.15	47.15
Reinforcing Steel	Lbs	5893.2	5958.0	5979.0	6131.9	5893.2	5916.2	5893.2	5828.1	5893.2	6216.7
Timber piling below C.O	L.Ft	2329	2314	2352	2352	2344	2353	2356	2369	2359	2343
Excavation	c.y	56.8	49.9	45.7	62.3	55.4	49.9	48.5	48.5	45.7	42.9

NORTHERN PACIFIC RAILWAY
ENGINEERING DEPARTMENT
IDAHO DIVISION 1ST SUB-DIV. M. L.
BRIDGE 3.2
SANDPOINT, IDAHO
31 FOOT HIGH PIER FOR PIERS 37 THRU ~~54~~ 46

RECOMMENDED BY: APPROVED BY:

SCALE: ¼" = 1'-0"
OFFICE OF BRIDGE ENGINEER ST. PAUL, MINN. DATE: May 23, 1960

DATE	REVISIONS	DR.	CH.
1-18-61	Rev. T/T & T/Coping	EAL	JWD
11-17-61	As constructed		

DR. JWD TR. CH. JWD 5-25-60
AFE NO. INDEX NO. 91358
SHEET OF FILE NO.

442-25A

Preliminary Draft for Agency Review

GENERAL NOTES:

GENERAL: ALL MATERIAL AND WORKMANSHIP SHALL BE AS PER THE CURRENT A.R.E.M.A. MANUALS FOR RAILWAY ENGINEERING: CHAPTER 8 - CONCRETE STRUCTURES AND FOUNDATIONS, CHAPTER 15-STEEL STRUCTURES.

THE BNSF STANDARD CONSTRUCTION SPECIFICATIONS SUPPLEMENT THE ABOVE A.R.E.M.A. MANUALS AND SHALL GOVERN.

CONSTRUCTION EQUIPMENT: CONTRACTOR IS REQUIRED TO ALLOCATE A MINIMUM OF THREE CRANES TO THE PROJECT THAT ARE CAPABLE OF DRIVING PILES AND SETTING NEW STEEL SPANS. ALL CRANES SHALL BE SIZED TO ALLOW FOR THE HANDLING OF 120-FEET LENGTH OF PIPE PILE UNDER THE BOOM.

PILING: PILES SHALL MEET THE MATERIAL REQUIREMENTS OF ASTM A500, GR. B OR APPROVED EQUIVALENT, AND SHALL BE DRIVEN IN ACCORDANCE WITH THE BNSF STANDARD SPECIFICATIONS. ALL PILES SHALL HAVE A STEEL CONICAL TIP WITH DULL POINT WELDED TO THE PILE ON THE TIP END. PIPE PILES SHALL BE DRIVEN WITH A PILE TEMPLATE AND AS NOTED IN THE PROJECT TECHNICAL SPECIFICATION SECTION 4210 AND AS DETERMINED BY THE ENGINEER.

AFTER PIER PILES ARE DRIVEN, THEY SHALL BE PULLED, IF NECESSARY, AND HELD IN THE PROPER LOCATION AND CUT OFF AT THE PROPER ELEVATION. THE DESIGNATED REINFORCING CAGE SHALL BE CENTERED IN EACH PILE WITH THE TIP OF CAGE FLUSH WITH THE TOP OF PILE. EACH PILE SHALL THEN BE FILLED WITH CONCRETE HAVING AN ULTIMATE COMPRESSIVE STRENGTH OF NOT LESS THAN 4000 p.s.i. IN 28 DAYS, AND MAXIMUM SIZE OF COARSE AGGREGATE SHALL BE ONE INCH. THE PIER PILES SHALL CONTINUE BEING HELD UNTIL THE PRECAST CAPS HAVE BEEN SET AND CONNECTION BARS WELDED TO PILE PLATES AND PILES.

CHANNEL BRACING SHOWN ON SHEET 15 OF 37 SHALL BE INSTALLED AND CONCRETE TEST VERIFYING 4000 PSI CONCRETE STRENGTH SHALL BE CONDUCTED PRIOR TO PIER PILES RECEIVING LIVE LOAD.

DECK PLATES: THE DECK PLATES SHALL BE ADJUSTED AS NECESSARY TO INSURE THE PLATES FIT TIGHT AGAINST THE BEAMS AND CURBS.

REINFORCEMENT: UNLESS NOTED OTHERWISE, STEEL BARS FOR REINFORCEMENT SHALL BE DEFORMED BILLET -STEEL BARS CONFORMING TO THE REQUIREMENTS OF THE CURRENT ASTM DESIGNATION: A615 OR A706, GRADE 60.

FABRICATION OF REINFORCEMENT SHALL BE IN ACCORDANCE WITH CHAPTER 7 OF THE CURRENT C.R.S.I. MANUAL OF STANDARD PRACTICE.

REINFORCEMENT WIRE BAR SUPPORTS THAT ARE IN CONTACT WITH FORMS SHALL BE CLASS 1, PLASTIC PROTECTED, IN ACCORDANCE WITH CHAPTER 3 OF THE CURRENT C.R.S.I. MANUAL OF STANDARD PRACTICE.

REPAIR OF DAMAGED GALVANIZED SURFACES: DAMAGED GALVANIZED SURFACES SHALL BE THOROUGHLY CLEANED TO REMOVE ALL CONTAMINANTS INCLUDING WELD-SLAG, WELD SPATTER AND RUST AND SHALL THEN BE PAINTED WITH TWO COATS OF ZINC DUST - ZINC OXIDE, TYPE 1, LINSEED OIL PAINT MEETING FEDERAL SPECIFICATION TT-P-641.

ELASTOMERIC BEARING PADS: ELASTOMERIC BEARING PADS SHALL BE IN ACCORDANCE WITH SECTION 04900 OF THE BNSF STANDARD CONSTRUCTION SPECIFICATIONS.

HANDRAIL: HANDRAIL PANELS ON WALKWAYS SHALL BE ERECTED PLUMB AND IN LINE.

ERECTION OF DOUBLE VOIDED BOX BEAMS: BOX BEAMS SHALL BE SET IN THE PROPER LOCATION USING CARE NOT TO DAMAGE CONCRETE MEMBERS. AFTER BEAMS ARE SET, LIFTING LOOPS SHALL BE REMOVED IN FIELD FLUSH WITH ABOVE CONCRETE SURFACE. REMAINING PORTION OF LIFTING LOOPS ARE TO BE COATED WITH PAINT. PATCH RECESSES, IF NECESSARY, AROUND LIFTING LOOPS WITH EPOXY MORTAR AS USED FOR SETTING BEAMS.

MORTAR FOR SETTING DOUBLE VOIDED BOX BEAMS: BOX BEAMS SHALL HAVE FULL AND EVEN BEARING UPON THE BRIDGE SEAT AREAS. IF NEEDED, MORTAR CONSISTING OF EQUAL PARTS BY VOLUME OF CLASS B EPOXY AND DRY SILICA SAND, MIXED IN ACCORDANCE WITH MANUFACTURER'S DIRECTIONS, SHALL BE SPREAD ON TOP OF BEARING PADS TO OBTAIN UNIFORM BEARING. SCRAPE EXCESS MORTAR FROM AROUND BEARING PADS AFTER BEAMS ARE SET.

CAST-IN-PLACE CONCRETE: ALL CONCRETE, CONCRETE WORK AND PLACEMENT OF REINFORCEMENT SHALL BE IN ACCORDANCE WITH SECTION 04400 OF THE BNSF STANDARD CONSTRUCTION SPECIFICATIONS.

THE PORTLAND CEMENT USED IN ALL CONCRETE SHALL BE TYPE II OR TYPE IIA. ALL CONCRETE SHALL BE AIR-ENTRAINED CONTAINING NOT LESS THAN 5 PERCENT NOR MORE THAN 7 PERCENT AIR BY VOLUME.

CONCRETE SHALL BE CLASS 40 WITH AN ULTIMATE COMPRESSIVE STRENGTH OF NOT LESS THAN 4000 PSI IN 28 DAYS. MAXIMUM SIZE OF COURSE AGGREGATE SHALL BE ONE INCH. THE MINIMUM CONCRETE COVER ON REINFORCEMENT SHALL BE TWO INCHES UNLESS INDICATED OTHERWISE. EXPOSED CONCRETE EDGES SHALL BE BEVELED $^3/_4$".

EXISTING SUPERSTRUCTURE AND PIER REMOVAL: AFTER THE NEW PIPE PILES AND PIER CAPS ARE IN PLACE, THE CONTRACTOR SHALL REMOVE AND DISPOSE OF EXISTING SUPERSTRUCTURE SPANS 71 THRU 86. SEE EXISTING DRAWINGS "DETAILS OF 50'-0" DECK PLATE GIRDER" (DATED OCTOBER 27, 1903) AND "24 FT. BEAM SPAN AND BEARINGS FOR 50 FT. SPANS" (DATED NOVEMBER 17, 1961) FOR DETAILS OF EXISTING SUPERSTRUCTURE SPANS 71 THRU 86.

AFTER THE NEW BRIDGE IS CONSTRUCTED, THE CONTRACTOR SHALL REMOVE ALL PORTIONS OF EXISTING PIERS 72 THRU 86 TO THE EXISTING GROUNDLINE. SEE EXISTING DRAWING "DETAIL OF PIERS NO. 2 THRU 12 INCL., 84 TO 86 INCL." (DATED APRIL 11, 1902) AND "DETAILS OF ABUTMENTS AND PIERS NO. 72 TO 83 INCL." FOR DETAILS OF EXISTING PIERS 72 THRU 86.

UPON REMOVAL OF THE EXISTING SUPERSTRUCTURE AND PIERS, ALL REMOVAL MATERIAL SHALL BECOME PROPERTY OF THE CONTRACTOR. THE CONTRACTOR SHALL BE RESPONSIBLE FOR DISPOSING OF ALL REMOVAL MATERIAL IN ACCORDANCE WITH ALL LOCAL, COUNTY, STATE, AND OTHER REQUIREMENTS AND LAWS AS APPLICABLE. ALL REMOVAL WORK SHALL BE DONE IN ACCORDANCE WITH SPECIAL PROVISION 04010 IN IN THE PROJECT MANUAL.

PLACING PRECAST CONCRETE BEARING BLOCK ON EXISTING ABUTMENT: PRIOR TO PLACING BEARING BLOCK AT THE EXISTING ABUTMENT, THE CONTRACTOR SHALL FIELD VERIFY THE ELEVATION OF THE TOP OF THE EXISTING BEARING SEAT AFTER REMOVAL OF GROUT PADS AND ADDITION OF INFILL CONCRETE, AND SHALL VERIFY THAT THE EXISTING BEARING SEAT IS LEVEL. THE CONTRACTOR SHALL NOTIFY THE ENGINEER OF ANY VARIANCES.

TOP OF EXISTING BEARING SEAT SHALL BE THOROUGHLY CLEANED TO REMOVE ALL LOOSE PARTICLES AND DUST. PRECAST CONCRETE BEARING BLOCK SHALL THEN BE SET ON TOP OF THE EXISTING ABUTMENT BEARING SEAT, WITH THE TOP OF BEARING BLOCK LEVEL AT THE CORRECT ELEVATION, USING EPOXY MORTAR AS NECESSARY TO COMPLETELY FILL ANY VOID BETWEEN THE BOTTOM OF BEARING BLOCK AND EXISTING BEARING SEAT. EPOXY MORTAR SHALL CONSIST OF EQUAL PARTS OF CLASS B GEL TYPE EPOXY AND DRY SILICA SAND MIXED IN ACCORDANCE WITH THE MANUFACTURERS DIRECTIONS. THROUGH 2" DIA. HOLES IN BEARING BLOCK, DRILL $1^3/_4$" DIA. HOLES INTO THE ABUTMENT SEAT TO A DEPTH OF 5'-$6^1/_2$" BELOW TOP OF BEARING BLOCK. THROUGH $1^1/_2$" DIA. HOLES IN BEARING BLOCK, DRILL $1^1/_4$" DIA. HOLES INTO THE ABUTMENT BACKWALL TO A DEPTH OF 3'-6" FROM THE FRONT FACE OF THE BEARING BLOCK. HOLES SHALL BE THOROUGHLY CLEANED USING A WIRE BRUSH AND COMPRESSED AIR OR VACUUMING TO REMOVE ALL LOOSE PARTICLES AND DUST. THEN #10 X 5'-6" DOWELS AND #6 X 3'-6" SHALL BE SET IN THEIR RESPECTIVE HOLES THROUGH THE BEARING BLOCK USING EPOXY GROUT, IN ACCORDANCE WITH MANUFACTURER'S RECOMMENDATIONS, TO COMPLETELY FILL THE VOIDS.

PLACING PRECAST CONCRETE BEARING BLOCK ON PRECAST CAP AT PIERS 72 AND 87: TOP OF PIER 72 AND 87 PRECAST CONCRETE CAP SHALL BE THOROUGHLY CLEANED TO REMOVE ALL LOOSE PARTICLES AND DUST. THE PRECAST BEARING BLOCK SHALL THEN BE SET ON TOP OF PRECAST CONCRETE CAP AT PIER 72 AND 87, WITH THE TOP OF BEARING BLOCK LEVEL AT THE CORRECT ELEVATION. LINE UP 2" DIA. HOLES IN BEARING BLOCK WITH 2" DIA. BLOCKOUTS IN PRECAST CAP. HOLES SHALL BE THOROUGHLY CLEANED USING A WIRE BRUSH AND COMPRESSED AIR OR VACUUMING TO REMOVE ALL LOOSE PARTICLES AND DUST. THEN #10 X 5'-1" DOWELS SHALL BE SET IN HOLES THROUGH BEARING BLOCK USING EPOXY GROUT, IN ACCORDANCE WITH MANUFACTURER'S RECOMMENDATIONS, TO COMPLETELY FILL THE VOIDS.

PLACING PRECAST CONCRETE BEARING BLOCK ON EXISTING PIER 71: PRIOR TO PLACING THE BEARING BLOCK AT EXISTING PIER 71, THE CONTRACTOR SHALL FIELD VERIFY THE ELEVATIONS OF THE TOP OF THE EXISTING PIER AND THE HORIZONTAL DIMENSION OF THE LOWER SEAT. THE CONTRACTOR SHALL INSTALL THE CAST-IN-PLACE BEARING BLOCKS ON THE FIELD EDGES OF THE PIER, PRIOR TO REMOVAL OF THE SPAN, AS DETAILED ON SHEET 16 OF 37. ONCE THE SPAN IS REMOVED, THEN FILL AND LEVEL THE EXISTING BEARING SEAT TO PROVIDE THE TOP OF BLOCK THE ELEVATION INDICATED ON SHEET 16 OF 37. THE CONTRACTOR SHALL NOTIFY THE ENGINEER OF ANY VARIANCES IN ELEVATION PRIOR TO PLACING THE BEARING BLOCK.

TOP OF EXISTING BEARING SEAT SHALL BE THOROUGHLY CLEANED TO REMOVE ALL LOOSE PARTICLES AND DUST. PRECAST CONCRETE BEARING BLOCK SHALL THEN BE SET ON TOP OF THE EXISTING PIER SEAT, WITH THE TOP OF BEARING BLOCK LEVEL AT THE CORRECT ELEVATION, USING EPOXY MORTAR AS NECESSARY TO COMPLETELY FILL ANY VOID BETWEEN THE BOTTOM OF BEARING BLOCK AND EXISTING PIER SEAT AND BETWEEN THE EDGE OF THE PRECAST BEARING BLOCK AND THE ADJACENT CAST-IN-PLACE BLOCKS. EPOXY MORTAR SHALL CONSIST OF EQUAL PARTS OF CLASS B GEL TYPE EPOXY AND DRY SILICA SAND MIXED IN ACCORDANCE WITH THE MANUFACTURER'S DIRECTIONS. THROUGH 2" DIA. HOLES IN BEARING BLOCK, DRILL $1^3/_4$" DIA. HOLES INTO THE PIER SEAT TO A DEPTH OF 5'-$1^1/_2$" BELOW TOP OF BEARING BLOCK. HOLES SHALL BE THOROUGHLY CLEANED USING A WIRE BRUSH AND COMPRESSED AIR OR VACUUMING TO REMOVE ALL LOOSE PARTICLES AND DUST. THEN #10 X 5'-1" DOWELS SHALL BE SET IN HOLES THROUGH BEARING BLOCK USING EPOXY GROUT, IN ACCORDANCE WITH MANUFACTURER'S RECOMMENDATIONS, TO COMPLETELY FILL THE VOIDS.

RECESSES AT LIFT ANCHORS: AFTER BEARING BLOCKS ARE SET, FILL RECESSES WITH CEMENT GROUT TO TOP OF SURROUNDING CONCRETE.

PATCHING AT PRECAST MEMBERS: PATCHING OR REPAIR OF SPALLED OR CHIPPED PRECAST CONCRETE MEMBERS SHALL BE DONE USING CONPATCH V/O MORTAR, MIXED AND INSTALLED IN ACCORDANCE WITH MANUFACTURER'S WRITTEN INSTRUCTIONS.

CONPATCH V/O MORTAR CAN BE ORDERED FROM:
CONSPEC MARKETING & MANUFACTURING CO., INC.
636 SOUTH 66TH TERRACE
KANSAS CITY, KS 66111
PHONE (913) 287 - 1700
FAX (913) 287 - 2716
TOLL FREE (800) 348 - 7351

PLACING PRECAST CAPS ON PIPE PILES: ABRASIVE BLAST CLEAN TOP OF PILES, TO EXPOSE CLEAN AGGREGATE, AND PILE PLATES ON PRECAST CAPS TO REMOVE ALL OIL, GREASE, RUST AND MILL SCALE. MORTAR SHALL CONSIST OF EQUAL PARTS BY VOLUME OF CLASS B EPOXY AND DRY SILICA SAND, MIXED IN ACCORDANCE WITH MANUFACTURER'S DIRECTIONS. MORTAR SHALL BE SPREAD ON TOP OF EACH PILE IN A BENT TO A THICKNESS OF APPROXIMATELY $^1/_8$ INCH IN ORDER TO OBTAIN UNIFORM BEARING. A PRECAST CAP SHALL THEN BE PLACED IN THE PROPER LOCATION ON TOP OF THE PILES. AFTER EPOXY MORTAR HAS HARDENED, CONNECTION BARS SHALL BE WELDED TO PILE PLATES AND PIPE PILING, AS SHOWN ON SHEET 11 OF 37.

AFTER PIER CAP HAS BEEN WELDED TO PILES, BURN OFF LIFTING LOOPS TWO (2) INCHES ABOVE CONCRETE SURFACE. REMAINING PORTION OF LIFTING LOOPS ARE TO BE COATED WITH PAINT. PATCH RECESSES, IF NECESSARY, AROUND LIFTING LOOPS WITH EPOXY MORTAR AS USED FOR SETTING DECK SLAB BEAMS.

STRUCTURAL STEEL: SEE SHEET 25 OF 37 FOR STRUCTURAL STEEL NOTES.

EPOXY: THE FOLLOWING EPOXY MATERIALS ARE APPROVED FOR USE.

CLASS A EPOXY: AS15-18 A&B LIQUID TYPE EPOXY (1)

SPEC-BOND 100 EPOXY (2)

CLASS B EPOXY: AS23-18 A&B GEL TYPE EPOXY (1)

SPEC-BOND 200 EPOXY (2)

(1) AS15-18 AND AS23-18 EPOXIES ARE AVAILABLE FROM:

DELTA PLASTICS CO.
10513 ROAD 236
TERRA BELLA, CA 93270
PHONE (559) 535 - 1332
FAX (559) 535 - 3723

OR

PERMALITE
1537 MONROVIA AVE.
NEWPORT BEACH, CA 92663
PHONE (714) 548 - 1137
FAX (714) 548 - 1130

(2) SPEC-BOND EPOXIES ARE AVAILABLE FROM:

CONSPEC MARKETING & MANUFACTURING CO., INC.
636 SOUTH 66TH TERRACE
KANSAS CITY, KS 66111
PHONE (913) 287 - 1700
FAX (913) 287 - 2716
TOLL FREE (800) 348 - 7351

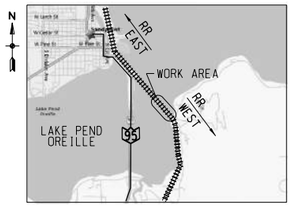

LOCATION PLAN

LEGEND

T/T	= Top of Tie
RY	= Railway
F.S.	= Far Side
N.S.	= Near Side
B.S.	= Both Sides
U.N.O.	= Unless Noted Otherwise
cts.	= Centers
E.F.	= Each Face
F.F.	= Front Face
B.F.	= Back Face
T.	= Top
B.	= Bottom
EXP.	= Expansion Bearing
FIX.	= Fixed Bearing
FO	= Fiber Optic Line

LIFTING WEIGHTS: (APPROXIMATE)
SPC3.9-1 = 85,500 lbs.
SPC3.9-2 = 85,500 lbs.
SPC3.9-3 = 85,500 lbs.
SPBB3.9-2 = 17,500 lbs.
SPBB3.9-3 = 12,000 lbs.
SPBB3.9-4 = 20,000 lbs.
CPB25-10C = 41,600 lbs.
NEW 52'-0" 4-BEAM SET
w/ TRACK PANELS = 100,000 lbs.
EXISTING 52'-0" SPAN w/ TRACK = 72,000 LBS.

ATTENTION !! - UTILITY NOTE

THE IMPLIED PRESENCE OR ABSENCE OF UTILITIES IS NOT TO BE CONSTRUED BY OWNER, ENGINEER, CONTRACTOR, OR SUBCONTRACTORS TO BE AN ACCURATE AND COMPLETE REPRESENTATION OF UTILITIES THAT MAY OR MAY NOT EXIST ON THE CONSTRUCTION SITE. BURIED AND ABOVEGROUND UTILITY LOCATION, IDENTIFICATION, AND MARKING ARE THE SOLE RESPONSIBILITY OF THE CONTRACTOR. REROUTING, DISCONNECTION, PROTECTION, ETC. OF ANY UTILITIES MUST BE COORDINATED AMONG THE CONTRACTOR, UTILITY COMPANY, AND OWNER. SITE SAFETY, INCLUDING THE AVOIDANCE OF HAZARDS, ASSOCIATED WITH BURIED AND ABOVEGROUND UTILITIES REMAINS THE SOLE RESPONSIBILITY OF THE CONTRACTOR.

SUMMARY OF ESTIMATED QUANTITIES *

ITEM	DESCRIPTION	UNIT	QUANTITY
1	MOBILIZATION	L. SUM	1
2	DRIVING 24" DIA. PIPE PILE	L.F.	12,300
3	CLASS 40 CONCRETE**	C.Y.	1,313
4	REINFORCEMENT STEEL	LBS.	165,700
5	INSTALL PIER CAP & CHANNEL BRACING	EACH	16
6	INSTALL 52 FT. STEEL GIRDER SPAN	EACH	15
7	INSTALL 26 FT. PPC GIRDER SPANS, INSTALL BRG. BLOCKS AND MODIFY ABUT./PIER	EACH	2
8	INSTALL REFUGE PLATFORM	EACH	1
9	PIER DEMOLITION	EACH	15
10	SUPERSTRUCTURE DEMOLITION & DISPOSAL	EACH	16

ESTIMATED WEIGHT OF STRUCTURAL STEEL SPANS 72 THRU 86 = 637 TONS

* THESE ITEMS ARE FOR REFERENCE ONLY. SEE PROJECT SPECIFICATIONS FOR ACTUAL PAY ITEMS.

** APPROXIMATE CONCRETE REQUIRED TO FILL PIPE PILES

LIST OF SHEETS

1. RECONSTRUCT WEST 832' OF BRIDGE GENERAL NOTES & LIST OF SHEETS
2. GENERAL PLAN & ELEVATION (SPANS 71 THRU 74)
3. GENERAL PLAN & ELEVATION (SPANS 75 THRU 78)
4. GENERAL PLAN & ELEVATION (SPANS 79 THRU 82)
5. GENERAL PLAN & ELEVATION (SPANS 83 THRU 87)
6. PILE LAYOUT PLAN
7. PILE LAYOUT PLAN
8. PILE LAYOUT PLAN
9. ACCESS/STAGING PLAN
10. TYPICAL SECTION THRU TEMPORARY BRIDGES
11. PILE DETAILS
12. SUPERSTRUCTURE CONSTRUCTION SEQUENCE
13. EXISTING ABUT. NO. 88 MODIFCATION DETAILS
14. TYPICAL SECTIONS
15. TYPICAL SECTIONS ~ PIERS 72-86
16. PIER 71 ~ TYPICAL SECTION & PIER MODIFICATION DETAILS
17. PRECAST PIER CAP ~ SPC3.9-1
18. PRECAST PIER CAP ~ SPC3.9-2
18. PRECAST PIER CAP ~ SPC3.9-3
20. PRECAST CONCRETE BEARING BLOCK ~ SPBB3.9-2
21. PRECAST CONCRETE BEARING BLOCK ~ SPBB3.9-3
22. PRECAST CONCRETE BEARING BLOCK ~ SPBB3.9-4
23. PRESTRESSED CONC. DOUBLE VOIDED BOX BEAM
24. PRESTRESSED CONC. DOUBLE VOIDED BOX BEAM DETAILS
25. STEEL FRAMING PLAN
26. STEEL FRAMING DETAILS
27. BALLAST PAN PLAN
28. BEARING DETAILS
29. MISCELLANEOUS STEEL DETAILS
30. HANDRAIL PANEL DETAILS (1 OF 2)
31. HANDRAIL PANEL DETAILS (2 OF 2)
32. REFUGE PLATFORM DETAILS
33. REFUGE PLATFORM STEEL DETAILS & SUPPORTS
34. REFUGE PLATFORM STEEL CONNECTIONS
35. WALKWAY TRANSITION AT ABUT. NO. 88
36. BILL OF MATERIAL
37. BILL OF MATERIAL & BALLAST STOP PLATE DETAILS

REFERENCES:

BNSF Standards:
PLAN NO. 0000-17902-70A
PLAN NO. 500000-BG1 & BG2

Existing Drawings:
General Plan - Index No. 91370
Detail of Abutments and Piers No. 72 to 83 incl.
Detail of Piers No. 2 to 12 incl. and No. 84 to 86 incl.
Detail of Pier Nos. 63, 64, 70 and 71
Shop Plan of Existing Bearings for 50' T.P.G. Spans
4-75 ft. Through Plate Girder Span
Elevation & Location Plan
Details of 50'-0" Deck Plate Girder
Soil Borings and Test Piles

Survey Drawings:
Sheets 1 thru 16 dated 10-21-08

ISSUED FOR CONSTRUCTION
4-22-09

HANSON
Hanson Professional Services Inc.

SURVEY DATA
Bridge Survey completed by Parsons Dec. 2008. Elevations based on NGVD 1929 datum.

DESIGN DATA
2008 A.R.E.M.A. Design Specifications
Loading: Cooper E 80 w/ Diesel Impact and A.R.E.M.A. Chapter 15 Alternative Live Load

DES: AAN	BNSF RAILWAY
DRAWN: CDP	BRIDGE ENGINEERING KANSAS CITY, KS
CHECK: MAF	APPROVED: Ron G Berry
DATE: 04/22/09	ASST. DIRECTOR STRUCTURES DESIGN
AUTH: A090024	
LINE SEG: 0045	

SANDPOINT JCT. TO LAKESIDE JCT.
BRIDGE NUMBER 3.9
OVER LAKE PEND OREILLE
NEAR SANDPOINT, ID
RECONSTRUCT WEST 832' OF BRIDGE
GENERAL NOTES & LIST OF SHEETS

PLAN NO: 0045-3.9-76 | SHEET: 1 OF 37

Preliminary Agency Review

USCG0010743/27

To SPOKANE, WA
(RY West)

To WHITEFISH, MT
(RY East)

NOTE: Details of existing pier footing protection are schematic in nature and are shown for information only. Details are based on underwater inspection performed Sept. 2007

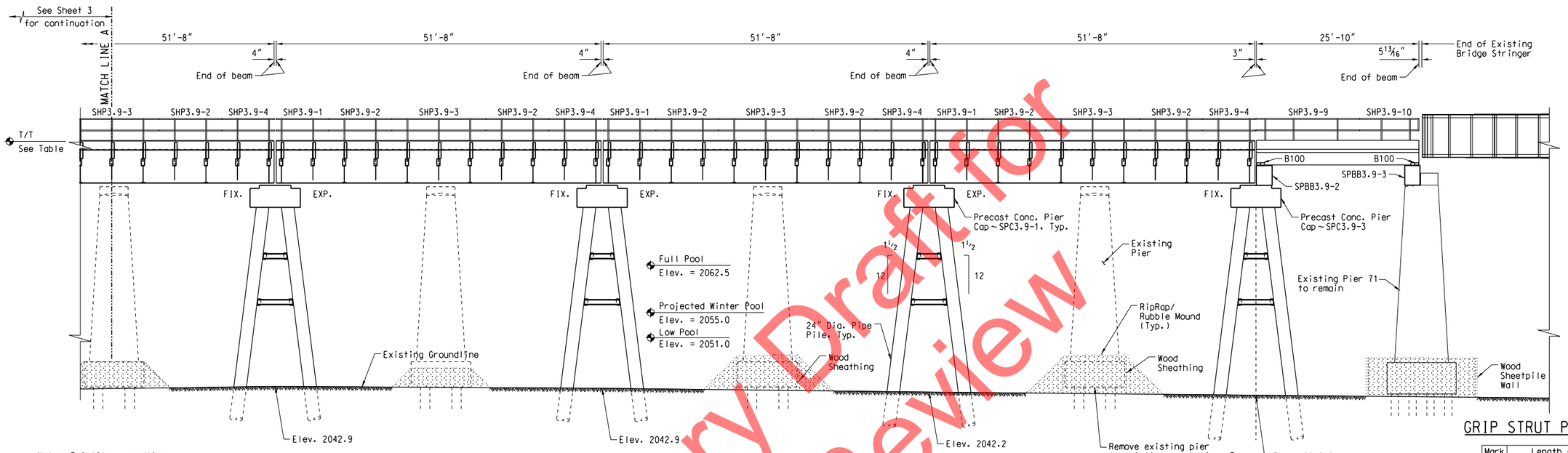

Note: Existing groundline elevations are approximate

ELEVATION
(Looking RY North)
Bearings not shown.
Existing Bridge Superstructure not shown.

GRIP STRUT PANELS

Mark	Length *
4	13'-0" Length

* NOTE: Actual lengths shown, supply in lengths of 14'-0".

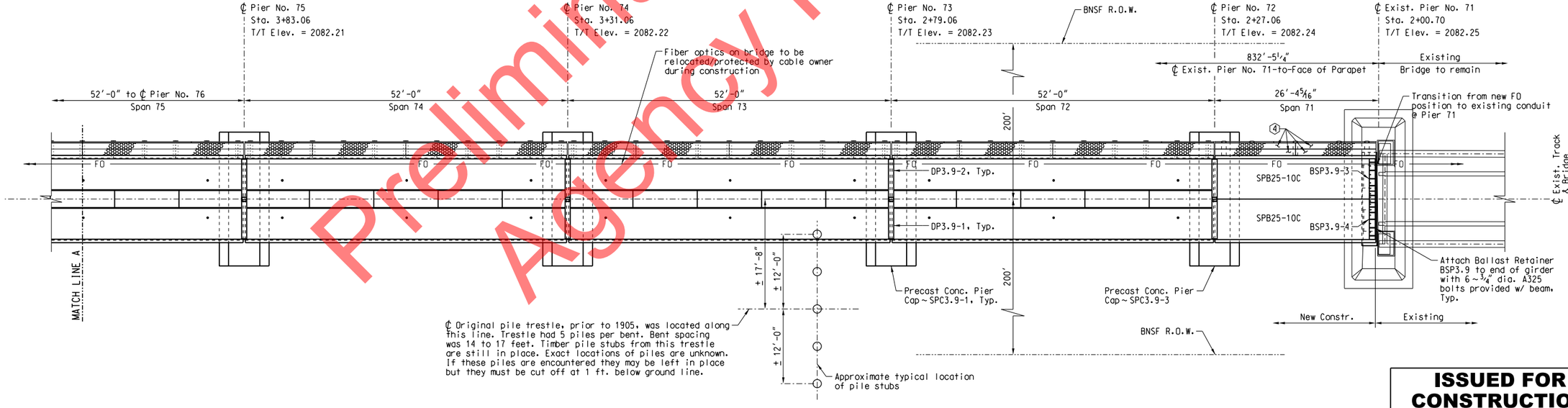

PLAN

ELEVATIONS FOR NEW BRIDGE					
	Pier No. 75	Pier No. 74	Pier No. 73	Pier No. 72	Pier No. 71
T/T	2082.21	2082.22	2082.23	2082.24	2082.25
Top of Bridge Seat	2075.10	2075.10	2075.10	2075.10/2078.28	* 2078.28

* Contractor to field verify elevation of existing pier 71 prior to existing span removal.

ISSUED FOR CONSTRUCTION
4-22-09

Preliminary Draft for Agency Review

HANSON
Hanson Professional Services Inc.

DES: AAN	
DRAWN: CDP	
CHECK: MAF	
DATE: 04/22/09	
AUTH: A090024	
LINE SEG: 0045	

BNSF RAILWAY
BRIDGE ENGINEERING KANSAS CITY, KS
APPROVED: Ron G Berry
ASST. DIRECTOR STRUCTURES DESIGN

SANDPOINT JCT. TO LAKESIDE JCT.
BRIDGE NUMBER 3.9
OVER LAKE PEND OREILLE
NEAR SANDPOINT, ID
GENERAL PLAN & ELEVATION
(SPANS 71 THRU 74)

PLAN NO: 0045-3.9-77 | SHEET: 2 OF 37

USCG0010753/27

To SPOKANE, WA
(RY West)

NOTE: Details of existing pier footing protection are schematic in nature and are shown for information only. Details are based on underwater inspection performed Sept. 2007

To WHITEFISH, MT
(RY East)

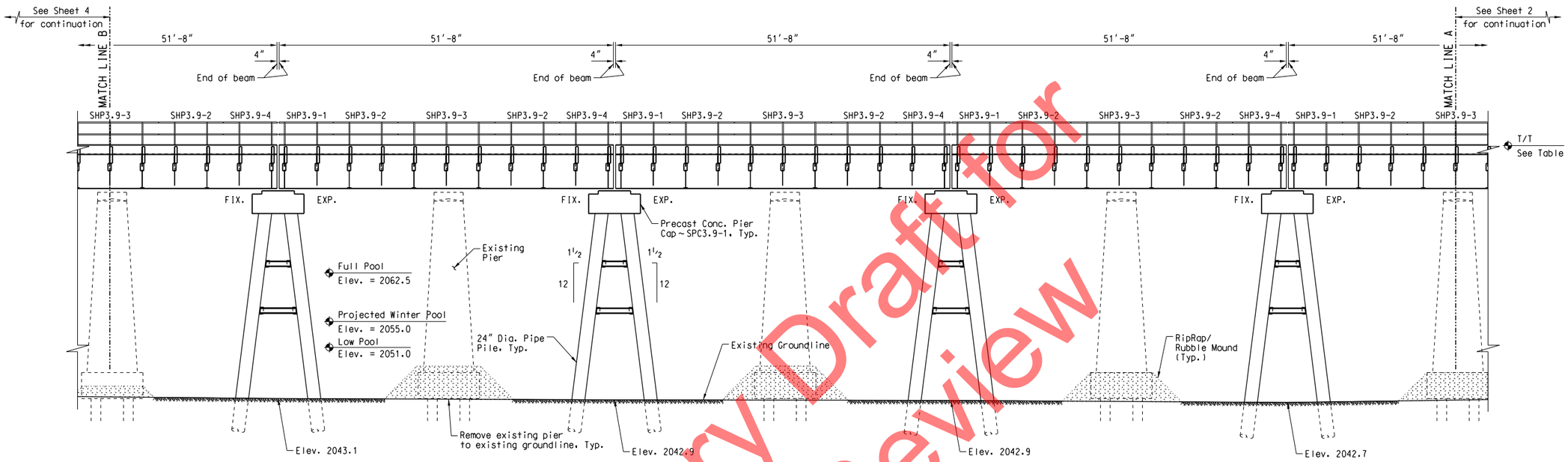

ELEVATION
(Looking RY North)
Bearings not shown.
Existing Bridge Superstructure not shown.

Note: Existing groundline elevations are approximate

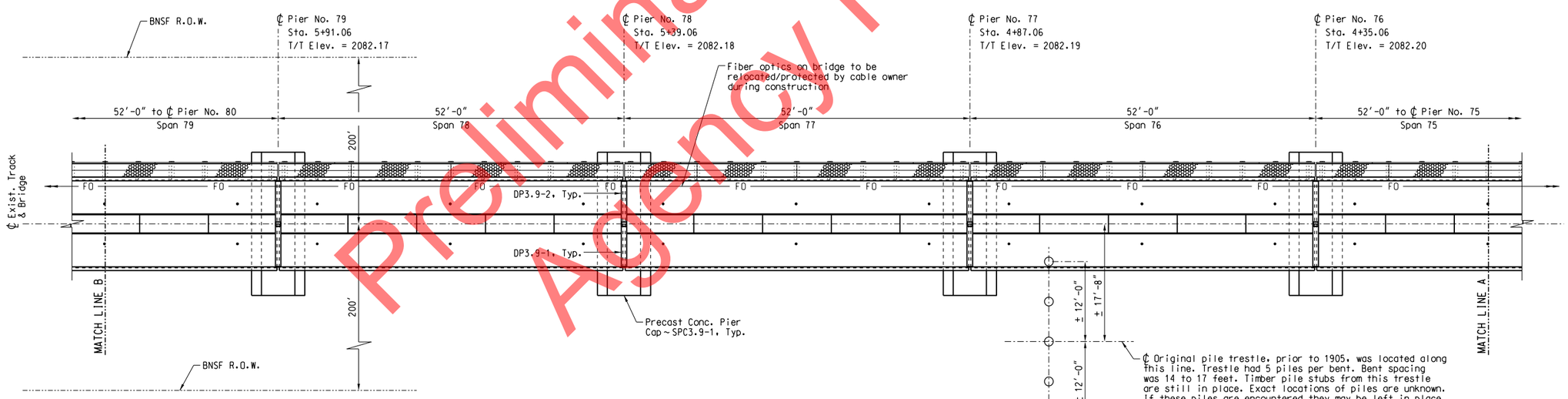

PLAN

ELEVATIONS FOR NEW BRIDGE				
	Pier No. 79	Pier No. 78	Pier No. 77	Pier No. 76
T/T	2082.17	2082.18	2082.19	2082.20
Top of Bridge Seat	2075.10	2075.10	2075.10	2075.10

ISSUED FOR CONSTRUCTION
4-22-09

Preliminary Draft for Agency Review

HANSON
Hanson Professional Services Inc.

DES: AAN	
DRAWN: CDP	
CHECK: MAF	
DATE: 04/22/09	
AUTH: A090024	
LINE SEG: 0045	

BNSF RAILWAY
BRIDGE ENGINEERING KANSAS CITY, KS
APPROVED: Ron G Berry
ASST. DIRECTOR STRUCTURES DESIGN

SANDPOINT JCT. TO LAKESIDE JCT.
BRIDGE NUMBER 3.9
OVER LAKE PEND OREILLE
NEAR SANDPOINT, ID
GENERAL PLAN & ELEVATION
(SPANS 75 THRU 78)

PLAN NO: 0045-3.9-78 | SHEET: 3 OF 37

USCG0010763/27

To SPOKANE, WA
(RY West)

NOTE: Details of existing pier footing protection are schematic in nature and are shown for information only. Details are based on underwater inspection performed Sept. 2007

To WHITEFISH, MT
(RY East)

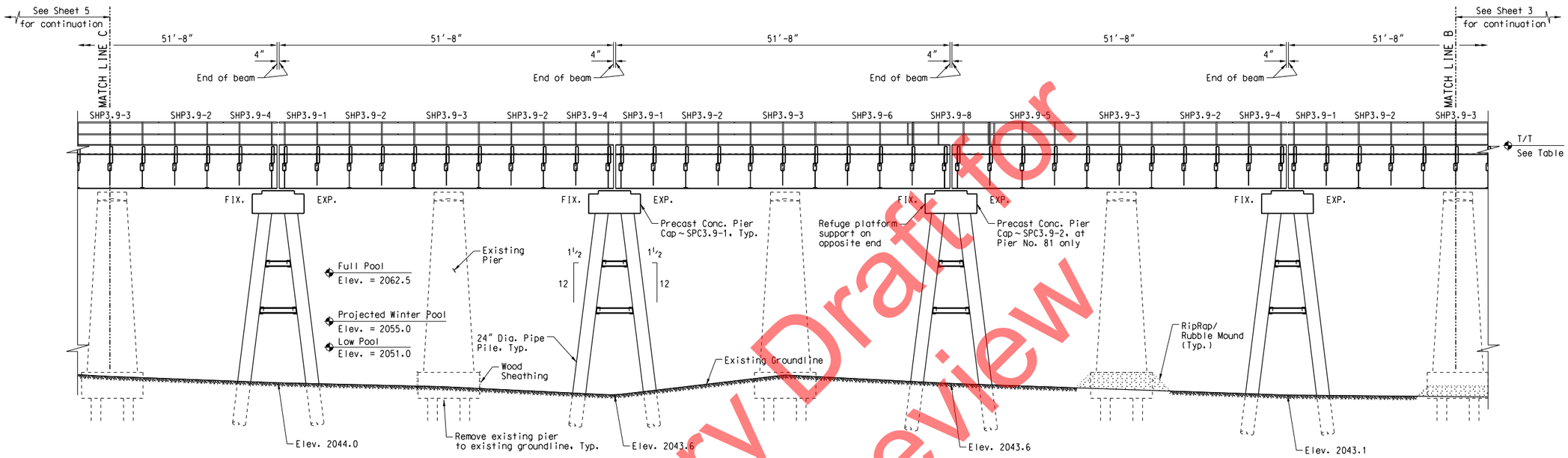

ELEVATION
(Looking RY North)
Bearings not shown.
Existing Bridge Superstructure not shown.

Note: Existing groundline elevations are approximate

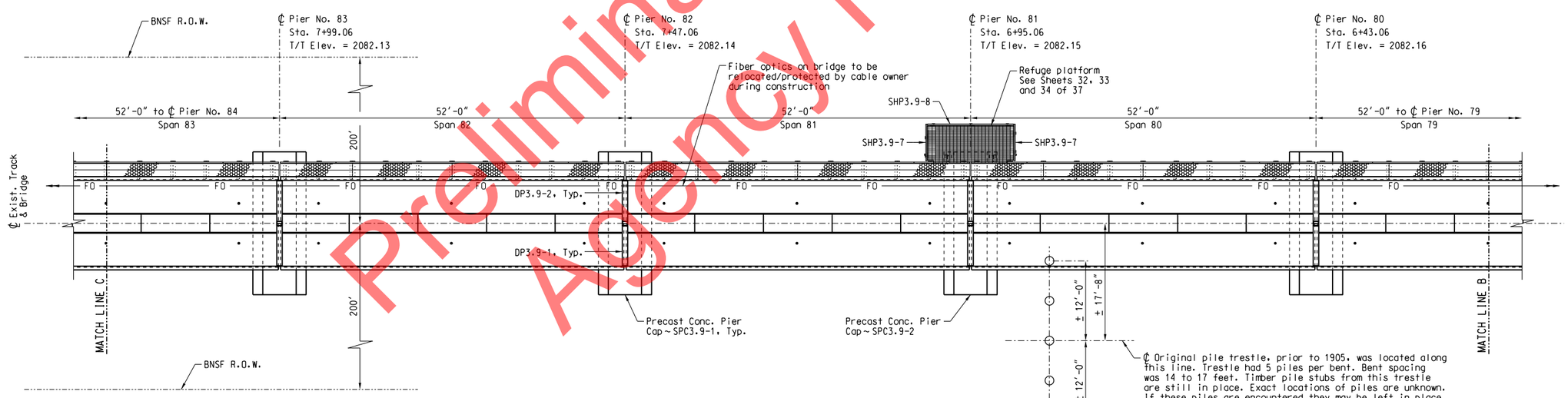

PLAN

ELEVATIONS FOR NEW BRIDGE				
	Pier No. 83	Pier No. 82	Pier No. 81	Pier No. 80
T/T	2082.13	2082.14	2082.15	2082.16
Top of Bridge Seat	2075.10	2075.10	2075.10	2075.10

ISSUED FOR CONSTRUCTION
4-22-09

Preliminary Draft for Agency Review

HANSON
Hanson Professional Services Inc.

DES: AAN	
DRAWN: CDP	
CHECK: MAF	
DATE: 04/22/09	
AUTH: A090024	
LINE SEG: 0045	

BNSF RAILWAY
BRIDGE ENGINEERING KANSAS CITY, KS
APPROVED: Ron G Berry
ASST. DIRECTOR STRUCTURES DESIGN

SANDPOINT JCT. TO LAKESIDE JCT.
BRIDGE NUMBER 3.9
OVER LAKE PEND OREILLE
NEAR SANDPOINT, ID
GENERAL PLAN & ELEVATION
(SPANS 79 THRU 82)

PLAN NO: 0045-3.9-79 | SHEET: 4 OF 37

To SPOKANE, WA
(RY West)

NOTE: Details of existing pier footing protection are schematic in nature and are shown for information only. Details are based on underwater inspection performed Sept. 2007

To WHITEFISH, MT
(RY East)

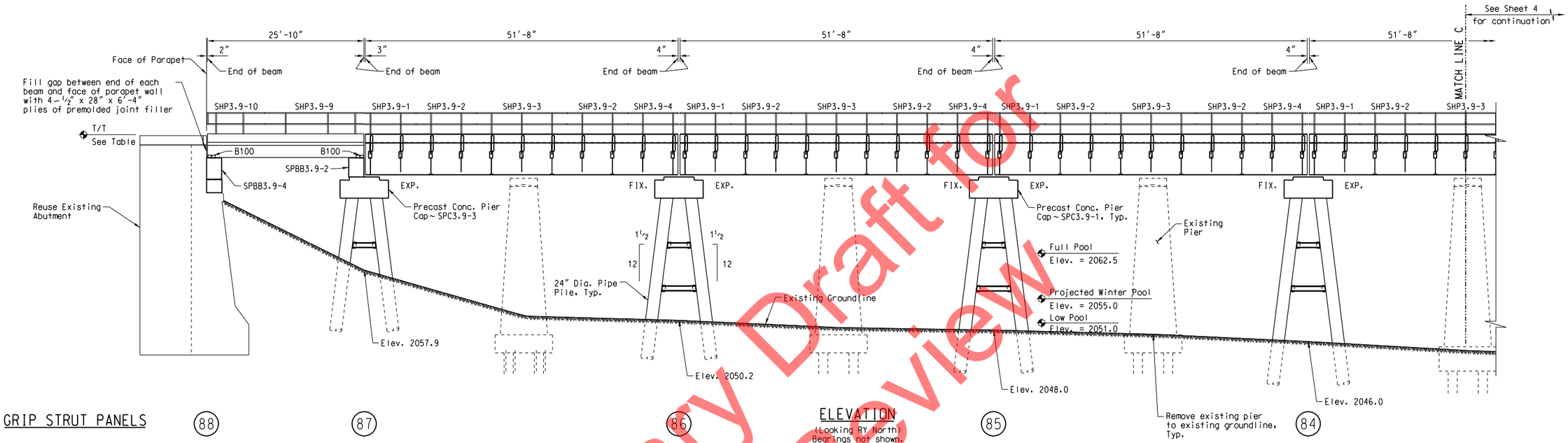

GRIP STRUT PANELS

Mark	Length
4	13'-0" Length

Note: Existing groundline elevations are approximate

ELEVATION
(Looking RY North)
Bearings not shown.
Existing Bridge Superstructure not shown.

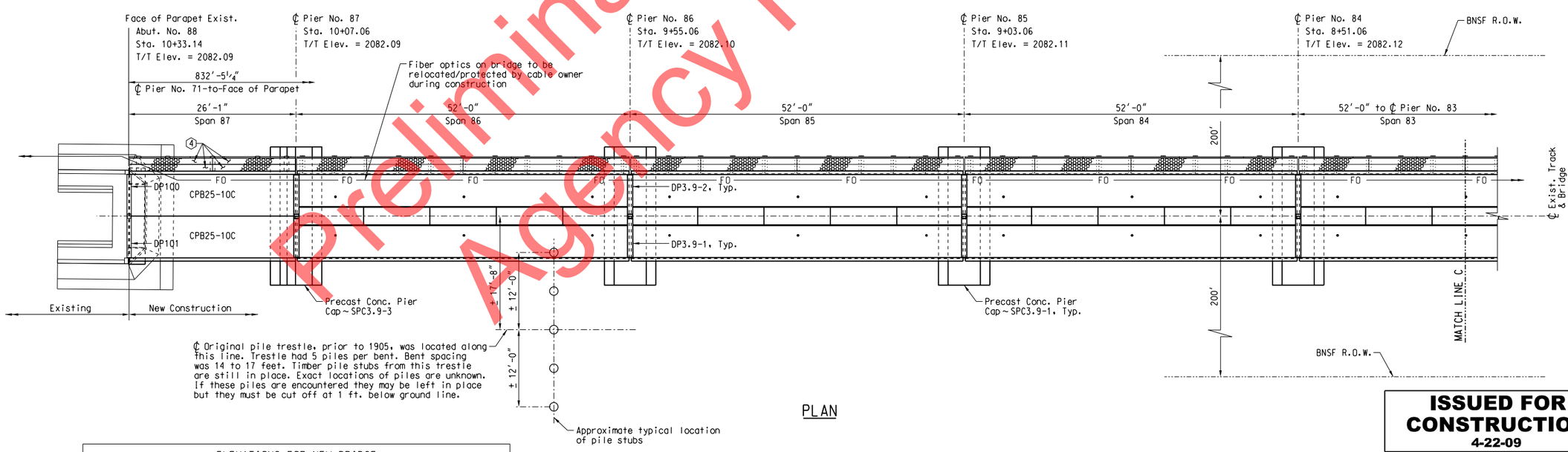

PLAN

ELEVATIONS FOR NEW BRIDGE					
	Abut. No. 88	Pier No. 87	Pier No. 86	Pier No. 85	Pier No. 84
T/T	2082.09	2082.09	2082.10	2082.11	2082.12
Top of Bridge Seat	* 2078.28	2078.28/2075.10	2075.10	2075.10	2075.10

* Contractor to field verify elevation of existing abutment seat prior to existing span removal.

ISSUED FOR CONSTRUCTION
4-22-09

HANSON
Hanson Professional Services Inc.

DES: AAN	
DRAWN: CDP	
CHECK: MAF	
DATE: 04/22/09	
AUTH: A090024	
LINE SEG: 0045	

BNSF RAILWAY
BRIDGE ENGINEERING KANSAS CITY, KS
APPROVED: Ron G Berry
ASST. DIRECTOR STRUCTURES DESIGN

SANDPOINT JCT. TO LAKESIDE JCT.
BRIDGE NUMBER 3.9
OVER LAKE PEND OREILLE
NEAR SANDPOINT, ID
GENERAL PLAN & ELEVATION
(SPANS 83 THRU 87)

PLAN NO: 0045-3.9-80 | SHEET: 5 OF 37

Preliminary Draft for Agency Review

To SPOKANE, WA (RY West)

To WHITEFISH, MT (RY East)

NOTE:

Temporary piles are shown only as representative indication of quantity of temporary piles permitted. Final location, configuration and size of temporary piles shall be determined by the contractor subject to BNSF approval and project permitting conditions. All temporary piles shall be completely removed at the completion of the work.

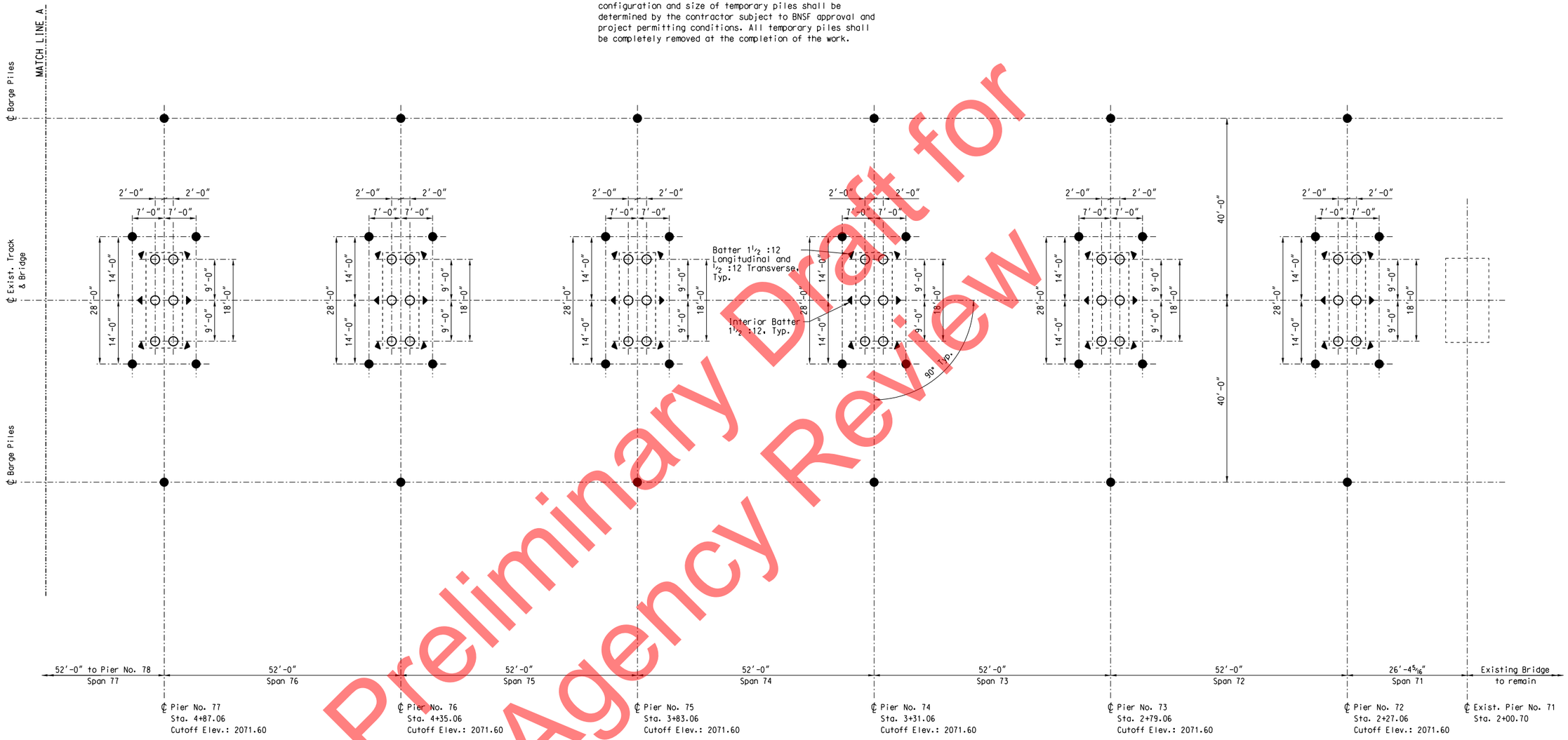

Preliminary Draft for Agency Review

PILE LAYOUT PLAN

ATTENTION !! - UTILITY NOTE

THE LOCATIONS OF THOSE BURIED AND ABOVEGROUND UTILITIES SHOWN ARE APPROXIMATE, ARE SHOWN FOR CONTRACTOR INFORMATIONAL USE ONLY, AND ARE NOT TO BE REFERENCED FOR CONSTRUCTION PURPOSES. THE IMPLIED PRESENCE OR ABSENCE OF UTILITIES IS NOT TO BE CONSTRUED BY OWNER, ENGINEER, CONTRACTOR, OR SUBCONTRACTORS TO BE AN ACCURATE AND COMPLETE REPRESENTATION OF UTILITIES THAT MAY OR MAY NOT EXIST ON THE CONSTRUCTION SITE, BURIED AND ABOVEGROUND UTILITY LOCATION, IDENTIFICATION, AND MARKING ARE THE SOLE RESPONSIBILITY OF THE CONTRACTOR, REROUTING, DISCONNECTION, PROTECTION, ETC. OF ANY UTILITIES MUST BE COORDINATED AMONG THE CONTRACTOR, UTILITY COMPANY, AND OWNER, SITE SAFETY, INCLUDING THE AVOIDANCE OF HAZARDS, ASSOCIATED WITH BURIED AND ABOVEGROUND UTILITIES REMAINS THE SOLE RESPONSIBILITY OF THE CONTRACTOR.

Notes:

1. ○ - Production pipe piles 24" dia. x ½" thk.
2. ● - Temporary template pipe piles 24" dia. x ⅜" thk.
3. ◒ - Temporary trestle pipe piles 24" dia. x ½" thk.
4. ▼ - Indicates direction of batter of production piles. The two interior piles shall be battered at 1½ :12. The four exterior piles shall be battered at 1½ :12 Longitudinal and ½ :12 Transverse.
5. All dimensions are given at cutoff elevation of production piles.
6. Production Piles to be driven as noted in the Project Technical Specification Section 4210 and as determined by the Engineer.
7. See General Plan & Elevation sheets for approximate location of original pile trestle.
8. Use of a template to ensure pile locations during driving is required.
9. Steel conical pile points with dull tip shall be welded onto each pile.

ELEVATIONS FOR NEW BRIDGE

	Pier No. 77	Pier No. 76	Pier No. 75	Pier No. 74	Pier No. 73	Pier No. 72
Top of Pile (cutoff)	2071.60	2071.60	2071.60	2071.60	2071.60	2071.60
Estimated tip elev.	1940.9	1958.7	1958.9	1958.9	1958.2	1956.2

Note: Estimated tip elevations are based on Geotech Report.

ISSUED FOR CONSTRUCTION
4-22-09

Work with sheets 7 and 8 of 37

DES: AAN	
DRAWN: CDP	
CHECK: MAF	
DATE: 04/22/09	
AUTH: A090024	
LINE SEG: 0045	

BNSF RAILWAY
BRIDGE ENGINEERING KANSAS CITY, KS
APPROVED: Ron G Berry
ASST. DIRECTOR STRUCTURES DESIGN

SANDPOINT JCT. TO LAKESIDE JCT.
BRIDGE NUMBER 3.9
OVER LAKE PEND OREILLE
NEAR SANDPOINT, ID
PILE LAYOUT PLAN

PLAN NO: 0045-3.9-81 | SHEET: 6 OF 37

HANSON
Hanson Professional Services Inc.

USCG0010793/27

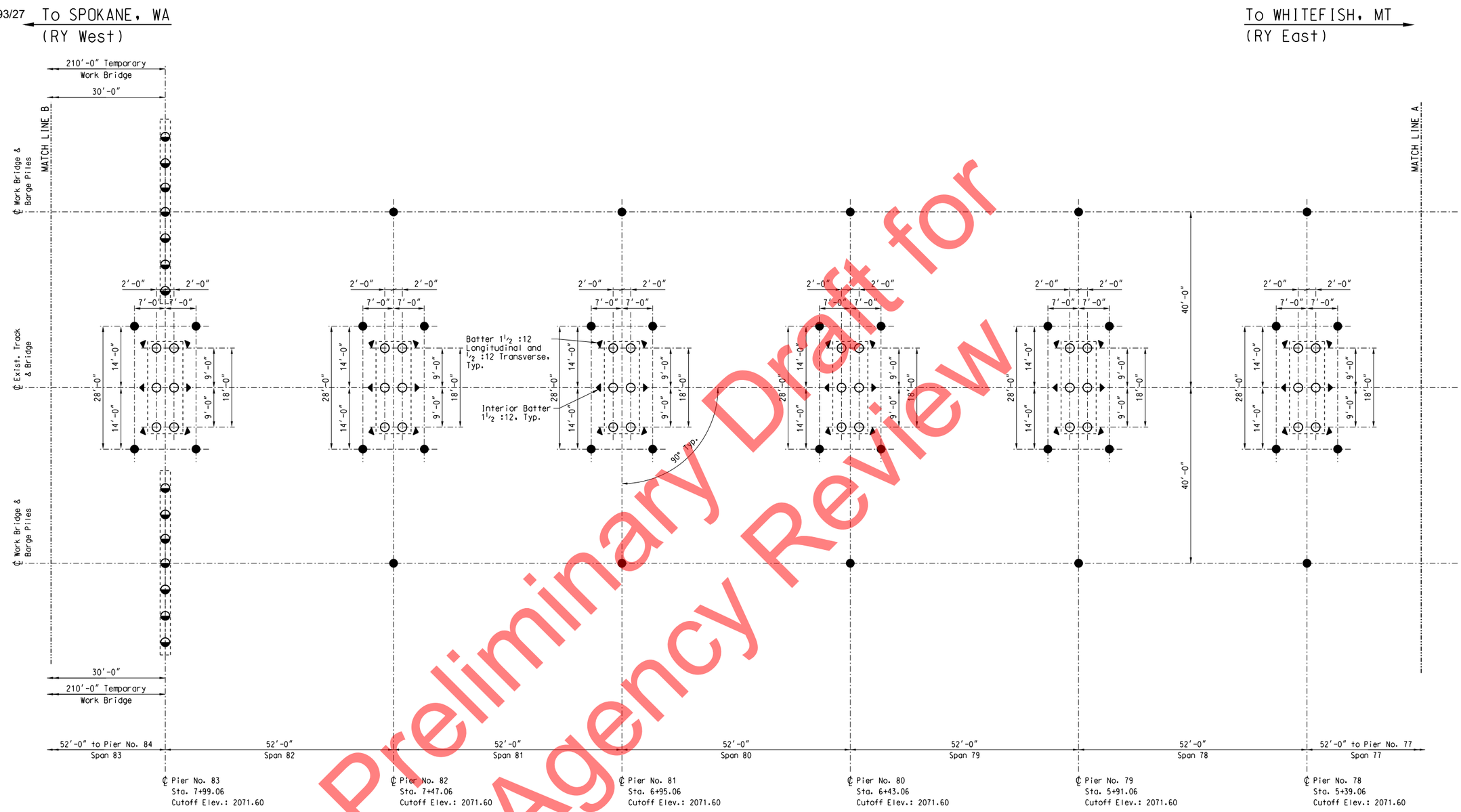

Preliminary Draft for Agency Review

PILE LAYOUT PLAN

ELEVATIONS FOR NEW BRIDGE						
	Pier No. 83	Pier No. 82	Pier No. 81	Pier No. 80	Pier No. 79	Pier No. 78
Top of Pile (cutoff)	2071.60	2071.60	2071.60	2071.60	2071.60	2071.60
Estimated tip elev.	1934.0	1933.6	1941.6	1941.1	1941.1	1940.9

Note: Estimated tip elevations are based on Geotech Report.

ISSUED FOR CONSTRUCTION
4-22-09

Work with sheets 6 and 8 of 37

DES: AAN	BNSF RAILWAY	SANDPOINT JCT. TO LAKESIDE JCT.
DRAWN: CDP	BRIDGE ENGINEERING KANSAS CITY, KS	BRIDGE NUMBER 3.9
CHECK: MAF		OVER LAKE PEND OREILLE NEAR SANDPOINT, ID
DATE: 04/22/09	APPROVED: Ron G Berry	PILE LAYOUT PLAN
AUTH: A090024	ASST. DIRECTOR STRUCTURES DESIGN	PLAN NO: 0045-3.9-82
LINE SEG: 0045		SHEET: 7 OF 37

HANSON
Hanson Professional Services Inc.

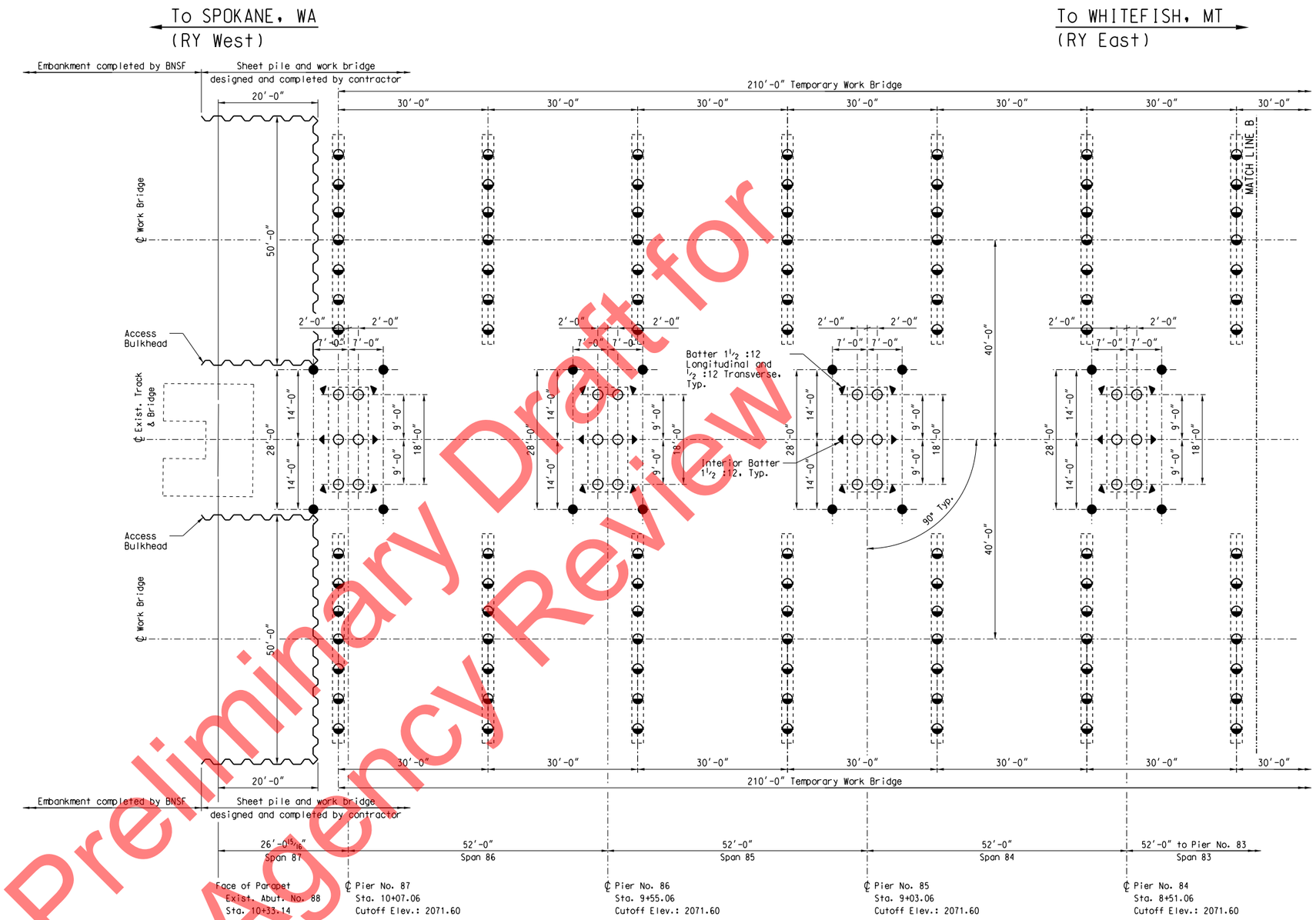

See sheet 9 of 37 for access/staging area.

Preliminary Draft for Agency Review

PILE LAYOUT PLAN

ELEVATIONS FOR NEW BRIDGE				
	Pier No. 87	Pier No. 86	Pier No. 85	Pier No. 84
Top of Pile (cutoff)	2071.60	2071.60	2071.60	2071.60
Estimated tip elev.	1940.1	1940.2	1938.0	1936.0

Note: Estimated tip elevations are based on Geotech Report.

ISSUED FOR CONSTRUCTION
4-22-09

Work with sheets 6 and 7 of 37

DES: AAN	
DRAWN: CDP	
CHECK: MAF	
DATE: 04/22/09	
AUTH: A090024	
LINE SEG: 0045	

BNSF RAILWAY
BRIDGE ENGINEERING KANSAS CITY, KS
APPROVED: Ron G Berry
ASST. DIRECTOR STRUCTURES DESIGN

SANDPOINT JCT. TO LAKESIDE JCT.
BRIDGE NUMBER 3.9
OVER LAKE PEND OREILLE
NEAR SANDPOINT, ID
PILE LAYOUT PLAN

PLAN NO: 0045-3.9-83 | SHEET: 8 OF 37

HANSON
Hanson Professional Services Inc.

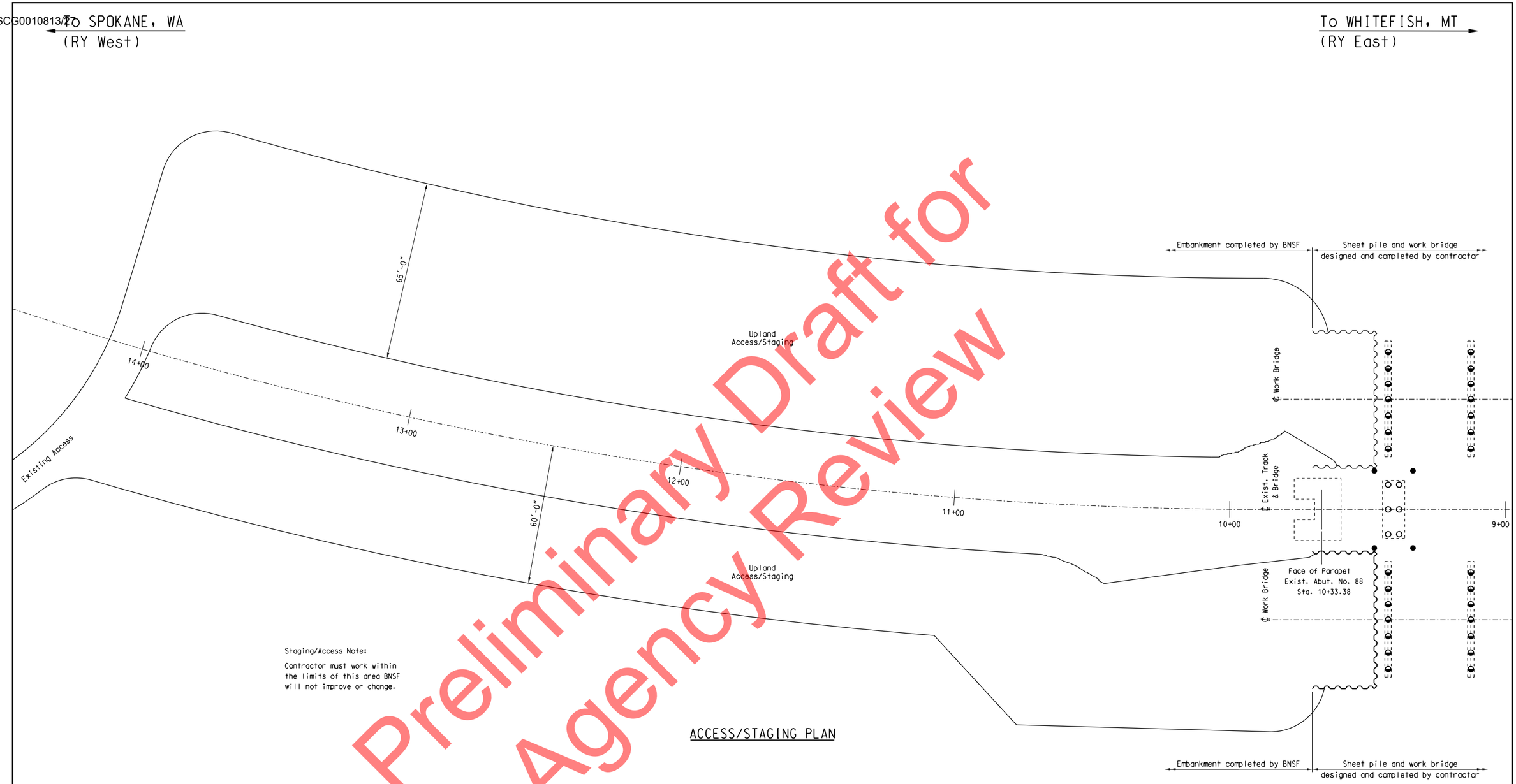

Staging/Access Note:

Contractor must work within the limits of this area BNSF will not improve or change.

ACCESS/STAGING PLAN

Preliminary Draft for Agency Review

ISSUED FOR CONSTRUCTION
4-22-09

DES: AAN	
DRAWN: CDP	
CHECK: MAF	
DATE: 04/22/09	
AUTH: A090024	
LINE SEG: 0045	

BNSF RAILWAY
BRIDGE ENGINEERING KANSAS CITY, KS
APPROVED: Ron G Berry
ASST. DIRECTOR STRUCTURES DESIGN

SANDPOINT JCT. TO LAKESIDE JCT.
BRIDGE NUMBER 3.9
OVER LAKE PEND OREILLE
NEAR SANDPOINT, ID
ACCESS/STAGING PLAN

PLAN NO: 0045-3.9-84 | SHEET: 9 OF 37

HANSON
Hanson Professional Services Inc.

USCG0010823/27

To SPOKANE, WA
(RY West)

To WHITEFISH, MT
(RY East)

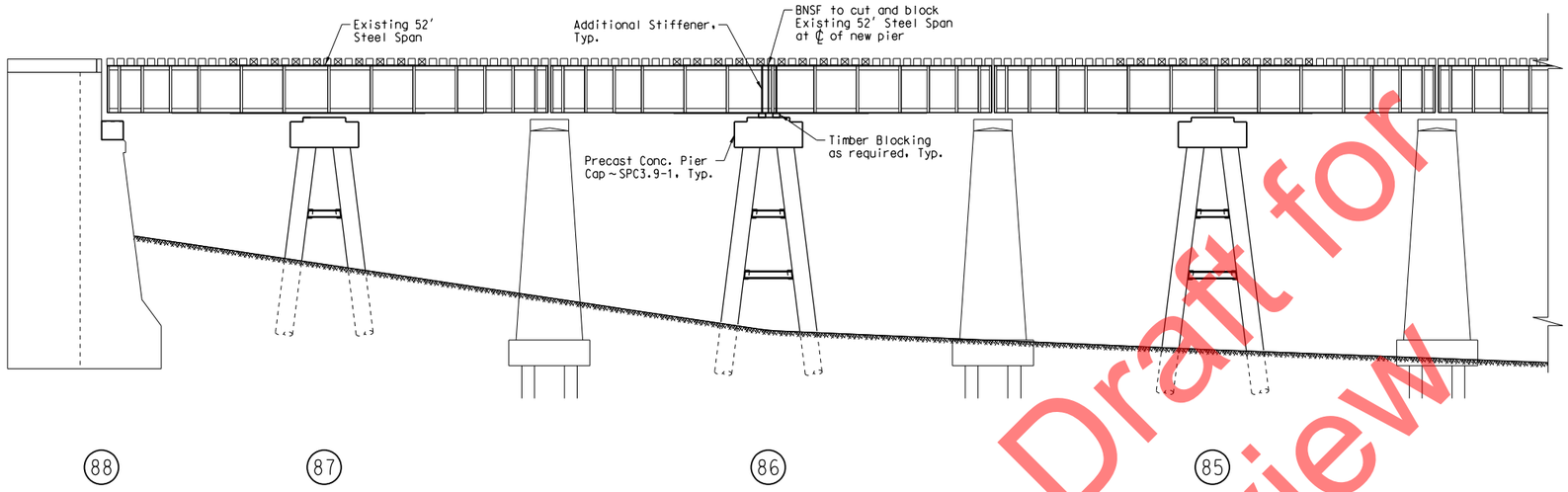

ELEVATION I
(Looking RY North)
Bearings not shown.

SUPERSTRUCTURE CONSTRUCTION SEQUENCE:

1. INSTALL PIPE PILES, PIER CAPS, AND PIER BRACING. FIELD VERIFY ELEVATION OF THE TOP OF EXISITNG PIER TO CONFIRM CLEARANCE FOR INSTALLATION OF 52 FT. STEEL SPAN.
2. BNSF TO INSTALL STIFFENERS AND DIAPHRAGMS AS REQUIRED.
3. BNSF TO SUPPORT EXISTING 52 FT. STEEL SPANS ON TIMBER BLOCKING AS REQUIRED AT NEW PIER SUPPORT LOCATIONS.
4. BNSF TO CUT EXISTING 52 FT. STEEL SPANS AT NEW PIER SUPPORT LOCATIONS.
5. SUBMIT SUPERSTRUCTURE CONSTRUCTION PLAN TO BNSF FOR APPROVAL. APPROVAL OF SUPERSTRUCTURE CONSTRUCTION PLAN IS REQUIRED PRIOR TO BEGINNING WORK.
6. COORDINATE REQUIRED SUPERSTRUCTURE REPLACEMENT WORK WINDOWS WITH BNSF.
7. BRIDGE CLOSED TO TRAIN TRAFFIC AT START OF WORK WINDOW.
8. BNSF TO CUT RAIL AS REQUIRED.
9. REMOVE AND DISPOSE OF EXISTING STEEL SPAN(S) TO BE REPLACED DURING WORK WINDOW. PART OF MODIFIED EXISTING 52 FT. STEEL SPAN TO REMAIN AND BE REUSED AS REQUIRED.
10. ERECT NEW 52 FT. STEEL SPAN.
11. BNSF TO SPLICE RAIL AND COMPLETE TRACK WORK AS REQUIRED IN WORK AREA.
12. BRIDGE REOPENED TO TRAIN TRAFFIC AT COMPLETION OF WORK AND END OF WORK WINDOW.
13. STEPS 7 THRU 12 REPEATED DURING COORDINATED WORK WINDOWS UNTIL SPANS 71 THRU 87 HAVE BEEN REMOVED AND REPLACED.
14. BNSF TO INSTALL BALLAST AND SURFACE TRACK SPANS 71 THRU 87

Note:
New spans shall be set with the grating and walkway installed.

To SPOKANE, WA
(RY West)

To WHITEFISH, MT
(RY East)

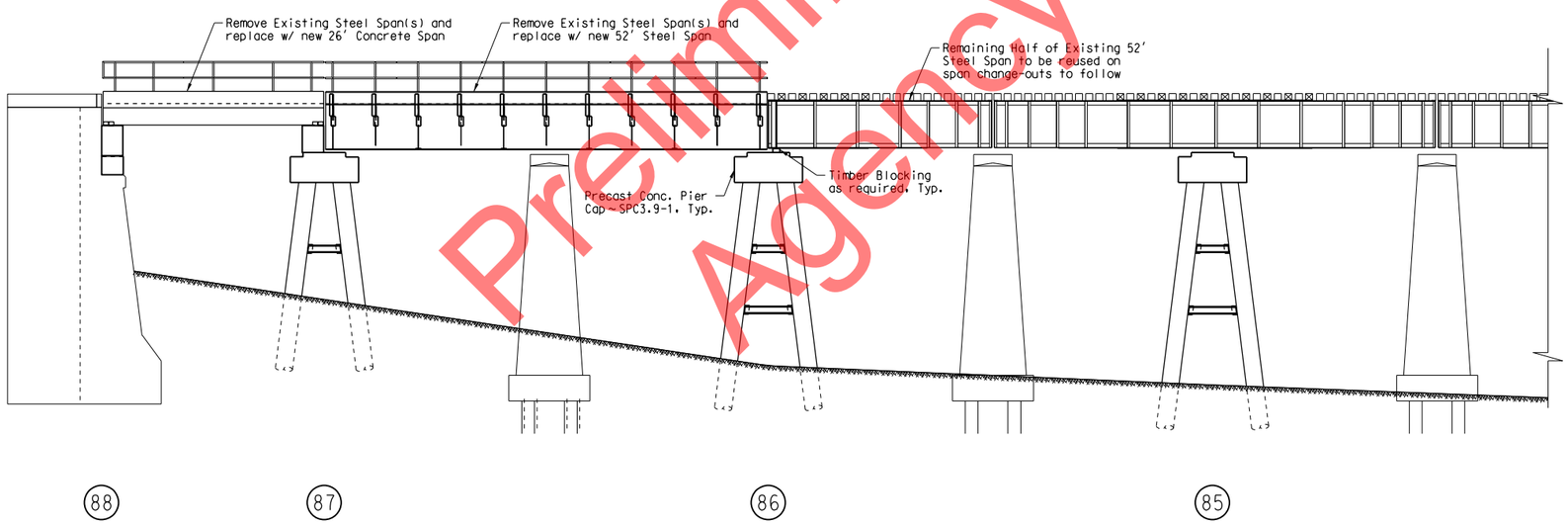

ELEVATION II
(Looking RY North)
Bearings not shown.

Note: Contractor to perform construction activities unless stated otherwise.

ISSUED FOR CONSTRUCTION
4-22-09

Preliminary Draft for Agency Review

HANSON
Hanson Professional Services Inc.

DES: AAN	
DRAWN: CDP	
CHECK: MAF	
DATE: 04/22/09	
AUTH: A090024	
LINE SEG: 0045	

BNSF RAILWAY
BRIDGE ENGINEERING KANSAS CITY, KS
APPROVED: Ron G Berry
ASST. DIRECTOR STRUCTURES DESIGN

SANDPOINT JCT. TO LAKESIDE JCT.
BRIDGE NUMBER 3.9
OVER LAKE PEND OREILLE
NEAR SANDPOINT, ID
SUPERSTRUCTURE CONSTRUCTION SEQUENCE

PLAN NO: 0045-3.9-87 | SHEET: 12 OF 37

USCG0010833/27

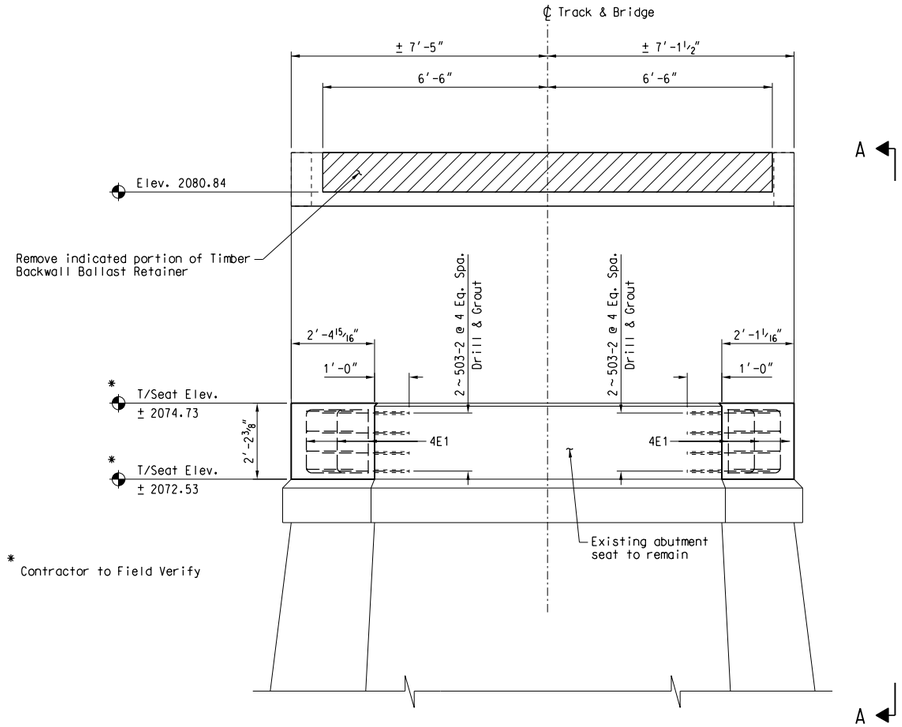

ELEVATION ~ EXISTING ABUTMENT NO. 88

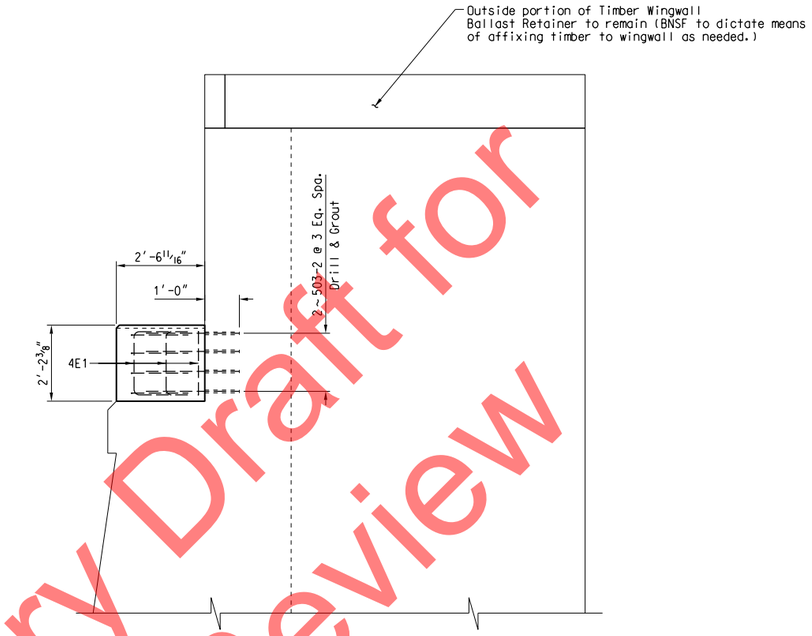

VIEW A-A

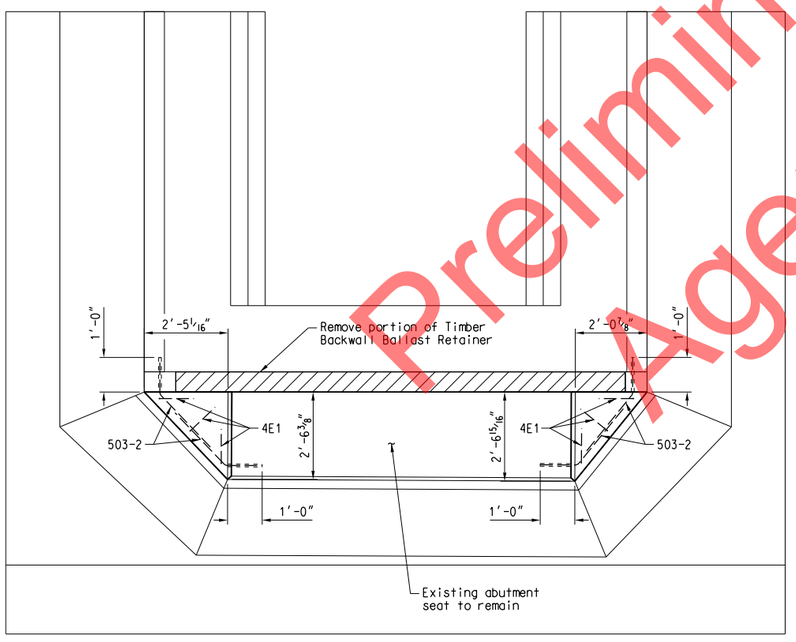

PLAN ~ EXISTING ABUTMENT NO. 88

LIST OF REINFORCING BARS REQUIRED				
NO.	MARK	SIZE	TYPE	LENGTH
16	503-2	#5	STR.	3'-2"
6	4E1	#4	E	3'-10½"

Note: Field bend 503-2 bars to fit.

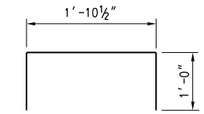

BAR 4E1

REINFORCING STEEL DETAILS

All dimensions shown are out-to-out of bars

ESTIMATED QUANTITIES		
DESCRIPTION	UNIT	QUANTITY
C.I.P. CONCRETE, CLASS 40	CU.YDS.	0.5
REINFORCEMENT	LBS.	68

NOTES:

CAST-IN-PLACE CONCRETE: All concrete, concrete work and placement of reinforcement shall be in accordance with Section 04400 of the B.N.S.F. Standard Construction Specifications.

The portland cement used in all concrete shall be Type II or Type IIA.

All concrete shall be air-entrained containing not less than 5 percent nor more than 7 percent air by volume.

Concrete shall be Class 40 with an ultimate compressive strength of not less than 4000 psi in 28 days. Maximum size of coarse aggregate shall be one inch. The minimum concrete cover on reinforcement shall be two inches unless indicated otherwise. Exposed concrete edges shall be beveled ¾".

Existing concrete surfaces, against which new concrete is to be placed, shall be abrasive blast cleaned to expose clean aggregate. Dirt and other foreign material must be thoroughly cleaned off, and surfaces dampened before additional concrete is placed.

Reinforcing bars to be drilled into existing concrete shall be epoxy grouted with an approved epoxy. The following epoxy materials are approved for use:

1. AS23-18 A&B manufactured by Delta Plastics Co., phone (559)535-1332.
2. Spec-Bond 200 manufactured by Conspec Marketing & Manufacturing Co., Inc., phone (877)266-7732.
3. Epoxy-Tie epoxy, manufactured by Simpson Strong-Tie Co. Inc., phone (800)999-5099

An equivalent epoxy grout adhesive system could be used with written approval from the Engineer. Grouting shall be in accordance with manufacturer's recommendations. Drilled hole size diameter shall be ⅛ inch larger than reinforcement bar diameter.

REMOVAL NOTES: Hatched portions of Existing Abutment No. 88 shall be removed. All other components of Existing Abutment to remain.

Removal procedures shall not damage portion of Existing Abutment to remain.

Abutment seats shall be made level at the indicated elevation prior to the placing, precast concrete bearing block SPBB3.9-4.

ISSUED FOR CONSTRUCTION
4-22-09

Preliminary Draft for Agency Review

HANSON
Hanson Professional Services Inc.

DES: AAN	BNSF RAILWAY	SANDPOINT JCT. TO LAKESIDE JCT.
DRAWN: CDP	BRIDGE ENGINEERING KANSAS CITY, KS	BRIDGE NUMBER 3.9
CHECK: MAF		OVER LAKE PEND OREILLE NEAR SANDPOINT, ID
DATE: 04/22/09	APPROVED: Ron G Berry	EXISTING ABUT. NO. 88 MODIFICATION DETAILS
AUTH: A090024	ASST. DIRECTOR STRUCTURES DESIGN	PLAN NO: 0045-3.9-88 / SHEET: 13 OF 37
LINE SEG: 0045		

USCG0010843/27

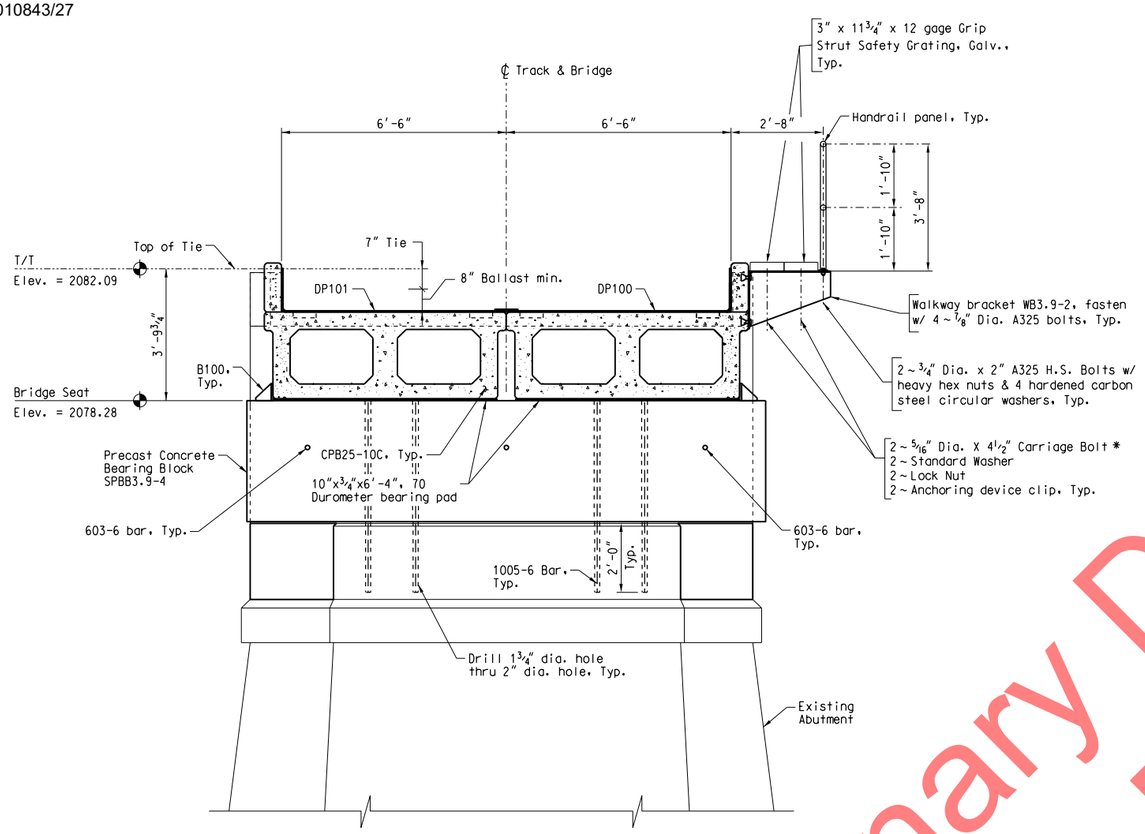

TYPICAL SECTION AT ABUT. NO. 88

Looking Railway West

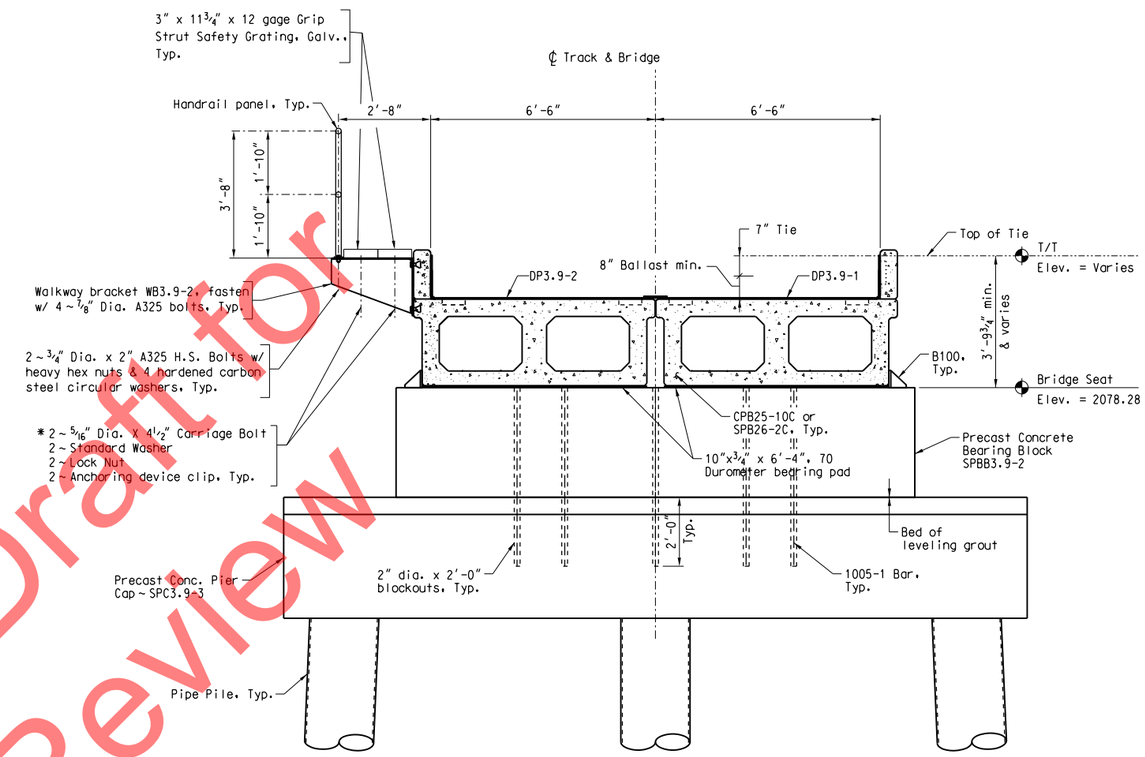

* Each Grip Strut Grating Plank that is continuous over a walkway bracket shall be connected with one carriage bolt.

TYPICAL SECTION AT PIER NO. 87 & 72

Looking Railway East

Pier 87 shown Pier 72 similar and opposite hand

(CB3.9's & Bracing omitted from view)

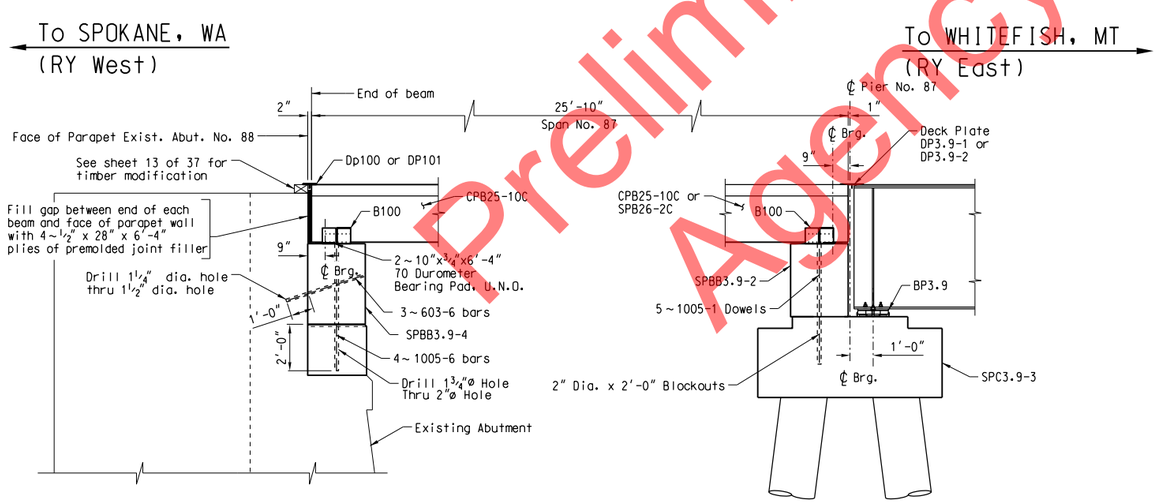

ABUT. NO. 88

PIER NO. 87 & 72

Pier 87 shown Pier 72 similar and opposite hand

BEARING BLOCK ELEVATION

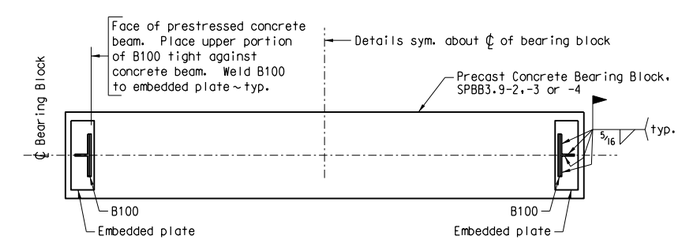

TYPICAL B100 ATTACHMENT DETAILS

ISSUED FOR CONSTRUCTION
4-22-09

Preliminary Draft for Agency Review

HANSON
Hanson Professional Services Inc.

DES: AAN	BNSF RAILWAY	SANDPOINT JCT. TO LAKESIDE JCT.	
DRAWN: CDP	BRIDGE ENGINEERING KANSAS CITY, KS	BRIDGE NUMBER 3.9	
CHECK: MAF		OVER LAKE PEND OREILLE NEAR SANDPOINT, ID	
DATE: 04/22/09	APPROVED: Ron G Berry	TYPICAL SECTIONS	
AUTH: A090024	ASST. DIRECTOR STRUCTURES DESIGN	PLAN NO: 0045-3.9-89	SHEET: 14 OF 37
LINE SEG: 0045			

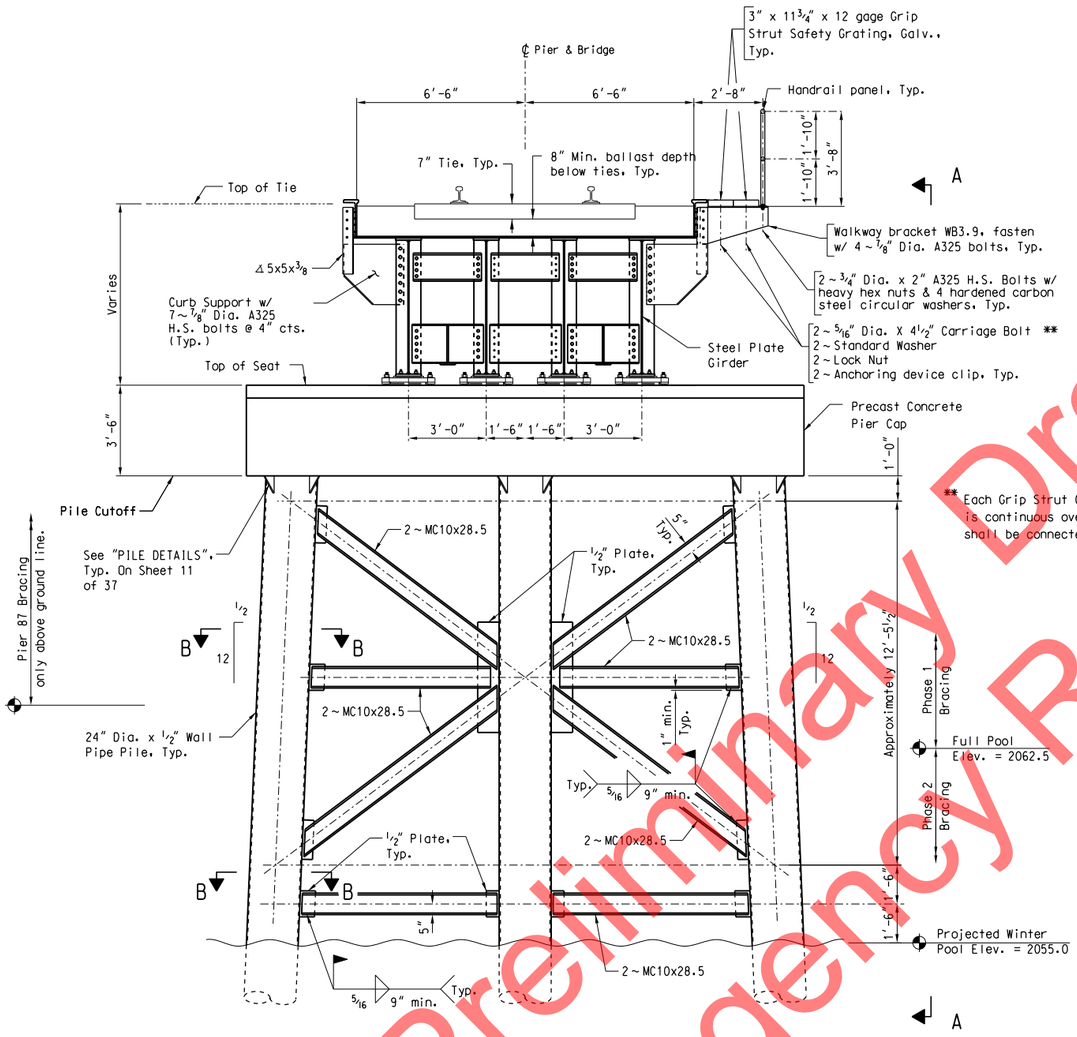

TYPICAL SECTION AT PIERS 72-86

Looking Railway West

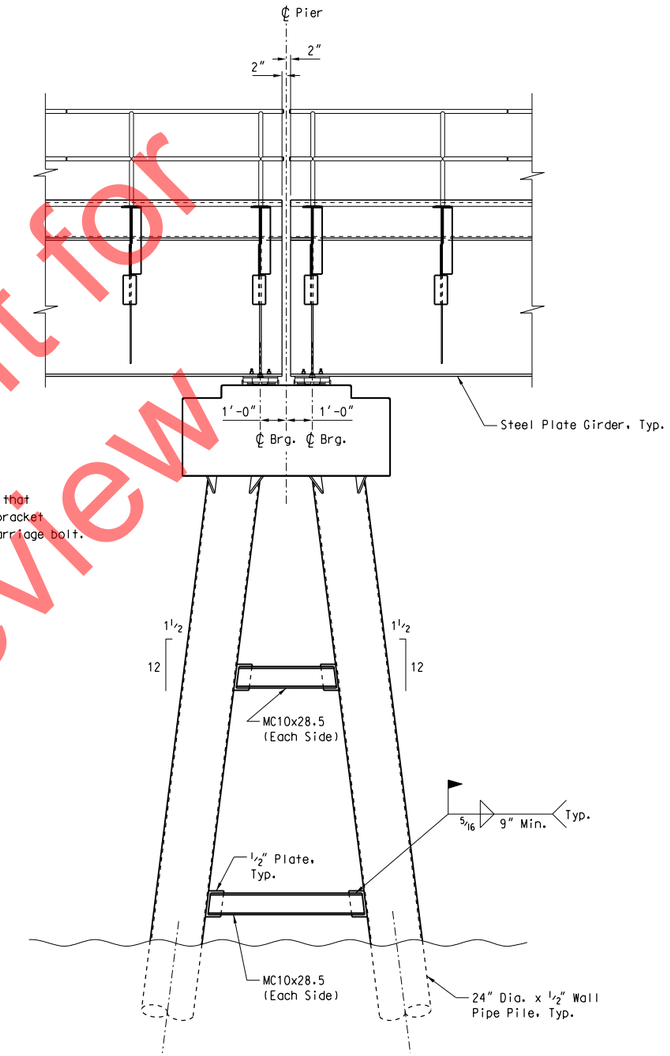

ELEVATION A-A

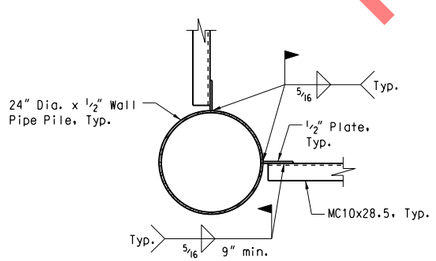

SECTION B-B

Notes:

1. Pile bracing shall be painted in accordance with Project Technical Specification Section 04710.
2. Coating on piling that is damaged during construction shall be repaired with simalar coating and application procedures.
3. Phase 1 bracing shall be installed prior to installing the new span.
   Phase 2 bracing shall be installed prior to substantial completion of the project.
4. Pier 87 to include bracing above existing ground only.

ISSUED FOR CONSTRUCTION
4-22-09

DES: AAN	BNSF RAILWAY	SANDPOINT JCT. TO LAKESIDE JCT.
DRAWN: CDP	BRIDGE ENGINEERING KANSAS CITY, KS	BRIDGE NUMBER 3.9
CHECK: MAF		OVER LAKE PEND OREILLE NEAR SANDPOINT, ID
DATE: 04/22/09	APPROVED: Ron G Berry	TYPICAL SECTIONS ~ PIERS 72-86
AUTH: A090024	ASST. DIRECTOR STRUCTURES DESIGN	PLAN NO: 0045-3.9-90
LINE SEG: 0045		SHEET: 15 OF 37

HANSON
Hanson Professional Services Inc.

Preliminary Draft for Agency Review

USCG0010863/27

EAST
TO SANDPOINT JCT. ID

WEST
TO EAST ALGOMA. ID

PLAN

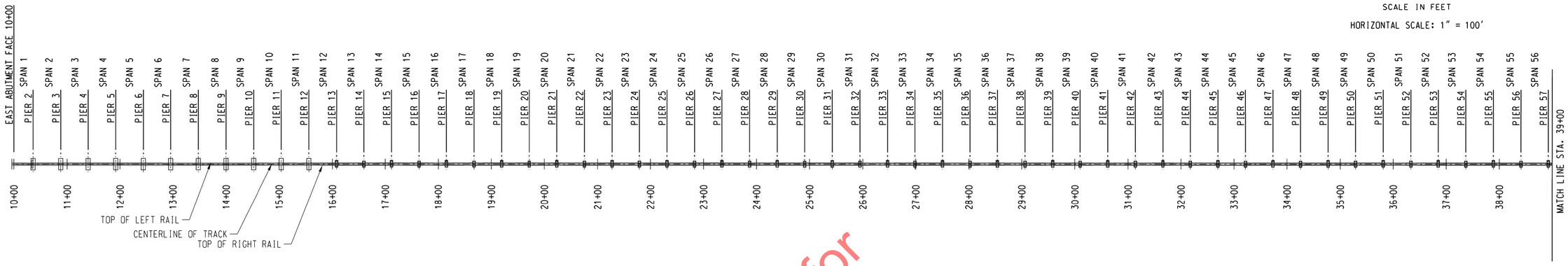

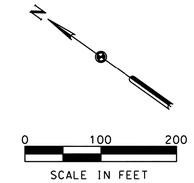

HORIZONTAL SCALE: 1" = 100'

CP#3
ELEV. = 2070.26'
SET 5/8" REBAR WITH RED
PLASTIC CAP STAMPED "DEA CONTROL"
LOCAL COORDINATE
N = 12551.55'
E = 26651.75'
STATE PLANE COORDINATE
N = 2406531.60'
E = 2432.704.71'

Preliminary Draft for Agency Review

PLAN

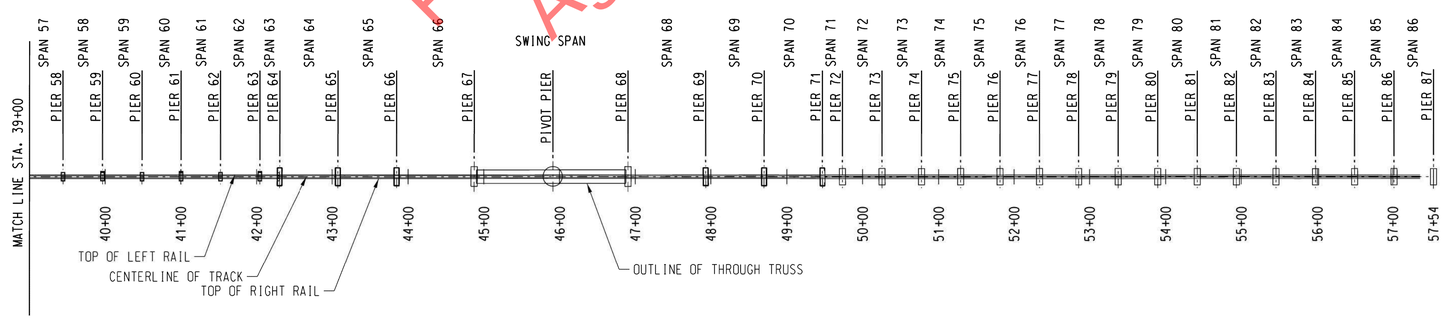

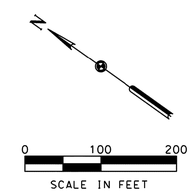

HORIZONTAL SCALE: 1" = 100'

CP#102
ELEV. = 2084.77'
SET 5/8" REBAR WITH RED
PLASTIC CAP STAMPED "DEA CONTROL"
LOCAL COORDINATE
N = 8621.84'
E = 29930.75'
STATE PLANE COORDINATE
N = 2402602.37'
E = 2435983.30'

CP#103
ELEV. = 2074.53
SET 5/8" REBAR WITH RED
PLASTIC CAP STAMPED "DEA CONTROL"
LOCAL COORDINATE
N = 8578.24'
E = 29833.75'
STATE PLANE COORDINATE
N = 2402558.77'
E = 2435886.32'

SURVEY NOTES:

NOTES:
1.) BASIS OF BEARING IS GRID NORTH.

2.) HORIZONTAL DATUM IS A LOCAL COORDINATE SYSTEM IN REFERENCE TO NAD83 2011 IDAHO STATE PLANE WEST ZONE. ALL DISTANCES ARE GROUND DISTANCES.

3.) VERTICAL DATUM IS NAVD88.

NOTES:
1.) LEFT AND RIGHT DIRECTIONS ARE BASED ON A WEST ORIENTATION LOOKING UPSTATION OF RAILROAD ALONG CENTERLINE OF TRACK.

2.) STATIONING VALUES REFLECT ASSUMPTION THAT THE EAST ABUTMENT INSIDE FACE EQUALS 10+00 AT THE TRACK CENTERLINE.

SURVEYOR'S CERTIFICATION

THIS MAP CORRECTLY REPRESENTS A TOPOGRAPHIC SURVEY PERFORMED AUGUST 22-26, 2016, BY ME OR UNDER MY DIRECTION AT THE REQUEST OF ALAN K. BLOOMQUIST, MANAGER STRUCTURES DESIGN, BNSF RAILWAY.

PRELIMINARY

ALLISON K. YOUNGER, REGISTERED PROFESSIONAL LAND SURVEYOR IDAHO REGISTRATION NO. 12724

DAVID EVANS AND ASSOCIATES INC.
908 N. HOWARD ST. SUITE 300
SPOKANE, WA 99201
Phone: 509.252.5900

811 Know what's below. Call before you dig.

DES:	BNSF RAILWAY	SANDPOINT JCT. ID TO EAST ALGOMA, ID
DRAWN: KMD	BRIDGE ENGINEERING KANSAS CITY, KS	BRIDGE NO. 003.90
CHECK: DDHA/AKY		OVER LAKE PEND OREILLE NEAR SANDPOINT, ID
DATE: SEPT. 2016		PLAN AND GENERAL NOTES
AUTH:	APPROVED:	
LINE SEG: 0045	ASST. DIRECTOR STRUCTURES DESIGN	PLAN NO: 0045-003.900-001 SHEET: 1 OF 24

File Location: :HOME$FOOOOTT19$$AOOADAKY$$SHEETS$$sandpoint Bridge$0045-003.900-001.DGN
Date Printed: 9/30/2016 Time Printed: 4:51:59 PM

USCG0010873/27

PIER PLAN & PROFILES

EAST
TO SANDPOINT JCT, ID

WEST
TO EAST ALGOMA, ID

N

0 5 10
SCALE IN FEET
HORIZONTAL SCALE: 1" = 5'

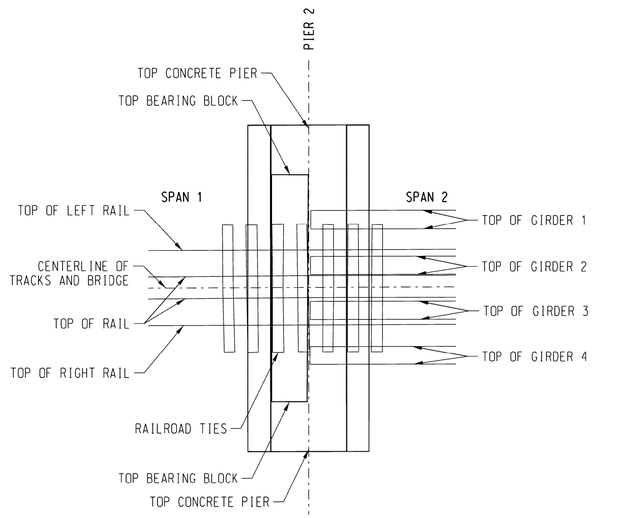

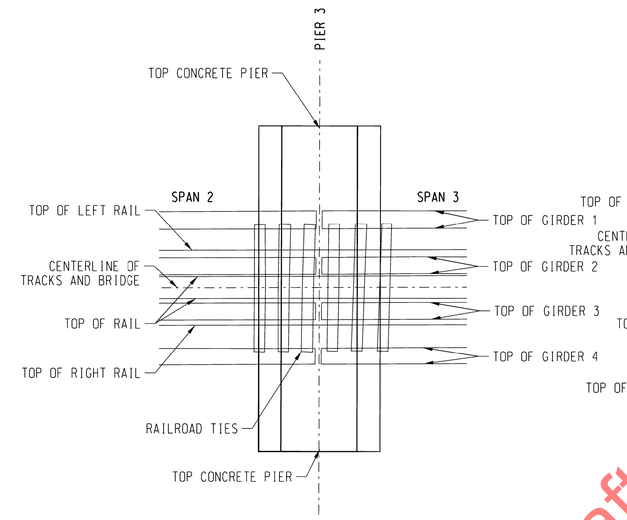

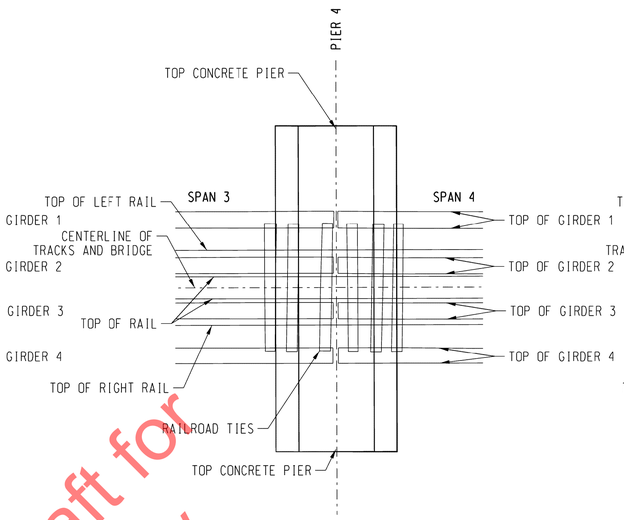

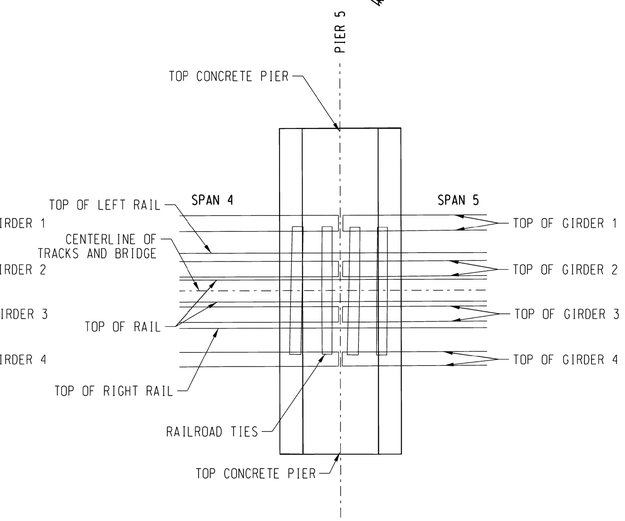

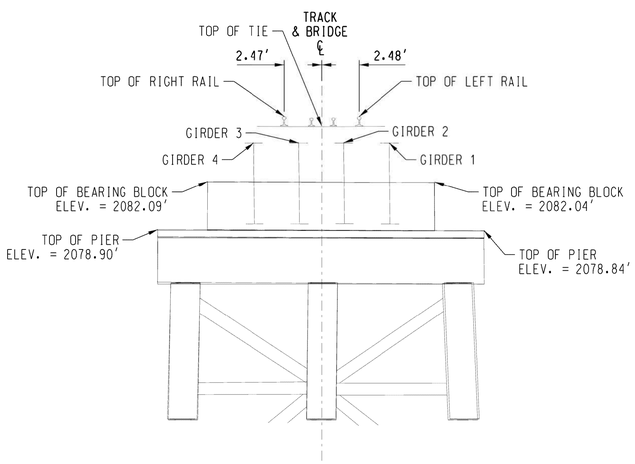

PIER 2
LOOKING RAILROAD EAST

TABLE OF ELEVATIONS			
LOCATION	TOP LEFT RAIL	TOP OF TIE	TOP RIGHT RAIL
ELEVATION	2086.39'	2085.76'	2086.39'

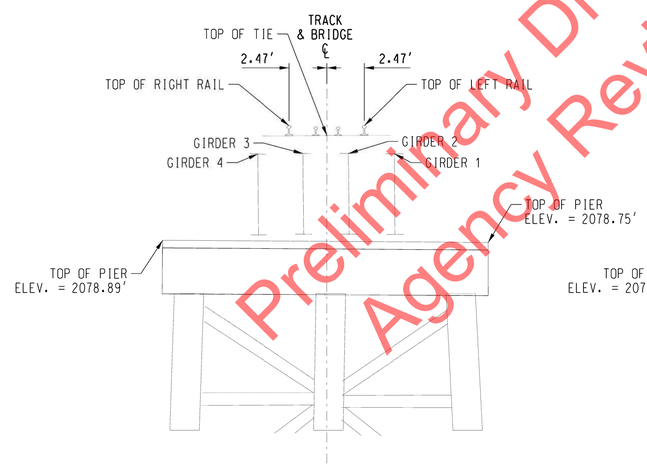

PIER 3
LOOKING RAILROAD EAST

TABLE OF ELEVATIONS			
LOCATION	TOP LEFT RAIL	TOP OF TIE	TOP RIGHT RAIL
ELEVATION	2086.47'	2085.80'	2086.46'

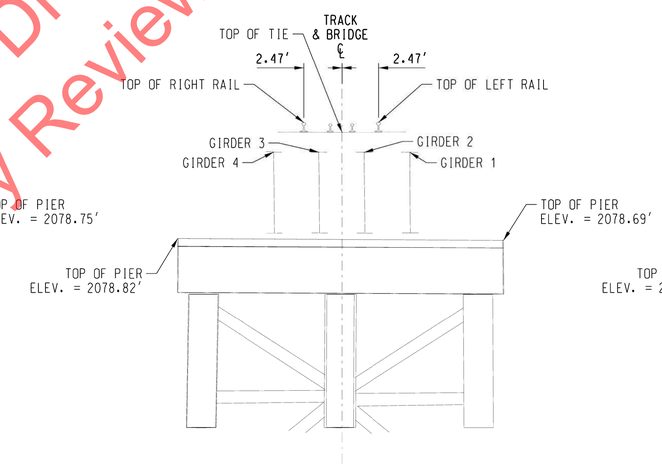

PIER 4
LOOKING RAILROAD EAST

TABLE OF ELEVATIONS			
LOCATION	TOP LEFT RAIL	TOP OF TIE	TOP RIGHT RAIL
ELEVATION	2086.51'	2085.82'	2086.50'

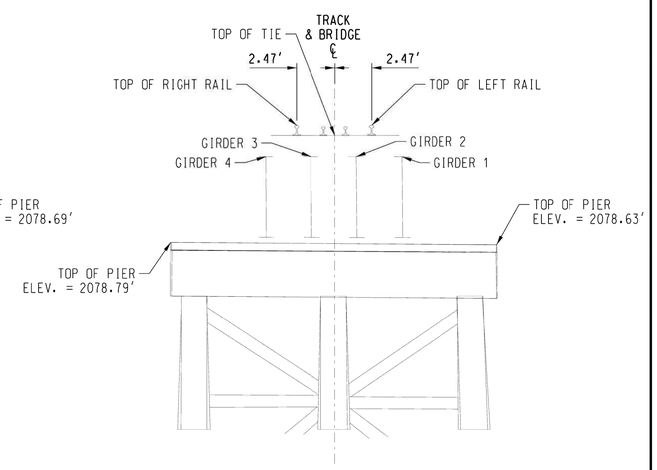

PIER 5
LOOKING RAILROAD EAST

TABLE OF ELEVATIONS			
LOCATION	TOP LEFT RAIL	TOP OF TIE	TOP RIGHT RAIL
ELEVATION	2086.53'	2085.85'	2086.52'

Preliminary Draft for Agency Review

DAVID EVANS AND ASSOCIATES INC.
908 N. HOWARD ST. SUITE 300
SPOKANE, WA 99201
Phone: 509.252.5900

811 Know what's below. Call before you dig.

NOTES:
1.) LEFT AND RIGHT DIRECTIONS ARE BASED ON A WEST ORIENTATION LOOKING UPSTATION OF RAILROAD ALONG CENTERLINE OF TRACK.

2.) STATIONING VALUES REFLECT ASSUMPTION THAT THE EAST ABUTMENT INSIDE FACE EQUALS 10+00 AT THE TRACK CENTERLINE.

SURVEYOR'S CERTIFICATION

THIS MAP CORRECTLY REPRESENTS A TOPOGRAPHIC SURVEY PERFORMED AUGUST 22-26, 2016, BY ME OR UNDER MY DIRECTION AT THE REQUEST OF ALAN K. BLOOMQUIST, MANAGER STRUCTURES DESIGN, BNSF RAILWAY.

PRELIMINARY

ALLISON K. YOUNGER, REGISTERED PROFESSIONAL LAND SURVEYOR IDAHO REGISTRATION NO. 12724

DES:	
DRAWN:	KMD
CHECK:	DDHA/AKY
DATE:	SEPT. 2016
AUTH:	
LINE SEG:	0045

BNSF RAILWAY
BRIDGE ENGINEERING KANSAS CITY, KS
APPROVED:
ASST. DIRECTOR STRUCTURES DESIGN

SANDPOINT JCT, ID TO EAST ALGOMA, ID
BRIDGE NO. 003.90
OVER LAKE PEND OREILLE NEAR SANDPOINT, ID
PIER PLAN & PROFILES

PLAN NO: 0045-003.900-002 SHEET: 2 OF 24

File Location: \\BNSFCORPDOOT118\BIDDOCAD\SHEETS\Sandpoint Bridge\0045-003.900-002.DGN
Date Printed: 9/30/2016 Time Printed: 4:52:27 PM

USCG0010883/27

PIER PLAN & PROFILES

EAST
TO SANDPOINT JCT, ID

WEST
TO EAST ALGOMA, ID

N

0 5 10
SCALE IN FEET
HORIZONTAL SCALE: 1" = 5'

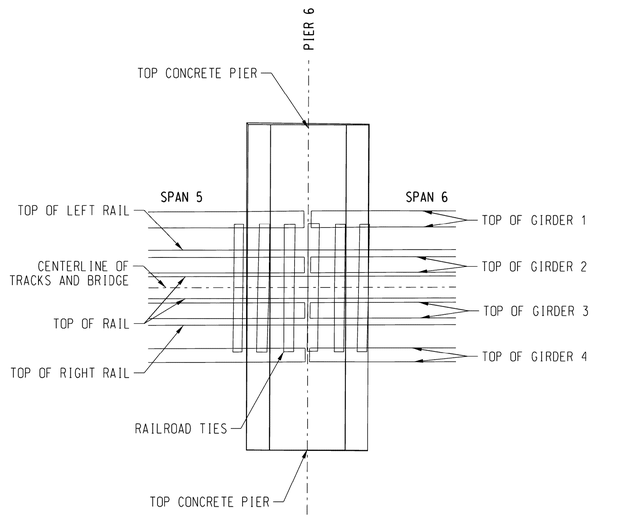

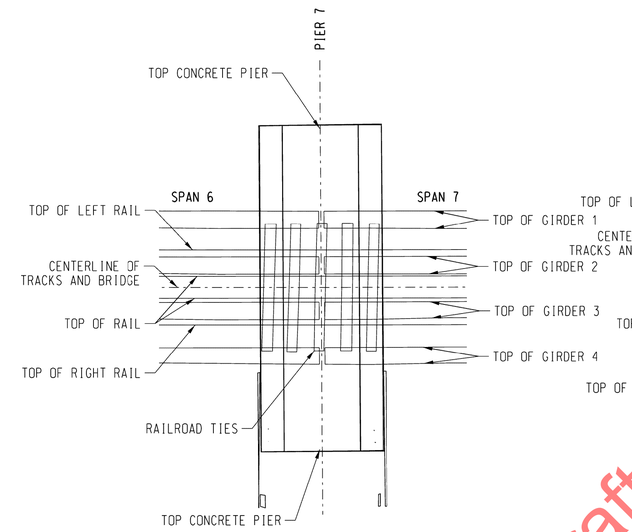

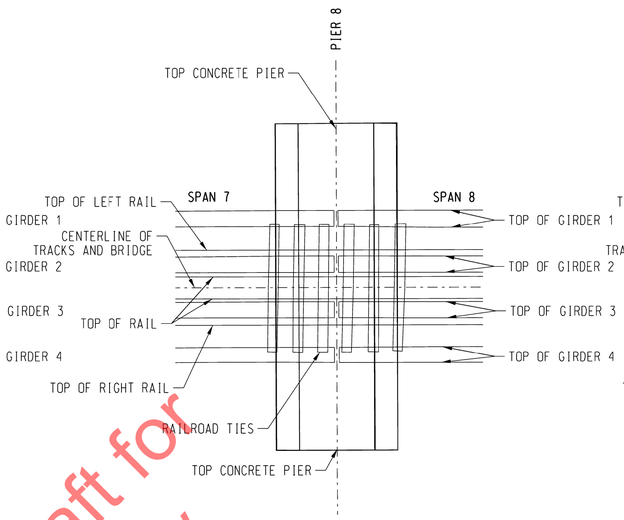

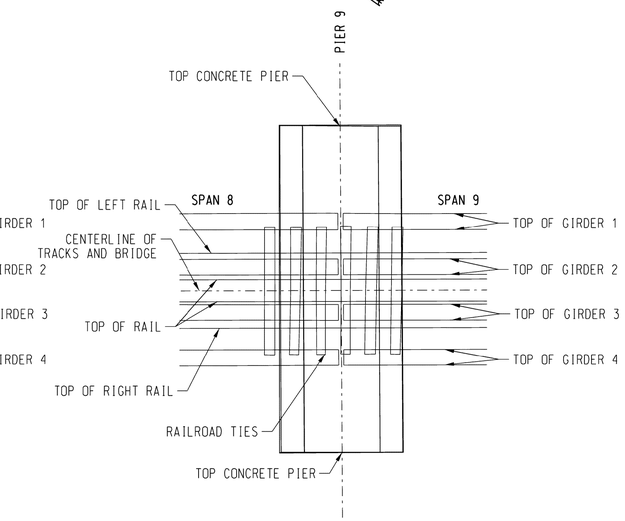

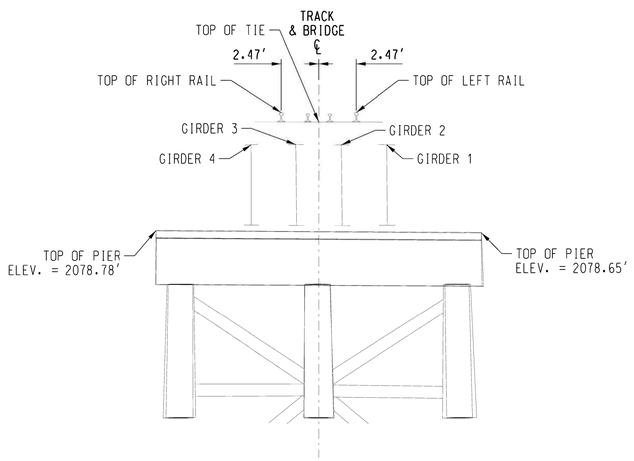

PIER 6
LOOKING RAILROAD EAST

TABLE OF ELEVATIONS			
LOCATION	TOP LEFT RAIL	TOP OF TIE	TOP RIGHT RAIL
ELEVATION	2086.60'	2085.95'	2086.60'

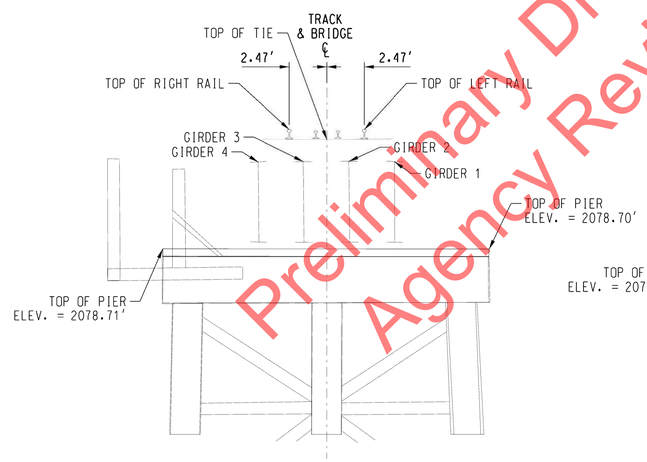

PIER 7
LOOKING RAILROAD EAST

TABLE OF ELEVATIONS			
LOCATION	TOP LEFT RAIL	TOP OF TIE	TOP RIGHT RAIL
ELEVATION	2086.59'	2085.93'	2086.58'

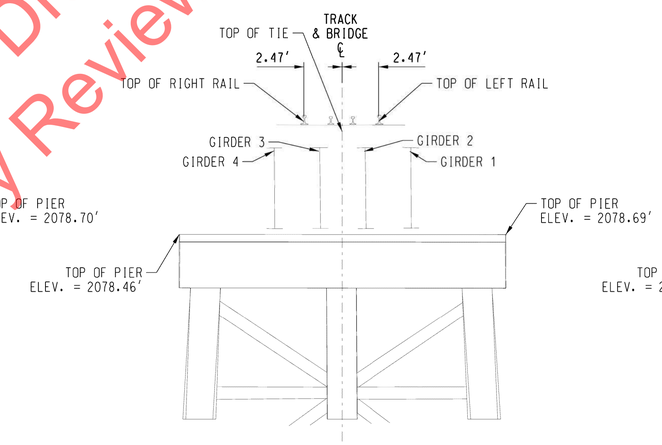

PIER 8
LOOKING RAILROAD EAST

TABLE OF ELEVATIONS			
LOCATION	TOP LEFT RAIL	TOP OF TIE	TOP RIGHT RAIL
ELEVATION	2086.59'	2085.93'	2086.59'

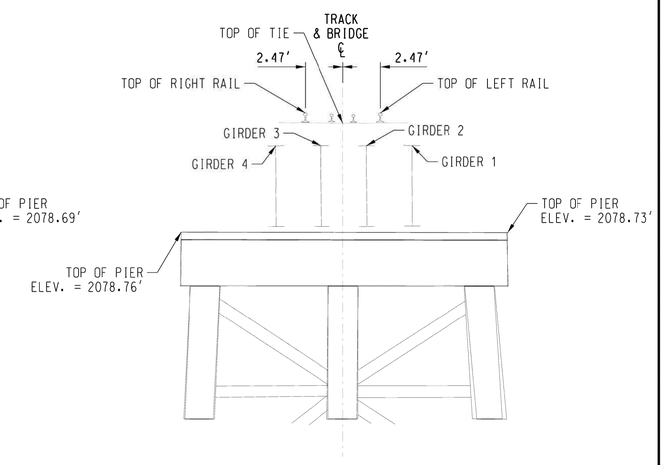

PIER 9
LOOKING RAILROAD EAST

TABLE OF ELEVATIONS			
LOCATION	TOP LEFT RAIL	TOP OF TIE	TOP RIGHT RAIL
ELEVATION	2086.63'	2085.96'	2086.63'

Preliminary Draft for Agency Review

DAVID EVANS AND ASSOCIATES INC.
908 N. HOWARD ST. SUITE 300
SPOKANE, WA 99201
Phone: 509.252.5900

811 Know what's below. Call before you dig.

NOTES:
1.) LEFT AND RIGHT DIRECTIONS ARE BASED ON A WEST ORIENTATION LOOKING UPSTATION OF RAILROAD ALONG CENTERLINE OF TRACK.

2.) STATIONING VALUES REFLECT ASSUMPTION THAT THE EAST ABUTMENT INSIDE FACE EQUALS 10+00 AT THE TRACK CENTERLINE.

SURVEYOR'S CERTIFICATION

THIS MAP CORRECTLY REPRESENTS A TOPOGRAPHIC SURVEY PERFORMED AUGUST 22-26, 2016, BY ME OR UNDER MY DIRECTION AT THE REQUEST OF ALAN K. BLOOMQUIST, MANAGER STRUCTURES DESIGN, BNSF RAILWAY.

PRELIMINARY

ALLISON K. YOUNGER, REGISTERED PROFESSIONAL LAND SURVEYOR IDAHO REGISTRATION NO. 12724

DES:	BNSF RAILWAY	SANDPOINT JCT, ID TO EAST ALGOMA, ID
DRAWN: KMD	BRIDGE ENGINEERING KANSAS CITY, KS	BRIDGE NO. 003.90
CHECK: DDHA/AKY		OVER LAKE PEND OREILLE NEAR SANDPOINT, ID
DATE: SEPT. 2016		PIER PLAN & PROFILES
AUTH:	APPROVED:	
LINE SEG: 0045	ASST. DIRECTOR STRUCTURES DESIGN	PLAN NO: 0045-003.900-003 SHEET: 3 OF 24

File Location: I:\BNSF\00001\1\400\CAD\W\SHEETS\Sandpoint Bridge\0045-003.900-003.DGN
Date Printed: 9/30/2016 Time Printed: 4:52:55 PM

USCG0010893/27

PIER PLAN & PROFILES

EAST
TO SANDPOINT JCT, ID

WEST
TO EAST ALGOMA, ID

N

0 5 10
SCALE IN FEET
HORIZONTAL SCALE: 1" = 5'

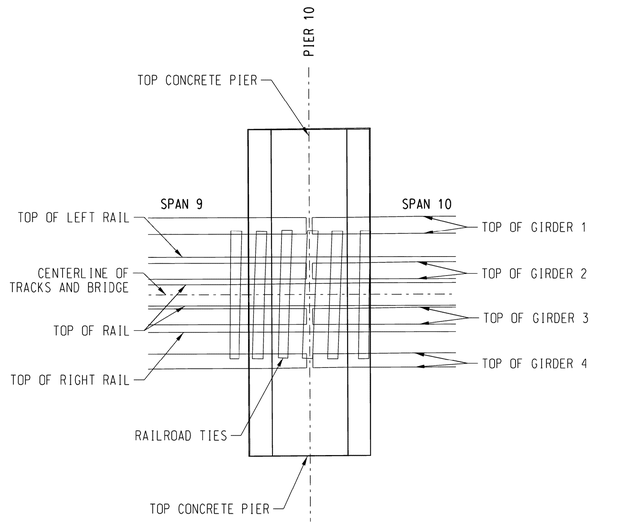

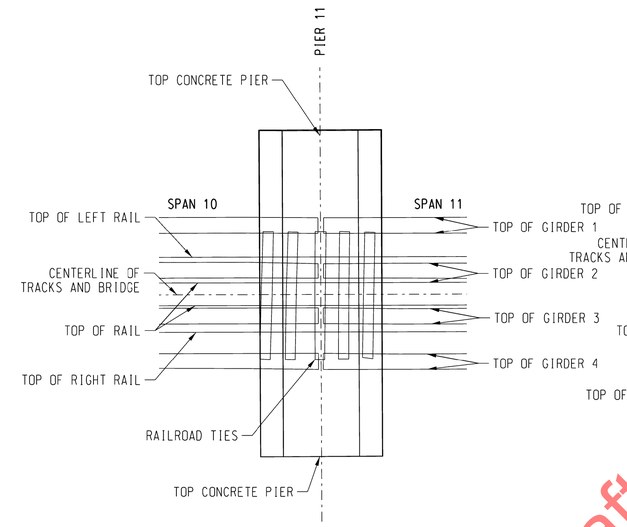

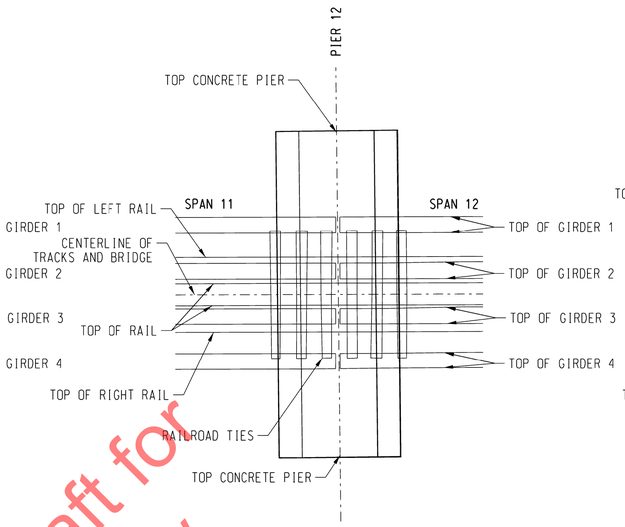

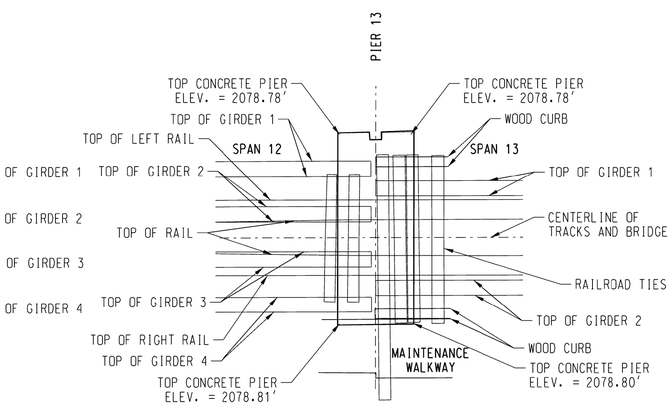

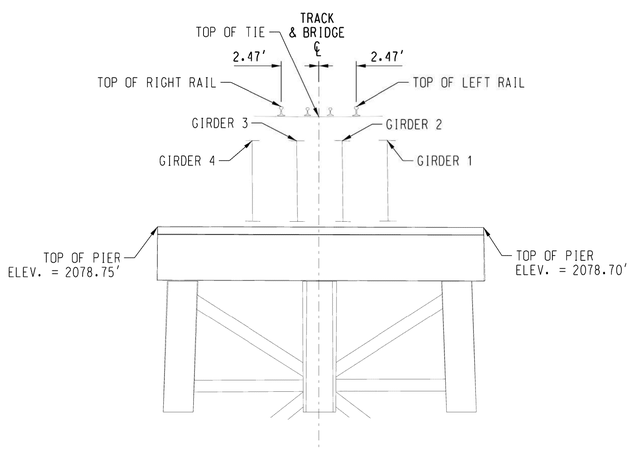

PIER 10
LOOKING RAILROAD EAST

TABLE OF ELEVATIONS			
LOCATION	TOP LEFT RAIL	TOP OF TIE	TOP RIGHT RAIL
ELEVATION	2086.69'	2086.02'	2086.69'

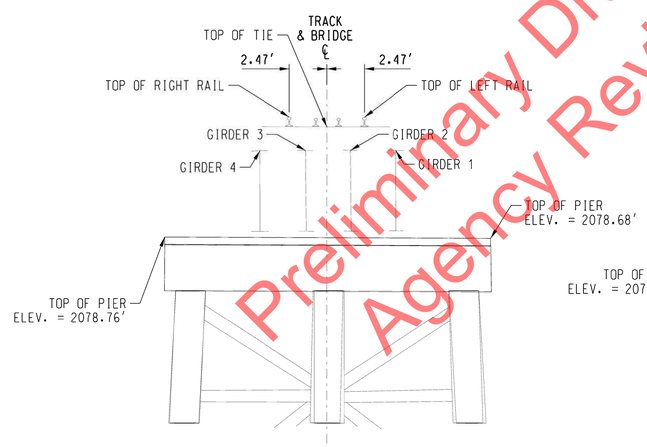

PIER 11
LOOKING RAILROAD EAST

TABLE OF ELEVATIONS			
LOCATION	TOP LEFT RAIL	TOP OF TIE	TOP RIGHT RAIL
ELEVATION	2086.70'	2086.04'	2086.71'

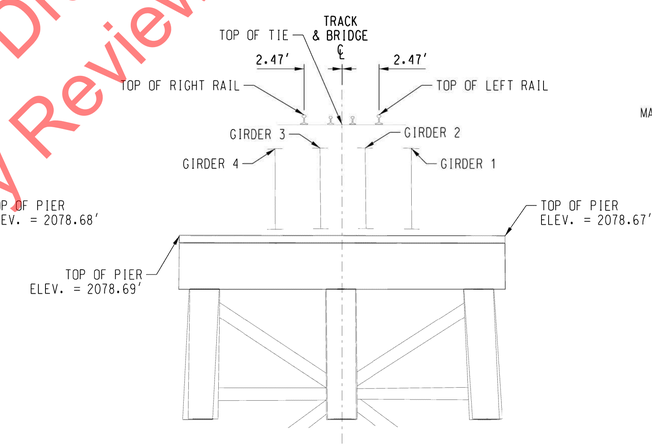

PIER 12
LOOKING RAILROAD EAST

TABLE OF ELEVATIONS			
LOCATION	TOP LEFT RAIL	TOP OF TIE	TOP RIGHT RAIL
ELEVATION	2086.66'	2086.01'	2086.67'

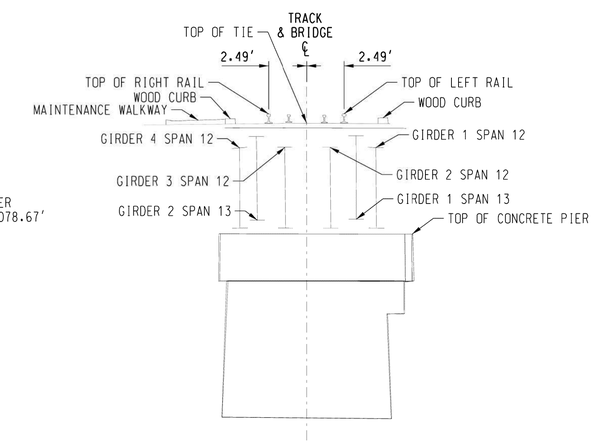

PIER 13
LOOKING RAILROAD EAST

TABLE OF ELEVATIONS			
LOCATION	TOP LEFT RAIL	TOP OF TIE	TOP RIGHT RAIL
ELEVATION	2086.75'	2086.11'	2086.73'

TABLE OF GIRDER ELEVATIONS		
LOCATION	TOP OF GIRDER	BOTTOM OF GIRDER
GIRDER 1 SPAN 12	2084.50'	2079.18'
GIRDER 2 SPAN 12	2084.52'	2079.18'
GIRDER 3 SPAN 12	2084.53'	2079.18'
GIRDER 4 SPAN 12	2084.49'	2079.18'
GIRDER 1 SPAN 13	2085.28'	2079.77'
GIRDER 2 SPAN 13	2085.24'	2079.70'

Preliminary Draft for Agency Review

NOTES:
1.) LEFT AND RIGHT DIRECTIONS ARE BASED ON A WEST ORIENTATION LOOKING UPSTATION OF RAILROAD ALONG CENTERLINE OF TRACK.

2.) STATIONING VALUES REFLECT ASSUMPTION THAT THE EAST ABUTMENT INSIDE FACE EQUALS 10+00 AT THE TRACK CENTERLINE.

SURVEYOR'S CERTIFICATION

THIS MAP CORRECTLY REPRESENTS A TOPOGRAPHIC SURVEY PERFORMED AUGUST 22-26, 2016, BY ME OR UNDER MY DIRECTION AT THE REQUEST OF ALAN K. BLOOMQUIST, MANAGER STRUCTURES DESIGN, BNSF RAILWAY.

PRELIMINARY

ALLISON K. YOUNGER, REGISTERED PROFESSIONAL LAND SURVEYOR IDAHO REGISTRATION NO. 12724

DAVID EVANS AND ASSOCIATES INC.
908 N. HOWARD ST. SUITE 300
SPOKANE, WA 99201
Phone: 509.252.5900

811 Know what's below. Call before you dig.

DES:	BNSF RAILWAY	SANDPOINT JCT, ID TO EAST ALGOMA, ID
DRAWN: KMD	BRIDGE ENGINEERING KANSAS CITY, KS	BRIDGE NO. 003.90
CHECK: DDHA/AKY		OVER LAKE PEND OREILLE NEAR SANDPOINT, ID
DATE: SEPT. 2016		PIER PLAN & PROFILES
AUTH:	APPROVED:	
LINE SEG: 0045	ASST. DIRECTOR STRUCTURES DESIGN	PLAN NO: 0045-003.900-004 SHEET: 4 OF 24

File Location: I:\BNSF\0000011\04\DDCAD\W\SHEETS\Sandpoint Bridge\0045-003.900-004.DGN

Date Printed: 9/30/2016 Time Printed: 4:53:26 PM

PIER PLAN & PROFILES

EAST
TO SANDPOINT JCT, ID

WEST
TO EAST ALGOMA, ID

N

0 5 10
SCALE IN FEET
HORIZONTAL SCALE: 1" = 5'

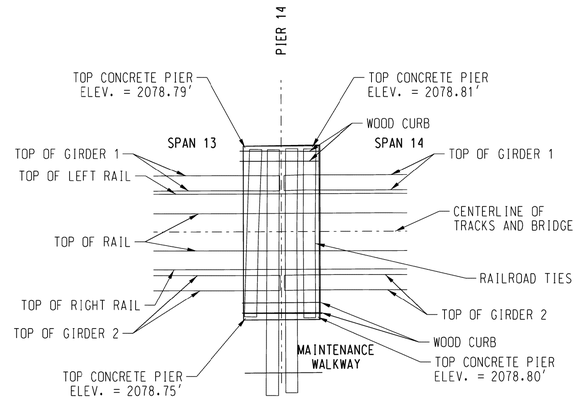

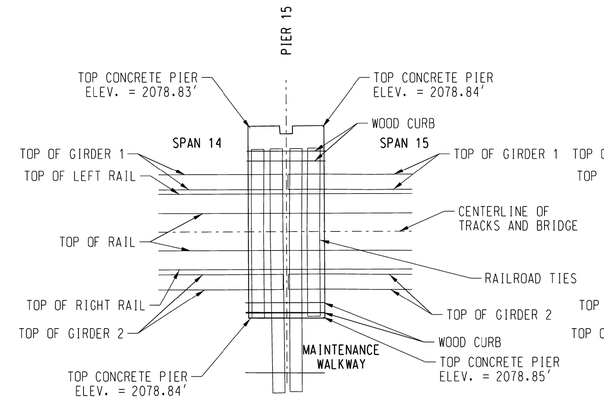

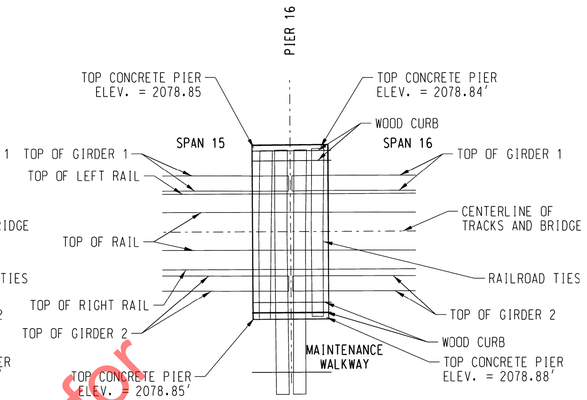

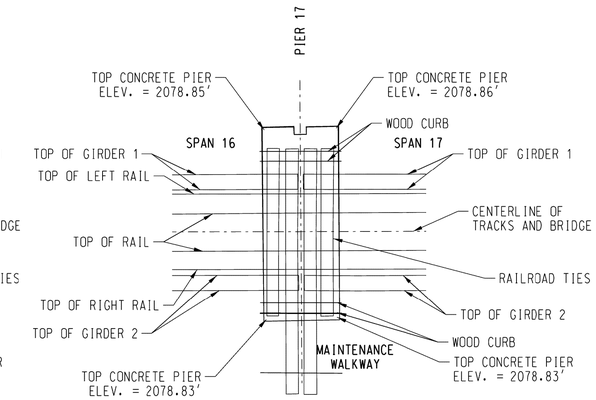

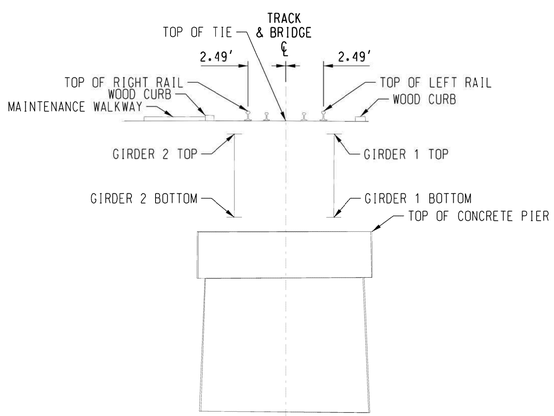

PIER 14
LOOKING RAILROAD EAST

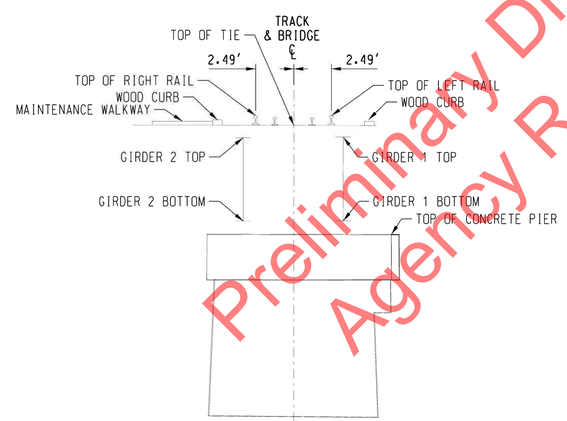

PIER 15
LOOKING RAILROAD EAST

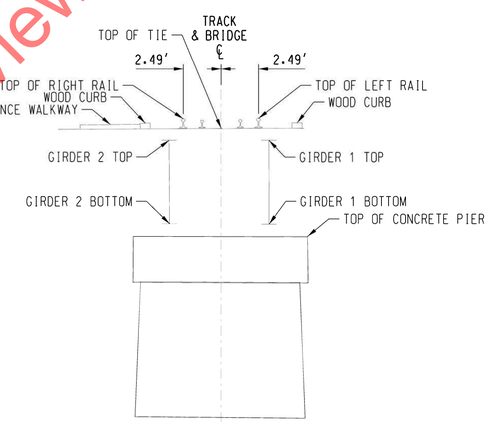

PIER 16
LOOKING RAILROAD EAST

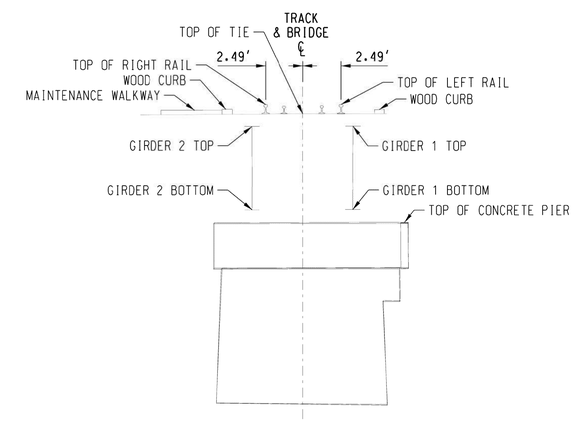

PIER 17
LOOKING RAILROAD EAST

Preliminary Draft for Agency Review

TABLE OF ELEVATIONS

LOCATION	TOP LEFT RAIL	TOP OF TIE	TOP RIGHT RAIL
ELEVATION	2086.75'	2086.09'	2086.75'

TABLE OF GIRDER ELEVATIONS

LOCATION	TOP OF GIRDER	BOTTOM OF GIRDER
GIRDER 1 SPAN 13	2085.25'	2079.73'
GIRDER 2 SPAN 13	2085.25'	2079.74'
GIRDER 1 SPAN 14	2085.26'	2079.73'
GIRDER 2 SPAN 14	2085.25'	2079.74'

TABLE OF ELEVATIONS

LOCATION	TOP LEFT RAIL	TOP OF TIE	TOP RIGHT RAIL
ELEVATION	2086.70'	2086.06'	2086.70'

TABLE OF GIRDER ELEVATIONS

LOCATION	TOP OF GIRDER	BOTTOM OF GIRDER
GIRDER 1 SPAN 14	2085.29'	2079.75'
GIRDER 2 SPAN 14	2085.24'	2079.72'
GIRDER 1 SPAN 15	2085.28'	2079.74'
GIRDER 2 SPAN 15	2085.24'	2079.73'

TABLE OF ELEVATIONS

LOCATION	TOP LEFT RAIL	TOP OF TIE	TOP RIGHT RAIL
ELEVATION	2086.66'	2085.98'	2086.63'

TABLE OF GIRDER ELEVATIONS

LOCATION	TOP OF GIRDER	BOTTOM OF GIRDER
GIRDER 1 SPAN 15	2085.22'	2079.67'
GIRDER 2 SPAN 15	2085.22'	2079.69'
GIRDER 1 SPAN 16	2085.22'	2079.67'
GIRDER 2 SPAN 16	2085.22'	2079.69'

TABLE OF ELEVATIONS

LOCATION	TOP LEFT RAIL	TOP OF TIE	TOP RIGHT RAIL
ELEVATION	2086.70'	2086.06'	2086.69'

TABLE OF GIRDER ELEVATIONS

LOCATION	TOP OF GIRDER	BOTTOM OF GIRDER
GIRDER 1 SPAN 16	2085.25'	2079.73'
GIRDER 2 SPAN 16	2085.23'	2079.72'
GIRDER 1 SPAN 17	2085.25'	2079.73'
GIRDER 2 SPAN 17	2085.22'	2079.71'

DAVID EVANS AND ASSOCIATES INC.
908 N. HOWARD ST. SUITE 300
SPOKANE, WA 99201
Phone: 509.252.5900

811 Know what's below. Call before you dig.

NOTES:
1.) LEFT AND RIGHT DIRECTIONS ARE BASED ON A WEST ORIENTATION LOOKING UPSTATION OF RAILROAD ALONG CENTERLINE OF TRACK.

2.) STATIONING VALUES REFLECT ASSUMPTION THAT THE EAST ABUTMENT INSIDE FACE EQUALS 10+00 AT THE TRACK CENTERLINE.

SURVEYOR'S CERTIFICATION

THIS MAP CORRECTLY REPRESENTS A TOPOGRAPHIC SURVEY PERFORMED AUGUST 22-26, 2016, BY ME OR UNDER MY DIRECTION AT THE REQUEST OF ALAN K. BLOOMQUIST, MANAGER STRUCTURES DESIGN, BNSF RAILWAY.

PRELIMINARY

ALLISON K. YOUNGER, REGISTERED PROFESSIONAL LAND SURVEYOR IDAHO REGISTRATION NO. 12724

DES:	
DRAWN:	KMD
CHECK:	DDHA/AKY
DATE:	SEPT. 2016
AUTH:	
LINE SEG:	0045

BNSF RAILWAY
BRIDGE ENGINEERING KANSAS CITY, KS

APPROVED: _____
ASST. DIRECTOR STRUCTURES DESIGN

SANDPOINT JCT, ID TO EAST ALGOMA, ID
BRIDGE NO. 003.90
OVER LAKE PEND OREILLE NEAR SANDPOINT, ID
PIER PLAN & PROFILES

PLAN NO: 0045-003.900-005 SHEET: 5 OF 24

File Location: J:\BNSF\0000011\400\CAD\SHEETS\Sandpoint Bridge\0045-003.900-005.DGN

Date Printed: 9/30/2016 Time Printed: 4:53:57 PM

USCG0010913/27

PIER PLAN & PROFILES

EAST
TO SANDPOINT JCT, ID

WEST
TO EAST ALGOMA, ID

N

0 5 10
SCALE IN FEET
HORIZONTAL SCALE: 1" = 5'

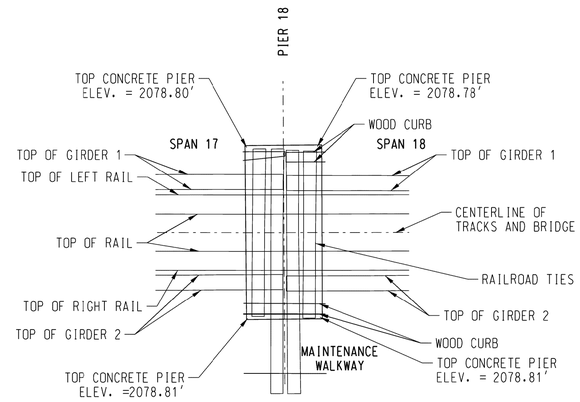

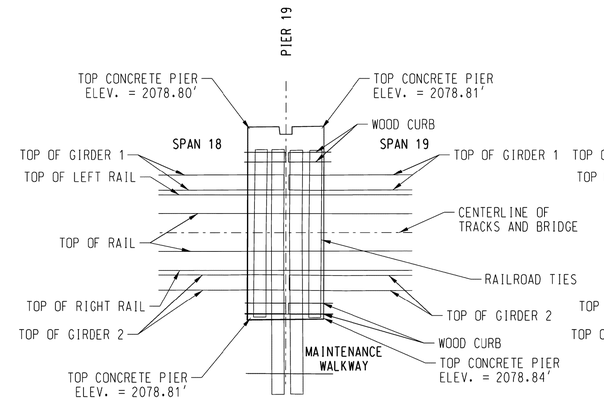

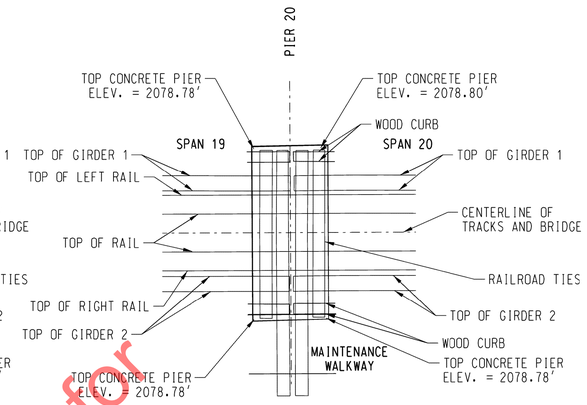

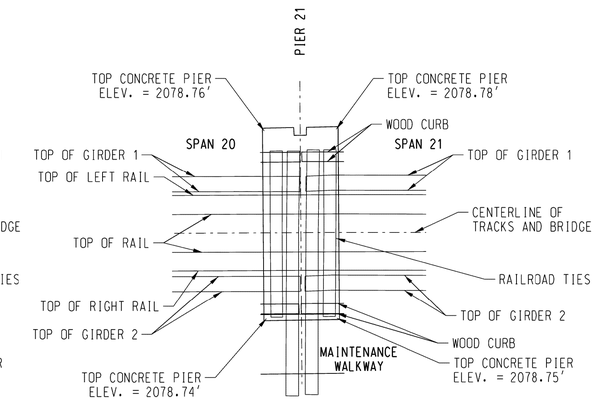

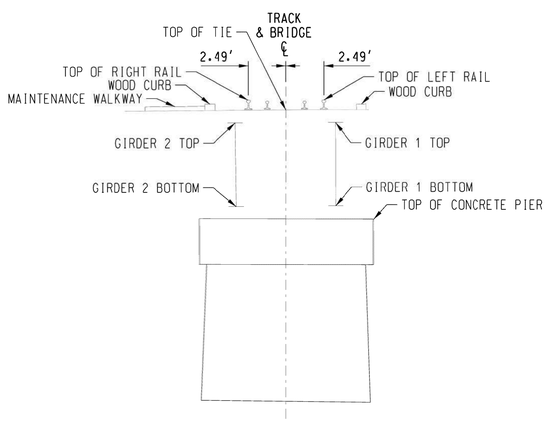

PIER 18
LOOKING RAILROAD EAST

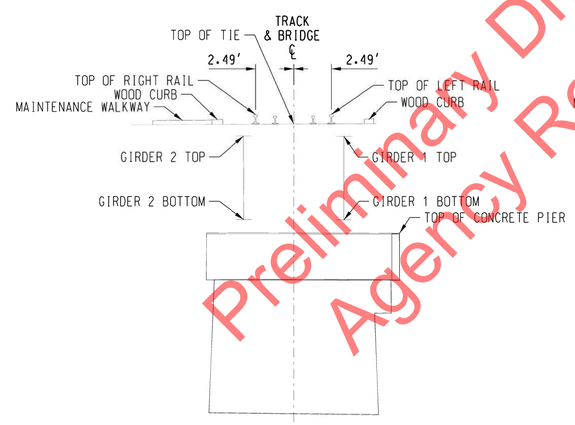

PIER 19
LOOKING RAILROAD EAST

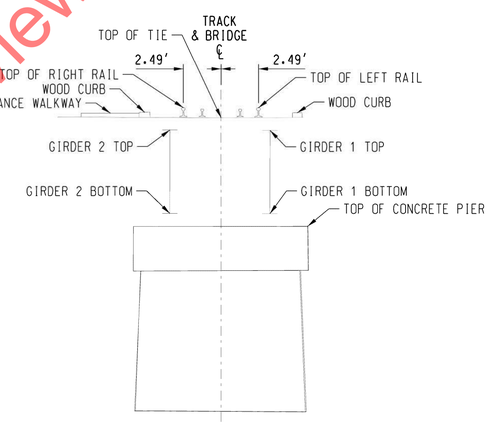

PIER 20
LOOKING RAILROAD EAST

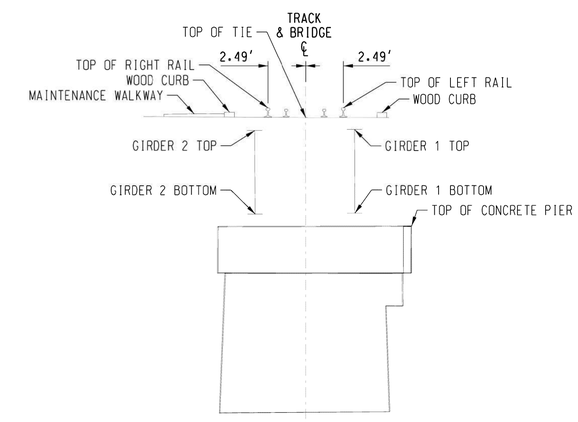

PIER 21
LOOKING RAILROAD EAST

Preliminary Draft for Agency Review

TABLE OF ELEVATIONS

LOCATION	TOP LEFT RAIL	TOP OF TIE	TOP RIGHT RAIL
ELEVATION	2086.66'	2086.00'	2086.65'

TABLE OF GIRDER ELEVATIONS

LOCATION	TOP OF GIRDER	BOTTOM OF GIRDER
GIRDER 1 SPAN 17	2085.16'	2079.63'
GIRDER 2 SPAN 17	2085.19'	2079.67'
GIRDER 1 SPAN 18	2085.18'	2079.66'
GIRDER 2 SPAN 18	2085.15'	2079.61'

TABLE OF ELEVATIONS

LOCATION	TOP LEFT RAIL	TOP OF TIE	TOP RIGHT RAIL
ELEVATION	2086.69'	2086.03'	2086.67'

TABLE OF GIRDER ELEVATIONS

LOCATION	TOP OF GIRDER	BOTTOM OF GIRDER
GIRDER 1 SPAN 18	2085.23'	2079.70'
GIRDER 2 SPAN 18	2085.26'	2079.73'
GIRDER 1 SPAN 19	2085.24'	2079.70'
GIRDER 2 SPAN 19	2085.25'	2079.72'

TABLE OF ELEVATIONS

LOCATION	TOP LEFT RAIL	TOP OF TIE	TOP RIGHT RAIL
ELEVATION	2086.62'	2085.97'	2086.63'

TABLE OF GIRDER ELEVATIONS

LOCATION	TOP OF GIRDER	BOTTOM OF GIRDER
GIRDER 1 SPAN 19	2085.14'	2079.62'
GIRDER 2 SPAN 19	2085.17'	2079.64'
GIRDER 1 SPAN 20	2085.14'	2079.62'
GIRDER 2 SPAN 20	2085.17'	2079.64'

TABLE OF ELEVATIONS

LOCATION	TOP LEFT RAIL	TOP OF TIE	TOP RIGHT RAIL
ELEVATION	2086.62'	2085.97'	2086.61'

TABLE OF GIRDER ELEVATIONS

LOCATION	TOP OF GIRDER	BOTTOM OF GIRDER
GIRDER 1 SPAN 20	2085.17'	2079.64'
GIRDER 2 SPAN 20	2085.10'	2079.57'
GIRDER 1 SPAN 21	2085.16'	2079.63'
GIRDER 2 SPAN 21	2085.10'	2079.57'

DAVID EVANS AND ASSOCIATES INC.
908 N. HOWARD ST. SUITE 300
SPOKANE, WA 99201
Phone: 509.252.5900

811 Know what's below. Call before you dig.

NOTES:
1.) LEFT AND RIGHT DIRECTIONS ARE BASED ON A WEST ORIENTATION LOOKING UPSTATION OF RAILROAD ALONG CENTERLINE OF TRACK.

2.) STATIONING VALUES REFLECT ASSUMPTION THAT THE EAST ABUTMENT INSIDE FACE EQUALS 10+00 AT THE TRACK CENTERLINE.

SURVEYOR'S CERTIFICATION

THIS MAP CORRECTLY REPRESENTS A TOPOGRAPHIC SURVEY PERFORMED AUGUST 22-26, 2016, BY ME OR UNDER MY DIRECTION AT THE REQUEST OF ALAN K. BLOOMQUIST, MANAGER STRUCTURES DESIGN, BNSF RAILWAY.

PRELIMINARY

ALLISON K. YOUNGER, REGISTERED PROFESSIONAL LAND SURVEYOR IDAHO REGISTRATION NO. 12724

DES:	
DRAWN:	KMD
CHECK:	DDHA/AKY
DATE:	SEPT. 2016
AUTH:	
LINE SEG:	0045

BNSF RAILWAY
BRIDGE ENGINEERING KANSAS CITY, KS

APPROVED: _____
ASST. DIRECTOR STRUCTURES DESIGN

SANDPOINT JCT, ID TO EAST ALGOMA, ID
BRIDGE NO. 003.90
OVER LAKE PEND OREILLE NEAR SANDPOINT, ID
PIER PLAN & PROFILES

PLAN NO: 0045-003.900-006 SHEET: 6 OF 24

File Location: J:\BNSF\0000011\400\CAD\SV\SHEETS\Sandpoint Bridge\0045-003.900-006.DGN

Date Printed: 9/30/2016 Time Printed: 4:54:30 PM

USCG0010923/27

PIER PLAN & PROFILES

EAST
TO SANDPOINT JCT, ID

WEST
TO EAST ALGOMA, ID

N

0 5 10
SCALE IN FEET
HORIZONTAL SCALE: 1" = 5'

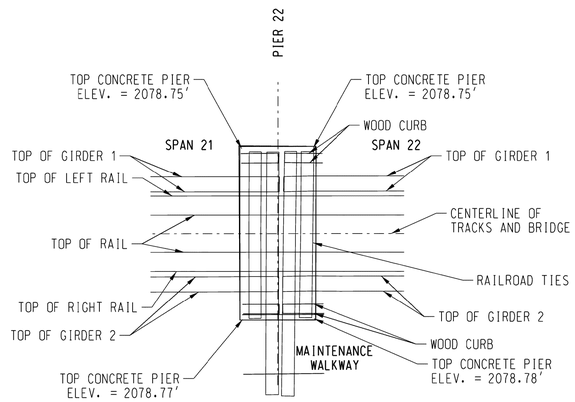

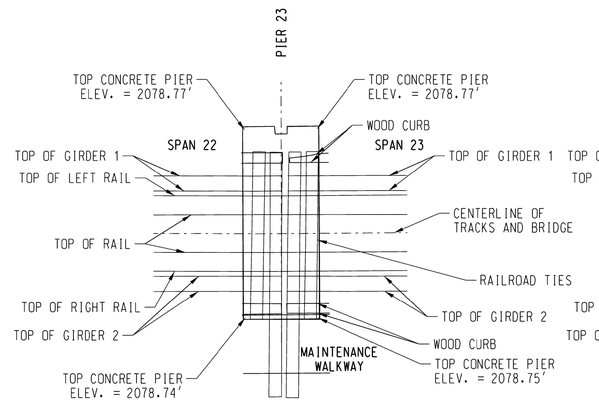

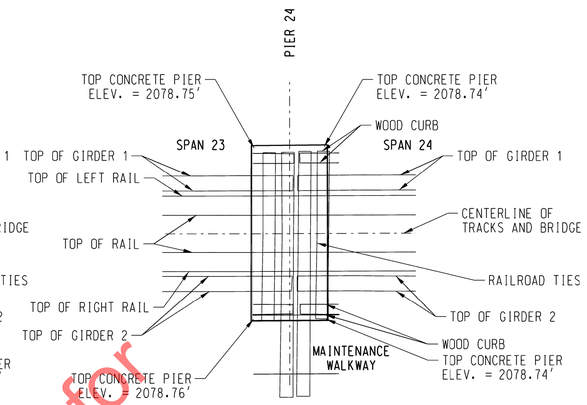

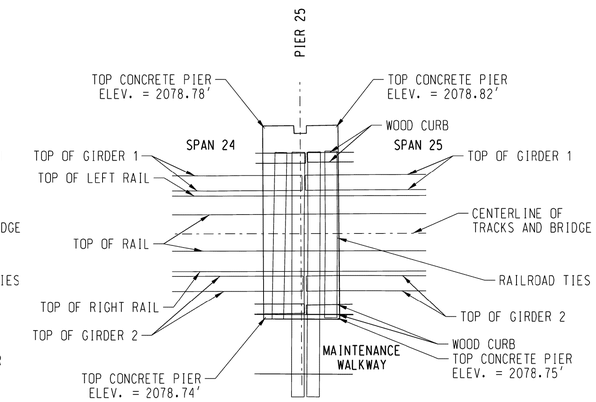

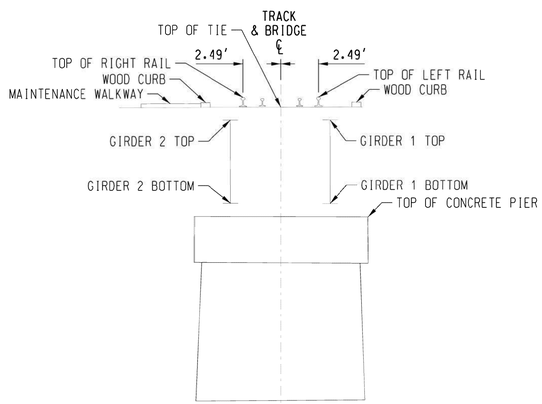

PIER 22
LOOKING RAILROAD EAST

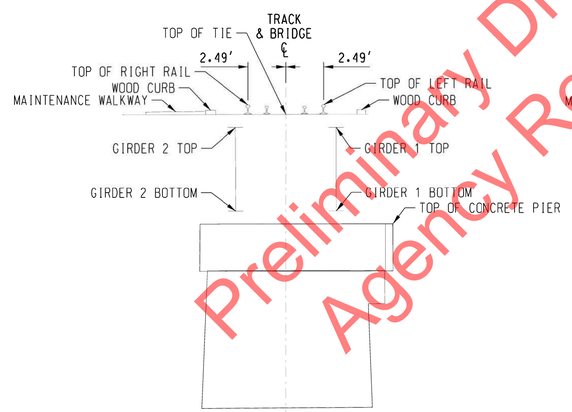

PIER 23
LOOKING RAILROAD EAST

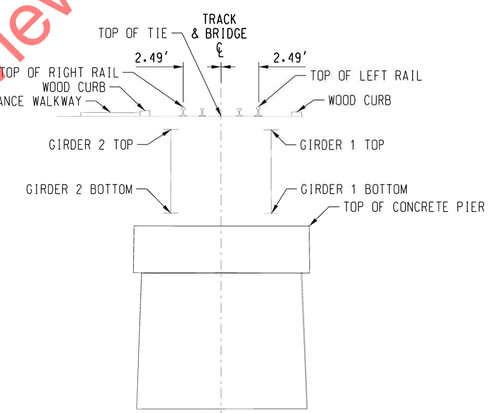

PIER 24
LOOKING RAILROAD EAST

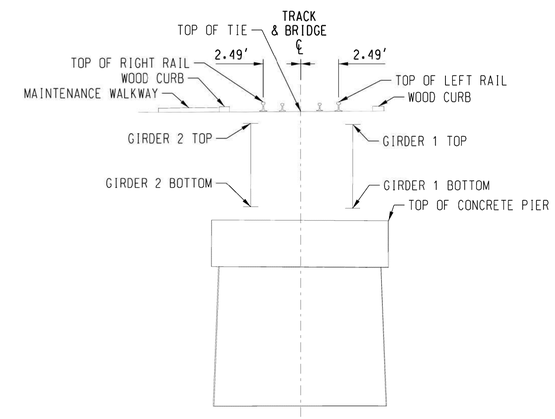

PIER 25
LOOKING RAILROAD EAST

TABLE OF ELEVATIONS

LOCATION	TOP LEFT RAIL	TOP OF TIE	TOP RIGHT RAIL
ELEVATION	2086.66'	2086.01'	2086.65'

TABLE OF GIRDER ELEVATIONS

LOCATION	TOP OF GIRDER	BOTTOM OF GIRDER
GIRDER 1 SPAN 21	2085.16'	2079.63'
GIRDER 2 SPAN 21	2085.15'	2079.65'
GIRDER 1 SPAN 22	2085.15'	2079.63'
GIRDER 2 SPAN 22	2085.15'	2079.64'

TABLE OF ELEVATIONS

LOCATION	TOP LEFT RAIL	TOP OF TIE	TOP RIGHT RAIL
ELEVATION	2086.65'	2085.99'	2086.62'

TABLE OF GIRDER ELEVATIONS

LOCATION	TOP OF GIRDER	BOTTOM OF GIRDER
GIRDER 1 SPAN 22	2085.16'	2079.63'
GIRDER 2 SPAN 22	2085.15'	2079.61'
GIRDER 1 SPAN 23	2085.16'	2079.62'
GIRDER 2 SPAN 23	2085.14'	2079.60'

TABLE OF ELEVATIONS

LOCATION	TOP LEFT RAIL	TOP OF TIE	TOP RIGHT RAIL
ELEVATION	2086.64'	2085.99'	2086.63'

TABLE OF GIRDER ELEVATIONS

LOCATION	TOP OF GIRDER	BOTTOM OF GIRDER
GIRDER 1 SPAN 23	2085.10'	2079.57'
GIRDER 2 SPAN 23	2085.13'	2079.59'
GIRDER 1 SPAN 24	2085.10'	2079.57'
GIRDER 2 SPAN 24	2085.13'	2079.59'

TABLE OF ELEVATIONS

LOCATION	TOP LEFT RAIL	TOP OF TIE	TOP RIGHT RAIL
ELEVATION	2086.63'	2085.97'	2086.60'

TABLE OF GIRDER ELEVATIONS

LOCATION	TOP OF GIRDER	BOTTOM OF GIRDER
GIRDER 1 SPAN 24	2085.19'	2079.64'
GIRDER 2 SPAN 24	2085.09'	2079.57'
GIRDER 1 SPAN 25	2085.20'	2079.64'
GIRDER 2 SPAN 25	2085.09'	2079.57'

DAVID EVANS AND ASSOCIATES INC.
908 N. HOWARD ST. SUITE 300
SPOKANE, WA 99201
Phone: 509.252.5900

811 Know what's below. Call before you dig.

NOTES:
1.) LEFT AND RIGHT DIRECTIONS ARE BASED ON A WEST ORIENTATION LOOKING UPSTATION OF RAILROAD ALONG CENTERLINE OF TRACK.

2.) STATIONING VALUES REFLECT ASSUMPTION THAT THE EAST ABUTMENT INSIDE FACE EQUALS 10+00 AT THE TRACK CENTERLINE.

SURVEYOR'S CERTIFICATION

THIS MAP CORRECTLY REPRESENTS A TOPOGRAPHIC SURVEY PERFORMED AUGUST 22-26, 2016, BY ME OR UNDER MY DIRECTION AT THE REQUEST OF ALAN K. BLOOMQUIST, MANAGER STRUCTURES DESIGN, BNSF RAILWAY.

PRELIMINARY

ALLISON K. YOUNGER, REGISTERED PROFESSIONAL LAND SURVEYOR IDAHO REGISTRATION NO. 12724

Preliminary Draft for Agency Review

DES:	
DRAWN:	KMD
CHECK:	DDHA/AKY
DATE:	SEPT. 2016
AUTH:	
LINE SEG:	0045

BNSF RAILWAY
BRIDGE ENGINEERING KANSAS CITY, KS

APPROVED:
ASST. DIRECTOR STRUCTURES DESIGN

SANDPOINT JCT, ID TO EAST ALGOMA, ID
BRIDGE NO. 003.90
OVER LAKE PEND OREILLE NEAR SANDPOINT, ID
PIER PLAN & PROFILES

PLAN NO: 0045-003.900-007 SHEET: 7 OF 24

File Location: J:\BNSF\0000119\ACAD\DWG\SHEETS\Sandpoint Br Edge\0045-003.900-007.DGN

Date Printed: 9/30/2016 Time Printed: 4:55:02 PM

USCG0010933/27

PIER PLAN & PROFILES

EAST
TO SANDPOINT JCT, ID

WEST
TO EAST ALGOMA, ID

N

0 5 10
SCALE IN FEET
HORIZONTAL SCALE: 1" = 5'

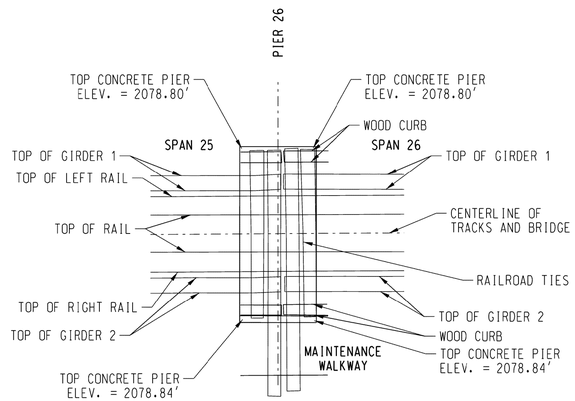

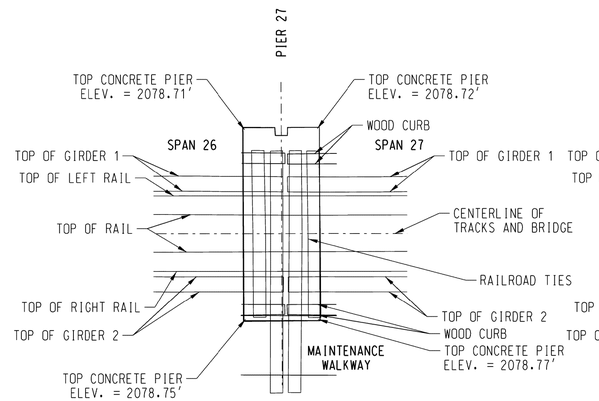

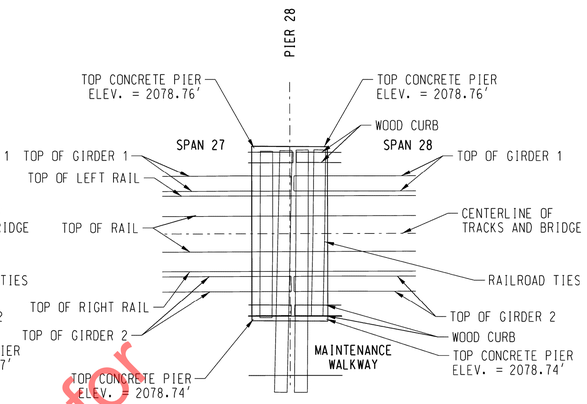

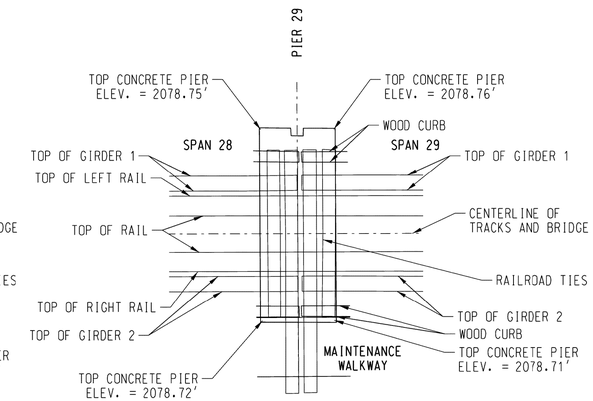

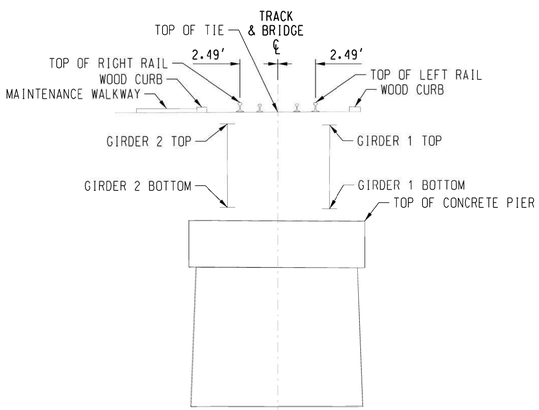

PIER 26
LOOKING RAILROAD EAST

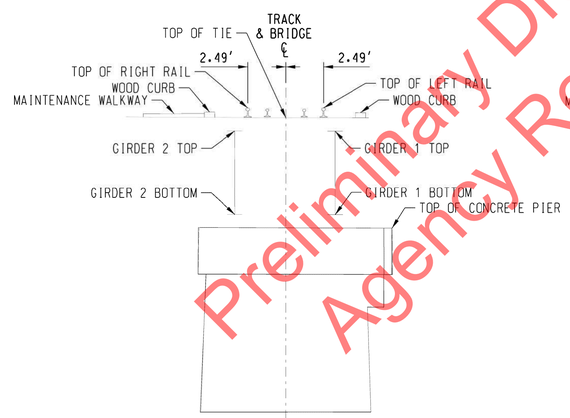

PIER 27
LOOKING RAILROAD EAST

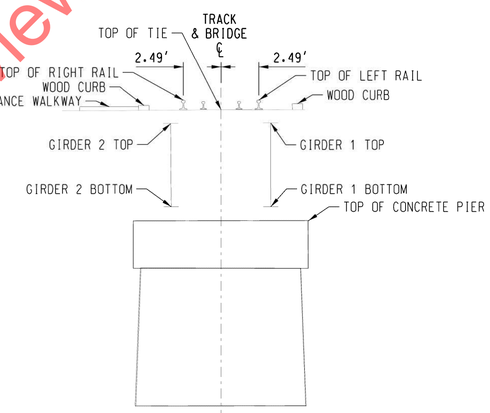

PIER 28
LOOKING RAILROAD EAST

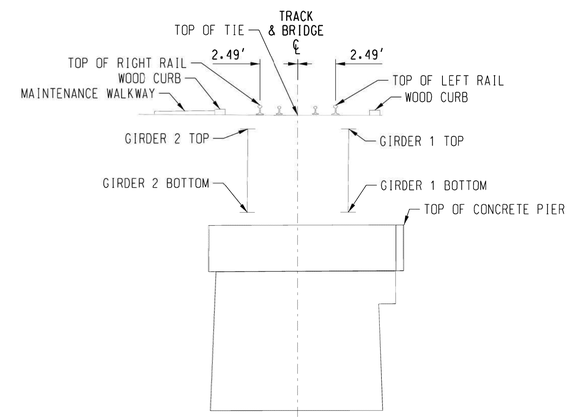

PIER 29
LOOKING RAILROAD EAST

TABLE OF ELEVATIONS			
LOCATION	TOP LEFT RAIL	TOP OF TIE	TOP RIGHT RAIL
ELEVATION	2086.65'	2086.00'	2086.65'

TABLE OF GIRDER ELEVATIONS		
LOCATION	TOP OF GIRDER	BOTTOM OF GIRDER
GIRDER 1 SPAN 25	2085.16'	2079.63'
GIRDER 2 SPAN 25	2085.24'	2079.71'
GIRDER 1 SPAN 26	2085.16'	2079.61'
GIRDER 2 SPAN 26	2085.24'	2079.71'

TABLE OF ELEVATIONS			
LOCATION	TOP LEFT RAIL	TOP OF TIE	TOP RIGHT RAIL
ELEVATION	2086.67'	2086.01'	2086.66'

TABLE OF GIRDER ELEVATIONS		
LOCATION	TOP OF GIRDER	BOTTOM OF GIRDER
GIRDER 1 SPAN 26	2085.13'	2079.60'
GIRDER 2 SPAN 26	2085.14'	2079.62'
GIRDER 1 SPAN 27	2085.13'	2079.61'
GIRDER 2 SPAN 27	2085.14'	2079.62'

TABLE OF ELEVATIONS			
LOCATION	TOP LEFT RAIL	TOP OF TIE	TOP RIGHT RAIL
ELEVATION	2086.74'	2086.11'	2086.72'

TABLE OF GIRDER ELEVATIONS		
LOCATION	TOP OF GIRDER	BOTTOM OF GIRDER
GIRDER 1 SPAN 27	2085.21'	2079.67'
GIRDER 2 SPAN 27	2085.18'	2079.67'
GIRDER 1 SPAN 28	2085.21'	2079.67'
GIRDER 2 SPAN 28	2085.18'	2079.67'

TABLE OF ELEVATIONS			
LOCATION	TOP LEFT RAIL	TOP OF TIE	TOP RIGHT RAIL
ELEVATION	2086.65'	2086.02'	2086.66'

TABLE OF GIRDER ELEVATIONS		
LOCATION	TOP OF GIRDER	BOTTOM OF GIRDER
GIRDER 1 SPAN 28	2085.10'	2079.58'
GIRDER 2 SPAN 28	2085.09'	2079.57'
GIRDER 1 SPAN 29	2085.10'	2079.58'
GIRDER 2 SPAN 29	2085.09'	2079.57'

Preliminary Draft for Agency Review

NOTES:
1.) LEFT AND RIGHT DIRECTIONS ARE BASED ON A WEST ORIENTATION LOOKING UPSTATION OF RAILROAD ALONG CENTERLINE OF TRACK.

2.) STATIONING VALUES REFLECT ASSUMPTION THAT THE EAST ABUTMENT INSIDE FACE EQUALS 10+00 AT THE TRACK CENTERLINE.

SURVEYOR'S CERTIFICATION

THIS MAP CORRECTLY REPRESENTS A TOPOGRAPHIC SURVEY PERFORMED AUGUST 22-26, 2016, BY ME OR UNDER MY DIRECTION AT THE REQUEST OF ALAN K. BLOOMQUIST, MANAGER STRUCTURES DESIGN, BNSF RAILWAY.

PRELIMINARY

ALLISON K. YOUNGER, REGISTERED PROFESSIONAL LAND SURVEYOR IDAHO REGISTRATION NO. 12724

DAVID EVANS AND ASSOCIATES INC.
908 N. HOWARD ST. SUITE 300
SPOKANE, WA 99201
Phone: 509.252.5900

811 Know what's below. Call before you dig.

DES:	
DRAWN:	KMD
CHECK:	DDHA/AKY
DATE:	SEPT. 2016
AUTH:	
LINE SEG:	0045

BNSF RAILWAY
BRIDGE ENGINEERING KANSAS CITY, KS

APPROVED:
ASST. DIRECTOR STRUCTURES DESIGN

SANDPOINT JCT, ID TO EAST ALGOMA, ID
BRIDGE NO. 003.90
OVER LAKE PEND OREILLE NEAR SANDPOINT, ID
PIER PLAN & PROFILES

PLAN NO: 0045-003.900-008 SHEET: 8 OF 24

File Location: J:\BNSF\0000119\ACAD\DWG\SHEETS\Sandpoint Br Edge\0045-003.900-008.DGN
Date Printed: 9/30/2016 Time Printed: 4:55:34 PM

USCG0010943/27

PIER PLAN & PROFILES

EAST
TO SANDPOINT JCT, ID

WEST
TO EAST ALGOMA, ID

N

0 5 10
SCALE IN FEET
HORIZONTAL SCALE: 1" = 5'

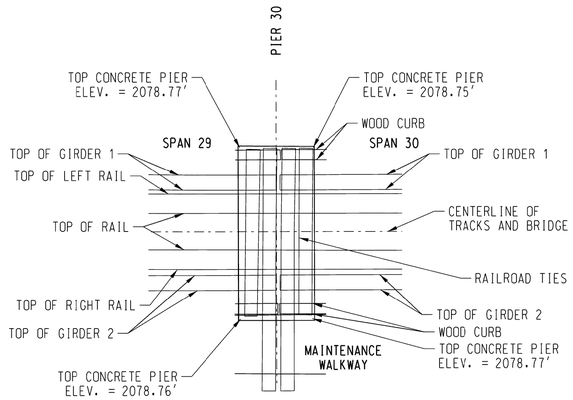

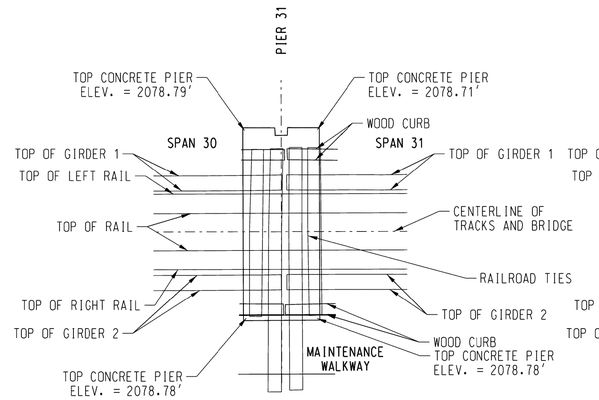

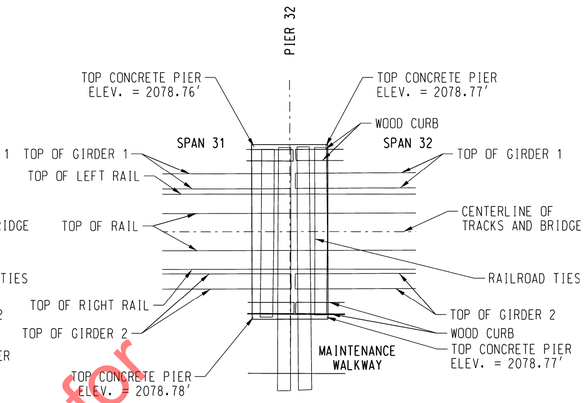

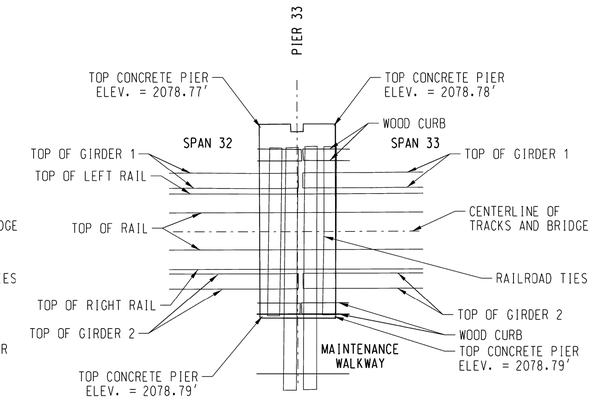

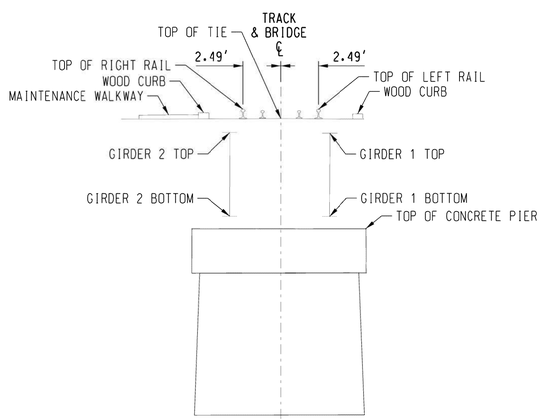

PIER 30
LOOKING RAILROAD EAST

TABLE OF ELEVATIONS			
LOCATION	TOP LEFT RAIL	TOP OF TIE	TOP RIGHT RAIL
ELEVATION	2086.67'	2086.05'	2086.67'

TABLE OF GIRDER ELEVATIONS		
LOCATION	TOP OF GIRDER	BOTTOM OF GIRDER
GIRDER 1 SPAN 29	2085.08'	2079.57'
GIRDER 2 SPAN 29	2085.11'	2079.59'
GIRDER 1 SPAN 30	2085.08'	2079.57'
GIRDER 2 SPAN 30	2085.12'	2079.59'

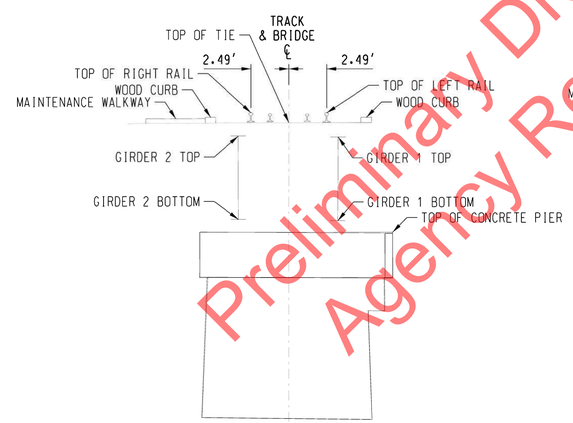

PIER 31
LOOKING RAILROAD EAST

TABLE OF ELEVATIONS			
LOCATION	TOP LEFT RAIL	TOP OF TIE	TOP RIGHT RAIL
ELEVATION	2086.67'	2086.03'	2086.68'

TABLE OF GIRDER ELEVATIONS		
LOCATION	TOP OF GIRDER	BOTTOM OF GIRDER
GIRDER 1 SPAN 30	2085.07'	2079.54'
GIRDER 2 SPAN 30	2085.13'	2079.63'
GIRDER 1 SPAN 31	2085.08'	2079.54'
GIRDER 2 SPAN 31	2085.14'	2079.63'

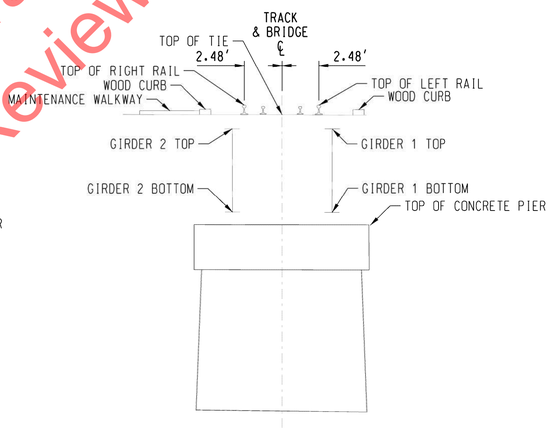

PIER 32
LOOKING RAILROAD EAST

TABLE OF ELEVATIONS			
LOCATION	TOP LEFT RAIL	TOP OF TIE	TOP RIGHT RAIL
ELEVATION	2086.68'	2086.04'	2086.68'

TABLE OF GIRDER ELEVATIONS		
LOCATION	TOP OF GIRDER	BOTTOM OF GIRDER
GIRDER 1 SPAN 31	2085.10'	2079.58'
GIRDER 2 SPAN 31	2085.13'	2079.60'
GIRDER 1 SPAN 32	2085.11'	2079.58'
GIRDER 2 SPAN 32	2085.13'	2079.60'

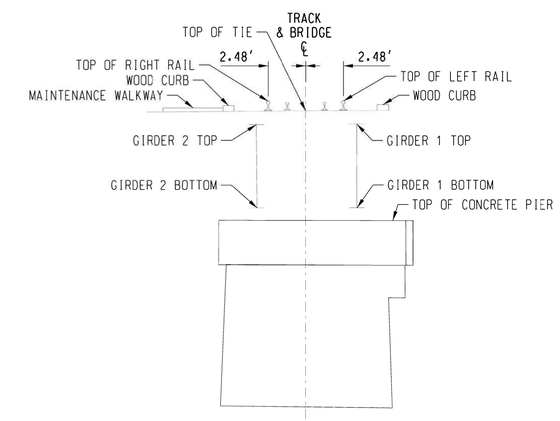

PIER 33
LOOKING RAILROAD EAST

TABLE OF ELEVATIONS			
LOCATION	TOP LEFT RAIL	TOP OF TIE	TOP RIGHT RAIL
ELEVATION	2086.69'	2086.03'	2086.66'

TABLE OF GIRDER ELEVATIONS		
LOCATION	TOP OF GIRDER	BOTTOM OF GIRDER
GIRDER 1 SPAN 32	2085.16'	2079.62'
GIRDER 2 SPAN 32	2085.12'	2079.61'
GIRDER 1 SPAN 33	2085.16'	2079.62'
GIRDER 2 SPAN 33	2085.12'	2079.61'

Preliminary Draft for Agency Review

NOTES:
1.) LEFT AND RIGHT DIRECTIONS ARE BASED ON A WEST ORIENTATION LOOKING UPSTATION OF RAILROAD ALONG CENTERLINE OF TRACK.

2.) STATIONING VALUES REFLECT ASSUMPTION THAT THE EAST ABUTMENT INSIDE FACE EQUALS 10+00 AT THE TRACK CENTERLINE.

SURVEYOR'S CERTIFICATION

THIS MAP CORRECTLY REPRESENTS A TOPOGRAPHIC SURVEY PERFORMED AUGUST 22-26, 2016, BY ME OR UNDER MY DIRECTION AT THE REQUEST OF ALAN K. BLOOMQUIST, MANAGER STRUCTURES DESIGN, BNSF RAILWAY.

PRELIMINARY

ALLISON K. YOUNGER, REGISTERED PROFESSIONAL LAND SURVEYOR IDAHO REGISTRATION NO. 12724

DAVID EVANS AND ASSOCIATES INC.
908 N. HOWARD ST. SUITE 300
SPOKANE, WA 99201
Phone: 509.252.5900

811 Know what's below. Call before you dig.

DES:	
DRAWN:	KMD
CHECK:	DDHA/AKY
DATE:	SEPT. 2016
AUTH:	
LINE SEG:	0045

BNSF RAILWAY
BRIDGE ENGINEERING KANSAS CITY, KS
APPROVED:
ASST. DIRECTOR STRUCTURES DESIGN

SANDPOINT JCT, ID TO EAST ALGOMA, ID
BRIDGE NO. 003.90
OVER LAKE PEND OREILLE NEAR SANDPOINT, ID
PIER PLAN & PROFILES

PLAN NO: 0045-003.900-009 SHEET: 9 OF 24

File Location: F:\#BNSF\00001\#\40CAD\#\#SHEETS\#Sandpoint Bridge\#045-003.900-009.DGN
Date Printed: 9/30/2016 Time Printed: 4:56:05 PM

USCG0010953/27

PIER PLAN & PROFILES

EAST
TO SANDPOINT JCT, ID

WEST
TO EAST ALGOMA, ID

N

0 5 10
SCALE IN FEET
HORIZONTAL SCALE: 1" = 5'

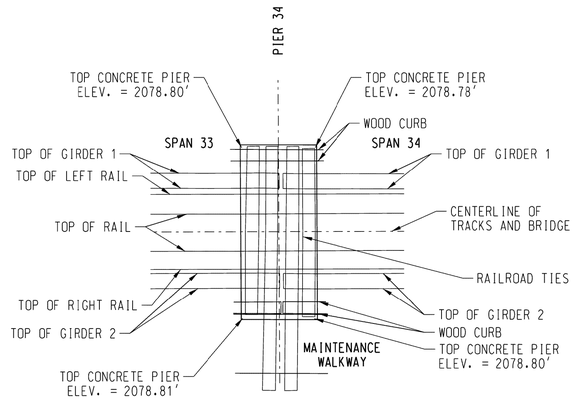

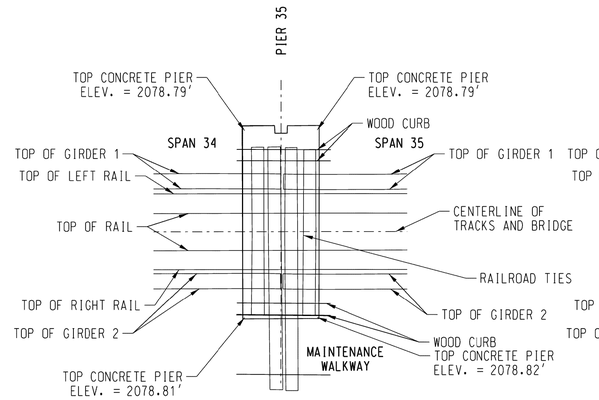

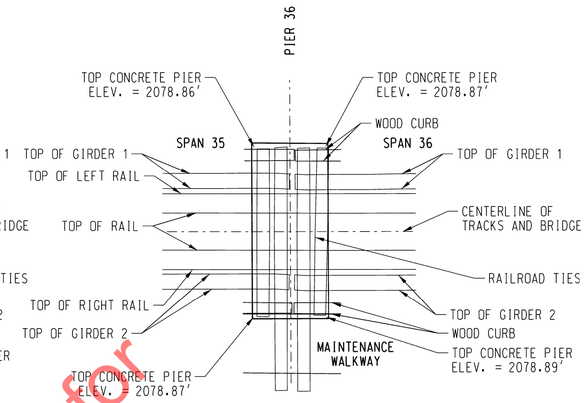

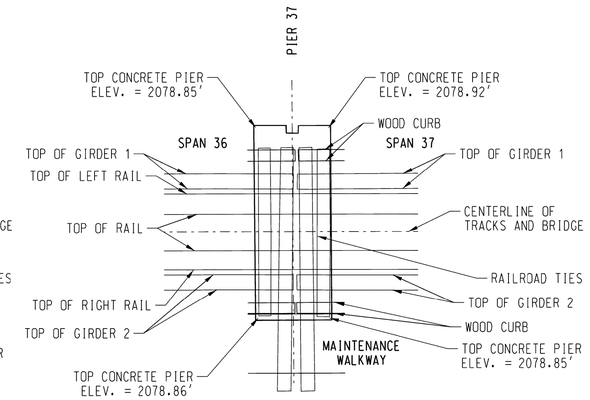

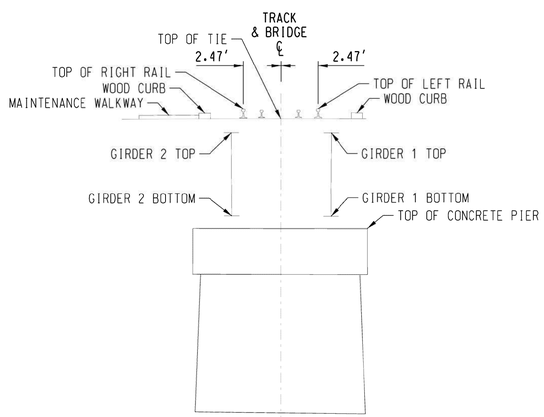

PIER 34
LOOKING RAILROAD EAST

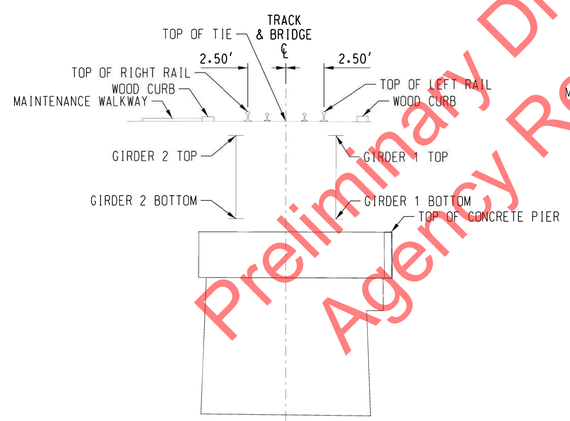

PIER 35
LOOKING RAILROAD EAST

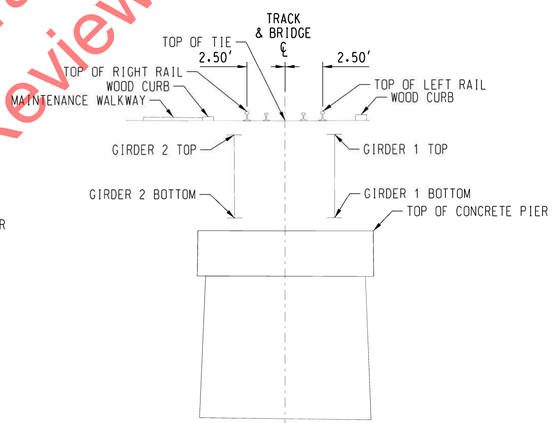

PIER 36
LOOKING RAILROAD EAST

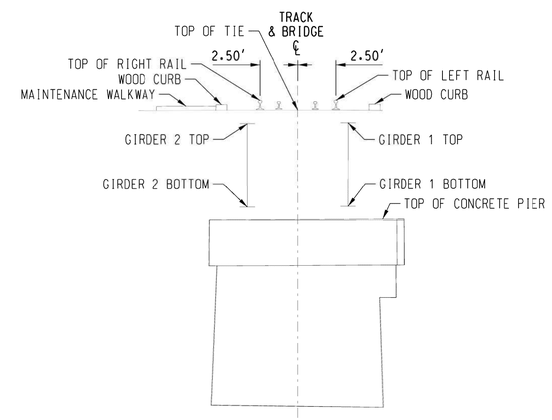

PIER 37
LOOKING RAILROAD EAST

TABLE OF ELEVATIONS			
LOCATION	TOP LEFT RAIL	TOP OF TIE	TOP RIGHT RAIL
ELEVATION	2086.71'	2086.06'	2086.71'

TABLE OF GIRDER ELEVATIONS		
LOCATION	TOP OF GIRDER	BOTTOM OF GIRDER
GIRDER 1 SPAN 33	2085.13'	2079.60'
GIRDER 2 SPAN 33	2085.15'	2079.63'
GIRDER 1 SPAN 34	2085.13'	2079.61'
GIRDER 2 SPAN 34	2085.14'	2079.63'

TABLE OF ELEVATIONS			
LOCATION	TOP LEFT RAIL	TOP OF TIE	TOP RIGHT RAIL
ELEVATION	2086.75'	2086.11'	2086.74'

TABLE OF GIRDER ELEVATIONS		
LOCATION	TOP OF GIRDER	BOTTOM OF GIRDER
GIRDER 1 SPAN 34	2085.18'	2079.65'
GIRDER 2 SPAN 34	2085.18'	2079.68'
GIRDER 1 SPAN 35	2085.18'	2079.65'
GIRDER 2 SPAN 35	2085.18'	2079.67'

TABLE OF ELEVATIONS			
LOCATION	TOP LEFT RAIL	TOP OF TIE	TOP RIGHT RAIL
ELEVATION	2086.78'	2086.15'	2086.75'

TABLE OF GIRDER ELEVATIONS		
LOCATION	TOP OF GIRDER	BOTTOM OF GIRDER
GIRDER 1 SPAN 35	2085.26'	2079.74'
GIRDER 2 SPAN 35	2085.23'	2079.72'
GIRDER 1 SPAN 36	2085.26'	2079.74'
GIRDER 2 SPAN 36	2085.22'	2079.71'

TABLE OF ELEVATIONS			
LOCATION	TOP LEFT RAIL	TOP OF TIE	TOP RIGHT RAIL
ELEVATION	2086.76'	2086.11'	2086.76'

TABLE OF GIRDER ELEVATIONS		
LOCATION	TOP OF GIRDER	BOTTOM OF GIRDER
GIRDER 1 SPAN 36	2085.27'	2079.75'
GIRDER 2 SPAN 36	2085.22'	2079.71'
GIRDER 1 SPAN 37	2085.28'	2079.76'
GIRDER 2 SPAN 37	2085.22'	2079.71'

Preliminary Draft for Agency Review

NOTES:
1.) LEFT AND RIGHT DIRECTIONS ARE BASED ON A WEST ORIENTATION LOOKING UPSTATION OF RAILROAD ALONG CENTERLINE OF TRACK.

2.) STATIONING VALUES REFLECT ASSUMPTION THAT THE EAST ABUTMENT INSIDE FACE EQUALS 10+00 AT THE TRACK CENTERLINE.

SURVEYOR'S CERTIFICATION

THIS MAP CORRECTLY REPRESENTS A TOPOGRAPHIC SURVEY PERFORMED AUGUST 22-26, 2016, BY ME OR UNDER MY DIRECTION AT THE REQUEST OF ALAN K. BLOOMQUIST, MANAGER STRUCTURES DESIGN, BNSF RAILWAY.

PRELIMINARY

ALLISON K. YOUNGER, REGISTERED PROFESSIONAL LAND SURVEYOR IDAHO REGISTRATION NO. 12724

DAVID EVANS AND ASSOCIATES INC.
908 N. HOWARD ST. SUITE 300
SPOKANE, WA 99201
Phone: 509.252.5900

811 Know what's below. Call before you dig.

DES:	
DRAWN:	KMD
CHECK:	DDHA/AKY
DATE:	SEPT. 2016
AUTH:	
LINE SEG:	0045

BNSF RAILWAY
BRIDGE ENGINEERING KANSAS CITY, KS

APPROVED: _____
ASST. DIRECTOR STRUCTURES DESIGN

SANDPOINT JCT, ID TO EAST ALGOMA, ID
BRIDGE NO. 003.90
OVER LAKE PEND OREILLE NEAR SANDPOINT, ID
PIER PLAN & PROFILES

PLAN NO: 0045-003.900-010 SHEET: 10 OF 24

File Location: F:\#BNSF0000011\#0400CAD\#SHEETS\#Sandpoint Bridge\#0045-003.900-010.DGN

Date Printed: 9/30/2016 Time Printed: 4:56:37 PM

USCG0010963/27

PIER PLAN & PROFILES

EAST
TO SANDPOINT JCT, ID

WEST
TO EAST ALGOMA, ID

N

0 5 10
SCALE IN FEET
HORIZONTAL SCALE: 1" = 5'

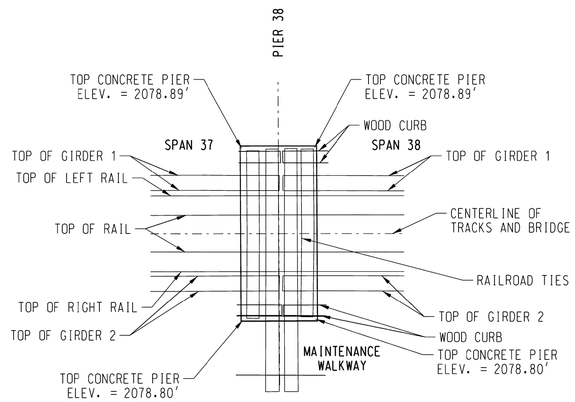

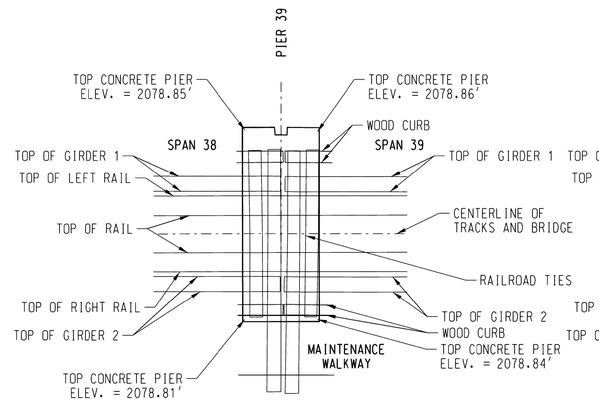

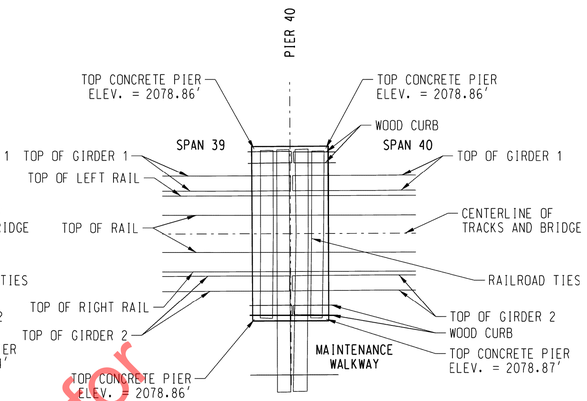

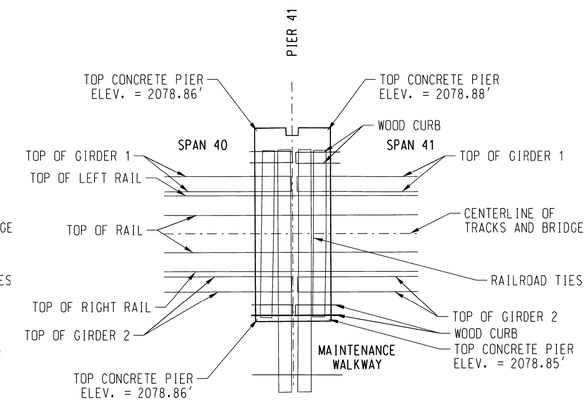

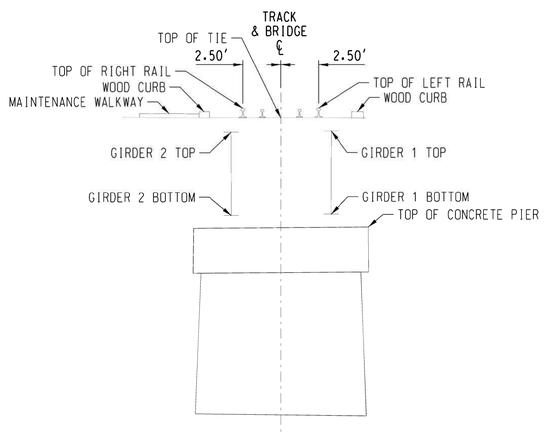

PIER 38
LOOKING RAILROAD EAST

TABLE OF ELEVATIONS			
LOCATION	TOP LEFT RAIL	TOP OF TIE	TOP RIGHT RAIL
ELEVATION	2086.76'	2086.11'	2086.75'

TABLE OF GIRDER ELEVATIONS		
LOCATION	TOP OF GIRDER	BOTTOM OF GIRDER
GIRDER 1 SPAN 37	2085.25'	2079.73'
GIRDER 2 SPAN 37	2085.17'	2079.65'
GIRDER 1 SPAN 38	2085.25'	2079.74'
GIRDER 2 SPAN 38	2085.16'	2079.65'

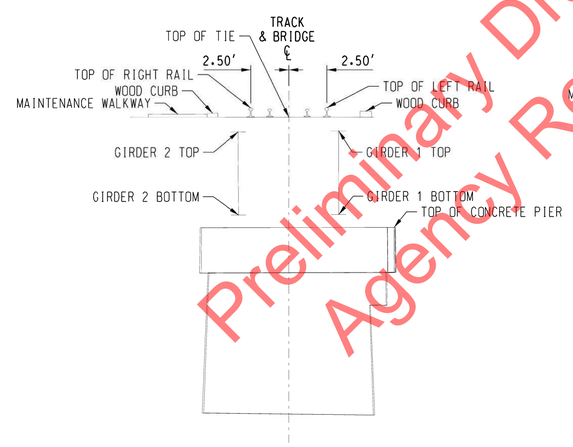

PIER 39
LOOKING RAILROAD EAST

TABLE OF ELEVATIONS			
LOCATION	TOP LEFT RAIL	TOP OF TIE	TOP RIGHT RAIL
ELEVATION	2086.76'	2086.14'	2086.74'

TABLE OF GIRDER ELEVATIONS		
LOCATION	TOP OF GIRDER	BOTTOM OF GIRDER
GIRDER 1 SPAN 38	2085.23'	2079.70'
GIRDER 2 SPAN 38	2085.18'	2079.67'
GIRDER 1 SPAN 39	2085.24'	2079.70'
GIRDER 2 SPAN 39	2085.17'	2079.66'

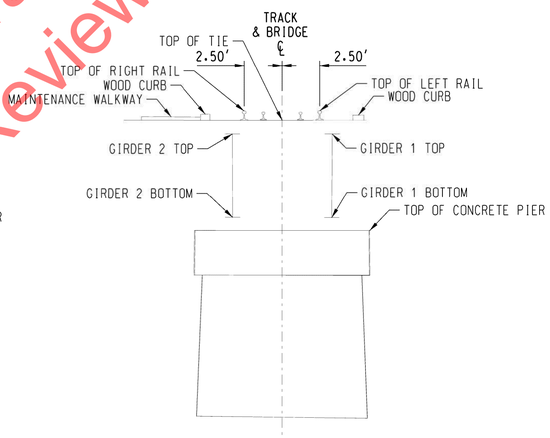

PIER 40
LOOKING RAILROAD EAST

TABLE OF ELEVATIONS			
LOCATION	TOP LEFT RAIL	TOP OF TIE	TOP RIGHT RAIL
ELEVATION	2086.78'	2085.15'	2086.76'

TABLE OF GIRDER ELEVATIONS		
LOCATION	TOP OF GIRDER	BOTTOM OF GIRDER
GIRDER 1 SPAN 39	2085.25'	2079.71'
GIRDER 2 SPAN 39	2085.25'	2079.74'
GIRDER 1 SPAN 40	2085.25'	2079.72'
GIRDER 2 SPAN 40	2085.25'	2079.73'

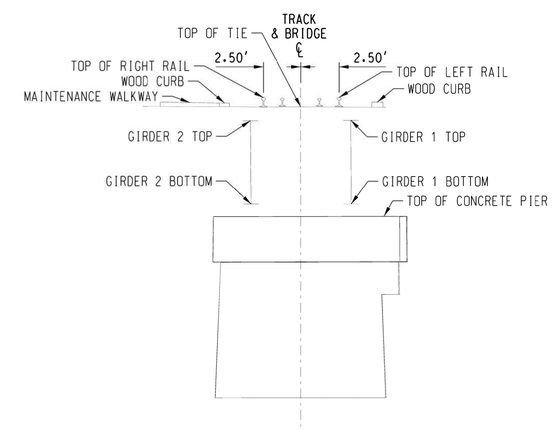

PIER 41
LOOKING RAILROAD EAST

TABLE OF ELEVATIONS			
LOCATION	TOP LEFT RAIL	TOP OF TIE	TOP RIGHT RAIL
ELEVATION	2086.73'	2086.11'	2086.72'

TABLE OF GIRDER ELEVATIONS		
LOCATION	TOP OF GIRDER	BOTTOM OF GIRDER
GIRDER 1 SPAN 40	2085.22'	2079.71'
GIRDER 2 SPAN 40	2085.22'	2079.71'
GIRDER 1 SPAN 41	2085.23'	2079.68'
GIRDER 2 SPAN 41	2085.20'	2079.68'

Preliminary Draft for Agency Review

NOTES:
1.) LEFT AND RIGHT DIRECTIONS ARE BASED ON A WEST ORIENTATION LOOKING UPSTATION OF RAILROAD ALONG CENTERLINE OF TRACK.

2.) STATIONING VALUES REFLECT ASSUMPTION THAT THE EAST ABUTMENT INSIDE FACE EQUALS 10+00 AT THE TRACK CENTERLINE.

SURVEYOR'S CERTIFICATION

THIS MAP CORRECTLY REPRESENTS A TOPOGRAPHIC SURVEY PERFORMED AUGUST 22-26, 2016, BY ME OR UNDER MY DIRECTION AT THE REQUEST OF ALAN K. BLOOMQUIST, MANAGER STRUCTURES DESIGN, BNSF RAILWAY.

PRELIMINARY

ALLISON K. YOUNGER, REGISTERED PROFESSIONAL LAND SURVEYOR IDAHO REGISTRATION NO. 12724

DAVID EVANS AND ASSOCIATES INC.
908 N. HOWARD ST. SUITE 300
SPOKANE, WA 99201
Phone: 509.252.5900

811 Know what's below. Call before you dig.

DES:	
DRAWN: KMD	
CHECK: DDHA/AKY	
DATE: SEPT. 2016	
AUTH:	
LINE SEG: 0045	

BNSF RAILWAY
BRIDGE ENGINEERING KANSAS CITY, KS
APPROVED:
ASST. DIRECTOR STRUCTURES DESIGN

SANDPOINT JCT, ID TO EAST ALGOMA, ID
BRIDGE NO. 003.90
OVER LAKE PEND OREILLE NEAR SANDPOINT, ID
PIER PLAN & PROFILES

PLAN NO: 0045-003.900-011 SHEET: 11 OF 24

File Location: J:\BNSFDOD0119\4000\AD\SWSHEETS\Sandpoint Br\dgn\0045-003.900-011.DGN
Date Printed: 9/30/2016 Time Printed: 4:57:08 PM

USCG0010973/27

PIER PLAN & PROFILES

EAST
TO SANDPOINT JCT, ID

WEST
TO EAST ALGOMA, ID

N

0 5 10
SCALE IN FEET
HORIZONTAL SCALE: 1" = 5'

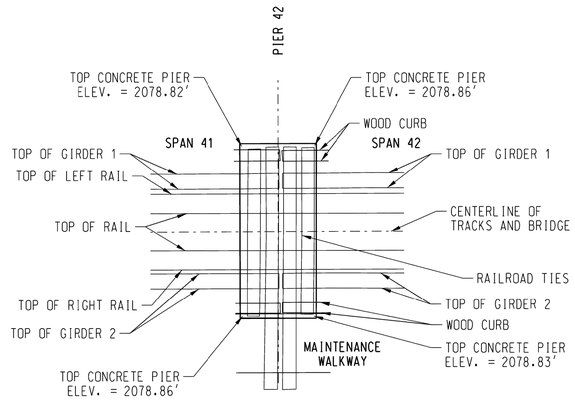

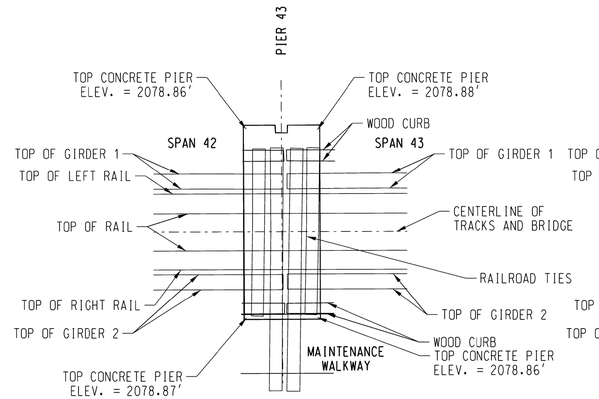

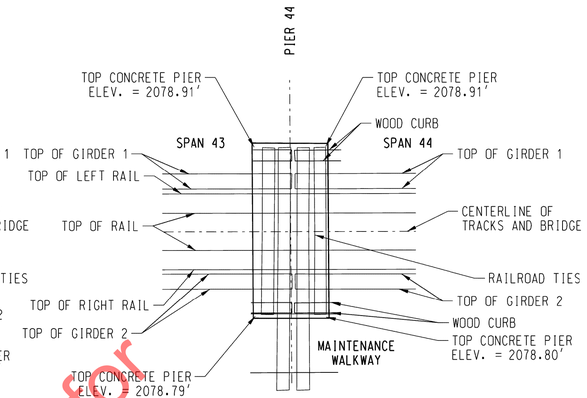

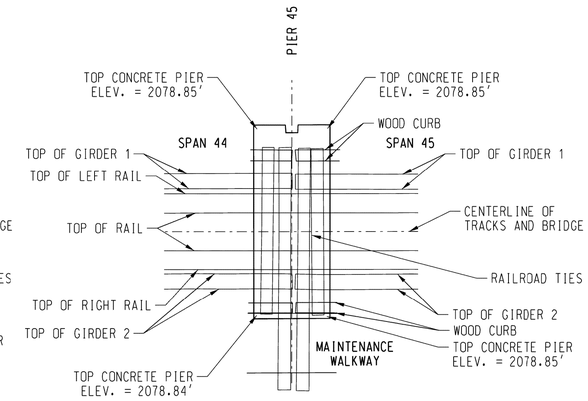

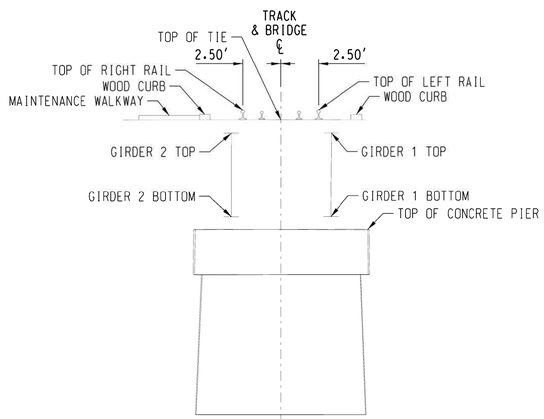

PIER 42
LOOKING RAILROAD EAST

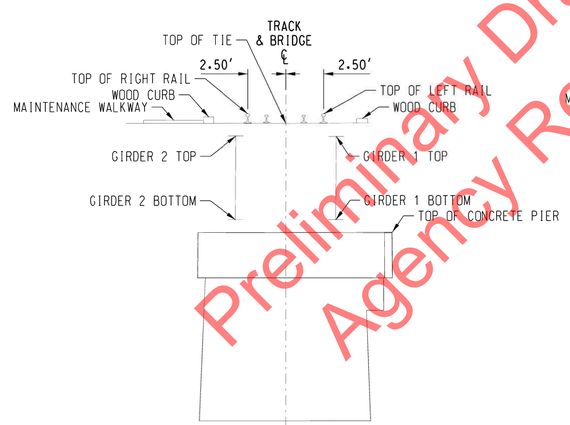

PIER 43
LOOKING RAILROAD EAST

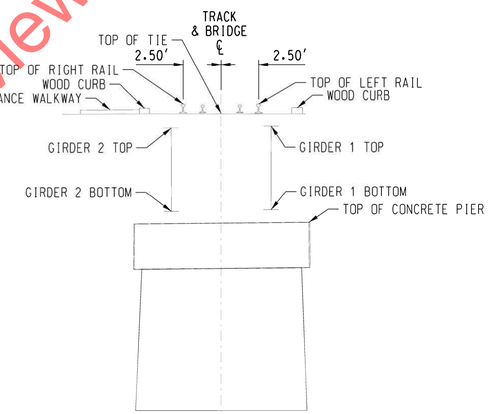

PIER 44
LOOKING RAILROAD EAST

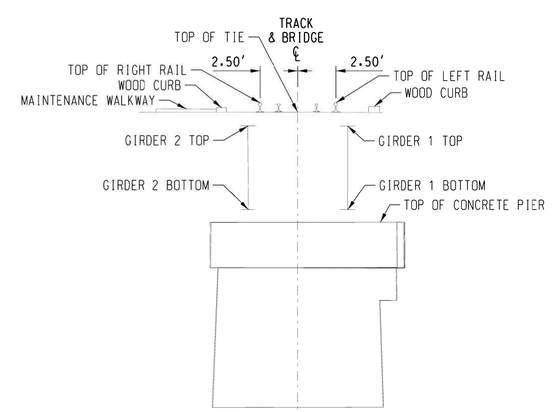

PIER 45
LOOKING RAILROAD EAST

TABLE OF ELEVATIONS			
LOCATION	TOP LEFT RAIL	TOP OF TIE	TOP RIGHT RAIL
ELEVATION	2086.74'	2086.10'	2086.73'

TABLE OF GIRDER ELEVATIONS		
LOCATION	TOP OF GIRDER	BOTTOM OF GIRDER
GIRDER 1 SPAN 41	2085.23'	2079.69'
GIRDER 2 SPAN 41	2085.21'	2079.68'
GIRDER 1 SPAN 42	2085.23'	2079.69'
GIRDER 2 SPAN 42	2085.21'	2079.68'

TABLE OF ELEVATIONS			
LOCATION	TOP LEFT RAIL	TOP OF TIE	TOP RIGHT RAIL
ELEVATION	2086.72'	2086.08'	2086.72'

TABLE OF GIRDER ELEVATIONS		
LOCATION	TOP OF GIRDER	BOTTOM OF GIRDER
GIRDER 1 SPAN 42	2085.25'	2079.72'
GIRDER 2 SPAN 42	2085.21'	2079.68'
GIRDER 1 SPAN 43	2085.23'	2079.71'
GIRDER 2 SPAN 43	2085.25'	2079.71'

TABLE OF ELEVATIONS			
LOCATION	TOP LEFT RAIL	TOP OF TIE	TOP RIGHT RAIL
ELEVATION	2086.73'	2086.10'	2086.73'

TABLE OF GIRDER ELEVATIONS		
LOCATION	TOP OF GIRDER	BOTTOM OF GIRDER
GIRDER 1 SPAN 43	2085.27'	2079.74'
GIRDER 2 SPAN 43	2085.15'	2079.63'
GIRDER 1 SPAN 44	2085.27'	2079.74'
GIRDER 2 SPAN 44	2085.15'	2079.63'

TABLE OF ELEVATIONS			
LOCATION	TOP LEFT RAIL	TOP OF TIE	TOP RIGHT RAIL
ELEVATION	2086.75'	2086.14'	2086.73'

TABLE OF GIRDER ELEVATIONS		
LOCATION	TOP OF GIRDER	BOTTOM OF GIRDER
GIRDER 1 SPAN 44	2085.21'	2079.70'
GIRDER 2 SPAN 44	2085.23'	2079.69'
GIRDER 1 SPAN 45	2085.21'	2079.68'
GIRDER 2 SPAN 45	2085.22'	2079.68'

Preliminary Draft for Agency Review

NOTES:
1.) LEFT AND RIGHT DIRECTIONS ARE BASED ON A WEST ORIENTATION LOOKING UPSTATION OF RAILROAD ALONG CENTERLINE OF TRACK.

2.) STATIONING VALUES REFLECT ASSUMPTION THAT THE EAST ABUTMENT INSIDE FACE EQUALS 10+00 AT THE TRACK CENTERLINE.

SURVEYOR'S CERTIFICATION

THIS MAP CORRECTLY REPRESENTS A TOPOGRAPHIC SURVEY PERFORMED AUGUST 22-26, 2016, BY ME OR UNDER MY DIRECTION AT THE REQUEST OF ALAN K. BLOOMQUIST, MANAGER STRUCTURES DESIGN, BNSF RAILWAY.

PRELIMINARY

ALLISON K. YOUNGER, REGISTERED PROFESSIONAL LAND SURVEYOR IDAHO REGISTRATION NO. 12724

DAVID EVANS AND ASSOCIATES INC.
908 N. HOWARD ST. SUITE 300
SPOKANE, WA 99201
Phone: 509.252.5900

811 Know what's below. Call before you dig.

DES:	
DRAWN:	KMD
CHECK:	DDHA/AKY
DATE:	SEPT. 2016
AUTH:	
LINE SEG:	0045

BNSF RAILWAY
BRIDGE ENGINEERING KANSAS CITY, KS

APPROVED:
ASST. DIRECTOR STRUCTURES DESIGN

SANDPOINT JCT, ID TO EAST ALGOMA, ID
BRIDGE NO. 003.90
OVER LAKE PEND OREILLE NEAR SANDPOINT, ID
PIER PLAN & PROFILES

PLAN NO: 0045-003.900-012 SHEET: 12 OF 24

File Location: J:\BNSF\0000119\400\AD\WORKSHEETS\Sandpoint Br Edge\0045-003.900-012.DGN

Date Printed: 9/30/2016 Time Printed: 4:57:39 PM

USCG0010983/27

PIER PLAN & PROFILES

EAST
TO SANDPOINT JCT, ID

WEST
TO EAST ALGOMA, ID

N

0 5 10
SCALE IN FEET
HORIZONTAL SCALE: 1" = 5'

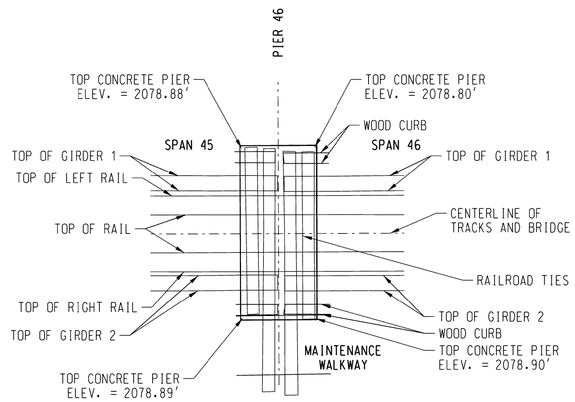

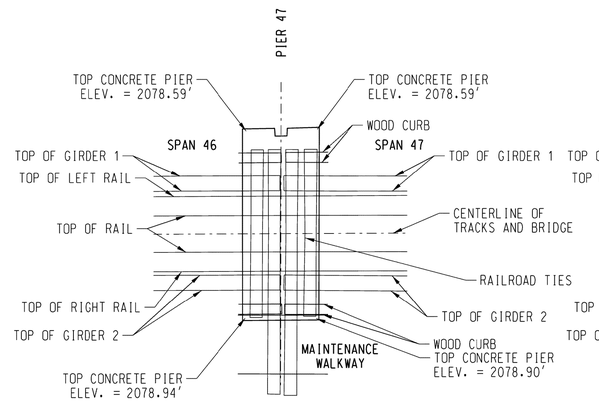

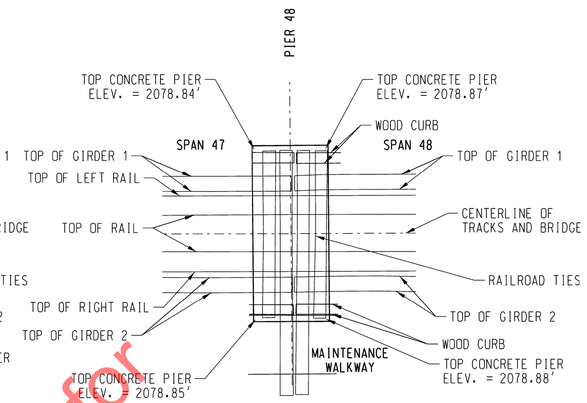

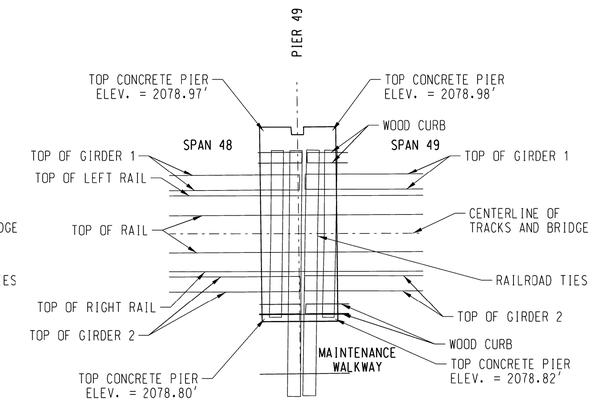

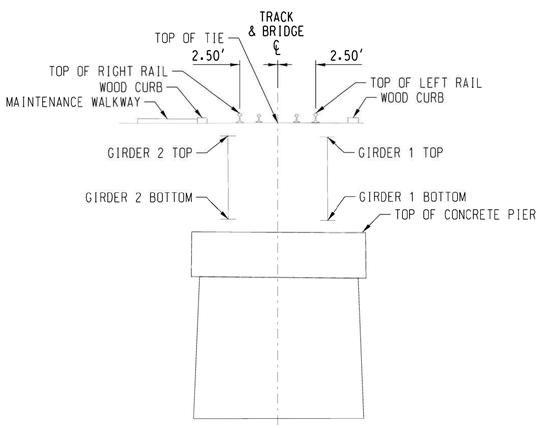

PIER 46
LOOKING RAILROAD EAST

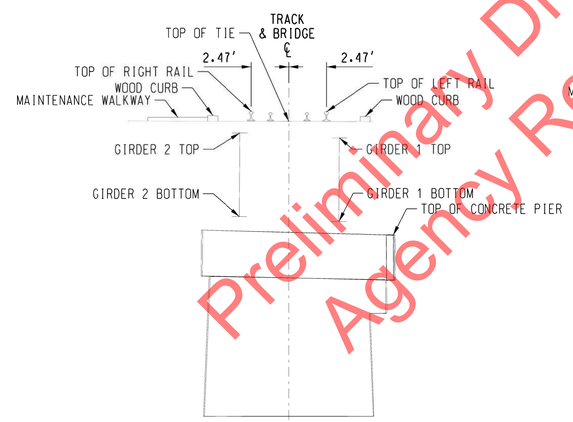

PIER 47
LOOKING RAILROAD EAST

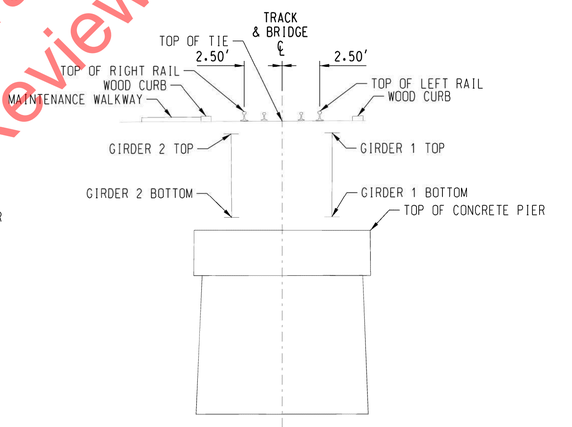

PIER 48
LOOKING RAILROAD EAST

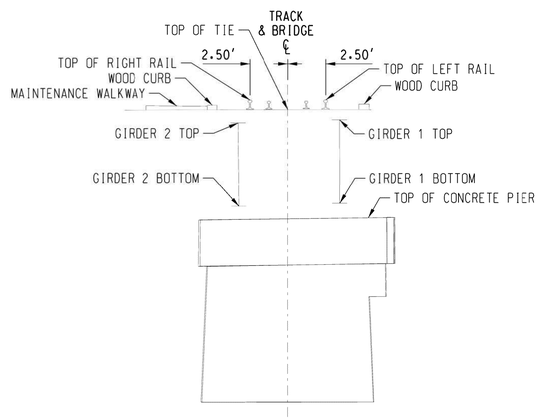

PIER 49
LOOKING RAILROAD EAST

TABLE OF ELEVATIONS			
LOCATION	TOP LEFT RAIL	TOP OF TIE	TOP RIGHT RAIL
ELEVATION	2086.73'	2086.09'	2086.73'

TABLE OF GIRDER ELEVATIONS		
LOCATION	TOP OF GIRDER	BOTTOM OF GIRDER
GIRDER 1 SPAN 45	2085.15'	2079.63'
GIRDER 2 SPAN 45	2085.24'	2079.73'
GIRDER 1 SPAN 46	2085.16'	2079.64'
GIRDER 2 SPAN 46	2085.25'	2079.72'

TABLE OF ELEVATIONS			
LOCATION	TOP LEFT RAIL	TOP OF TIE	TOP RIGHT RAIL
ELEVATION	2086.74'	2086.10'	2086.77'

TABLE OF GIRDER ELEVATIONS		
LOCATION	TOP OF GIRDER	BOTTOM OF GIRDER
GIRDER 1 SPAN 46	2085.02'	2079.48'
GIRDER 2 SPAN 46	2085.33'	2079.80'
GIRDER 1 SPAN 47	2085.02'	2079.48'
GIRDER 2 SPAN 47	2085.34'	2079.81'

TABLE OF ELEVATIONS			
LOCATION	TOP LEFT RAIL	TOP OF TIE	TOP RIGHT RAIL
ELEVATION	2086.73'	2085.08'	2086.71'

TABLE OF GIRDER ELEVATIONS		
LOCATION	TOP OF GIRDER	BOTTOM OF GIRDER
GIRDER 1 SPAN 47	2085.31'	2079.75'
GIRDER 2 SPAN 47	2085.23'	2079.71'
GIRDER 1 SPAN 48	2085.31'	2079.75'
GIRDER 2 SPAN 48	2085.24'	2079.71'

TABLE OF ELEVATIONS			
LOCATION	TOP LEFT RAIL	TOP OF TIE	TOP RIGHT RAIL
ELEVATION	2086.75'	2086.10'	2086.74'

TABLE OF GIRDER ELEVATIONS		
LOCATION	TOP OF GIRDER	BOTTOM OF GIRDER
GIRDER 1 SPAN 48	2085.43'	2079.90'
GIRDER 2 SPAN 48	2085.27'	2079.76'
GIRDER 1 SPAN 49	2085.43'	2079.92'
GIRDER 2 SPAN 49	2085.22'	2079.72'

Preliminary Draft for Agency Review

NOTES:
1.) LEFT AND RIGHT DIRECTIONS ARE BASED ON A WEST ORIENTATION LOOKING UPSTATION OF RAILROAD ALONG CENTERLINE OF TRACK.

2.) STATIONING VALUES REFLECT ASSUMPTION THAT THE EAST ABUTMENT INSIDE FACE EQUALS 10+00 AT THE TRACK CENTERLINE.

SURVEYOR'S CERTIFICATION

THIS MAP CORRECTLY REPRESENTS A TOPOGRAPHIC SURVEY PERFORMED AUGUST 22-26, 2016, BY ME OR UNDER MY DIRECTION AT THE REQUEST OF ALAN K. BLOOMQUIST, MANAGER STRUCTURES DESIGN, BNSF RAILWAY.

PRELIMINARY

ALLISON K. YOUNGER, REGISTERED PROFESSIONAL LAND SURVEYOR IDAHO REGISTRATION NO. 12724

DAVID EVANS AND ASSOCIATES INC.
908 N. HOWARD ST. SUITE 300
SPOKANE, WA 99201
Phone: 509.252.5900

811 Know what's below. Call before you dig.

DES:	
DRAWN: KMD	
CHECK: DDHA/AKY	
DATE: SEPT. 2016	
AUTH:	
LINE SEG: 0045	

BNSF RAILWAY
BRIDGE ENGINEERING KANSAS CITY, KS
APPROVED:
ASST. DIRECTOR STRUCTURES DESIGN

SANDPOINT JCT, ID TO EAST ALGOMA, ID
BRIDGE NO. 003.90
OVER LAKE PEND OREILLE NEAR SANDPOINT, ID
PIER PLAN & PROFILES

PLAN NO: 0045-003.900-013 SHEET: 13 OF 24

File Location: J:\BNSFDOD0119\4000\AD\SWSHEETS\Sandpoint Br\dgn\0045-003.900-013.DGN

Date Printed: 9/30/2016 Time Printed: 4:58:11 PM

USCG0010993/27

PIER PLAN & PROFILES

EAST
TO SANDPOINT JCT, ID

WEST
TO EAST ALGOMA, ID

N

0 5 10
SCALE IN FEET
HORIZONTAL SCALE: 1" = 5'

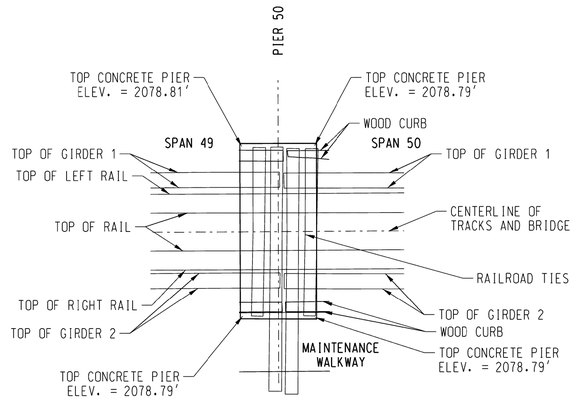

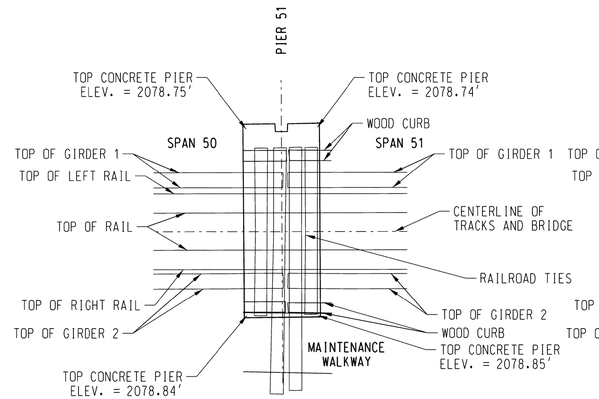

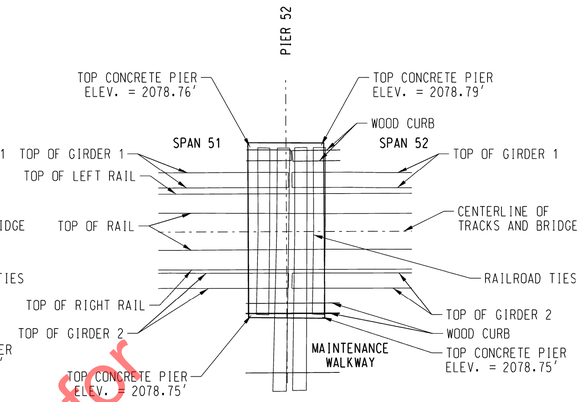

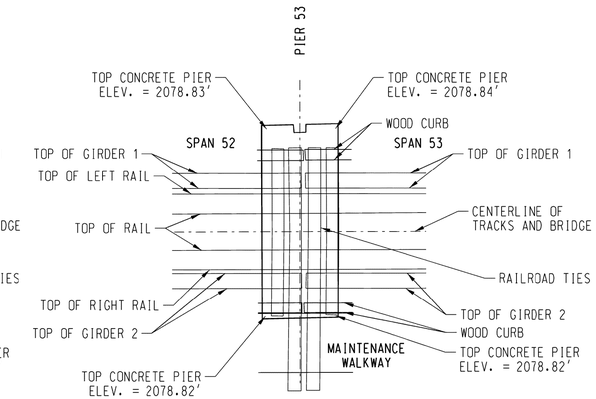

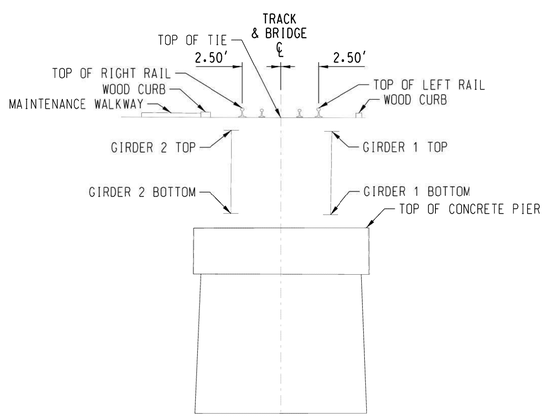

PIER 50
LOOKING RAILROAD EAST

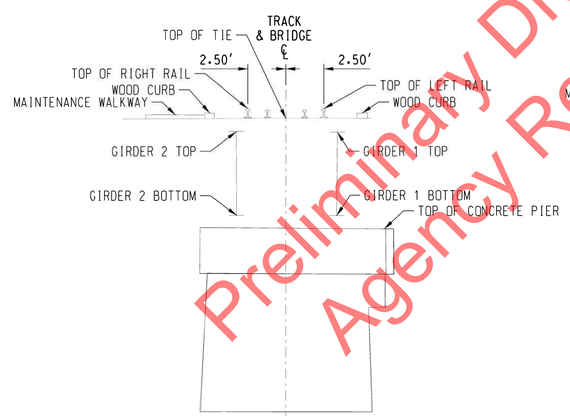

PIER 51
LOOKING RAILROAD EAST

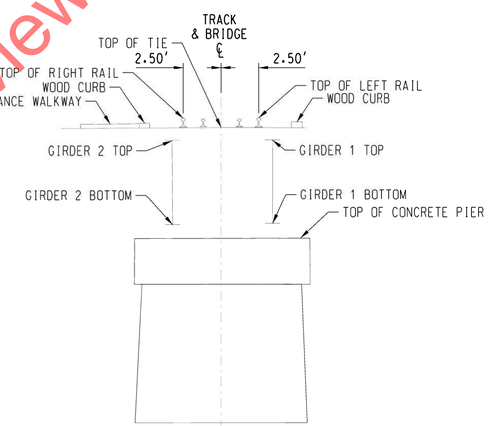

PIER 52
LOOKING RAILROAD EAST

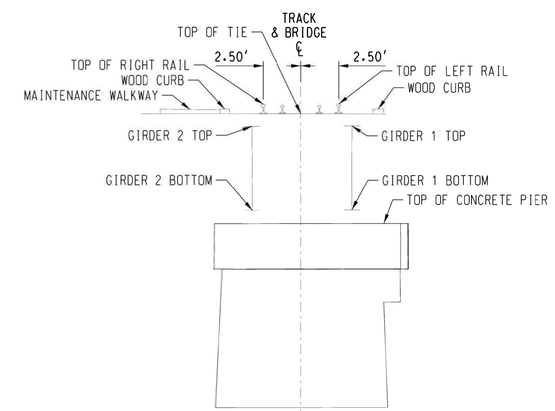

PIER 53
LOOKING RAILROAD EAST

TABLE OF ELEVATIONS

LOCATION	TOP LEFT RAIL	TOP OF TIE	TOP RIGHT RAIL
ELEVATION	2086.73'	2086.08'	2086.73'

TABLE OF GIRDER ELEVATIONS

LOCATION	TOP OF GIRDER	BOTTOM OF GIRDER
GIRDER 1 SPAN 49	2085.22'	2079.69'
GIRDER 2 SPAN 49	2085.26'	2079.73'
GIRDER 1 SPAN 50	2085.18'	2079.67'
GIRDER 2 SPAN 50	2085.26'	2079.67'

TABLE OF ELEVATIONS

LOCATION	TOP LEFT RAIL	TOP OF TIE	TOP RIGHT RAIL
ELEVATION	2086.70'	2086.06'	2086.70'

TABLE OF GIRDER ELEVATIONS

LOCATION	TOP OF GIRDER	BOTTOM OF GIRDER
GIRDER 1 SPAN 50	2085.16'	2079.63'
GIRDER 2 SPAN 50	2085.19'	2079.65'
GIRDER 1 SPAN 51	2085.15'	2079.63'
GIRDER 2 SPAN 51	2085.19'	2079.65'

TABLE OF ELEVATIONS

LOCATION	TOP LEFT RAIL	TOP OF TIE	TOP RIGHT RAIL
ELEVATION	2086.73'	2086.09'	2086.70'

TABLE OF GIRDER ELEVATIONS

LOCATION	TOP OF GIRDER	BOTTOM OF GIRDER
GIRDER 1 SPAN 51	2085.26'	2079.75'
GIRDER 2 SPAN 51	2085.23'	2079.66'
GIRDER 1 SPAN 52	2085.27'	2079.75'
GIRDER 2 SPAN 52	2085.22'	2079.66'

TABLE OF ELEVATIONS

LOCATION	TOP LEFT RAIL	TOP OF TIE	TOP RIGHT RAIL
ELEVATION	2086.73'	2086.10'	2086.72'

TABLE OF GIRDER ELEVATIONS

LOCATION	TOP OF GIRDER	BOTTOM OF GIRDER
GIRDER 1 SPAN 52	2085.28'	2079.73'
GIRDER 2 SPAN 52	2085.26'	2079.70'
GIRDER 1 SPAN 53	2085.28'	2079.73'
GIRDER 2 SPAN 53	2085.26'	2079.70'

Preliminary Draft for Agency Review

DAVID EVANS AND ASSOCIATES INC.
908 N. HOWARD ST. SUITE 300
SPOKANE, WA 99201
Phone: 509.252.5900

811 Know what's below. Call before you dig.

NOTES:
1.) LEFT AND RIGHT DIRECTIONS ARE BASED ON A WEST ORIENTATION LOOKING UPSTATION OF RAILROAD ALONG CENTERLINE OF TRACK.

2.) STATIONING VALUES REFLECT ASSUMPTION THAT THE EAST ABUTMENT INSIDE FACE EQUALS 10+00 AT THE TRACK CENTERLINE.

SURVEYOR'S CERTIFICATION

THIS MAP CORRECTLY REPRESENTS A TOPOGRAPHIC SURVEY PERFORMED AUGUST 22-26, 2016, BY ME OR UNDER MY DIRECTION AT THE REQUEST OF ALAN K. BLOOMQUIST, MANAGER STRUCTURES DESIGN, BNSF RAILWAY.

PRELIMINARY

ALLISON K. YOUNGER, REGISTERED PROFESSIONAL LAND SURVEYOR IDAHO REGISTRATION NO. 12724

DES:	
DRAWN:	KMD
CHECK:	DDHA/AKY
DATE:	SEPT. 2016
AUTH:	
LINE SEG:	0045

BNSF RAILWAY
BRIDGE ENGINEERING KANSAS CITY, KS

APPROVED:
ASST. DIRECTOR STRUCTURES DESIGN

SANDPOINT JCT, ID TO EAST ALGOMA, ID
BRIDGE NO. 003.90
OVER LAKE PEND OREILLE NEAR SANDPOINT, ID

PIER PLAN & PROFILES

PLAN NO: 0045-003.900-014 SHEET: 14 OF 24

File Location: J:\BNSF\0000119\ACAD\DWG\SHEETS\Sandpoint Br Edge\0045-003.900-014.DGN

Date Printed: 9/30/2016 Time Printed: 4:58:43 PM

PIER PLAN & PROFILES

EAST
TO SANDPOINT JCT. ID

WEST
TO EAST ALGOMA. ID

N

0 5 10
SCALE IN FEET
HORIZONTAL SCALE: 1" = 5'

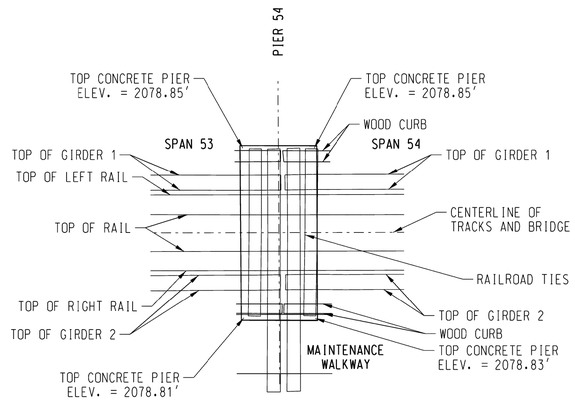

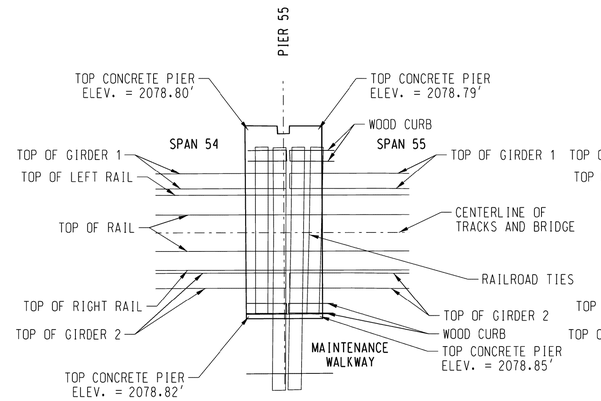

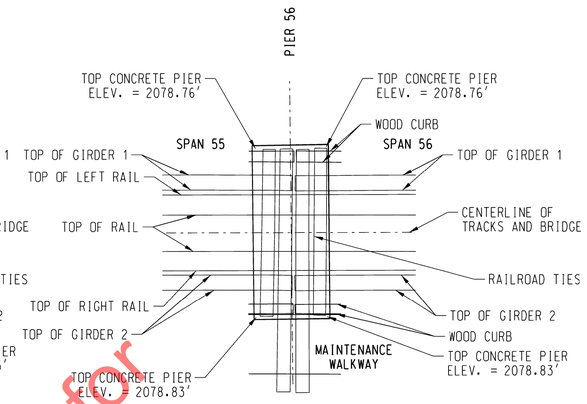

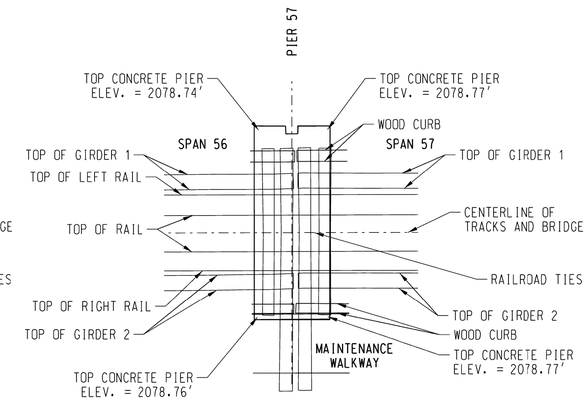

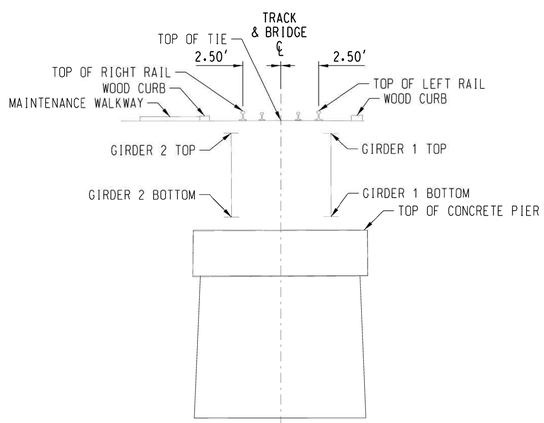

PIER 54
LOOKING RAILROAD EAST

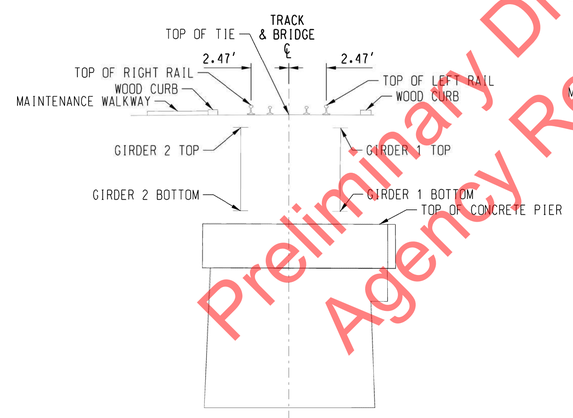

PIER 55
LOOKING RAILROAD EAST

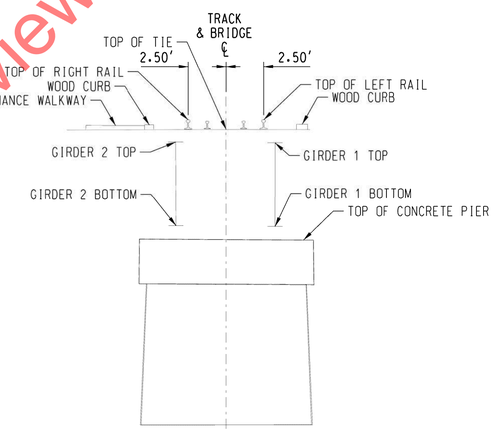

PIER 56
LOOKING RAILROAD EAST

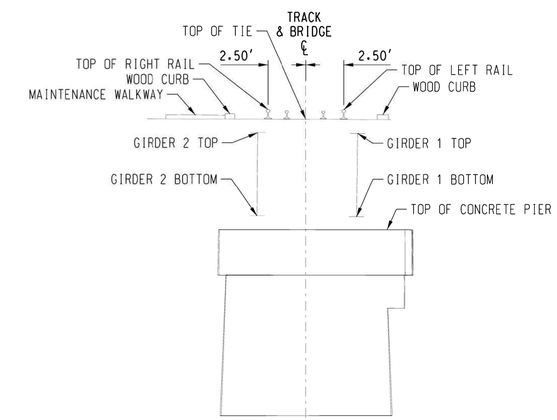

PIER 57
LOOKING RAILROAD EAST

TABLE OF ELEVATIONS

LOCATION	TOP LEFT RAIL	TOP OF TIE	TOP RIGHT RAIL
ELEVATION	2086.72'	2086.10'	2086.71'

TABLE OF GIRDER ELEVATIONS

LOCATION	TOP OF GIRDER	BOTTOM OF GIRDER
GIRDER 1 SPAN 53	2085.25'	2079.72'
GIRDER 2 SPAN 53	2085.26'	2079.70'
GIRDER 1 SPAN 54	2085.25'	2079.73'
GIRDER 2 SPAN 54	2085.26'	2079.70'

TABLE OF ELEVATIONS

LOCATION	TOP LEFT RAIL	TOP OF TIE	TOP RIGHT RAIL
ELEVATION	2086.68'	2086.05'	2086.68'

TABLE OF GIRDER ELEVATIONS

LOCATION	TOP OF GIRDER	BOTTOM OF GIRDER
GIRDER 1 SPAN 54	2085.17'	2079.64'
GIRDER 2 SPAN 54	2085.19'	2079.68'
GIRDER 1 SPAN 55	2085.17'	2079.64'
GIRDER 2 SPAN 55	2085.19'	2079.69'

TABLE OF ELEVATIONS

LOCATION	TOP LEFT RAIL	TOP OF TIE	TOP RIGHT RAIL
ELEVATION	2086.72'	2086.08'	2086.71'

TABLE OF GIRDER ELEVATIONS

LOCATION	TOP OF GIRDER	BOTTOM OF GIRDER
GIRDER 1 SPAN 55	2085.20'	2079.66'
GIRDER 2 SPAN 55	2085.25'	2079.72'
GIRDER 1 SPAN 56	2085.20'	2079.67'
GIRDER 2 SPAN 56	2085.25'	2079.72'

TABLE OF ELEVATIONS

LOCATION	TOP LEFT RAIL	TOP OF TIE	TOP RIGHT RAIL
ELEVATION	2086.68'	2086.06'	2086.70'

TABLE OF GIRDER ELEVATIONS

LOCATION	TOP OF GIRDER	BOTTOM OF GIRDER
GIRDER 1 SPAN 56	2085.13'	2079.61'
GIRDER 2 SPAN 56	2085.18'	2079.67'
GIRDER 1 SPAN 57	2085.13'	2079.61'
GIRDER 2 SPAN 57	2085.18'	2079.68'

Preliminary Draft for Agency Review

NOTES:
1.) LEFT AND RIGHT DIRECTIONS ARE BASED ON A WEST ORIENTATION LOOKING UPSTATION OF RAILROAD ALONG CENTERLINE OF TRACK.

2.) STATIONING VALUES REFLECT ASSUMPTION THAT THE EAST ABUTMENT INSIDE FACE EQUALS 10+00 AT THE TRACK CENTERLINE.

SURVEYOR'S CERTIFICATION

THIS MAP CORRECTLY REPRESENTS A TOPOGRAPHIC SURVEY PERFORMED AUGUST 22-26, 2016, BY ME OR UNDER MY DIRECTION AT THE REQUEST OF ALAN K. BLOOMQUIST, MANAGER STRUCTURES DESIGN, BNSF RAILWAY.

PRELIMINARY

ALLISON K. YOUNGER, REGISTERED PROFESSIONAL LAND SURVEYOR IDAHO REGISTRATION NO. 12724

DAVID EVANS AND ASSOCIATES INC.
908 N. HOWARD ST. SUITE 300
SPOKANE, WA 99201
Phone: 509.252.5900

811 Know what's below. Call before you dig.

DES:	
DRAWN:	KMO
CHECK:	DDHA/AKY
DATE:	SEPT. 2016
AUTH:	
LINE SEG:	0045

BNSF RAILWAY
BRIDGE ENGINEERING KANSAS CITY, KS
APPROVED:
ASST. DIRECTOR STRUCTURES DESIGN

SANDPOINT JCT. ID TO EAST ALGOMA, ID
BRIDGE NO. 003.90
OVER LAKE PEND OREILLE NEAR SANDPOINT, ID
PIER PLAN & PROFILES

PLAN NO: 0045-003.900-015 SHEET: 15 OF 24

USCG001013/27

PIER PLAN & PROFILES

EAST
TO SANDPOINT JCT, ID

WEST
TO EAST ALGOMA, ID

N

0 5 10
SCALE IN FEET
HORIZONTAL SCALE: 1" = 5'

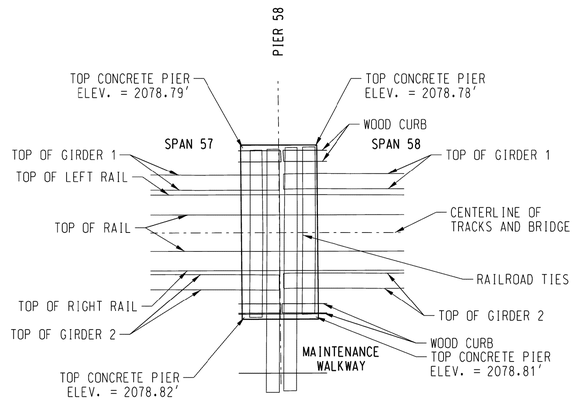

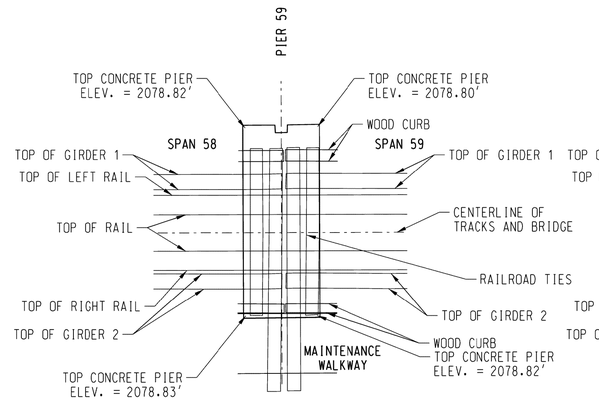

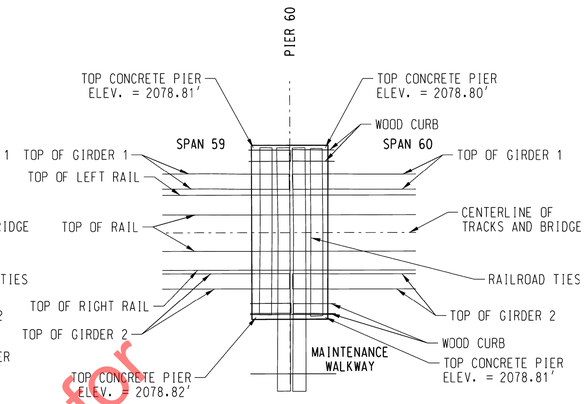

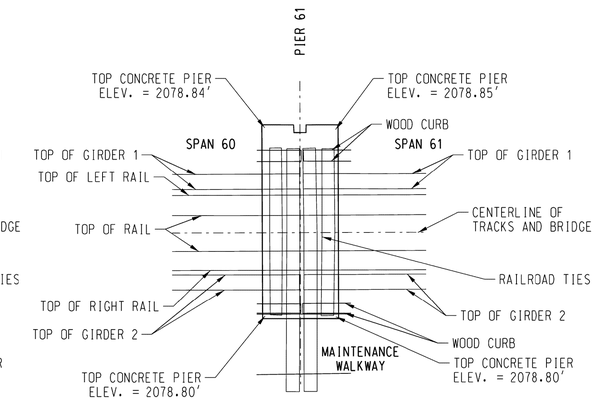

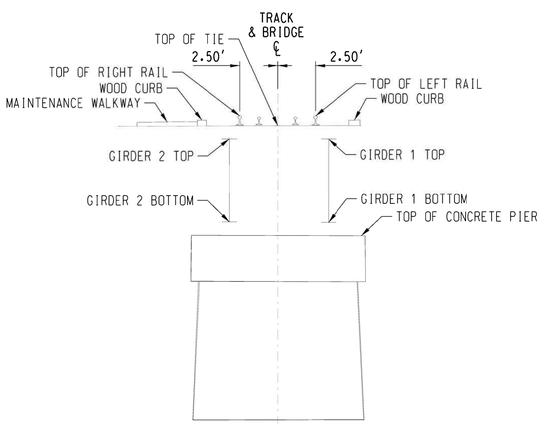

PIER 58
LOOKING RAILROAD EAST

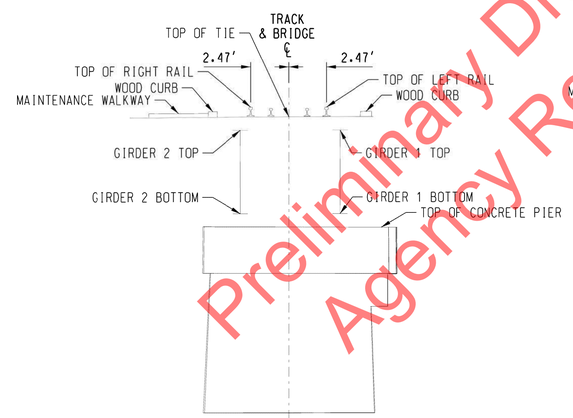

PIER 59
LOOKING RAILROAD EAST

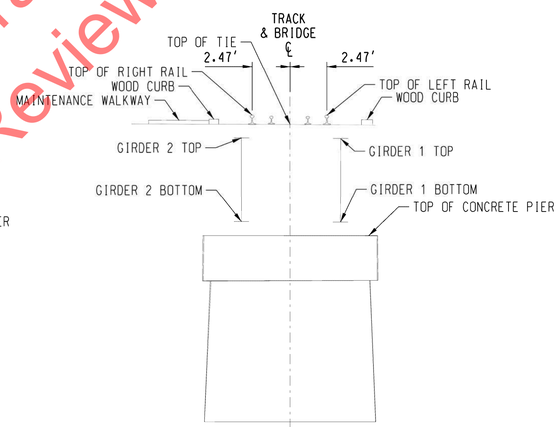

PIER 60
LOOKING RAILROAD EAST

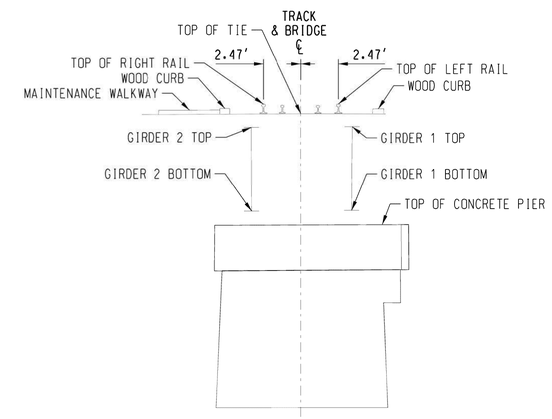

PIER 61
LOOKING RAILROAD EAST

TABLE OF ELEVATIONS

LOCATION	TOP LEFT RAIL	TOP OF TIE	TOP RIGHT RAIL
ELEVATION	2086.71'	2086.06'	2086.71'

TABLE OF GIRDER ELEVATIONS

LOCATION	TOP OF GIRDER	BOTTOM OF GIRDER
GIRDER 1 SPAN 57	2085.17'	2079.64'
GIRDER 2 SPAN 57	2085.19'	2079.69'
GIRDER 1 SPAN 58	2085.18'	2079.67'
GIRDER 2 SPAN 58	2085.20'	2079.70'

TABLE OF ELEVATIONS

LOCATION	TOP LEFT RAIL	TOP OF TIE	TOP RIGHT RAIL
ELEVATION	2086.75'	2086.11'	2086.74'

TABLE OF GIRDER ELEVATIONS

LOCATION	TOP OF GIRDER	BOTTOM OF GIRDER
GIRDER 1 SPAN 58	2085.23'	2079.70'
GIRDER 2 SPAN 58	2085.21'	2079.69'
GIRDER 1 SPAN 59	2085.23'	2079.70'
GIRDER 2 SPAN 59	2085.21'	2079.69'

TABLE OF ELEVATIONS

LOCATION	TOP LEFT RAIL	TOP OF TIE	TOP RIGHT RAIL
ELEVATION	2086.78'	2086.16'	2086.79'

TABLE OF GIRDER ELEVATIONS

LOCATION	TOP OF GIRDER	BOTTOM OF GIRDER
GIRDER 1 SPAN 59	2085.23'	2079.70'
GIRDER 2 SPAN 59	2085.28'	2079.74'
GIRDER 1 SPAN 60	2085.23'	2079.70'
GIRDER 2 SPAN 60	2085.28'	2079.74'

TABLE OF ELEVATIONS

LOCATION	TOP LEFT RAIL	TOP OF TIE	TOP RIGHT RAIL
ELEVATION	2086.81'	2086.18'	2086.82'

TABLE OF GIRDER ELEVATIONS

LOCATION	TOP OF GIRDER	BOTTOM OF GIRDER
GIRDER 1 SPAN 60	2085.32'	2079.78'
GIRDER 2 SPAN 60	2085.27'	2079.73'
GIRDER 1 SPAN 61	2085.32'	2079.78'
GIRDER 2 SPAN 61	2085.27'	2079.74'

Preliminary Draft for Agency Review

NOTES:
1.) LEFT AND RIGHT DIRECTIONS ARE BASED ON A WEST ORIENTATION LOOKING UPSTATION OF RAILROAD ALONG CENTERLINE OF TRACK.

2.) STATIONING VALUES REFLECT ASSUMPTION THAT THE EAST ABUTMENT INSIDE FACE EQUALS 10+00 AT THE TRACK CENTERLINE.

SURVEYOR'S CERTIFICATION

THIS MAP CORRECTLY REPRESENTS A TOPOGRAPHIC SURVEY PERFORMED AUGUST 22-26, 2016, BY ME OR UNDER MY DIRECTION AT THE REQUEST OF ALAN K. BLOOMQUIST, MANAGER STRUCTURES DESIGN, BNSF RAILWAY.

PRELIMINARY

ALLISON K. YOUNGER, REGISTERED PROFESSIONAL LAND SURVEYOR IDAHO REGISTRATION NO. 12724

DAVID EVANS AND ASSOCIATES INC.
908 N. HOWARD ST. SUITE 300
SPOKANE, WA 99201
Phone: 509.252.5900

811 Know what's below. Call before you dig.

DES:	
DRAWN:	KMD
CHECK:	DDHA/AKY
DATE:	SEPT. 2016
AUTH:	
LINE SEG:	0045

BNSF RAILWAY
BRIDGE ENGINEERING KANSAS CITY, KS

APPROVED: _____
ASST. DIRECTOR STRUCTURES DESIGN

SANDPOINT JCT, ID TO EAST ALGOMA, ID
BRIDGE NO. 003.90
OVER LAKE PEND OREILLE NEAR SANDPOINT, ID
PIER PLAN & PROFILES

PLAN NO: 0045-003.900-016 SHEET: 16 OF 24

File Location: :H:\BNSF\000011\9\#ADDADWG\#SHEETS\#Sandpoint Bridge\#0045-003.900-016.DGN

Date Printed: 9/30/2016 Time Printed: 4:59:46 PM

USCG0011023/27

PIER PLAN & PROFILES

EAST
TO SANDPOINT JCT. ID

WEST
TO EAST ALGOMA. ID

N

0 5 10
SCALE IN FEET
HORIZONTAL SCALE: 1" = 5'

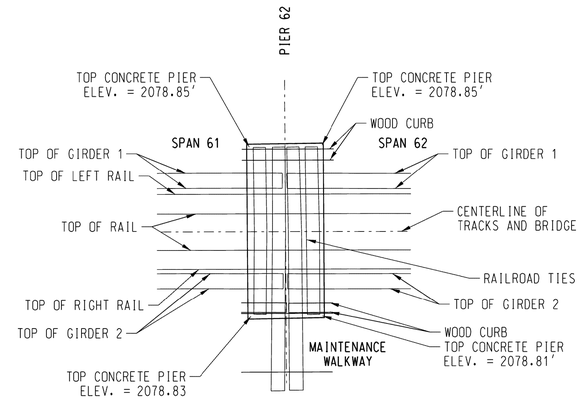

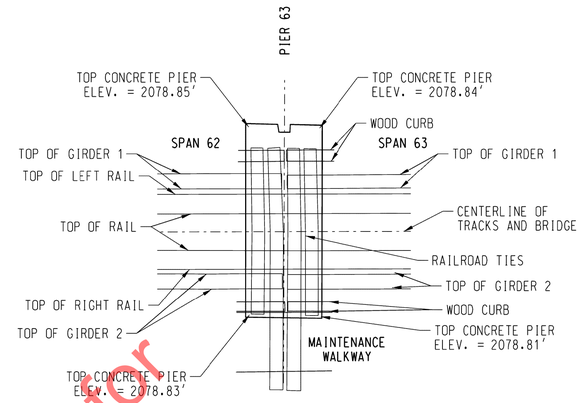

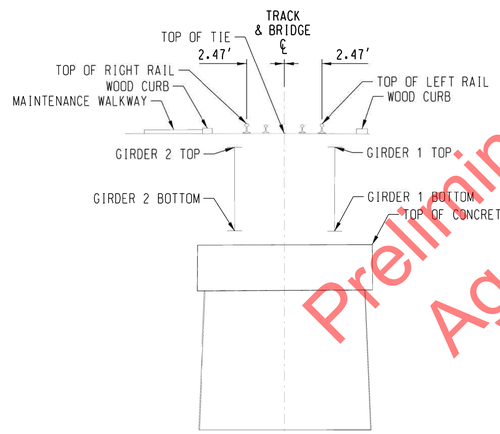

PIER 62
LOOKING RAILROAD EAST

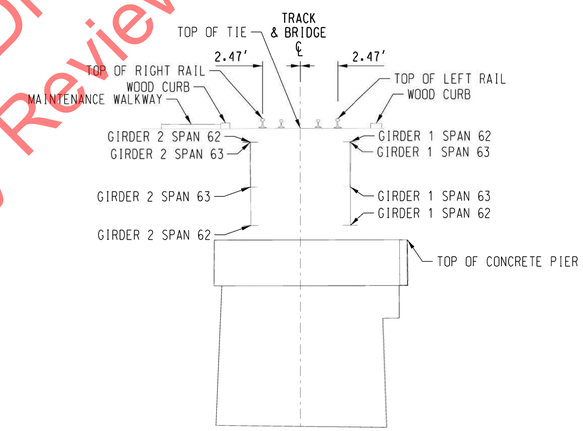

PIER 63
LOOKING RAILROAD EAST

TABLE OF ELEVATIONS

LOCATION	TOP LEFT RAIL	TOP OF TIE	TOP RIGHT RAIL
ELEVATION	2086.83'	2086.19'	2086.84'

TABLE OF GIRDER ELEVATIONS

LOCATION	TOP OF GIRDER	BOTTOM OF GIRDER
GIRDER 1 SPAN 61	2085.29'	2079.74'
GIRDER 2 SPAN 61	2085.28'	2079.76'
GIRDER 1 SPAN 62	2085.30'	2079.75'
GIRDER 2 SPAN 62	2085.28'	2079.76'

TABLE OF ELEVATIONS

LOCATION	TOP LEFT RAIL	TOP OF TIE	TOP RIGHT RAIL
ELEVATION	2086.85'	2086.21'	2086.85'

TABLE OF GIRDER ELEVATIONS

LOCATION	TOP OF GIRDER	BOTTOM OF GIRDER
GIRDER 1 SPAN 62	2085.32'	2079.80'
GIRDER 2 SPAN 62	2085.29'	2079.78'
GIRDER 1 SPAN 63	2085.32'	2082.33'
GIRDER 2 SPAN 63	2085.28'	2082.31'

NOTES:
1.) LEFT AND RIGHT DIRECTIONS ARE BASED ON A WEST ORIENTATION LOOKING UPSTATION OF RAILROAD ALONG CENTERLINE OF TRACK.

2.) STATIONING VALUES REFLECT ASSUMPTION THAT THE EAST ABUTMENT INSIDE FACE EQUALS 10+00 AT THE TRACK CENTERLINE.

SURVEYOR'S CERTIFICATION

THIS MAP CORRECTLY REPRESENTS A TOPOGRAPHIC SURVEY PERFORMED AUGUST 22-26, 2016, BY ME OR UNDER MY DIRECTION AT THE REQUEST OF ALAN K. BLOOMQUIST, MANAGER STRUCTURES DESIGN, BNSF RAILWAY.

PRELIMINARY

ALLISON K. YOUNGER, REGISTERED PROFESSIONAL LAND SURVEYOR IDAHO REGISTRATION NO. 12724

Preliminary Draft for Agency Review

DAVID EVANS AND ASSOCIATES INC.
908 N. HOWARD ST. SUITE 300
SPOKANE, WA 99201
Phone: 509.252.5900

811 Know what's below. Call before you dig.

DES:	
DRAWN: KMD	
CHECK: DDHA/AKY	
DATE: SEPT. 2016	
AUTH:	
LINE SEG: 0045	

BNSF RAILWAY
BRIDGE ENGINEERING KANSAS CITY, KS
APPROVED:
ASST. DIRECTOR STRUCTURES DESIGN

SANDPOINT JCT. ID TO EAST ALGOMA, ID
BRIDGE NO. 003.90
OVER LAKE PEND OREILLE NEAR SANDPOINT, ID
PIER PLAN & PROFILES

PLAN NO: 0045-003.900-017 SHEET: 17 OF 24

File Location: P:\#BNSF00000119\#04DCAD\#SHEETS\#Sandpoint Bridge\#0045-003.900-017.DGN

Date Printed: 9/30/2016 Time Printed: 5:00:13 PM

PIER PLAN & PROFILES

EAST
TO SANDPOINT JCT, ID

WEST
TO EAST ALGOMA, ID

SCALE IN FEET
HORIZONTAL SCALE: 1" = 5'

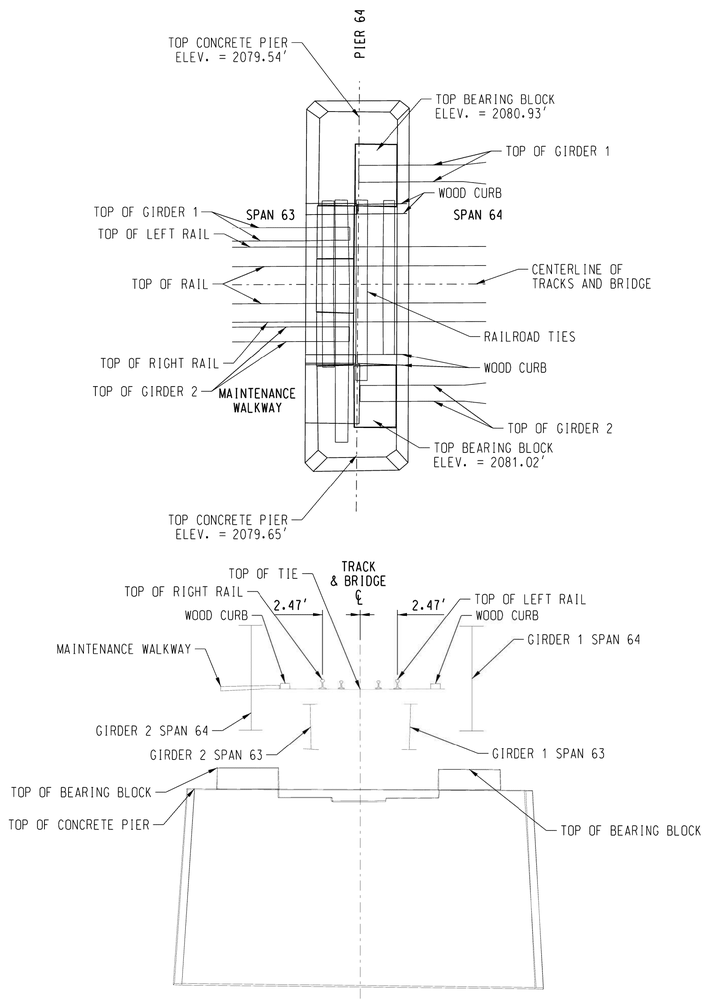

PIER 64
LOOKING RAILROAD EAST

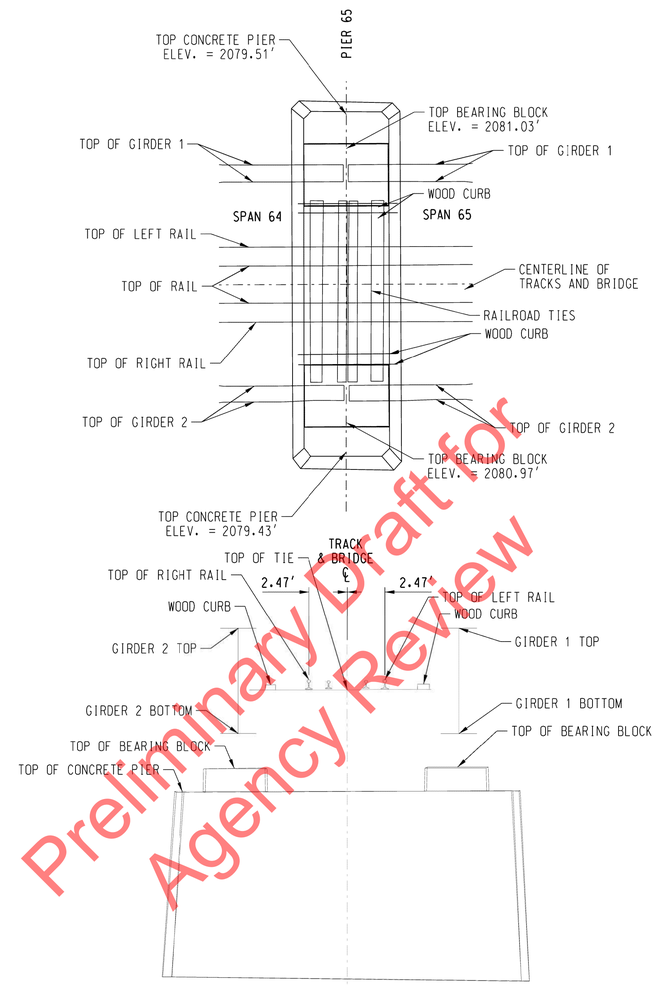

PIER 65
LOOKING RAILROAD EAST

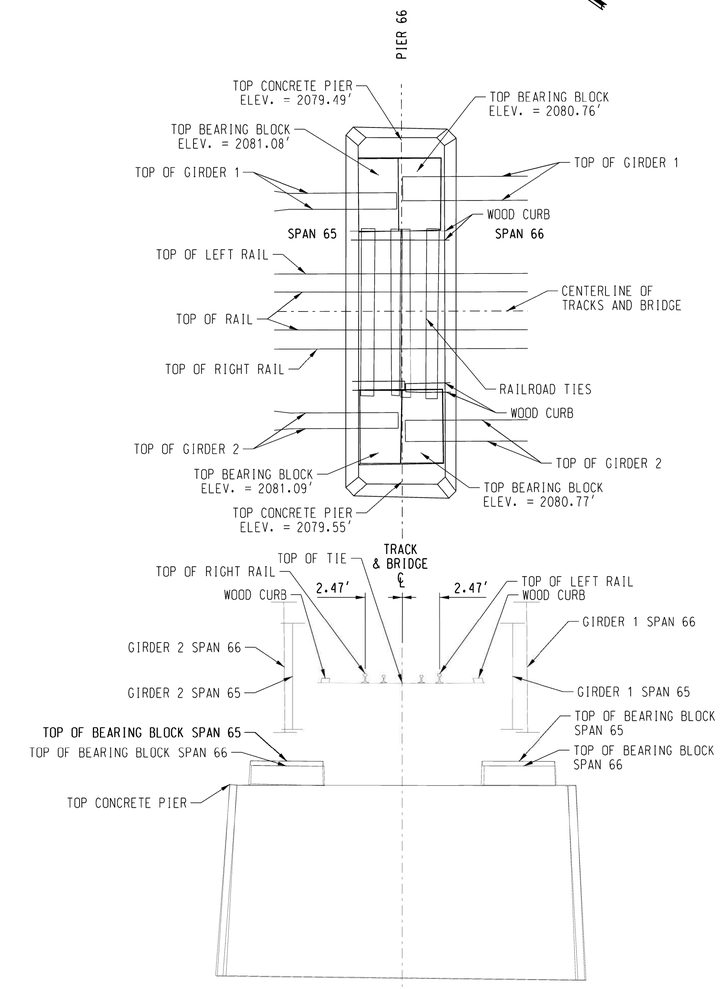

PIER 66
LOOKING RAILROAD EAST

TABLE OF ELEVATIONS

LOCATION	TOP LEFT RAIL	TOP OF TIE	TOP RIGHT RAIL
ELEVATION	2086.89'	2086.25'	2086.90'

TABLE OF GIRDER ELEVATIONS

LOCATION	TOP OF GIRDER	BOTTOM OF GIRDER
GIRDER 1 SPAN 63	2085.30'	2082.26'
GIRDER 2 SPAN 63	2085.27'	2082.92'
GIRDER 1 SPAN 64	2090.19'	2083.34'
GIRDER 2 SPAN 64	2090.25'	2083.37'

TABLE OF ELEVATIONS

LOCATION	TOP LEFT RAIL	TOP OF TIE	TOP RIGHT RAIL
ELEVATION	2086.85'	2086.19'	2086.84'

TABLE OF GIRDER ELEVATIONS

LOCATION	TOP OF GIRDER	BOTTOM OF GIRDER
GIRDER 1 SPAN 64	2090.17'	2082.32'
GIRDER 2 SPAN 64	2090.13'	2083.32'
GIRDER 1 SPAN 65	2090.17'	2083.30'
GIRDER 2 SPAN 65	2090.14'	2083.32'

TABLE OF ELEVATIONS

LOCATION	TOP LEFT RAIL	TOP OF TIE	TOP RIGHT RAIL
ELEVATION	2086.87'	2086.22'	2086.87'

TABLE OF GIRDER ELEVATIONS

LOCATION	TOP OF GIRDER	BOTTOM OF GIRDER
GIRDER 1 SPAN 65	2090.18'	2083.28'
GIRDER 2 SPAN 65	2090.19'	2083.30'
GIRDER 1 SPAN 66	2091.58'	2082.99'
GIRDER 2 SPAN 66	2091.59'	2082.97'

DAVID EVANS AND ASSOCIATES INC.
908 N. HOWARD ST. SUITE 300
SPOKANE, WA 99201
Phone: 509.252.5900

811 Know what's below. Call before you dig.

NOTES:
1.) LEFT AND RIGHT DIRECTIONS ARE BASED ON A WEST ORIENTATION LOOKING UPSTATION OF RAILROAD ALONG CENTERLINE OF TRACK.

2.) STATIONING VALUES REFLECT ASSUMPTION THAT THE EAST ABUTMENT INSIDE FACE EQUALS 10+00 AT THE TRACK CENTERLINE.

SURVEYOR'S CERTIFICATION

THIS MAP CORRECTLY REPRESENTS A TOPOGRAPHIC SURVEY PERFORMED AUGUST 22-26, 2016, BY ME OR UNDER MY DIRECTION AT THE REQUEST OF ALAN K. BLOOMQUIST, MANAGER STRUCTURES DESIGN, BNSF RAILWAY.

PRELIMINARY

ALLISON K. YOUNGER, REGISTERED PROFESSIONAL LAND SURVEYOR IDAHO REGISTRATION NO. 12724

Preliminary Draft for Agency Review

DES:	
DRAWN:	KMD
CHECK:	DDHA/AKY
DATE:	SEPT. 2016
AUTH:	
LINE SEG:	0045

BNSF RAILWAY
BRIDGE ENGINEERING KANSAS CITY, KS
APPROVED:
ASST. DIRECTOR STRUCTURES DESIGN

SANDPOINT JCT, ID TO EAST ALGOMA, ID
BRIDGE NO. 003.90
OVER LAKE PEND OREILLE NEAR SANDPOINT, ID
PIER PLAN & PROFILES

PLAN NO: 0045-003.900-018 SHEET: 18 OF 24

PIER PLAN & PROFILES

0 5 10
SCALE IN FEET
HORIZONTAL SCALE: 1" = 5'

EAST
TO SANDPOINT JCT, ID

WEST
TO EAST ALGOMA, ID

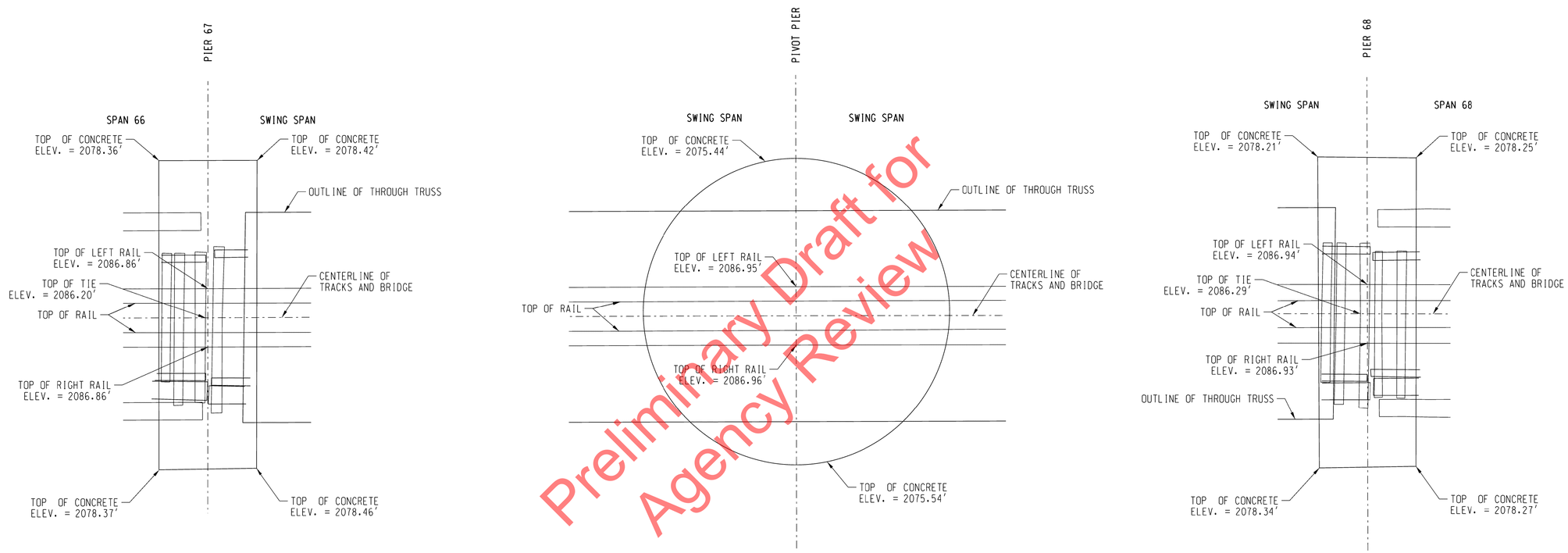

PIER 67

PIVOT PIER

PIER 68

Preliminary Draft for Agency Review

NOTES:
1.) LEFT AND RIGHT DIRECTIONS ARE BASED ON A WEST ORIENTATION LOOKING UPSTATION OF RAILROAD ALONG CENTERLINE OF TRACK.

2.) STATIONING VALUES REFLECT ASSUMPTION THAT THE EAST ABUTMENT INSIDE FACE EQUALS 10+00 AT THE TRACK CENTERLINE.

SURVEYOR'S CERTIFICATION

THIS MAP CORRECTLY REPRESENTS A TOPOGRAPHIC SURVEY PERFORMED AUGUST 22-26, 2016, BY ME OR UNDER MY DIRECTION AT THE REQUEST OF ALAN K. BLOOMQUIST, MANAGER STRUCTURES DESIGN, BNSF RAILWAY.

PRELIMINARY

ALLISON K. YOUNGER, REGISTERED PROFESSIONAL LAND SURVEYOR IDAHO REGISTRATION NO. 12724

DAVID EVANS AND ASSOCIATES INC.
908 N. HOWARD ST. SUITE 300
SPOKANE, WA 99201
Phone: 509.252.5900

811 Know what's below. Call before you dig.

DES:	BNSF RAILWAY	SANDPOINT JCT, ID TO EAST ALGOMA, ID
DRAWN: KMD	BRIDGE ENGINEERING KANSAS CITY, KS	BRIDGE NO. 003.90
CHECK: DDHA/AKY		OVER LAKE PEND OREILLE NEAR SANDPOINT, ID
DATE: SEPT. 2016	APPROVED:	PIER PLAN & PROFILES
AUTH:	ASST. DIRECTOR STRUCTURES DESIGN	PLAN NO: 0045-003.900-019 SHEET: 19 OF 24
LINE SEG: 0045		

File Location: P:\BNSF00000119\04000AD\SHEETS\Sandpoint Bridge\0045-003.900-019.DGN
Date Printed: 9/30/2016 Time Printed: 5:05:33 PM

PIER PLAN & PROFILES

0 5 10
SCALE IN FEET
HORIZONTAL SCALE: 1" = 5'

EAST
TO SANDPOINT JCT, ID

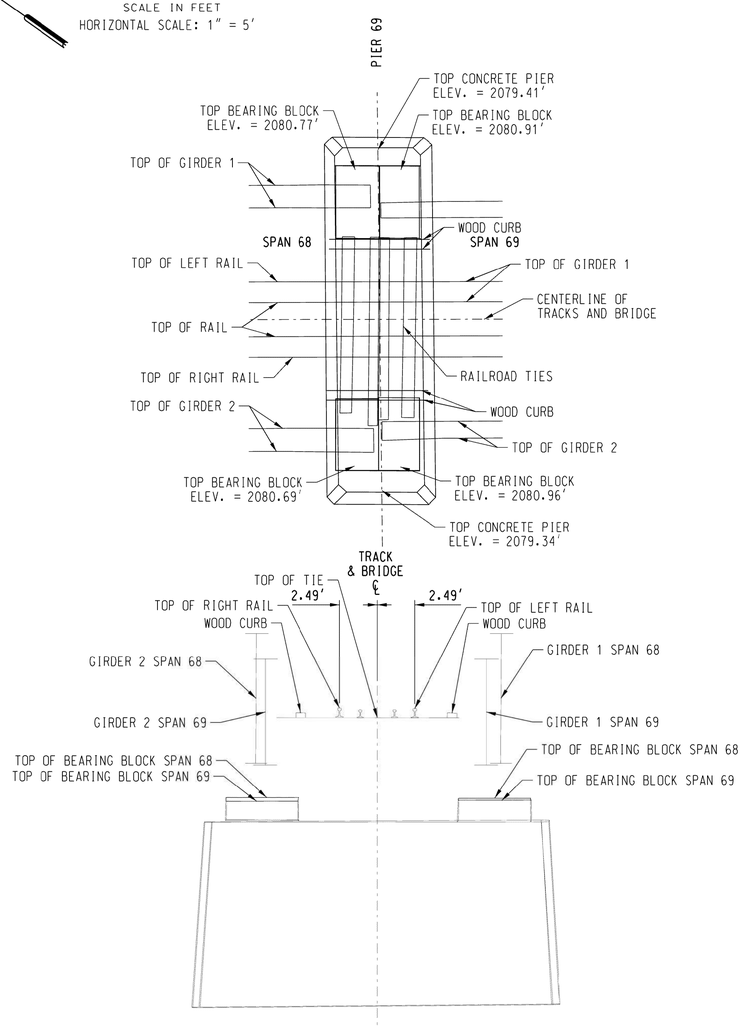

PIER 69
LOOKING RAILROAD EAST

TABLE OF ELEVATIONS			
LOCATION	TOP LEFT RAIL	TOP OF TIE	TOP RIGHT RAIL
ELEVATION	2086.87'	2086.24'	2086.87'

TABLE OF GIRDER ELEVATIONS		
LOCATION	TOP OF GIRDER	BOTTOM OF GIRDER
GIRDER 1 SPAN 68	2090.14'	2083.06'
GIRDER 2 SPAN 68	2090.07'	2083.07'
GIRDER 1 SPAN 69	2090.18'	2083.33'
GIRDER 2 SPAN 69	2090.20'	2083.38'

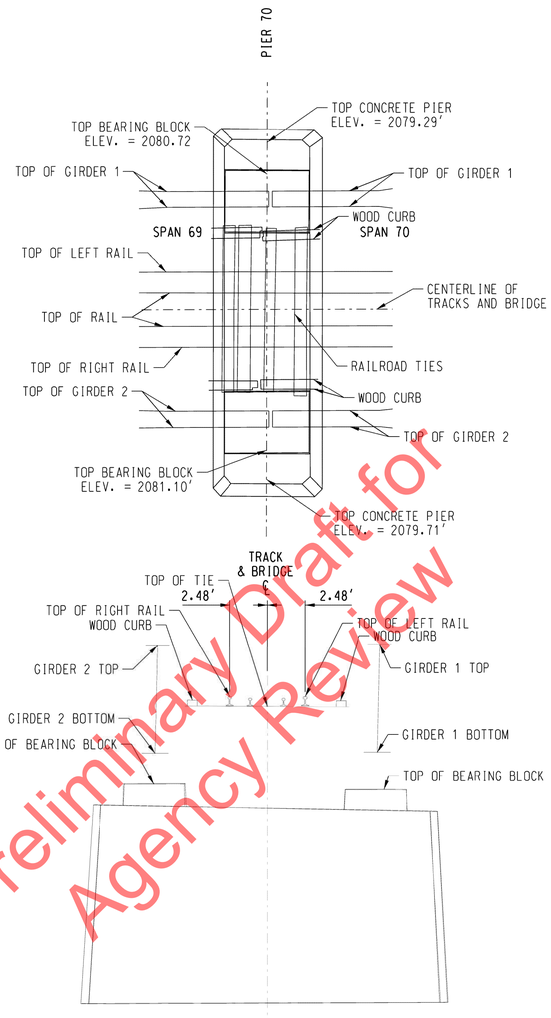

PIER 70
LOOKING RAILROAD EAST

TABLE OF ELEVATIONS			
LOCATION	TOP LEFT RAIL	TOP OF TIE	TOP RIGHT RAIL
ELEVATION	2086.87'	2086.23'	2086.88'

TABLE OF GIRDER ELEVATIONS		
LOCATION	TOP OF GIRDER	BOTTOM OF GIRDER
GIRDER 1 SPAN 69	2090.21'	2083.37'
GIRDER 2 SPAN 69	2090.22'	2083.38'
GIRDER 1 SPAN 70	2090.21'	2083.37'
GIRDER 2 SPAN 70	2090.22'	2083.38'

WEST
TO EAST ALGOMA, ID

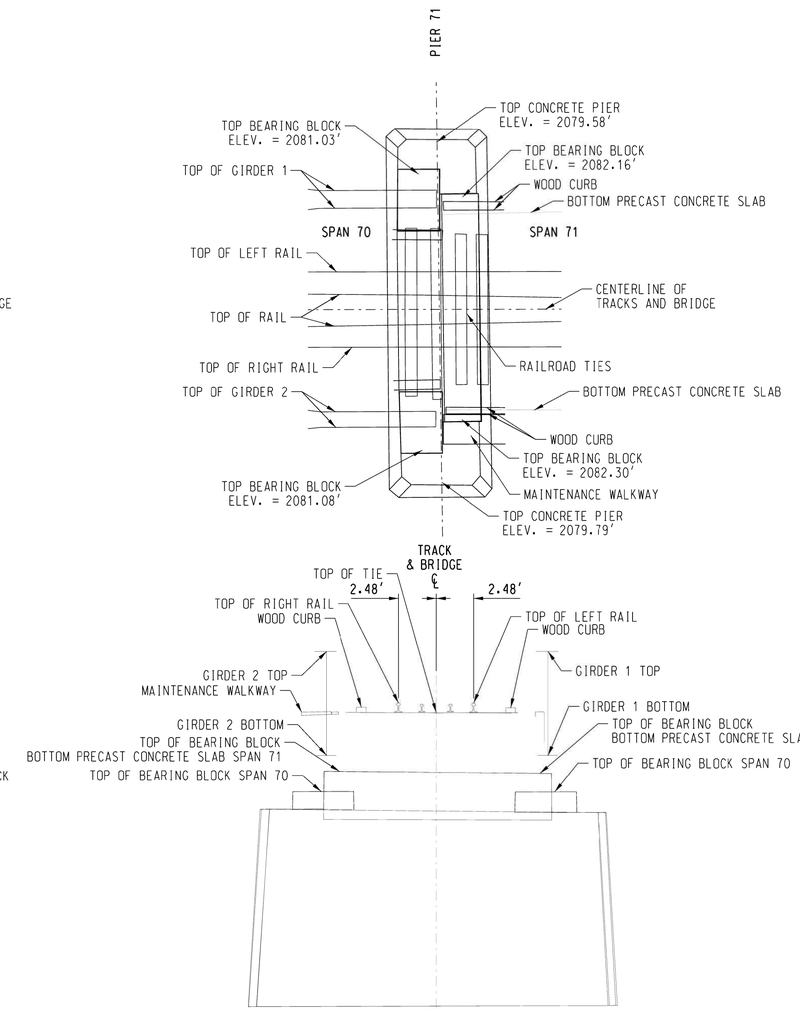

PIER 71
LOOKING RAILROAD EAST

TABLE OF ELEVATIONS			
LOCATION	TOP LEFT RAIL	TOP OF TIE	TOP RIGHT RAIL
ELEVATION	2086.81'	2086.17'	2086.82'

TABLE OF GIRDER ELEVATIONS		
LOCATION	TOP OF GIRDER	BOTTOM OF GIRDER
GIRDER 1 SPAN 70	2090.28'	2083.39'
GIRDER 2 SPAN 70	2090.28'	2083.39'

DAVID EVANS AND ASSOCIATES INC.
908 N. HOWARD ST. SUITE 300
SPOKANE, WA 99201
Phone: 509.252.5900

811 Know what's below. Call before you dig.

NOTES:
1.) LEFT AND RIGHT DIRECTIONS ARE BASED ON A WEST ORIENTATION LOOKING UPSTATION OF RAILROAD ALONG CENTERLINE OF TRACK.

2.) STATIONING VALUES REFLECT ASSUMPTION THAT THE EAST ABUTMENT INSIDE FACE EQUALS 10+00 AT THE TRACK CENTERLINE.

SURVEYOR'S CERTIFICATION

THIS MAP CORRECTLY REPRESENTS A TOPOGRAPHIC SURVEY PERFORMED AUGUST 22-26, 2016, BY ME OR UNDER MY DIRECTION AT THE REQUEST OF ALAN K. BLOOMQUIST, MANAGER STRUCTURES DESIGN, BNSF RAILWAY.

PRELIMINARY

ALLISON K. YOUNGER, REGISTERED PROFESSIONAL LAND SURVEYOR IDAHO REGISTRATION NO. 12724

Preliminary Draft for Agency Review

DES:	
DRAWN: KMD	
CHECK: DDHA/AKY	
DATE: SEPT. 2016	
AUTH:	
LINE SEG: 0045	

BNSF RAILWAY
BRIDGE ENGINEERING KANSAS CITY, KS
APPROVED:
ASST. DIRECTOR STRUCTURES DESIGN

SANDPOINT JCT, ID TO EAST ALGOMA, ID
BRIDGE NO. 003.90
OVER LAKE PEND OREILLE NEAR SANDPOINT, ID
PIER PLAN & PROFILES
PLAN NO: 0045-003.900-020 SHEET: 20 OF 24

PIER PLAN & PROFILES

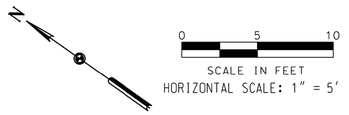

EAST
TO SANDPOINT JCT, ID

WEST
TO EAST ALGOMA, ID

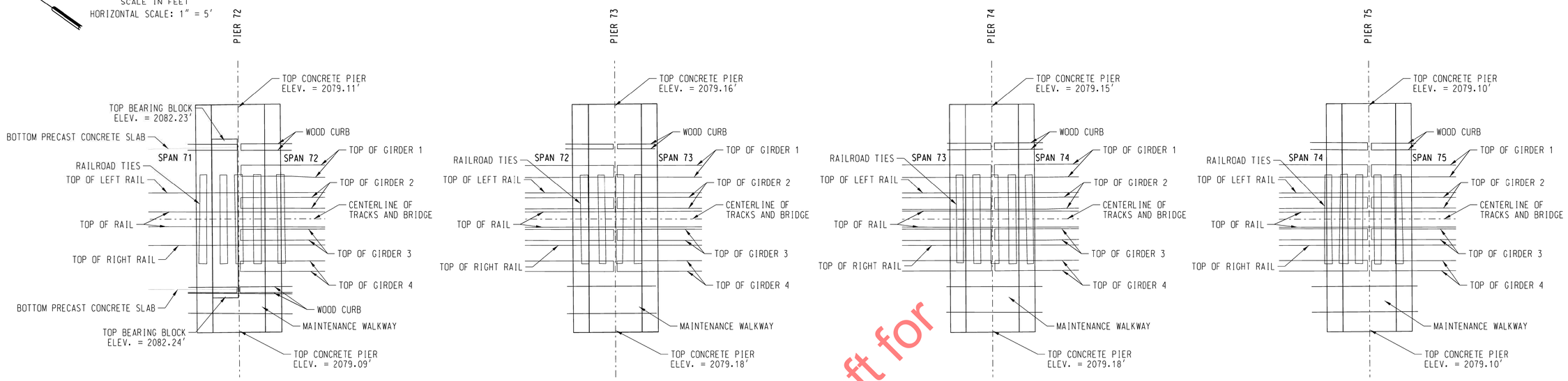

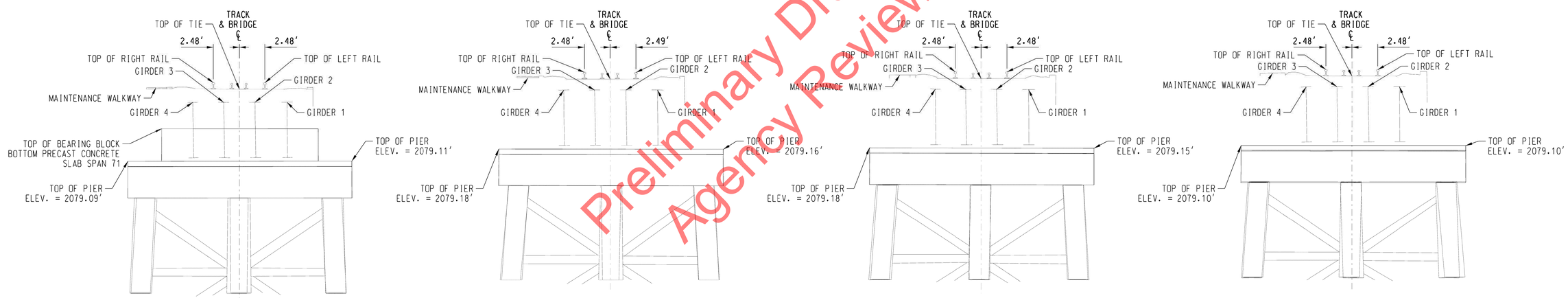

Preliminary Draft for Agency Review

PIER 72
LOOKING RAILROAD EAST

TABLE OF ELEVATIONS			
LOCATION	TOP LEFT RAIL	TOP OF TIE	TOP RIGHT RAIL
ELEVATION	2086.68'	2085.72'	2086.69'

PIER 73
LOOKING RAILROAD EAST

TABLE OF ELEVATIONS			
LOCATION	TOP LEFT RAIL	TOP OF TIE	TOP RIGHT RAIL
ELEVATION	2086.55'	2085.92'	2086.57'

PIER 74
LOOKING RAILROAD EAST

TABLE OF ELEVATIONS			
LOCATION	TOP LEFT RAIL	TOP OF TIE	TOP RIGHT RAIL
ELEVATION	2086.49'	2085.85'	2086.50'

PIER 75
LOOKING RAILROAD EAST

TABLE OF ELEVATIONS			
LOCATION	TOP LEFT RAIL	TOP OF TIE	TOP RIGHT RAIL
ELEVATION	2086.45'	2085.82'	2086.47'

NOTES:
1.) LEFT AND RIGHT DIRECTIONS ARE BASED ON A WEST ORIENTATION LOOKING UPSTATION OF RAILROAD ALONG CENTERLINE OF TRACK.

2.) STATIONING VALUES REFLECT ASSUMPTION THAT THE EAST ABUTMENT INSIDE FACE EQUALS 10+00 AT THE TRACK CENTERLINE.

SURVEYOR'S CERTIFICATION

THIS MAP CORRECTLY REPRESENTS A TOPOGRAPHIC SURVEY PERFORMED AUGUST 22-26, 2016, BY ME OR UNDER MY DIRECTION AT THE REQUEST OF ALAN K. BLOOMQUIST, MANAGER STRUCTURES DESIGN, BNSF RAILWAY.

PRELIMINARY

ALLISON K. YOUNGER, REGISTERED PROFESSIONAL LAND SURVEYOR IDAHO REGISTRATION NO. 12724

DAVID EVANS AND ASSOCIATES INC.
908 N. HOWARD ST. SUITE 300
SPOKANE, WA 99201
Phone: 509.252.5900

811 Know what's below. Call before you dig.

DES:	BNSF RAILWAY	SANDPOINT JCT, ID TO EAST ALGOMA, ID
DRAWN: KMD	BRIDGE ENGINEERING KANSAS CITY, KS	BRIDGE NO. 003.90
CHECK: DDHA/AKY		OVER LAKE PEND OREILLE NEAR SANDPOINT, ID
DATE: SEPT. 2016		PIER PLAN & PROFILES
AUTH:	APPROVED:	
LINE SEG: 0045	ASST. DIRECTOR STRUCTURES DESIGN	PLAN NO: 0045-003.900-021 SHEET: 21 OF 24

File Location: \\EDHDCFS0000T19\A400CAD\SHEETS\Sandpoint Bridge\0045-003.900-021.DGN
Date Printed: 9/30/2016 Time Printed: 5:06:32 PM

PIER PLAN & PROFILES

0 5 10
SCALE IN FEET
HORIZONTAL SCALE: 1" = 5'

EAST
TO SANDPOINT JCT. ID

WEST
TO EAST ALGOMA. ID

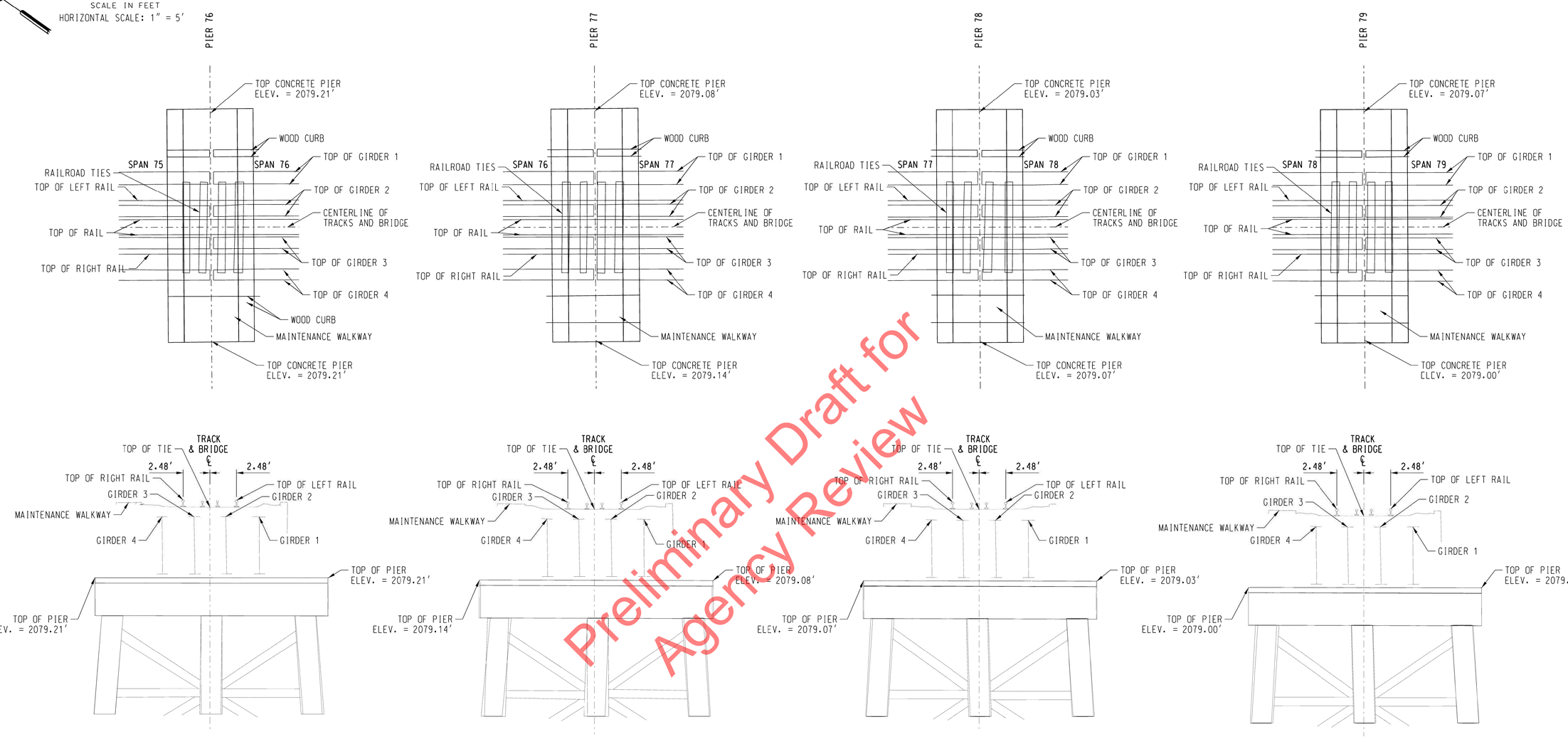

Preliminary Draft for Agency Review

PIER 76
LOOKING RAILROAD EAST

TABLE OF ELEVATIONS			
LOCATION	TOP LEFT RAIL	TOP OF TIE	TOP RIGHT RAIL
ELEVATION	2086.41'	2085.77'	2086.44'

PIER 77
LOOKING RAILROAD EAST

TABLE OF ELEVATIONS			
LOCATION	TOP LEFT RAIL	TOP OF TIE	TOP RIGHT RAIL
ELEVATION	2086.36'	2085.69'	2086.36'

PIER 78
LOOKING RAILROAD EAST

TABLE OF ELEVATIONS			
LOCATION	TOP LEFT RAIL	TOP OF TIE	TOP RIGHT RAIL
ELEVATION	2086.39'	2085.69'	2086.37'

PIER 79
LOOKING RAILROAD EAST

TABLE OF ELEVATIONS			
LOCATION	TOP LEFT RAIL	TOP OF TIE	TOP RIGHT RAIL
ELEVATION	2086.33'	2085.68'	2086.35'

DAVID EVANS AND ASSOCIATES INC.
908 N. HOWARD ST. SUITE 300
SPOKANE, WA 99201
Phone: 509.252.5900

811 Know what's below. Call before you dig.

NOTES:
1.) LEFT AND RIGHT DIRECTIONS ARE BASED ON A WEST ORIENTATION LOOKING UPSTATION OF RAILROAD ALONG CENTERLINE OF TRACK.

2.) STATIONING VALUES REFLECT ASSUMPTION THAT THE EAST ABUTMENT INSIDE FACE EQUALS 10+00 AT THE TRACK CENTERLINE.

SURVEYOR'S CERTIFICATION

THIS MAP CORRECTLY REPRESENTS A TOPOGRAPHIC SURVEY PERFORMED AUGUST 22-26, 2016, BY ME OR UNDER MY DIRECTION AT THE REQUEST OF ALAN K. BLOOMQUIST, MANAGER STRUCTURES DESIGN, BNSF RAILWAY.

PRELIMINARY

ALLISON K. YOUNGER, REGISTERED PROFESSIONAL LAND SURVEYOR IDAHO REGISTRATION NO. 12724

DES:	
DRAWN: KMD	
CHECK: DDHA/AKY	
DATE: SEPT. 2016	
AUTH:	
LINE SEG: 0045	

BNSF RAILWAY
BRIDGE ENGINEERING KANSAS CITY, KS
APPROVED:
ASST. DIRECTOR STRUCTURES DESIGN

SANDPOINT JCT. ID TO EAST ALGOMA, ID
BRIDGE NO. 003.90
OVER LAKE PEND OREILLE NEAR SANDPOINT, ID
PIER PLAN & PROFILES

PLAN NO: 0045-003.900-022 SHEET: 22 OF 24

PIER PLAN & PROFILES

0 5 10
SCALE IN FEET
HORIZONTAL SCALE: 1" = 5'

EAST
TO SANDPOINT JCT, ID

WEST
TO EAST ALGOMA, ID

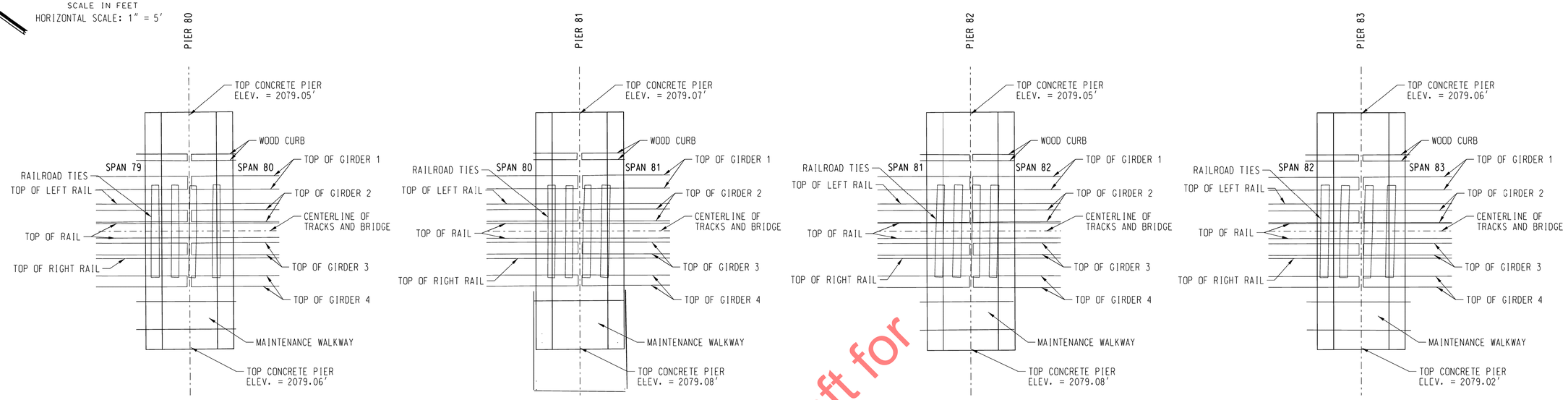

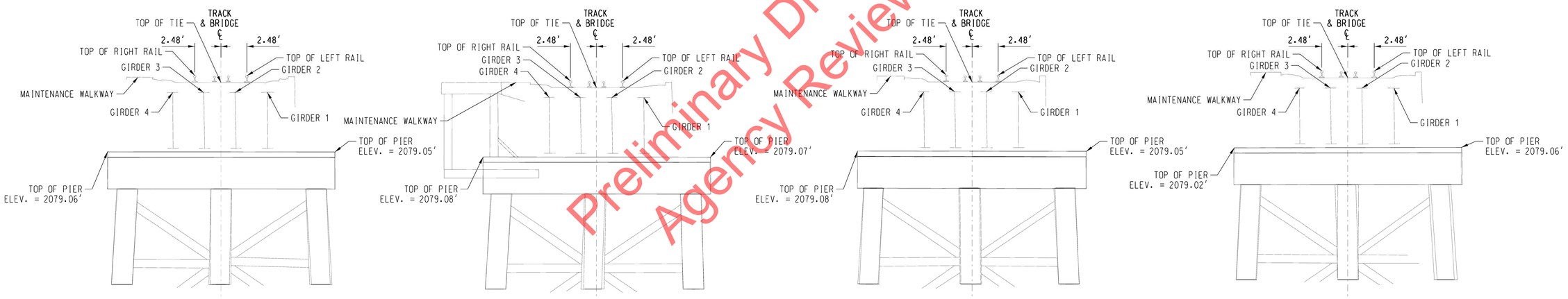

PIER 80
LOOKING RAILROAD EAST

TABLE OF ELEVATIONS			
LOCATION	TOP LEFT RAIL	TOP OF TIE	TOP RIGHT RAIL
ELEVATION	2086.32'	2085.67'	2086.34'

PIER 81
LOOKING RAILROAD EAST

TABLE OF ELEVATIONS			
LOCATION	TOP LEFT RAIL	TOP OF TIE	TOP RIGHT RAIL
ELEVATION	2086.31'	2085.67'	2086.33'

PIER 82
LOOKING RAILROAD EAST

TABLE OF ELEVATIONS			
LOCATION	TOP LEFT RAIL	TOP OF TIE	TOP RIGHT RAIL
ELEVATION	2086.31'	2085.66'	2086.32'

PIER 83
LOOKING RAILROAD EAST

TABLE OF ELEVATIONS			
LOCATION	TOP LEFT RAIL	TOP OF TIE	TOP RIGHT RAIL
ELEVATION	2086.33'	2085.68'	2086.35'

Preliminary Draft for Agency Review

DAVID EVANS AND ASSOCIATES INC.
908 N. HOWARD ST. SUITE 300
SPOKANE, WA 99201
Phone: 509.252.5900

811 Know what's below. Call before you dig.

NOTES:
1.) LEFT AND RIGHT DIRECTIONS ARE BASED ON A WEST ORIENTATION LOOKING UPSTATION OF RAILROAD ALONG CENTERLINE OF TRACK.

2.) STATIONING VALUES REFLECT ASSUMPTION THAT THE EAST ABUTMENT INSIDE FACE EQUALS 10+00 AT THE TRACK CENTERLINE.

SURVEYOR'S CERTIFICATION

THIS MAP CORRECTLY REPRESENTS A TOPOGRAPHIC SURVEY PERFORMED AUGUST 22-26, 2016, BY ME OR UNDER MY DIRECTION AT THE REQUEST OF ALAN K. BLOOMQUIST, MANAGER STRUCTURES DESIGN, BNSF RAILWAY.

PRELIMINARY

ALLISON K. YOUNGER, REGISTERED PROFESSIONAL LAND SURVEYOR IDAHO REGISTRATION NO. 12724

DES:	
DRAWN:	KMD
CHECK:	DDHA/AKY
DATE:	SEPT. 2016
AUTH:	
LINE SEG:	0045

BNSF RAILWAY
BRIDGE ENGINEERING KANSAS CITY, KS
APPROVED:
ASST. DIRECTOR STRUCTURES DESIGN

SANDPOINT JCT, ID TO EAST ALGOMA, ID
BRIDGE NO. 003.90
OVER LAKE PEND OREILLE NEAR SANDPOINT, ID
PIER PLAN & PROFILES

PLAN NO: 0045-003.900-023 SHEET: 23 OF 24

PIER PLAN & PROFILES

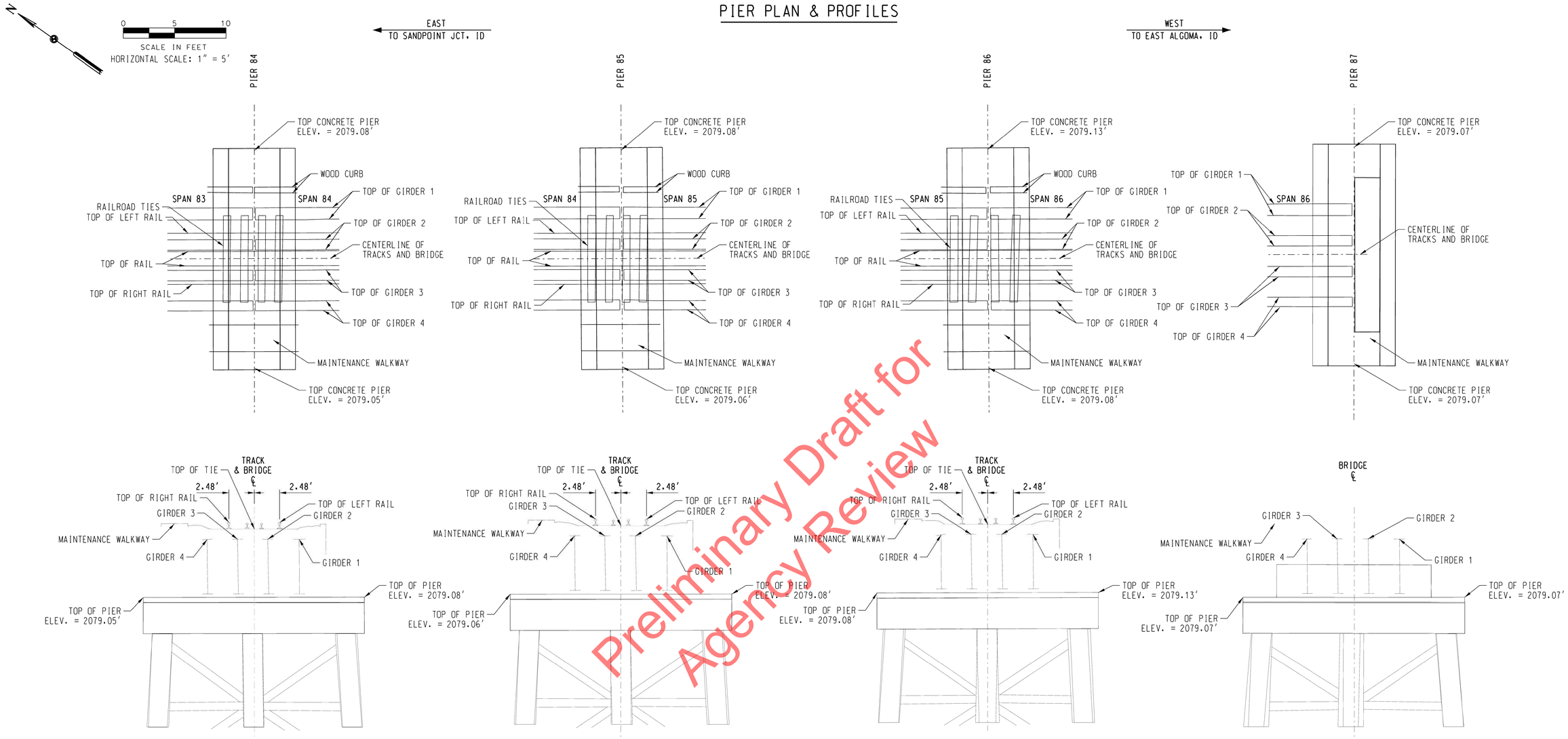

PIER 84
LOOKING RAILROAD EAST

TABLE OF ELEVATIONS			
LOCATION	TOP LEFT RAIL	TOP OF TIE	TOP RIGHT RAIL
ELEVATION	2086.36'	2085.72'	2086.38'

PIER 85
LOOKING RAILROAD EAST

TABLE OF ELEVATIONS			
LOCATION	TOP LEFT RAIL	TOP OF TIE	TOP RIGHT RAIL
ELEVATION	2086.36'	2085.73'	2086.39'

PIER 86
LOOKING RAILROAD EAST

TABLE OF ELEVATIONS			
LOCATION	TOP LEFT RAIL	TOP OF TIE	TOP RIGHT RAIL
ELEVATION	2086.40'	2085.77'	2086.42'

PIER 87
LOOKING RAILROAD EAST

Preliminary Draft for Agency Review

NOTES:
1.) LEFT AND RIGHT DIRECTIONS ARE BASED ON A WEST ORIENTATION LOOKING UPSTATION OF RAILROAD ALONG CENTERLINE OF TRACK.
2.) STATIONING VALUES REFLECT ASSUMPTION THAT THE EAST ABUTMENT INSIDE FACE EQUALS 10+00 AT THE TRACK CENTERLINE.

SURVEYOR'S CERTIFICATION

THIS MAP CORRECTLY REPRESENTS A TOPOGRAPHIC SURVEY PERFORMED AUGUST 22-26, 2016, BY ME OR UNDER MY DIRECTION AT THE REQUEST OF ALAN K. BLOOMQUIST, MANAGER STRUCTURES DESIGN, BNSF RAILWAY.

PRELIMINARY

ALLISON K. YOUNGER, REGISTERED PROFESSIONAL LAND SURVEYOR IDAHO REGISTRATION NO. 12724

DAVID EVANS AND ASSOCIATES INC.
908 N. HOWARD ST. SUITE 300
SPOKANE, WA 99201
Phone: 509.252.5900

811 Know what's below. Call before you dig.

DES:	
DRAWN:	KMD
CHECK:	DDHA/AKY
DATE:	SEPT. 2016
AUTH:	
LINE SEG:	0045

BNSF RAILWAY
BRIDGE ENGINEERING KANSAS CITY, KS
APPROVED:
ASST. DIRECTOR STRUCTURES DESIGN

SANDPOINT JCT, ID TO EAST ALGOMA, ID
BRIDGE NO. 003.90
OVER LAKE PEND OREILLE NEAR SANDPOINT, ID
PIER PLAN & PROFILES

PLAN NO: 0045-003.900-024 SHEET: 24 OF 24

Date Printed: 9/30/2016 Time Printed: 5:08:01 PM

Preliminary Draft for Agency Review

Attachment F: Proposed Bridge Plans

USCG0011113/27

GENERAL NOTES:

SPECIFICATIONS

1. STRUCTURAL: 2016 A.R.E.M.A. MANUAL FOR RAILWAY ENGINEERING.

2. WELDING: IN ACCORDANCE WITH CURRENT A.W.S. BRIDGE WELDING CODE D1.5 AND AREMA MANUAL CHAPTER 15 FOR RAILWAY ENGINEERING. ALL WELD METAL MUST BE EQUIVALENT TO THE BASE METAL IN STRENGTH, CORROSION RESISTANCE, AND WEATHERED APPEARANCE.

LOADINGS

1. LIVE LOAD: A.R.E.M.A. COOPER E-80 WITH DIESEL IMPACT FOR ROLLING EQUIPMENT WITHOUT HAMMER BLOW FOR BALLAST DECK.

2. OTHER LOADS AND COMBINATIONS: AS PER A.R.E.M.A. MANUAL FOR RAILWAY ENGINEERING.

DIMENSIONS

1. ALL DIMENSIONS ARE MEASURED AT 50°F AND ARE HORIZONTAL.

STRUCTURAL STEEL

GENERAL:

1. FABRICATION AND WORKMANSHIP SHALL CONFORM TO THE 2016 A.R.E.M.A. MANUAL CHAPTER 15 FOR RAILWAY ENGINEERING.

2. ALL STRUCTURAL STEEL SHALL CONFORM TO A.S.T.M. A709, GRADE 50 AND SHALL BE PROVIDED WITH I-BEAMS.

3. FASTENERS SHALL BE A.S.T.M. F3125 GRADE 325 SLIP CRITICAL CLASS B HEAVY HEX HIGH STRENGTH BOLTS, TYPE 1, GALVANIZED. BOLTS $\frac{7}{8}$" DIA., OPEN HOLES $\frac{15}{16}$" DIA. UNLESS OTHERWISE NOTED. BOLTED CONNECTIONS SHALL USE GALVANIZED A.S.T.M. A563, GRADE DH, HEAVY HEX NUTS AND OVERSIZED A.S.T.M. F436 HARDENED STEEL GALVANIZED WASHERS FOR HIGH STRENGTH BOLTS UNDER THE TURNED ELEMENT. HIGH STRENGTH BOLTS SHALL BE TIGHTENED BY THE "TURN-OF-NUT" METHOD TO OBTAIN PROPER BOLT TENSION.

4. WELD BEARING PLATE TO SOLE PLATE BEFORE BEAM IS LIFTED FOR ERECTION ONTO ELASTOMERIC BEARING PADS.

5. SOLE PLATES SHALL BE FLAT AFTER WELDING, STRAIGHTEN IF NECESSARY.

SHOP NOTES:

1. ALL SURFACES, INCLUDING FAYING SURFACES, OF STRUCTURAL STEEL SHALL BE CLEANED PER STEEL STRUCTURES PAINTING COUNCIL SPECIFICATION SSPC-SP6. PRIMED OR PAINTED SURFACES SHALL BE CLEANED PER STEEL STRUCTURES PAINTING COUNCIL SPECIFICATIONS SSPC-SP10.

2. FOLLOWING FABRICATION, GALVANIZE DECK PLATES, ANCHOR BOLTS (INCL. NUTS AND WASHERS), WT'S, ANGLES, CONNECTION PLATES AND BENT PLATE DIAPHRAGMS PER A.S.T.M. A123/F2329 AS APPLICABLE.

REPAIR OF DAMAGED GALVANIZED SURFACES:

1. DAMAGED GALVANIZED SURFACES SHALL BE THOROUGHLY CLEANED TO REMOVE ALL CONTAMINANTS INCLUDING WELD SLAG, WELD SPATTER AND RUST AND SHALL THEN BE PAINTED WITH TWO COATS OF ZINC DUST - ZINC OXIDE, TYPE I, LINSEED OIL PAINT MEETING FEDERAL SPECIFICATION TT-P-641.

ANCHOR BOLTS:

1. ANCHOR BOLTS FOR THE BEARING DEVICES SHALL CONFORM TO A.S.T.M. F1554, GR. 105, UNLESS OTHERWISE SHOWN ON THE PLANS OR DESCRIBED IN THE CONTRACT SPECIFICATIONS.

SURVEY

1. ELEVATIONS ARE BASED ON SITUATION SURVEY OF BRIDGE 3.9, DATED MAY 5. 2014, BY USKH INC.

2. CONTROL POINTS:

CONTROL POINT #412	CONTROL POINT #413
NORTHING: 2406663.406	NORTHING: 2402479.021
EASTING: 2432663.606	EASTING: 2436089.468
ELEVATION: 2064.375	ELEVATION: 2081.836

CONTROL POINT #412 - SET REBAR WITH CAP NEAR HIGHWAY.

CONTROL POINT #413 - SET REBAR WITH CAP NEAR EXISTING RAILROAD BRIDGE.

EXISTING DIMENSIONS

1. THE CONTRACTOR SHALL VERIFY ALL CONTROLLING FIELD DIMENSIONS PRIOR TO CONSTRUCTION.

STATIONING

1. STATIONING BASED ON PROPOSED TRACK PLAN AND PROFILE SHEETS, FOR MORE INFORMATION SEE CIVIL DRAWINGS.

PERMITTING

1. CONTRACTOR SHALL MAINTAIN COMPLIANCE WITH PERMITTING REQUIREMENTS AS NOTED IN SPECIAL PROVISIONS.

DECK WATERPROOFING

1. THE STEEL BALLAST PAN AND THE TOP SURFACE OF THE DOUBLE VOIDED BOX BEAM SPANS SHALL BE WATERPROOFED WITH A COLD SPRAY-ON WATERPROOFING IN ACCORDANCE WITH 2016 A.R.E.M.A. CHAPTER 8 PART 29.

2. SEE PLAN NO. 0045-0003.900-051 FOR ADDITIONAL WATERPROOFING NOTES.

BEARING PADS

1. ALL MATERIAL AND WORKMANSHIP SHALL BE AS PER THE CURRENT BNSF STANDARD SPECIFICATIONS.

2. BEARING PADS SHALL BE CLEANED IN ACCORDANCE WITH THE MANUFACTURERS RECOMMENDATION AND GLUED TO CONCRETE CAPS WITH AN APPROVED EPOXY ADHESIVE.

PILES

1. IF A PILE ACHIEVES CAPACITY MORE THAN 10 FEET ABOVE ESTIMATED PILE TIP, CONTRACTOR SHALL CONTACT ENGINEER TO VERIFY ACCEPTABILITY OF PILE.

2. HAMMERS MUST BE APPROVED BY SYSTEMS STRUCTURES OFFICE PRIOR TO USE. PILE DRIVING CRITERIA SHALL BE SUPPLIED BY SYSTEM STRUCTURE OFFICES.

3. AFTER PILES ARE DRIVEN, THEY SHALL BE PULLED, IF NECESSARY, AND HELD IN THE PROPER LOCATION AND CUT OFF AT THE PROPER ELEVATION. THEY SHALL CONTINUE BEING HELD UNTIL THE PRECAST CAPS HAVE BEEN SET AND WELDED TO STEEL PIPE PILES.

4. SEE PLAN NO. 0045-0003.900-022 FOR ADDITIONAL PILING NOTES.

5. PILE CAPACITIES AND ESTIMATED LENGTHS BASED ON GEOTECHNICAL MEMO PROVIDED BY McMILLEN JACOBS ASSOCIATES DATED MARCH 27, 2018.

PRECAST CONCRETE

GENERAL:

1. ALL MATERIAL AND WORKMANSHIP SHALL BE AS PER THE CURRENT BNSF STANDARD SPECIFICATIONS.

2. AFTER PRECAST CONCRETE MEMBERS ARE SET, FILL RECESSES AT LIFT ANCHORS WITH CEMENT GROUT TO THE TOP OF SURROUNDING CONCRETE.

CONCRETE:

1. CONCRETE MEMBERS SHALL NOT BE REMOVED FROM THE CASTING BED BEFORE THE CONCRETE REACHES A STRENGTH OF 3500 p.s.i.

2. ALL EXPOSED EDGES OF CONCRETE MEMBERS SHALL BE CHAMFERED $\frac{3}{4}$ INCH.

3. CONCRETE SHALL BE VIBRATED INTERNALLY DURING PLACEMENT TO PROVIDE THOROUGH CONSOLIDATION AND COMPACTION. CARE SHALL BE TAKEN TO AVOID DISPLACEMENT OF EMBEDDED ITEMS.

4. ANCHOR BOLT BLOCKOUTS SHALL BE FORMED WITH 4" I.D. CORRUGATED PRESTRESSING DUCT WHICH SHALL REMAIN IN THE CONCRETE.

5. SEE PLAN NO. 0045-0003.900-042 AND 0045-0003.900-048 FOR ADDITIONAL PRECAST NOTES.

6. MINIMUM COMPRESSIVE STRENGTH OF PRECAST NON-PRESTRESSED CONCRETE SHALL BE 4,000 p.s.i.

6. ESTIMATED WEIGHT OF PRECAST COMPONENTS PROVIDED THROUGHOUT ARE BASED ON NOMINAL DIMENSIONS AND A CONCRETE UNIT WEIGHT OF 150 POUNDS PER CUBIC FOOT. WEIGHTS SHOWN INCLUDE ESTIMATED WEIGHTS OF EMBED PLATES.

REINFORCEMENT:

1. MILD STEEL REINFORCEMENT SHALL MEET THE REQUIREMENTS OF THE CURRENT A.S.T.M. DESIGNATION: A615 OR A706, GRADE 60.

2. FABRICATION OF REINFORCEMENT AND STANDARD HOOK DIMENSIONS SHALL BE IN ACCORDANCE WITH CHAPTER 7 OF THE CURRENT C.R.S.I. "MANUAL OF STANDARD PRACTICE".

3. REINFORCING STEEL MATERIAL FABRICATION AND INSTALLATION SHALL BE IN ACCORDANCE WITH THE REQUIREMENTS OF THE CURRENT BNSF SPECIFICATIONS.

4. TACK WELDING OF REINFORCEMENT IS PROHIBITED.

5. STEEL REINFORCEMENT MAY BE ADJUSTED AS REQUIRED TO CLEAR EMBEDDED ITEMS.

6. BAR MARK DESIGNATES BAR SIZE AND LENGTH. I.E. MARK 859-6 SIGNIFIES #8 BAR 59'-6" IN LENGTH.

7. MINIMUM CONCRETE COVER ON REINFORCEMENT SHALL BE TWO (2) INCHES UNLESS NOTED OTHERWISE.

STEEL:

1. FABRICATION AND ARW WELDING OF STRUCTURAL STEEL AND HANDRAIL PANELS SHALL BE ACCORDANCE WITH CHAPTER 15, PART 3 OF THE CURRENT A.R.E.M.A. MANUAL FOR RAILWAY ENGINEERING. MIG WELDING SHALL BE USED ON HANDRAIL PANELS.

2. MATERIAL: STRUCTURAL BARS, PLATES AND ANGLES SHALL CONFORM TO A.S.T.M. A36.

3. STANDARD BLACK PIPE SHALL CONFORM TO A.S.T.M. A53, UNCOATED PIPE SHALL BE USED.

4. SHEAR CONNECTOR STUDS SHALL BE AUTOMATICALLY END WELDED WITH COMPLETE FUSION IN ACCORDANCE WITH SECTION 7 OF THE CURRENT A.W.S. STRUCTURAL WELDING CODE D1.1.

5. SHEAR CONNECTOR STUDS SHALL CONFORM TO A.S.T.M. A108 GRADE 1020.

6. HANDRAIL PANELS SHALL BE ERECTED PLUMB AND IN LINE.

7. DEBURR ALL EDGES ON STEEL PLATES.

8. GALVANIZING SHALL CONFORM TO A.S.T.M. A123, PIECES REQUIRING GALVANIZING ARE NOTED IN THESE PLANS.

9. AFTER GALVANIZING, ALL ELEMENTS SHALL BE FREE OF FINS, ABRASIONS, ROUGH OR SHARP EDGES AND OTHER SURFACE DEFECTS.

10. D-RINGS SHALL BE 3" I.D., MADE OF STEEL FOR HEAVY-DUTY USE, PROVIDED WITH WELD-ON BRACKET AND HAVE A MINIMUM SAFE WORKING LOAD OF 1,000 LBS. COMPONENTS REQUIRING D-RINGS ARE SHOWN IN THESE PLANS.

PATCHING:

1. PATCHING OR REPAIR OF SPALLED OR CHIPPED PRECAST CONCRETE MEMBERS SHALL BE DONE USING CONPATCH V/O MORTAR, MIXED AND INSTALLED IN ACCORDANCE WITH MANUFACTURER'S WRITTEN INSTRUCTIONS.

Preliminary Draft for Agency Review

REFERENCES

NO.	PLAN NO.	SHEET NO.	DESCRIPTION
1	0000-1000-03	3 OF 15	CONCRETE COMPONENTS
2	0000-1000-04	4 OF 15	HANDRAIL LAYOUT
3	0000-1000-05	5 OF 15	GENERAL INFORMATION
4	0000-1213-01	1 OF 2	42" DOUBLE CELL BOX BEAM
5	0000-1213-02	2 OF 2	42" DOUBLE CELL BOX BEAM PRESTRESSING STRAND PATTERN
6	0000-1220-02	2 OF 2	24" CURB
7	0000-1910-03	3 OF 7	EMBED PLTES
8	0000-1910-04	4 OF 7	DECK AND CURB PLATES
9	0000-1910-05	5 OF 7	BRACKET DETAILS
10	0000-1910-06	6 OF 7	CURB AND WALK
11	0000-1910-07	7 OF 7	REBAR BENDING DIAGRAM

VICINITY MAP
NOT TO SCALE

LIST OF DRAWINGS - BR. 3.9

PLAN NO.	TITLE
0045-0003.900-001	GENERAL NOTES & LIST OF SHEETS
0045-0003.900-002	GENERAL NOTES & QUANTITIES
0045-0003.900-003	GENERAL PLAN & ELEVATION (1 OF 18)
0045-0003.900-004	GENERAL PLAN & ELEVATION (2 OF 18)
0045-0003.900-005	GENERAL PLAN & ELEVATION (3 OF 18)
0045-0003.900-006	GENERAL PLAN & ELEVATION (4 OF 18)
0045-0003.900-007	GENERAL PLAN & ELEVATION (5 OF 18)
0045-0003.900-008	GENERAL PLAN & ELEVATION (6 OF 18)
0045-0003.900-009	GENERAL PLAN & ELEVATION (7 OF 18)
0045-0003.900-010	GENERAL PLAN & ELEVATION (8 OF 18)
0045-0003.900-011	GENERAL PLAN & ELEVATION (9 OF 18)
0045-0003.900-012	GENERAL PLAN & ELEVATION (10 OF 18)
0045-0003.900-013	GENERAL PLAN & ELEVATION (11 OF 18)
0045-0003.900-014	GENERAL PLAN & ELEVATION (12 OF 18)
0045-0003.900-015	GENERAL PLAN & ELEVATION (13 OF 18)
0045-0003.900-016	GENERAL PLAN & ELEVATION (14 OF 18)
0045-0003.900-017	GENERAL PLAN & ELEVATION (15 OF 18)
0045-0003.900-018	GENERAL PLAN & ELEVATION (16 OF 18)
0045-0003.900-019	GENERAL PLAN & ELEVATION (17 OF 18)
0045-0003.900-020	GENERAL PLAN & ELEVATION (18 OF 18)
0045-0003.900-021	PILE LAYOUT PLAN & DETAILS
0045-0003.900-022	TABLE OF ELEVATIONS & PILE NOTES
0045-0003.900-023	TYPICAL SECTION - ABUT. #1
0045-0003.900-024	TYPICAL SECTION - PIER #2
0045-0003.900-025	TYPICAL SECTION - PIERS #3 THRU #31, #36 THRU #38 & #43 THRU #49
0045-0003.900-026	TYPICAL SECTION - PIERS #32, #35, #39 & #42
0045-0003.900-027	TYPICAL SECTION - PIERS #33, #34, #40 & #41
0045-0003.900-028	TYPICAL SECTION - ABUT. #50
0045-0003.900-029	P/C CONC. ABUTMENT CAP - SA3.9-1 (1 OF 2)
0045-0003.900-030	P/C CONC. ABUTMENT CAP - SA3.9-1 (2 OF 2)
0045-0003.900-031	C.I.P. CONC. ABUTMENT #50 (1 OF 2)
0045-0003.900-032	C.I.P. CONC. ABUTMENT #50 (2 OF 2)
0045-0003.900-033	P/C CONC. DOUBLE BENT CAP DETAILS (1 OF 2)
0045-0003.900-034	P/C CONC. DOUBLE BENT CAP DETAILS (2 OF 2)
0045-0003.900-035	P/C CONC. WINGWALL - SW3.9-1
0045-0003.900-036	P/C CONC. BEARING BLOCK - SBB3.9-1
0045-0003.900-037	P/C CONC. BEARING BLOCK - SBB3.9-2
0045-0003.900-038	63" P/S CONC. I-BEAM FRAMING PLAN
0045-0003.900-039	63" P/S CONC. I-BEAM DETAILS (1 OF 4)
0045-0003.900-040	63" P/S CONC. I-BEAM DETAILS (2 OF 4)
0045-0003.900-041	63" P/S CONC. I-BEAM DETAILS (3 OF 4)
0045-0003.900-042	63" P/S CONC. I-BEAM DETAILS (4 OF 4)
0045-0003.900-043	C.I.P. CONC. DECK AND DETAILS - 75'-7" SPAN
0045-0003.900-044	72" P/S CONC. I-BEAM FRAMING PLAN
0045-0003.900-045	72" P/S CONC. I-BEAM DETAILS (1 OF 4)
0045-0003.900-046	72" P/S CONC. I-BEAM DETAILS (2 OF 4)
0045-0003.900-047	72" P/S CONC. I-BEAM DETAILS (3 OF 4)
0045-0003.900-048	72" P/S CONC. I-BEAM DETAILS (4 OF 4)
0045-0003.900-049	C.I.P. CONC. DECK AND DETAILS - 103'-8" SPAN
0045-0003.900-050	P/S I-BEAM BEARING DETAILS
0045-0003.900-051	BRIDGE DECK WATERPROOFING
0045-0003.900-052	HANDRAIL PANEL DETAILS (1 OF 3)
0045-0003.900-053	HANDRAIL PANEL DETAILS (2 OF 3)
0045-0003.900-054	HANDRAIL PANEL DETAILS (3 OF 3)
0045-0003.900-055	UTILITY SUPPORT DETAILS - 42" DOUBLE VOIDED BOX BEAM
0045-0003.900-056	BRIDGE DECK DRAINAGE DETAILS

90% SUBMITTAL
NOT FOR CONSTRUCTION
AUGUST 24, 2018

HANSON
Hanson Professional Services Inc.

DES:	TJH
DRAWN:	GTJ
CHECK:	MAF
DATE:	AUG 2018
AUTH:	XXX-XXXX
LINE SEG:	0045

BNSF RAILWAY
BRIDGE ENGINEERING KANSAS CITY, KS
APPROVED:
ASST. DIRECTOR STRUCTURES DESIGN

SANDPOINT JCT. TO LAKESIDE JCT.
BRIDGE NUMBER 3.9
OVER LAKE PEND OREILLE NEAR SANDPOINT, ID
GENERAL NOTES & LIST OF SHEETS

PLAN NO: 0045-0003.900-001 SHEET: 01 OF 56

File Location: I:\14jobs\14R0057\CAD\Struct\Sheet\0003900001.dgn
Date Printed: 8/30/2018 Time Printed: 10:35:51 AM

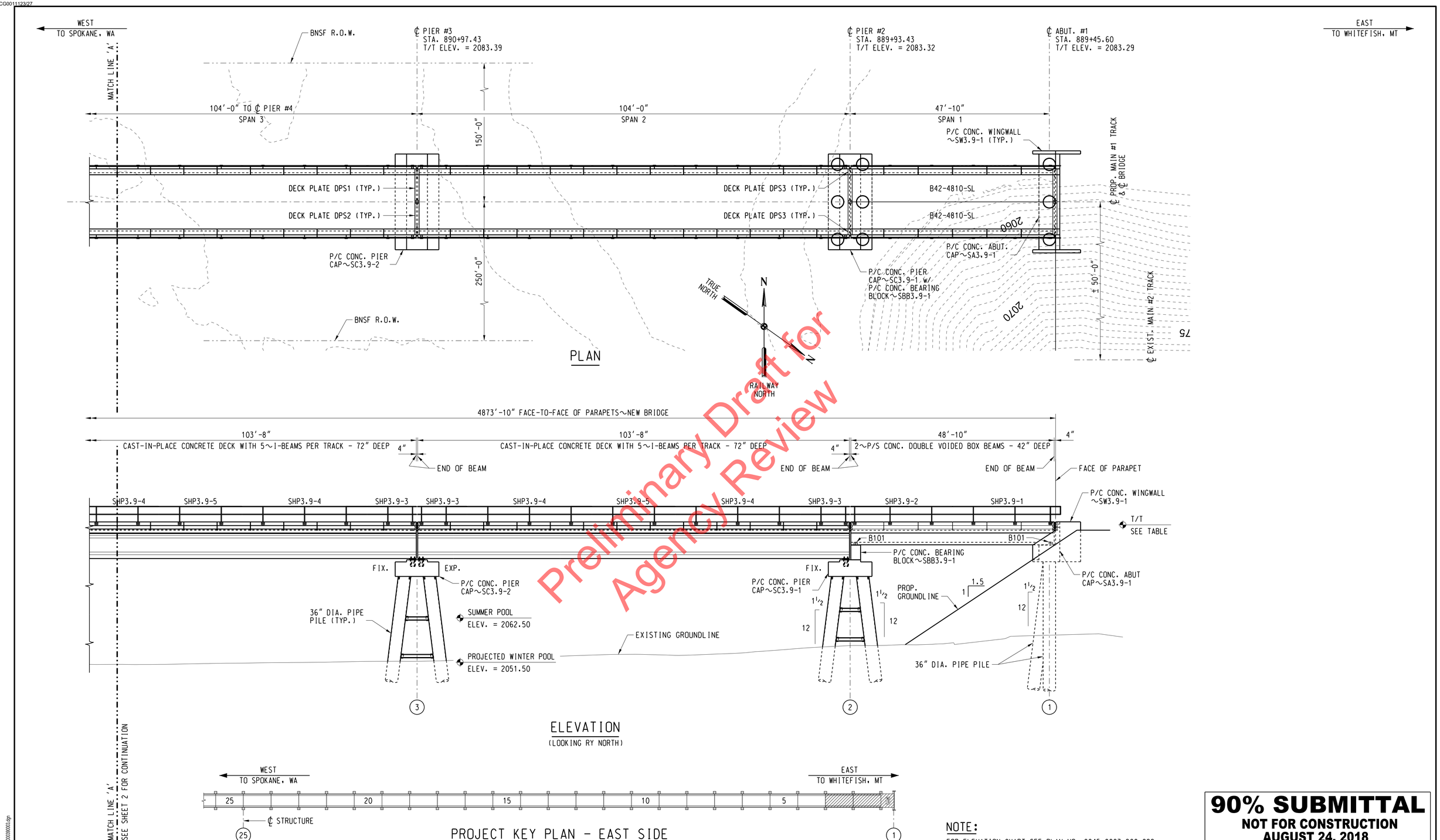

Preliminary Draft for Agency Review

NOTE:
FOR ELEVATION CHART SEE PLAN NO. 0045-0003.900-022

90% SUBMITTAL
NOT FOR CONSTRUCTION
AUGUST 24, 2018

DES:	TJH
DRAWN:	GTJ
CHECK:	MAF
DATE:	AUG 2018
AUTH:	XXX-XXXX
LINE SEG:	0045

BNSF RAILWAY
BRIDGE ENGINEERING KANSAS CITY, KS
APPROVED:
ASST. DIRECTOR STRUCTURES DESIGN

SANDPOINT JCT. TO LAKESIDE JCT.
BRIDGE NUMBER 3.9
OVER LAKE PEND OREILLE NEAR SANDPOINT, ID
GENERAL PLAN & ELEVATION (1 OF 18)

PLAN NO: 0045-0003.900-003 SHEET: 03 OF 56

HANSON
Hanson Professional Services Inc.

File Location: I:\14jobs\14R0057\CAD\Struct\Sheet\00039003.dgn
Date Printed: 8/30/2018 Time Printed: 10:35:56 AM

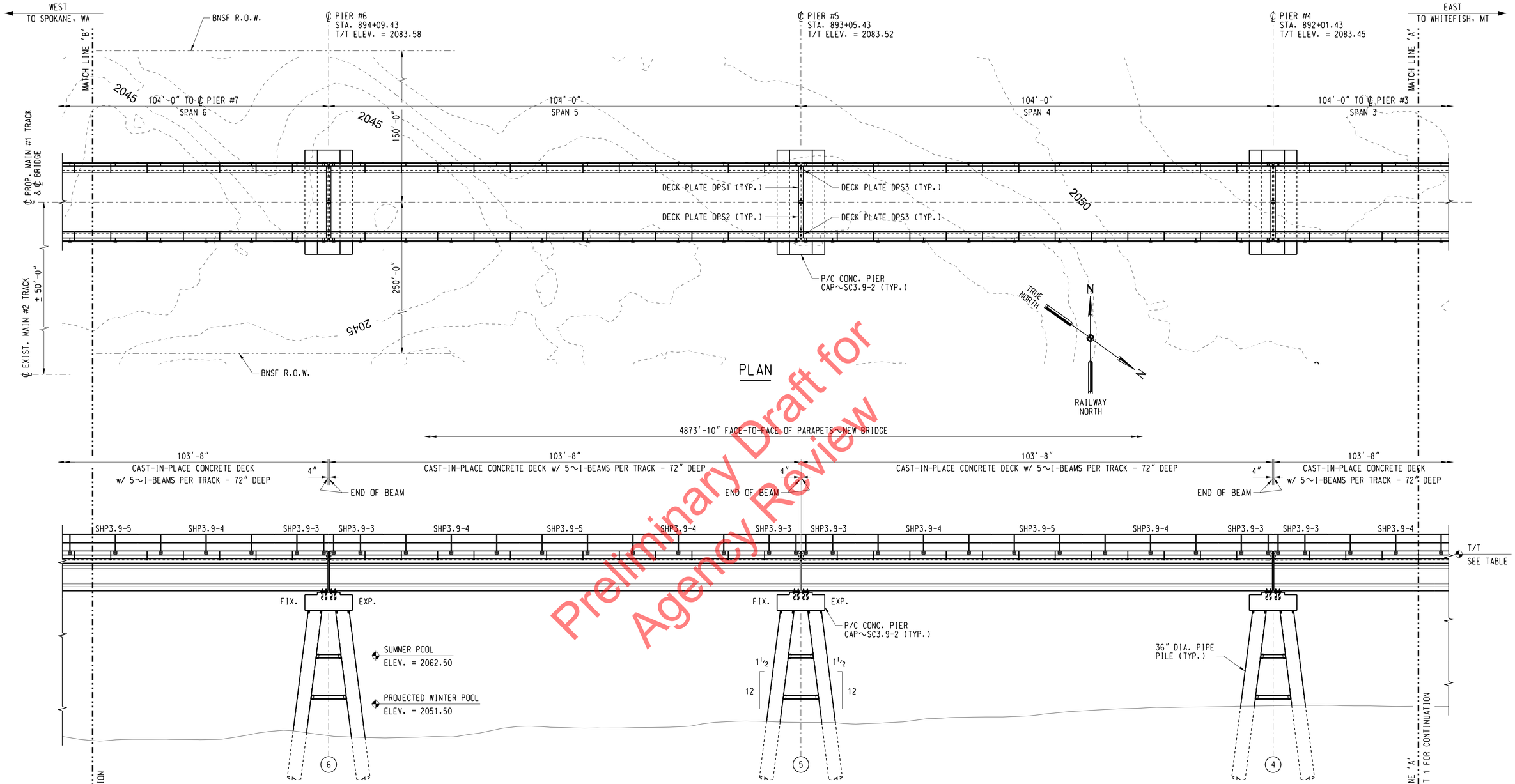

Preliminary Draft for Agency Review

90% SUBMITTAL
NOT FOR CONSTRUCTION
AUGUST 24, 2018

NOTE:
FOR ELEVATION CHART SEE PLAN NO. 0045-0003.900-022

DES:	TJH
DRAWN:	GTJ
CHECK:	MAF
DATE:	AUG 2018
AUTH:	XXX-XXXX
LINE SEG:	0045

BNSF RAILWAY
BRIDGE ENGINEERING KANSAS CITY, KS
APPROVED:
ASST. DIRECTOR STRUCTURES DESIGN

SANDPOINT JCT. TO LAKESIDE JCT.
BRIDGE NUMBER 3.9
OVER LAKE PEND OREILLE NEAR SANDPOINT, ID
GENERAL PLAN & ELEVATION (2 OF 18)

PLAN NO: 0045-0003.900-004 SHEET: 04 OF 56

HANSON
Hanson Professional Services Inc.

File Location: I:\14pdx\14R0057\CAD\Struct\Sheet\0003900004.dgn
Date Printed: 8/30/2018 Time Printed: 10:35:57 AM

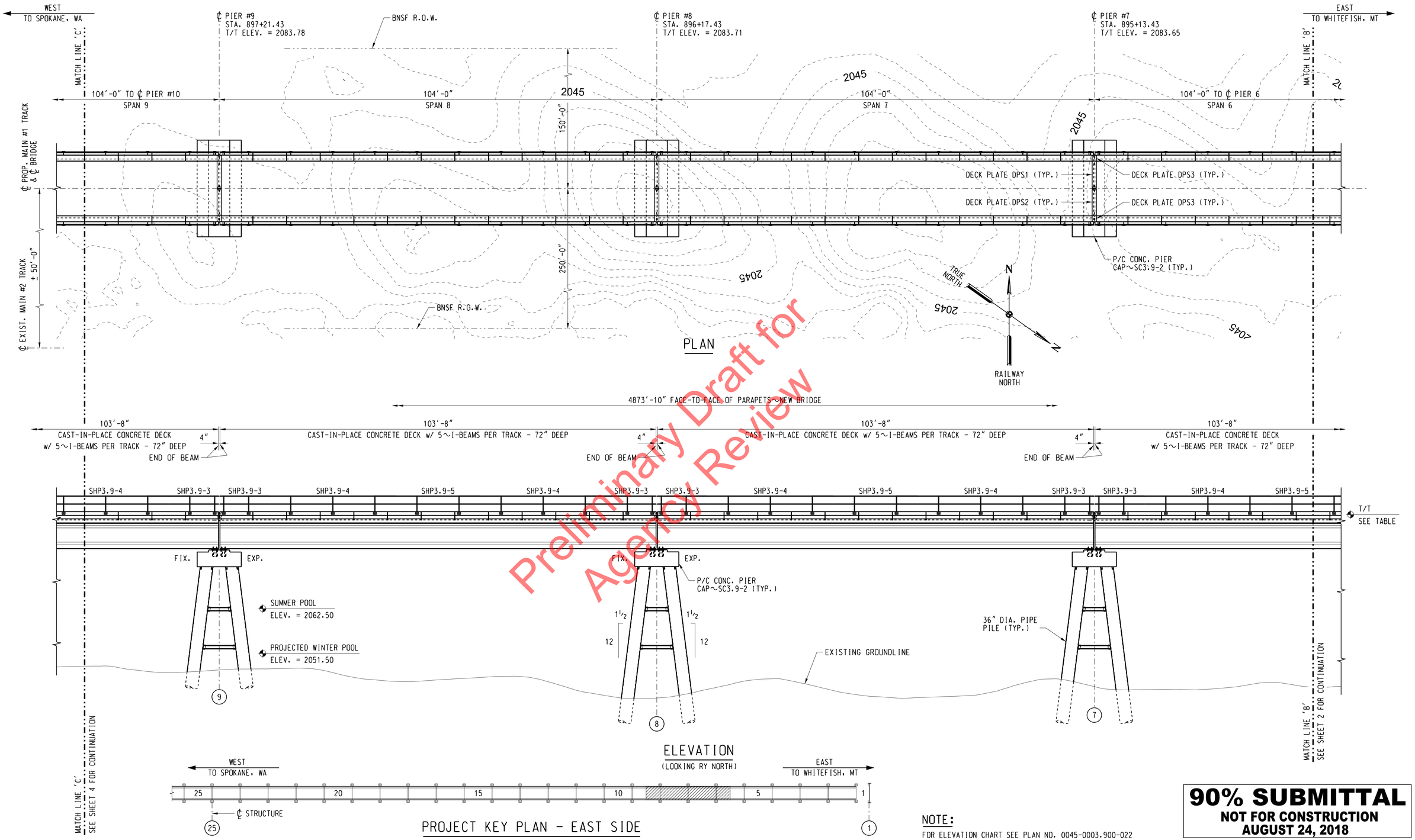

Preliminary Draft for Agency Review

90% SUBMITTAL
NOT FOR CONSTRUCTION
AUGUST 24, 2018

NOTE:
FOR ELEVATION CHART SEE PLAN NO. 0045-0003.900-022

DES:	TJH
DRAWN:	GTJ
CHECK:	MAF
DATE:	AUG 2018
AUTH:	XXX-XXXX
LINE SEG:	0045

BNSF RAILWAY
BRIDGE ENGINEERING KANSAS CITY, KS
APPROVED:
ASST. DIRECTOR STRUCTURES DESIGN

SANDPOINT JCT. TO LAKESIDE JCT.
BRIDGE NUMBER 3.9
OVER LAKE PEND OREILLE NEAR SANDPOINT, ID
GENERAL PLAN & ELEVATION (3 OF 18)

PLAN NO: 0045-0003.900-005 | SHEET: 05 OF 56

HANSON
Hanson Professional Services Inc.

USCG0011153/27

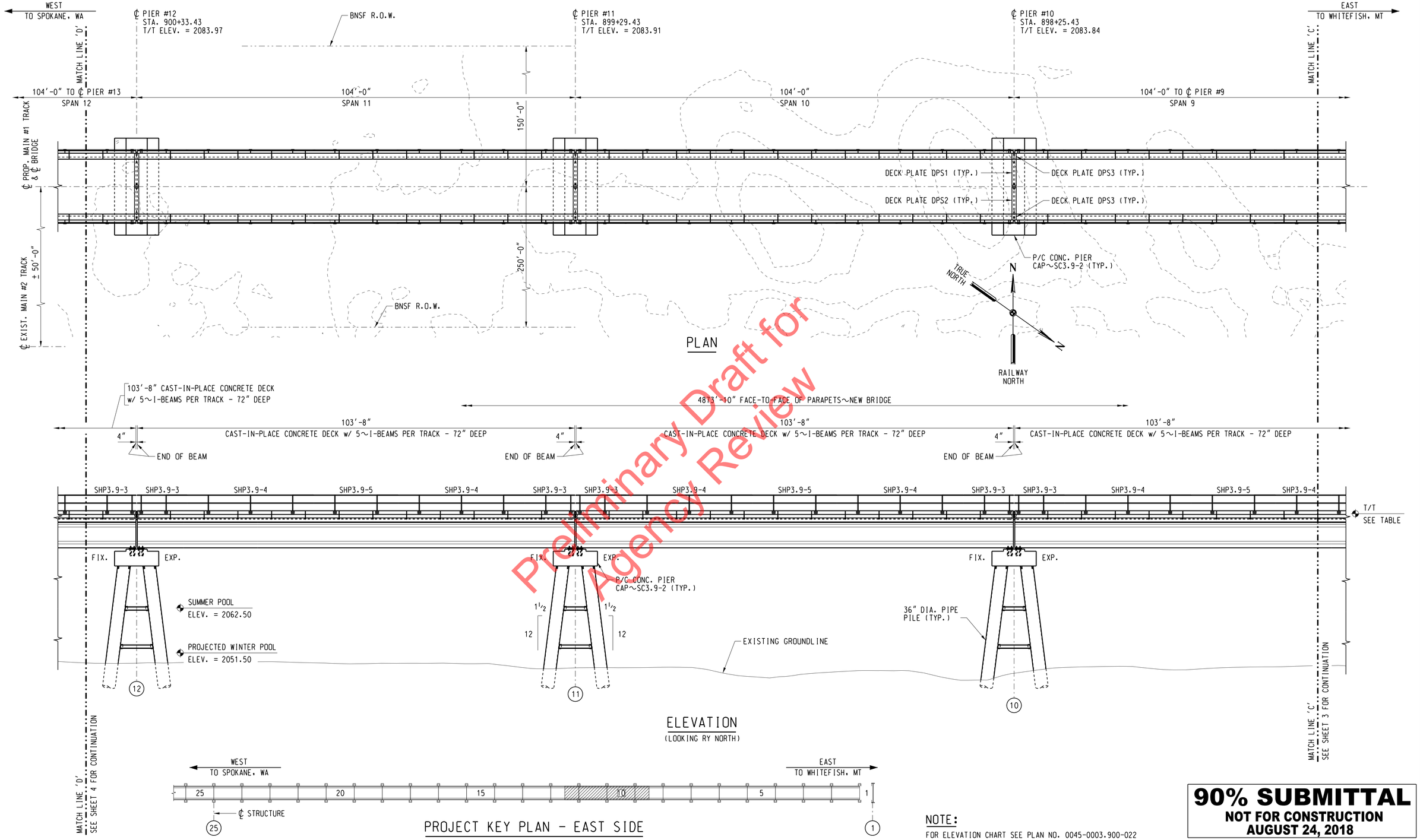

Preliminary Draft for Agency Review

90% SUBMITTAL
NOT FOR CONSTRUCTION
AUGUST 24, 2018

NOTE:
FOR ELEVATION CHART SEE PLAN NO. 0045-0003.900-022

DES:	TJH
DRAWN:	GTJ
CHECK:	MAF
DATE:	AUG 2018
AUTH:	XXX-XXXX
LINE SEG:	0045

BNSF RAILWAY
BRIDGE ENGINEERING KANSAS CITY, KS
APPROVED:
ASST. DIRECTOR STRUCTURES DESIGN

SANDPOINT JCT. TO LAKESIDE JCT.
BRIDGE NUMBER 3.9
OVER LAKE PEND OREILLE NEAR SANDPOINT, ID
GENERAL PLAN & ELEVATION (4 OF 18)

PLAN NO: 0045-0003.900-006 SHEET: 06 OF 56

HANSON
Hanson Professional Services Inc.

File Location: I:\14jobs\14R0057\CAD\Struct\Sheet\00039006.dgn
Date Printed: 8/30/2018 Time Printed: 10:36:01 AM

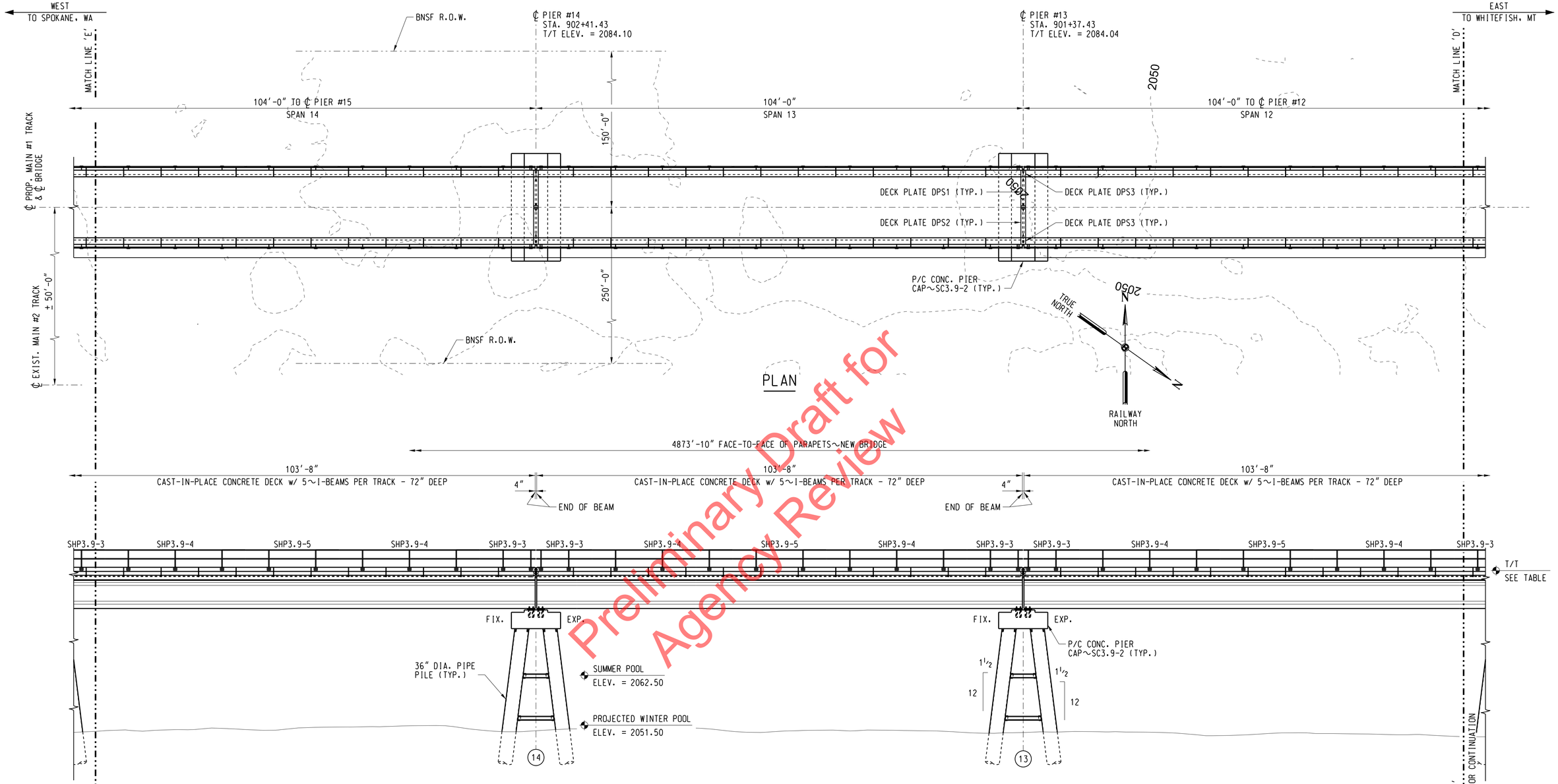

Preliminary Draft for Agency Review

NOTE:
FOR ELEVATION CHART SEE PLAN NO. 0045-0003.900-022

90% SUBMITTAL
NOT FOR CONSTRUCTION
AUGUST 24, 2018

DES:	TJH
DRAWN:	GTJ
CHECK:	MAF
DATE:	AUG 2018
AUTH:	XXX-XXXX
LINE SEG:	0045

BNSF RAILWAY
BRIDGE ENGINEERING KANSAS CITY, KS
APPROVED:
ASST. DIRECTOR STRUCTURES DESIGN

SANDPOINT JCT. TO LAKESIDE JCT.
BRIDGE NUMBER 3.9
OVER LAKE PEND OREILLE NEAR SANDPOINT, ID
GENERAL PLAN & ELEVATION (5 OF 18)

PLAN NO: 0045-0003.900-007 SHEET: 07 OF 56

HANSON
Hanson Professional Services Inc.

File Location: I:\14jobs\14R0057\CAD\Struct\Sheet\00039007.dgn
Date Printed: 8/30/2018 Time Printed: 10:36:02 AM

USCG0011173/27

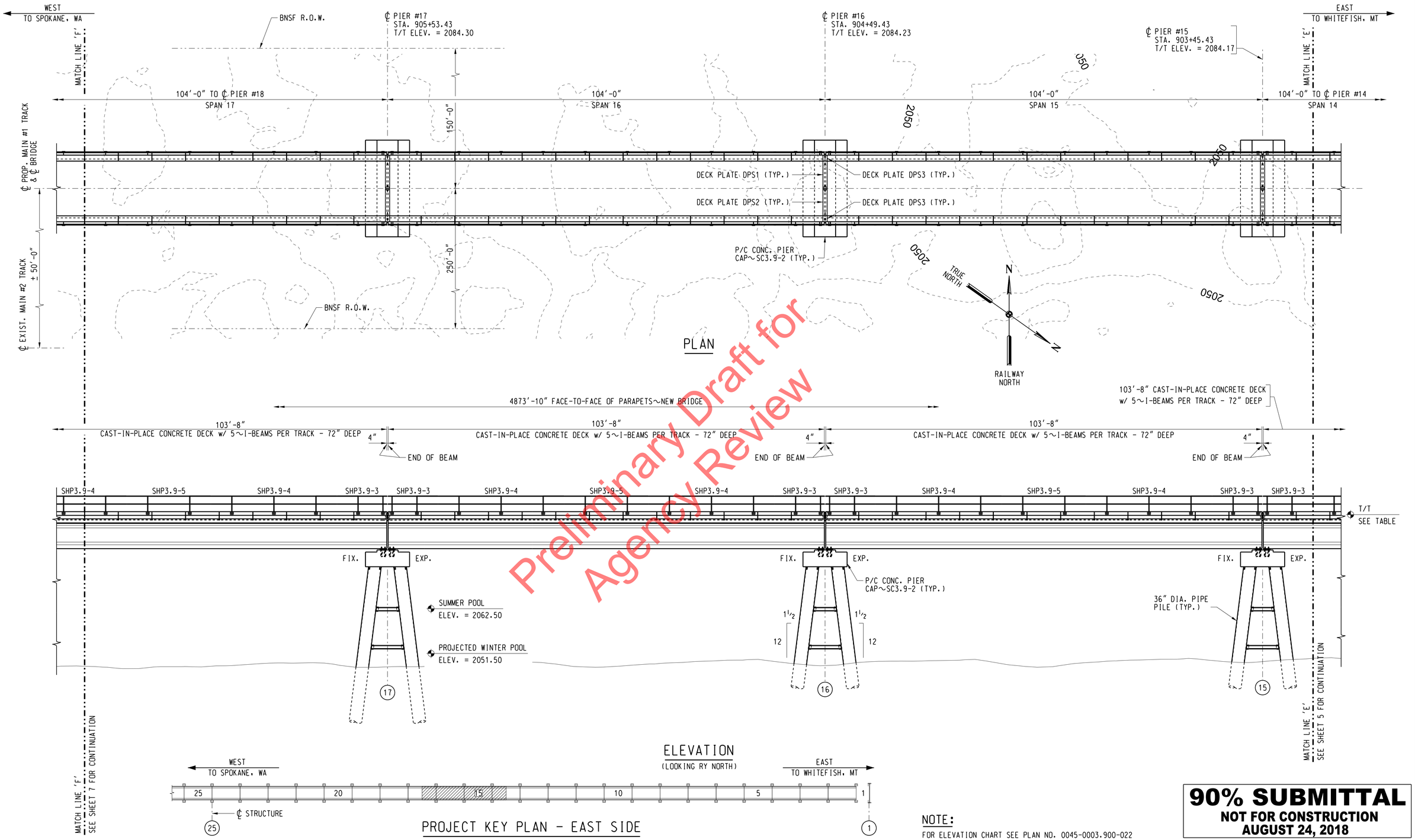

Preliminary Draft for Agency Review

90% SUBMITTAL
NOT FOR CONSTRUCTION
AUGUST 24, 2018

NOTE:
FOR ELEVATION CHART SEE PLAN NO. 0045-0003.900-022

DES:	TJH
DRAWN:	GTJ
CHECK:	MAF
DATE:	AUG 2018
AUTH:	XXX-XXXX
LINE SEG:	0045

BNSF RAILWAY
BRIDGE ENGINEERING KANSAS CITY, KS
APPROVED:
ASST. DIRECTOR STRUCTURES DESIGN

SANDPOINT JCT. TO LAKESIDE JCT.
BRIDGE NUMBER 3.9
OVER LAKE PEND OREILLE NEAR SANDPOINT, ID
GENERAL PLAN & ELEVATION (6 OF 18)

PLAN NO: 0045-0003.900-008 SHEET: 08 OF 56

HANSON
Hanson Professional Services Inc.

File Location: X:\Hpsis\145005TCAD\Struct\Sheet\0003008.dgn
Date Printed: 8/30/2018 Time Printed: 10:36:04 AM

USCG0011183/27

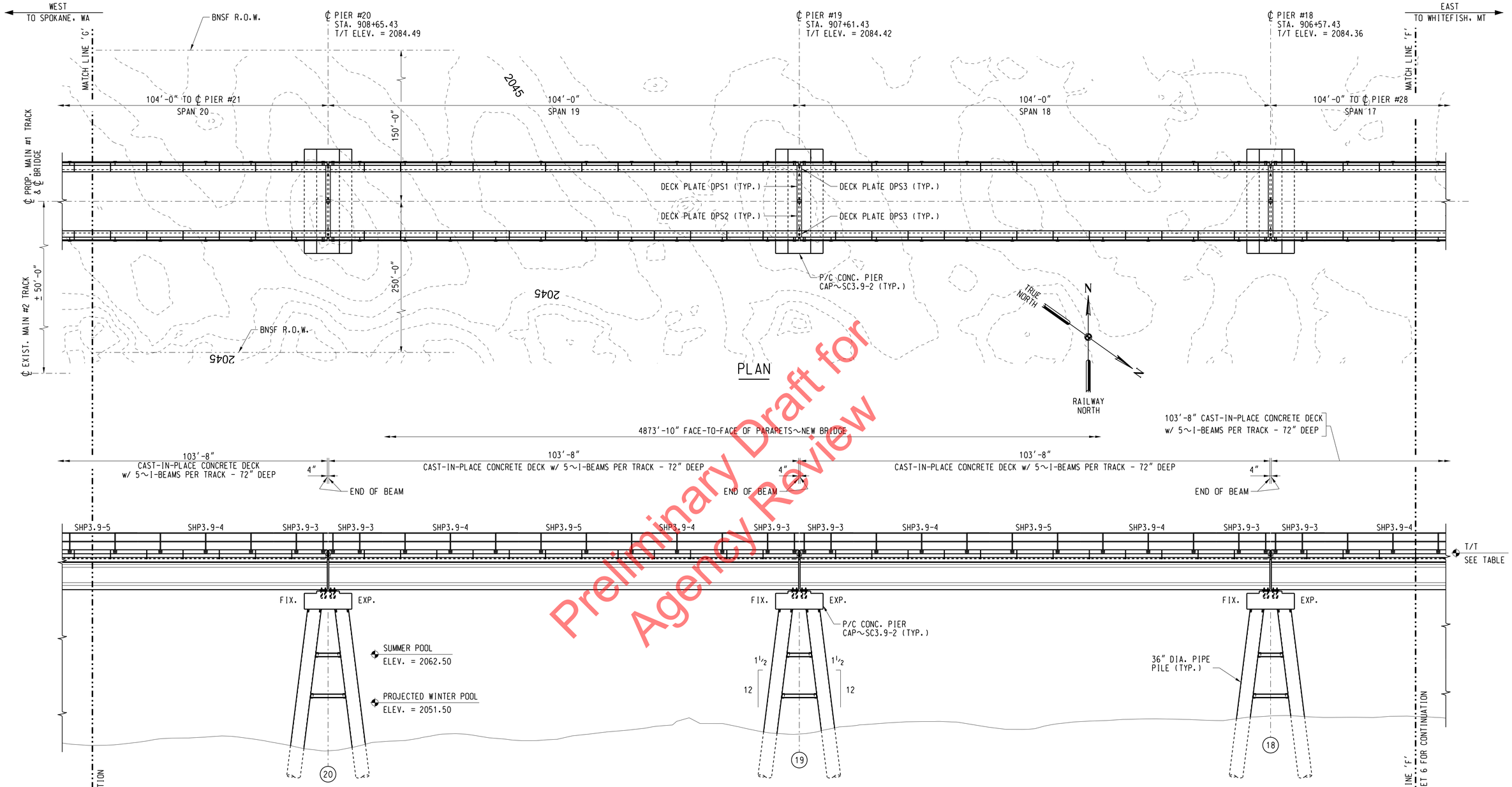

Preliminary Draft for Agency Review

90% SUBMITTAL
NOT FOR CONSTRUCTION
AUGUST 24, 2018

NOTE:
FOR ELEVATION CHART SEE PLAN NO. 0045-0003.900-022

DES:	TJH
DRAWN:	GTJ
CHECK:	MAF
DATE:	AUG 2018
AUTH:	XXX-XXXX
LINE SEG:	0045

BNSF RAILWAY
BRIDGE ENGINEERING KANSAS CITY, KS
APPROVED:
ASST. DIRECTOR STRUCTURES DESIGN

SANDPOINT JCT. TO LAKESIDE JCT.
BRIDGE NUMBER 3.9
OVER LAKE PEND OREILLE NEAR SANDPOINT, ID
GENERAL PLAN & ELEVATION (7 OF 18)

PLAN NO: 0045-0003.900-009 SHEET: 09 OF 56

HANSON
Hanson Professional Services Inc.

File Location: X:\Projects\4850STC\CAD\Struct\Sheet\0030009.dgn
Date Printed: 8/30/2018 Time Printed: 10:36:06 AM

USCG0011193/27

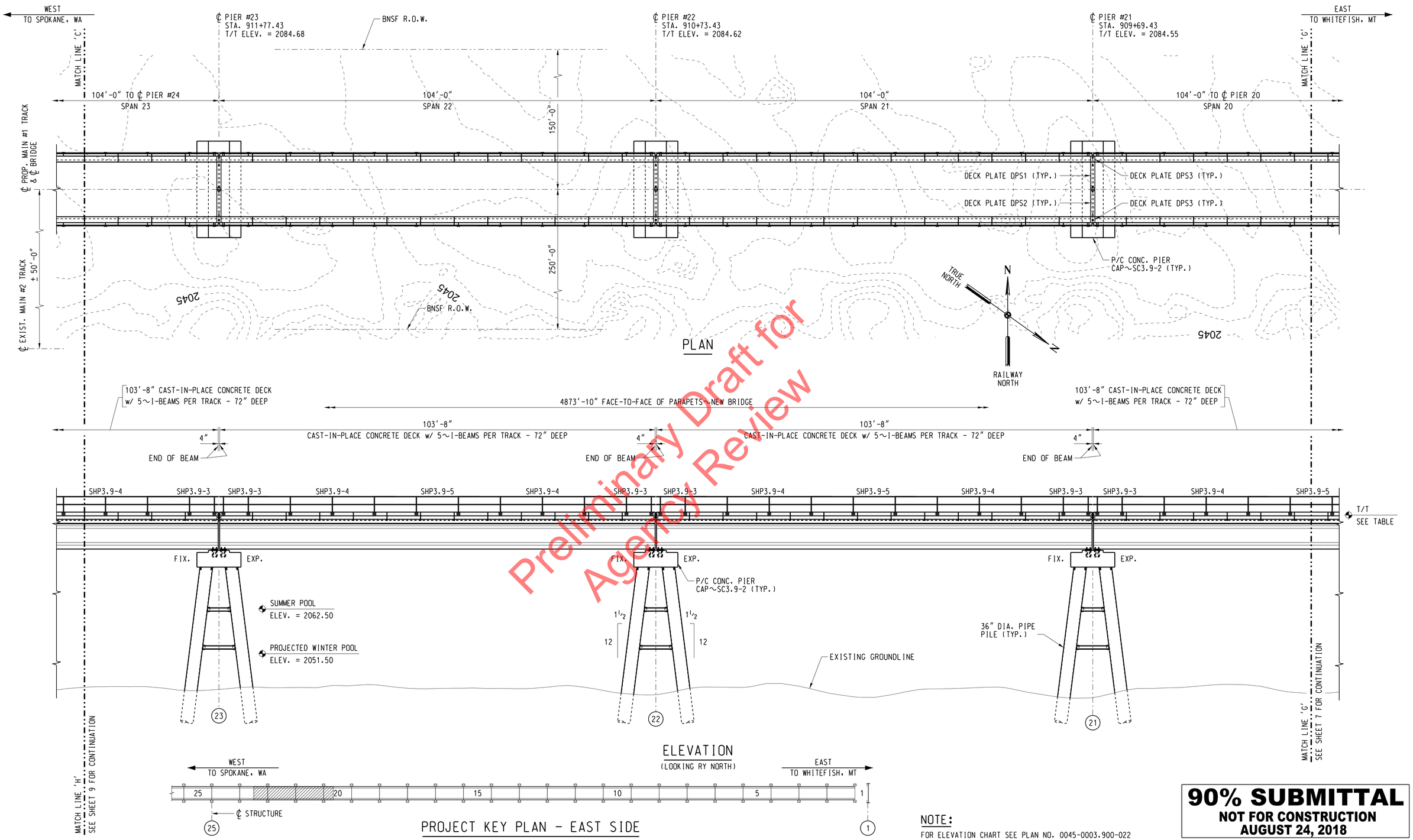

Preliminary Draft for Agency Review

90% SUBMITTAL
NOT FOR CONSTRUCTION
AUGUST 24, 2018

NOTE:
FOR ELEVATION CHART SEE PLAN NO. 0045-0003.900-022

DES:	TJH
DRAWN:	GTJ
CHECK:	MAF
DATE:	AUG 2018
AUTH:	XXX-XXXX
LINE SEG:	0045

BNSF RAILWAY
BRIDGE ENGINEERING KANSAS CITY, KS
APPROVED:
ASST. DIRECTOR STRUCTURES DESIGN

SANDPOINT JCT. TO LAKESIDE JCT.
BRIDGE NUMBER 3.9
OVER LAKE PEND OREILLE NEAR SANDPOINT, ID
GENERAL PLAN & ELEVATION (8 OF 18)

PLAN NO: 0045-0003.900-010 | SHEET: 10 OF 56

HANSON
Hanson Professional Services Inc.

File Location: U:\dgn\480057\CAD\StructSheet\0039010.dgn
Date Printed: 8/30/2018 Time Printed: 10:36:07 AM

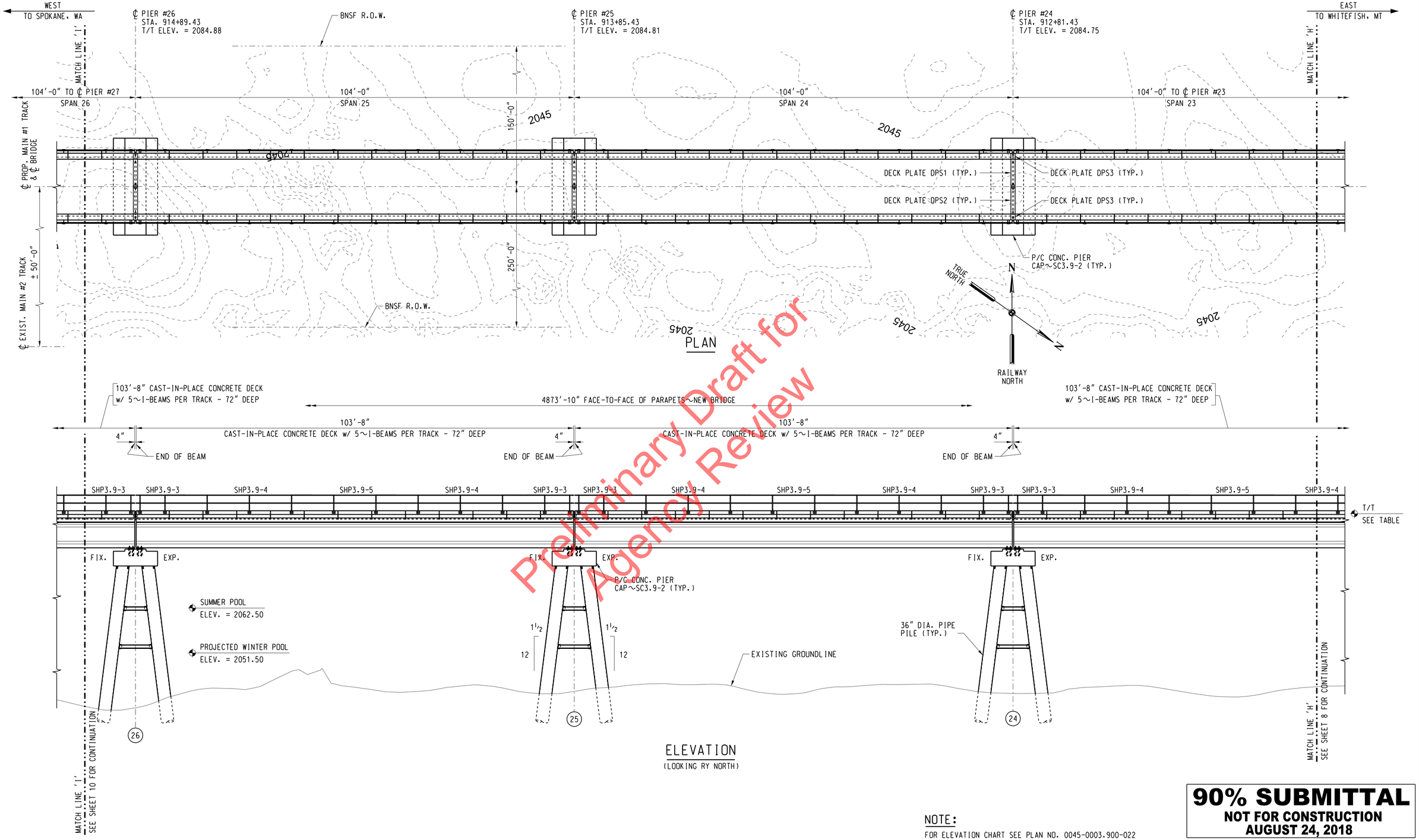

Preliminary Draft for Agency Review

90% SUBMITTAL
NOT FOR CONSTRUCTION
AUGUST 24, 2018

NOTE:
FOR ELEVATION CHART SEE PLAN NO. 0045-0003.900-022

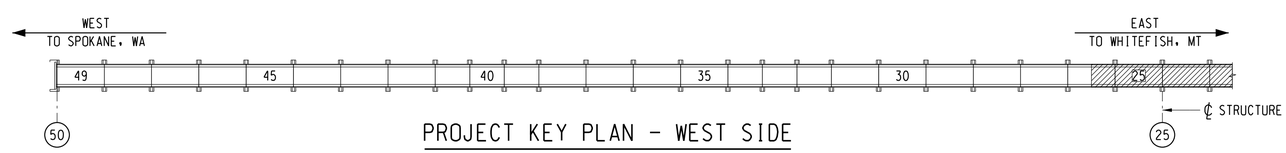

PROJECT KEY PLAN - WEST SIDE

DES:	TJH
DRAWN:	GTJ
CHECK:	MAF
DATE:	AUG 2018
AUTH:	XXX-XXXX
LINE SEG:	0045

BNSF RAILWAY
BRIDGE ENGINEERING KANSAS CITY, KS
APPROVED:
ASST. DIRECTOR STRUCTURES DESIGN

SANDPOINT JCT. TO LAKESIDE JCT.
BRIDGE NUMBER 3.9
OVER LAKE PEND OREILLE NEAR SANDPOINT, ID
GENERAL PLAN & ELEVATION (9 OF 18)

PLAN NO: 0045-0003.900-011 | SHEET: 11 OF 56

HANSON
Hanson Professional Services Inc.

File Location: U:\Edge\14R0057\CAD\Struct\Sheet\0033900011.dgn
Date Printed: 8/30/2018 Time Printed: 10:36:09 AM

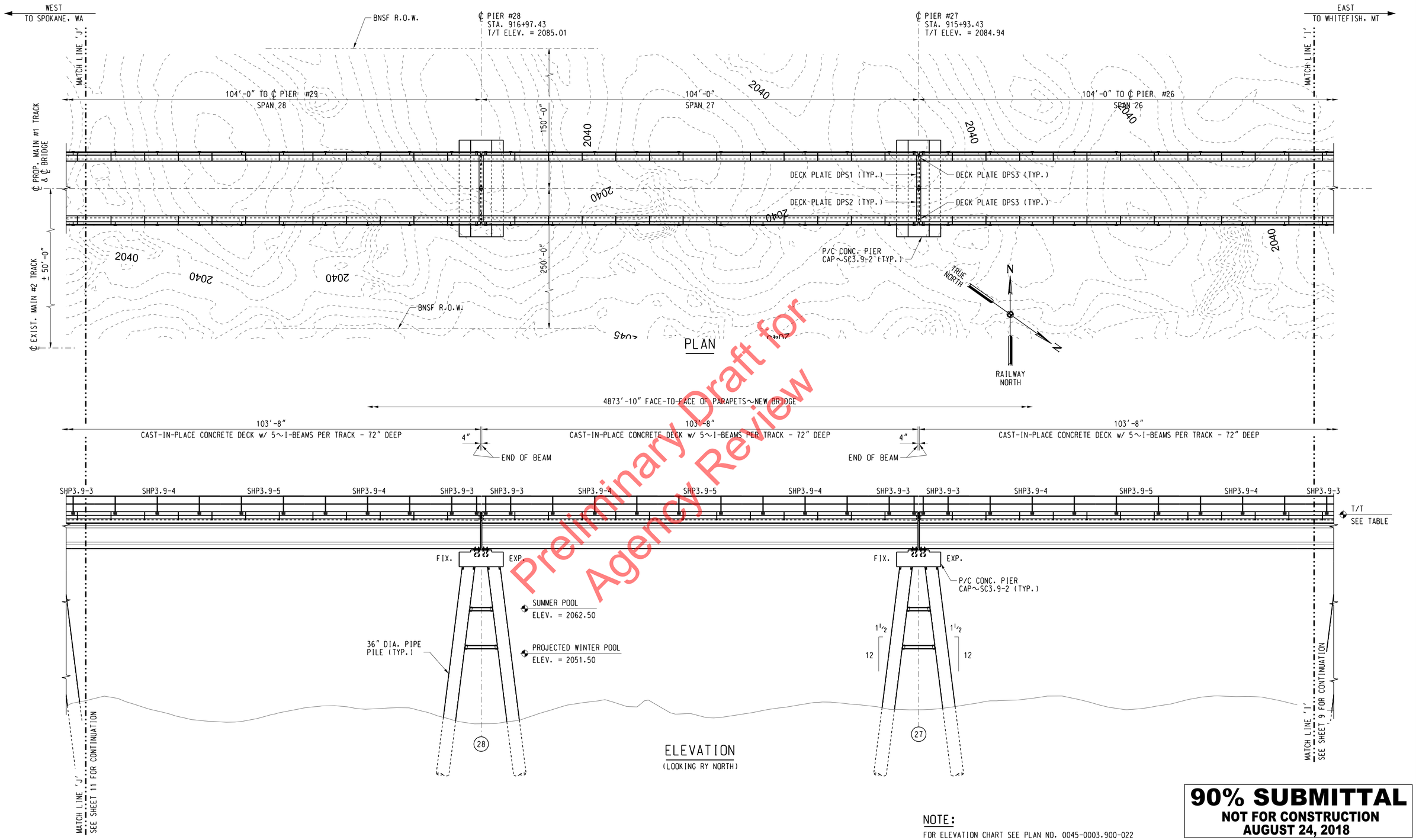

Preliminary Draft for Agency Review

90% SUBMITTAL
NOT FOR CONSTRUCTION
AUGUST 24, 2018

NOTE:
FOR ELEVATION CHART SEE PLAN NO. 0045-0003.900-022

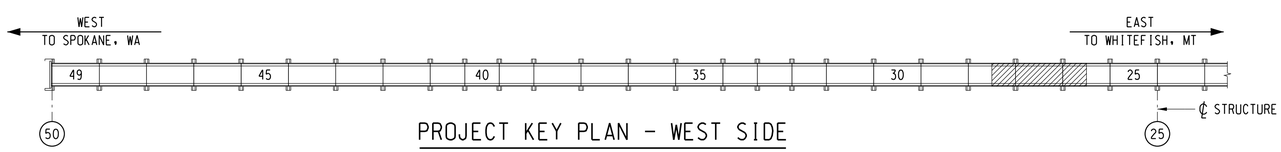

PROJECT KEY PLAN - WEST SIDE

DES:	TJH
DRAWN:	GTJ
CHECK:	MAF
DATE:	AUG 2018
AUTH:	XXX-XXXX
LINE SEG:	0045

BNSF RAILWAY
BRIDGE ENGINEERING KANSAS CITY, KS
APPROVED:
ASST. DIRECTOR STRUCTURES DESIGN

SANDPOINT JCT. TO LAKESIDE JCT.
BRIDGE NUMBER 3.9
OVER LAKE PEND OREILLE NEAR SANDPOINT, ID
GENERAL PLAN & ELEVATION (10 OF 18)

PLAN NO: 0045-0003.900-012 SHEET: 12 OF 56

HANSON
Hanson Professional Services Inc.

File Location: I:\14jobs\14R0057\CAD\Struct\Sheet\00039001 2.dgn
Date Printed: 8/30/2018 Time Printed: 10:36:11 AM

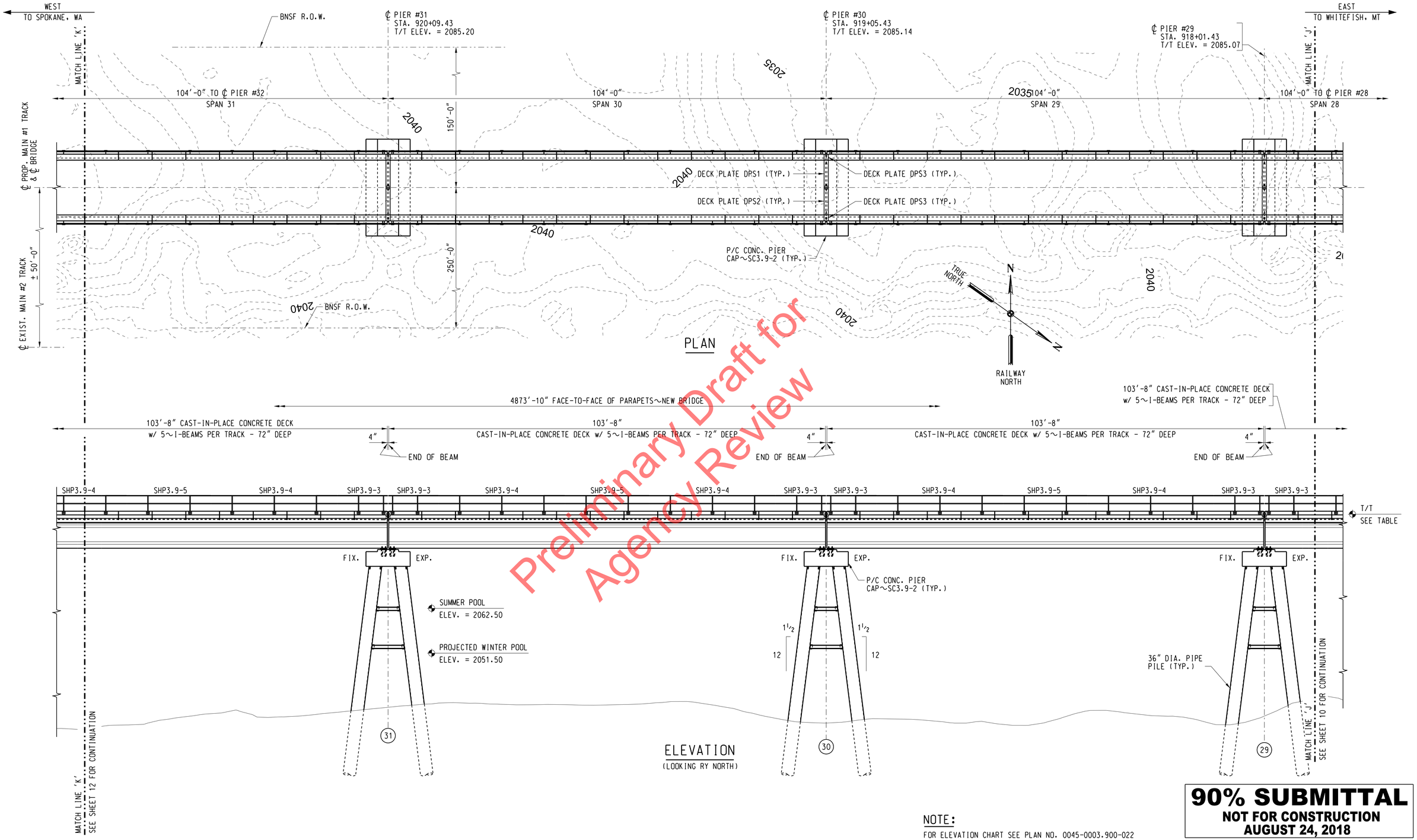

Preliminary Draft for Agency Review

90% SUBMITTAL
NOT FOR CONSTRUCTION
AUGUST 24, 2018

NOTE:
FOR ELEVATION CHART SEE PLAN NO. 0045-0003.900-022

DES:	TJH
DRAWN:	GTJ
CHECK:	MAF
DATE:	AUG 2018
AUTH:	XXX-XXXX
LINE SEG:	0045

BNSF RAILWAY
BRIDGE ENGINEERING KANSAS CITY, KS
APPROVED:
ASST. DIRECTOR STRUCTURES DESIGN

SANDPOINT JCT. TO LAKESIDE JCT.
BRIDGE NUMBER 3.9
OVER LAKE PEND OREILLE NEAR SANDPOINT, ID
GENERAL PLAN & ELEVATION (11 OF 18)

PLAN NO: 0045-0003.900-013 | SHEET: 13 OF 56

HANSON
Hanson Professional Services Inc.

File Location: W:\Hpsi\14850STC\CAD\Struct\Sheet\0033\0013.dgn
Date Printed: 8/30/2018 Time Printed: 10:36:13 AM

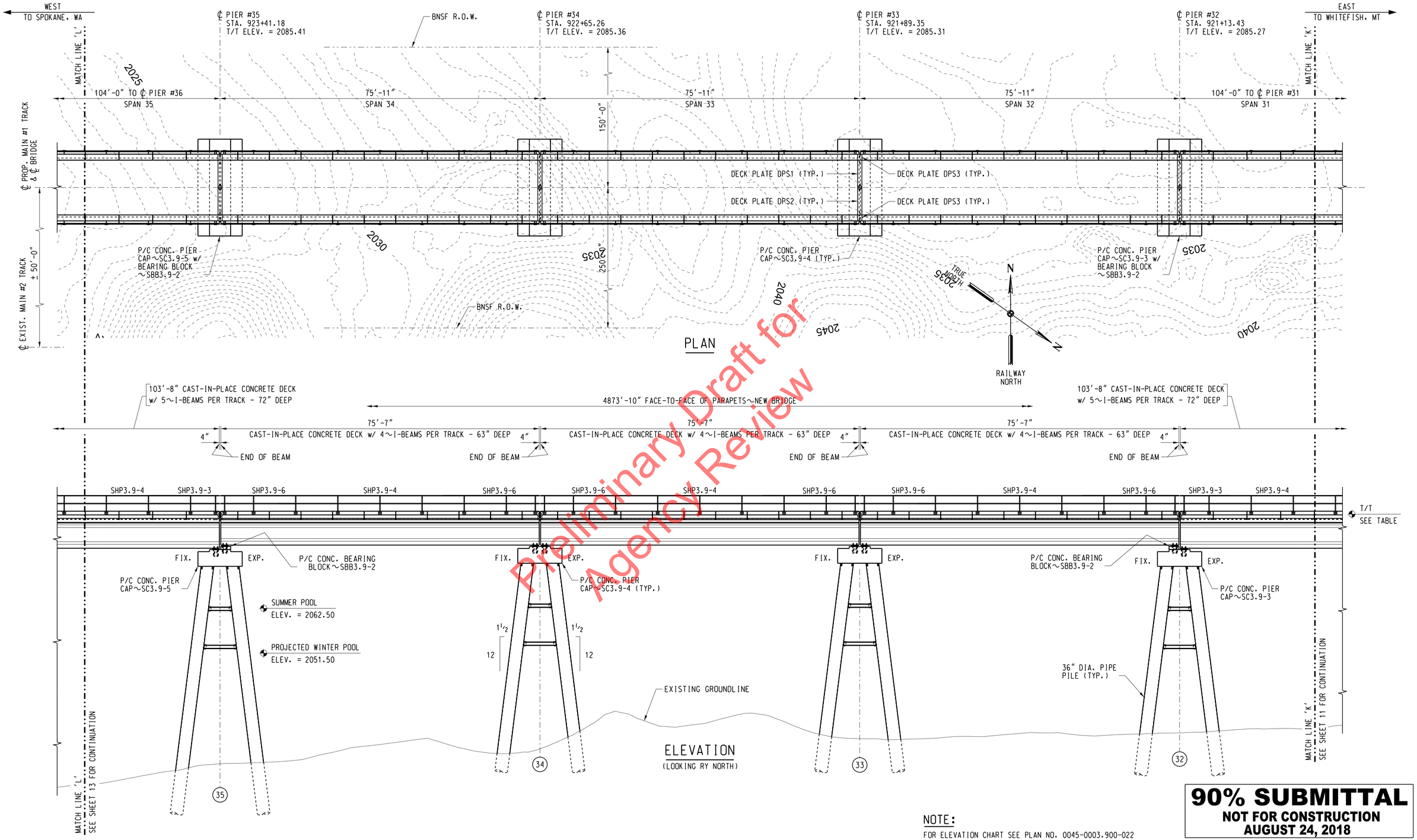

Preliminary Draft for Agency Review

90% SUBMITTAL
NOT FOR CONSTRUCTION
AUGUST 24, 2018

NOTE:
FOR ELEVATION CHART SEE PLAN NO. 0045-0003.900-022

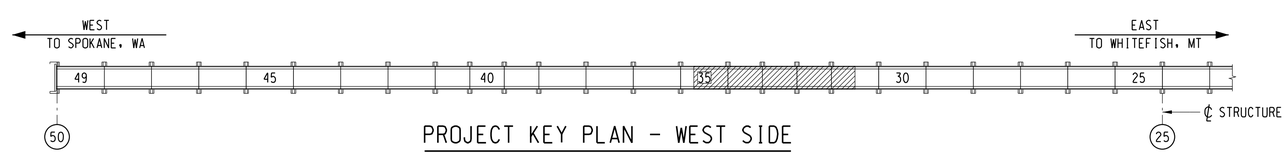

PROJECT KEY PLAN - WEST SIDE

DES:	TJH
DRAWN:	GTJ
CHECK:	MAF
DATE:	AUG 2018
AUTH:	XXX-XXXX
LINE SEG:	0045

BNSF RAILWAY
BRIDGE ENGINEERING KANSAS CITY, KS
APPROVED:
ASST. DIRECTOR STRUCTURES DESIGN

SANDPOINT JCT. TO LAKESIDE JCT.
BRIDGE NUMBER 3.9
OVER LAKE PEND OREILLE NEAR SANDPOINT, ID
GENERAL PLAN & ELEVATION (12 OF 18)

PLAN NO: 0045-0003.900-014 SHEET: 14 OF 56

HANSON
Hanson Professional Services Inc.

File Location: E:\Projects\4870357\CAD\Struct\Sheet\0033900014.dgn
Date Printed: 8/30/2018 Time Printed: 10:36:15 AM

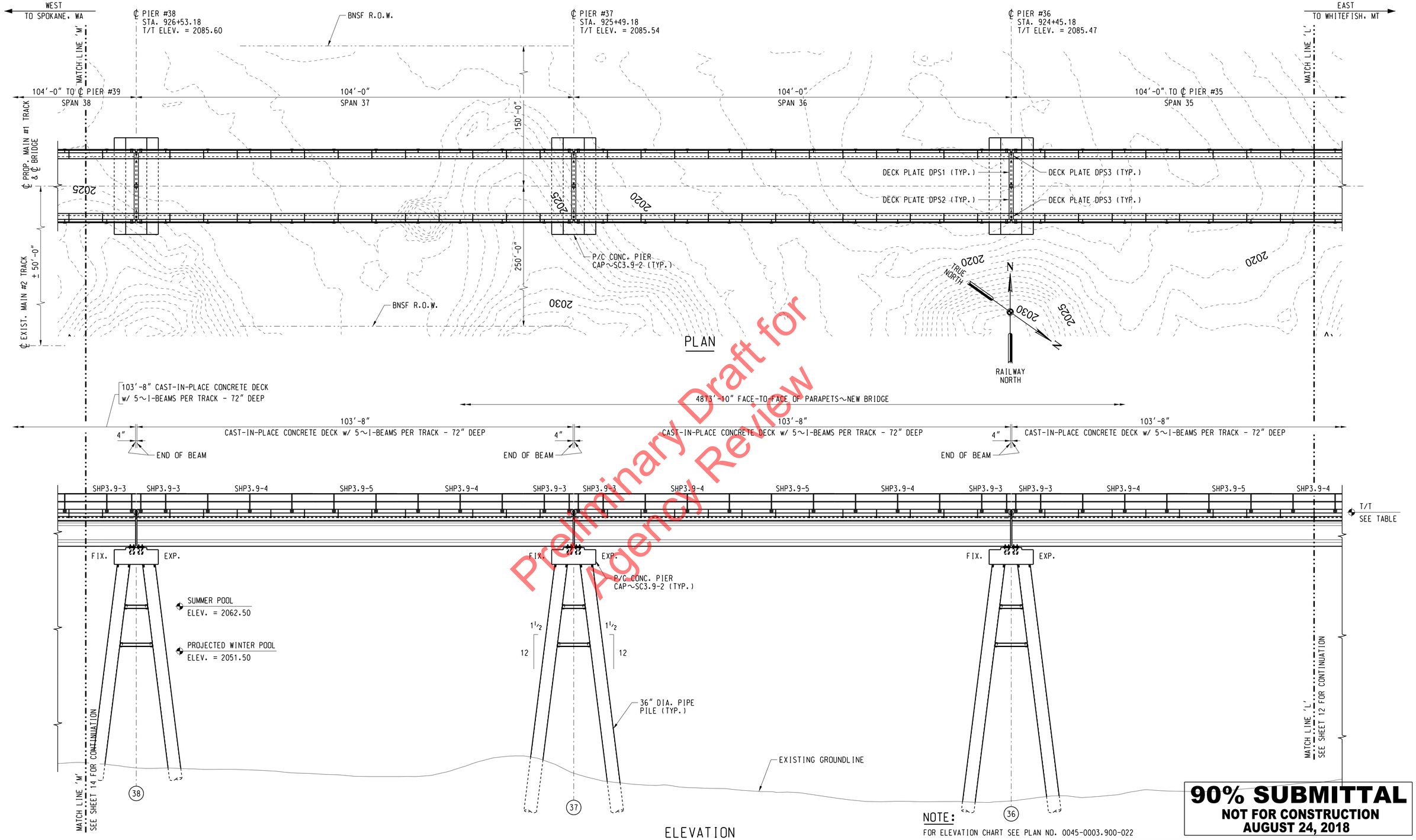

Preliminary Draft for Agency Review

NOTE:
FOR ELEVATION CHART SEE PLAN NO. 0045-0003.900-022

90% SUBMITTAL
NOT FOR CONSTRUCTION
AUGUST 24, 2018

DES:	TJH
DRAWN:	GTJ
CHECK:	MAF
DATE:	AUG 2018
AUTH:	XXX-XXXX
LINE SEG:	0045

BNSF RAILWAY
BRIDGE ENGINEERING KANSAS CITY, KS
APPROVED:
ASST. DIRECTOR STRUCTURES DESIGN

SANDPOINT JCT. TO LAKESIDE JCT.
BRIDGE NUMBER 3.9
OVER LAKE PEND OREILLE NEAR SANDPOINT, ID
GENERAL PLAN & ELEVATION (13 OF 18)

PLAN NO: 0045-0003.900-015 SHEET: 15 OF 56

HANSON
Hanson Professional Services Inc.

File Location: I:\14jobs\14R0057\CAD\Struct\Sheet\00039001S.dgn
Date Printed: 8/30/2018 Time Printed: 10:36:16 AM

USCG0011253/27

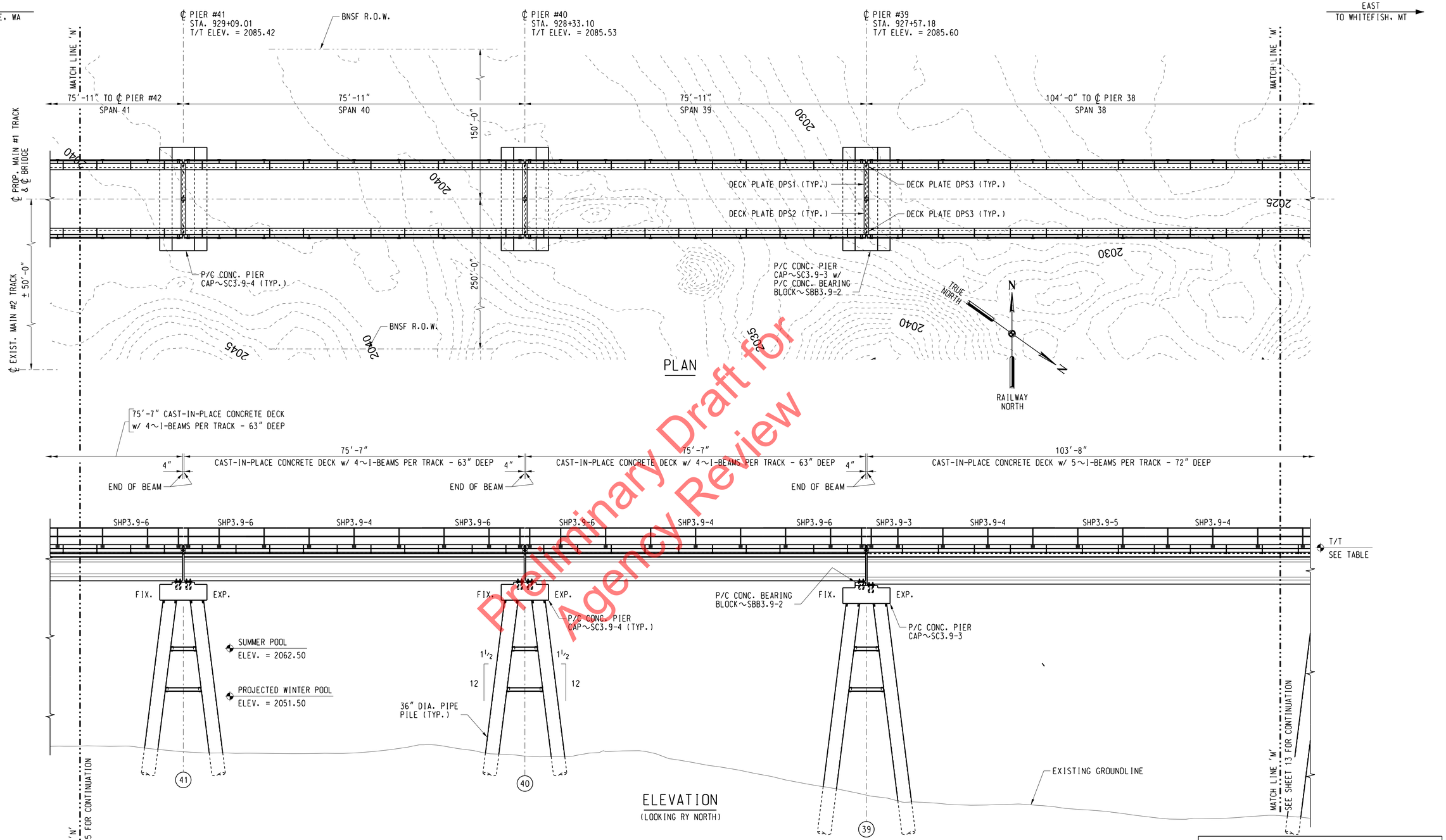

Preliminary Draft for Agency Review

90% SUBMITTAL
NOT FOR CONSTRUCTION
AUGUST 24, 2018

NOTE:
FOR ELEVATION CHART SEE PLAN NO. 0045-0003.900-022

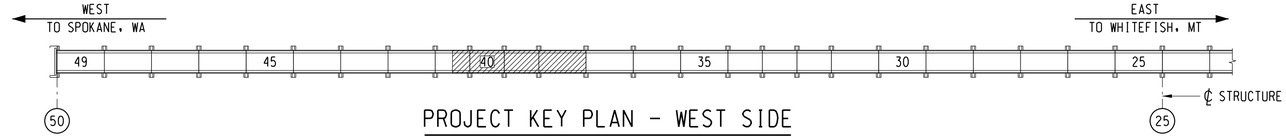

PROJECT KEY PLAN - WEST SIDE

DES:	TJH
DRAWN:	GTJ
CHECK:	MAF
DATE:	AUG 2018
AUTH:	XXX-XXXX
LINE SEG:	0045

BNSF RAILWAY
BRIDGE ENGINEERING KANSAS CITY, KS
APPROVED:
ASST. DIRECTOR STRUCTURES DESIGN

SANDPOINT JCT. TO LAKESIDE JCT.
BRIDGE NUMBER 3.9
OVER LAKE PEND OREILLE NEAR SANDPOINT, ID
GENERAL PLAN & ELEVATION (14 OF 18)

PLAN NO: 0045-0003.900-016 SHEET: 16 OF 56

HANSON
Hanson Professional Services Inc.

File Location: E:\Epic\14MR0057\CAD\Sheet\0003900.dgn
Date Printed: 8/30/2018 Time Printed: 10:36:18 AM

USCG0011263/27

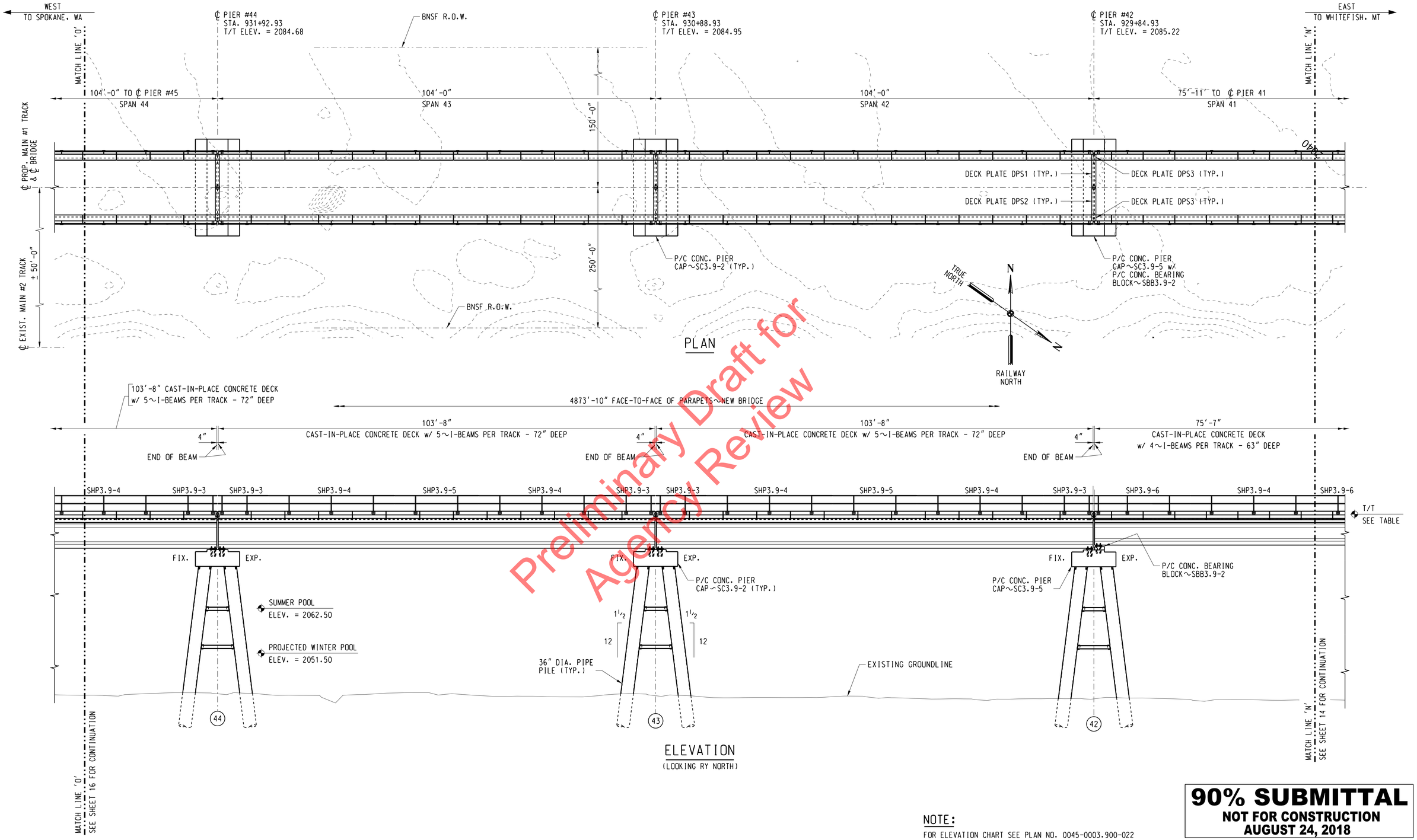

Preliminary Draft for Agency Review

90% SUBMITTAL
NOT FOR CONSTRUCTION
AUGUST 24, 2018

NOTE:
FOR ELEVATION CHART SEE PLAN NO. 0045-0003.900-022

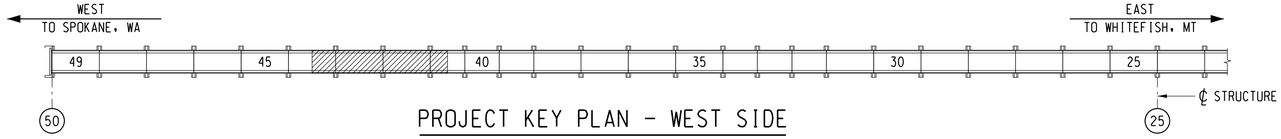

PROJECT KEY PLAN - WEST SIDE

DES:	TJH
DRAWN:	GTJ
CHECK:	MAF
DATE:	AUG 2018
AUTH:	XXX-XXXX
LINE SEG:	0045

BNSF RAILWAY
BRIDGE ENGINEERING KANSAS CITY, KS
APPROVED:
ASST. DIRECTOR STRUCTURES DESIGN

SANDPOINT JCT. TO LAKESIDE JCT.
BRIDGE NUMBER 3.9
OVER LAKE PEND OREILLE NEAR SANDPOINT, ID
GENERAL PLAN & ELEVATION (15 OF 18)

PLAN NO: 0045-0003.900-017 SHEET: 17 OF 56

HANSON
Hanson Professional Services Inc.

File Location: E:\Apps\AMX05\CAD\Sheet\0003900017.dgn
Date Printed: 8/30/2018 Time Printed: 10:36:20 AM

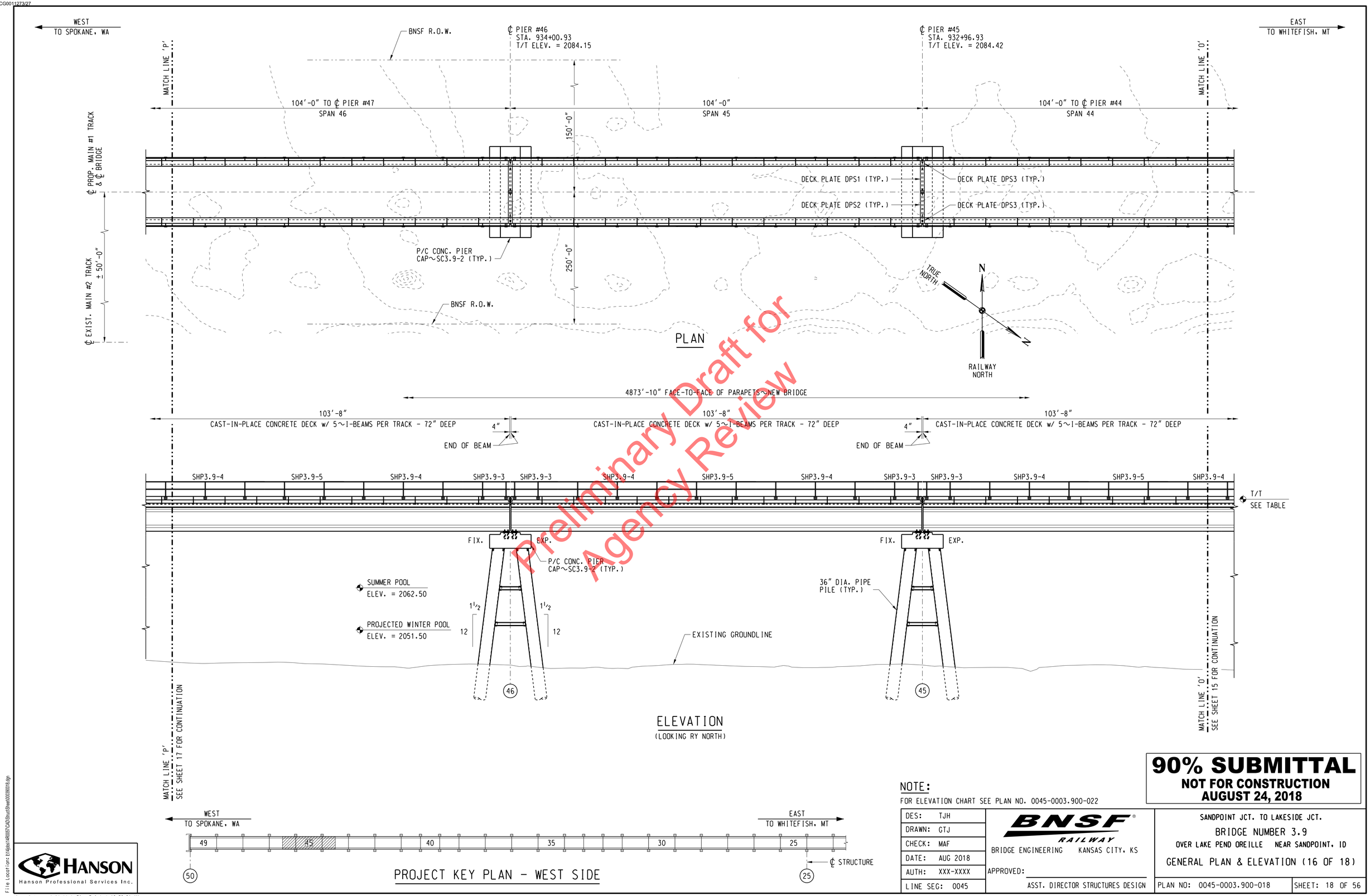

Preliminary Draft for Agency Review

90% SUBMITTAL
NOT FOR CONSTRUCTION
AUGUST 24, 2018

NOTE:
FOR ELEVATION CHART SEE PLAN NO. 0045-0003.900-022

DES:	TJH
DRAWN:	GTJ
CHECK:	MAF
DATE:	AUG 2018
AUTH:	XXX-XXXX
LINE SEG:	0045

BNSF RAILWAY
BRIDGE ENGINEERING KANSAS CITY, KS
APPROVED:
ASST. DIRECTOR STRUCTURES DESIGN

SANDPOINT JCT. TO LAKESIDE JCT.
BRIDGE NUMBER 3.9
OVER LAKE PEND OREILLE NEAR SANDPOINT, ID
GENERAL PLAN & ELEVATION (16 OF 18)

PLAN NO: 0045-0003.900-018 SHEET: 18 OF 56

HANSON
Hanson Professional Services Inc.

Date Printed: 8/30/2018 Time Printed: 10:36:21 AM

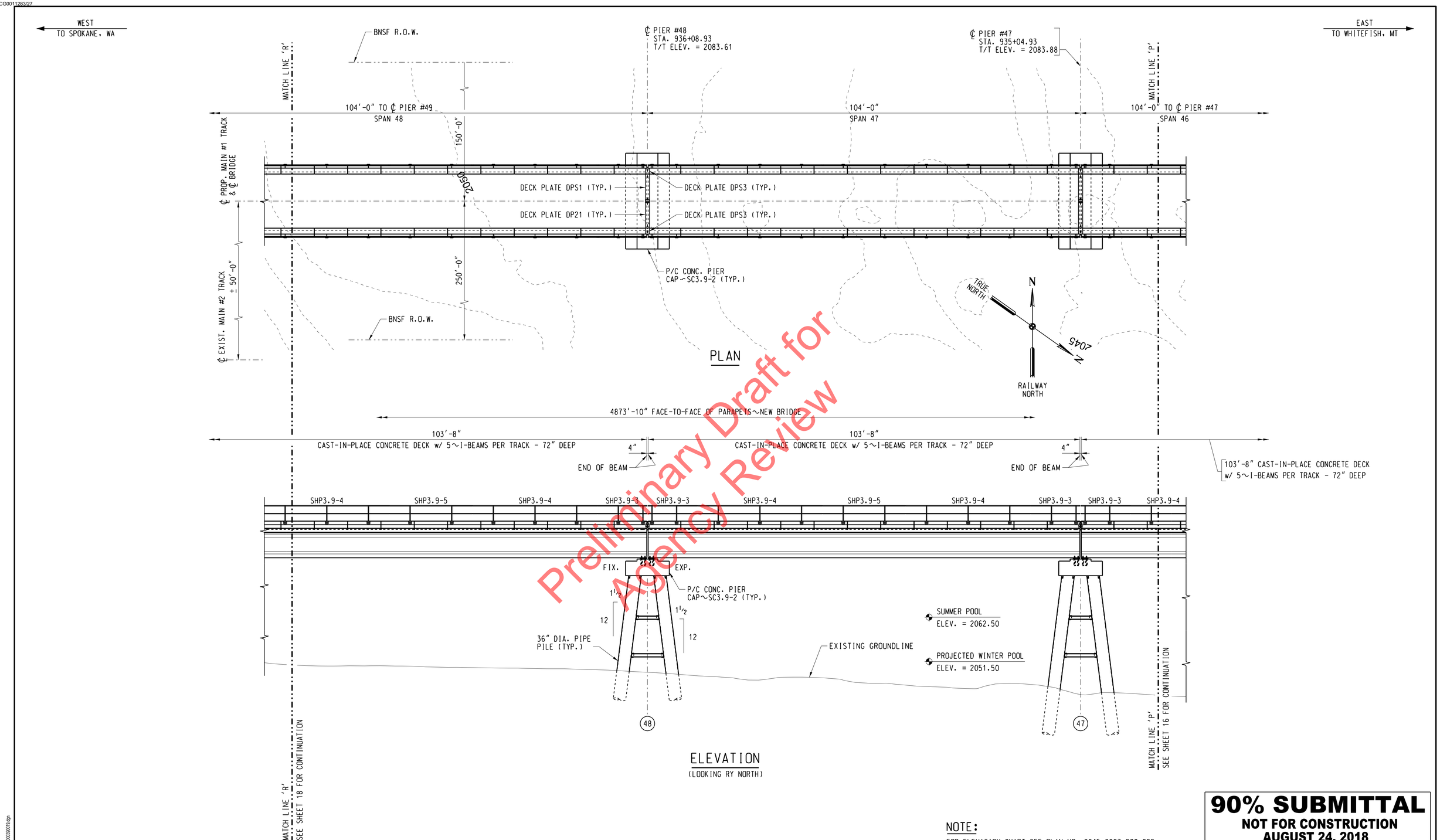

Preliminary Draft for Agency Review

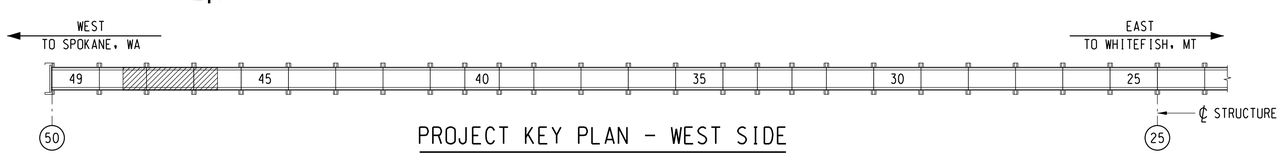

PROJECT KEY PLAN - WEST SIDE

NOTE:

FOR ELEVATION CHART SEE PLAN NO. 0045-0003.900-022

90% SUBMITTAL
NOT FOR CONSTRUCTION
AUGUST 24, 2018

DES:	TJH
DRAWN:	GTJ
CHECK:	MAF
DATE:	AUG 2018
AUTH:	XXX-XXXX
LINE SEG:	0045

BNSF RAILWAY
BRIDGE ENGINEERING KANSAS CITY, KS

APPROVED:
ASST. DIRECTOR STRUCTURES DESIGN

SANDPOINT JCT. TO LAKESIDE JCT.
BRIDGE NUMBER 3.9
OVER LAKE PEND OREILLE NEAR SANDPOINT, ID
GENERAL PLAN & ELEVATION (17 OF 18)

PLAN NO: 0045-0003.900-019 SHEET: 19 OF 56

HANSON
Hanson Professional Services Inc.

Date Printed: 8/30/2018 Time Printed: 10:36:23 AM

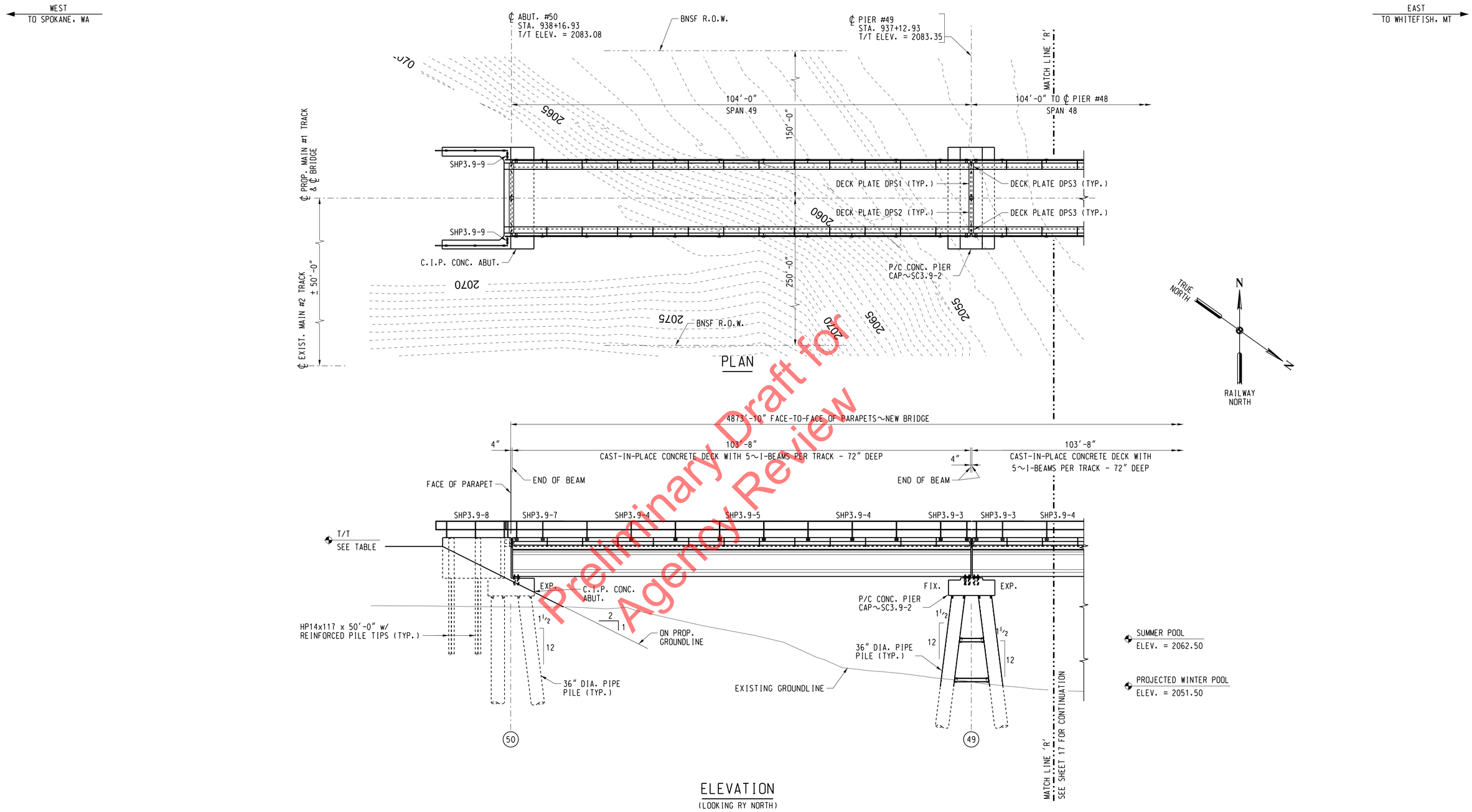

Preliminary Draft for Agency Review

90% SUBMITTAL
NOT FOR CONSTRUCTION
AUGUST 24, 2018

NOTE:
FOR ELEVATION CHART SEE PLAN NO. 0045-0003.900-022

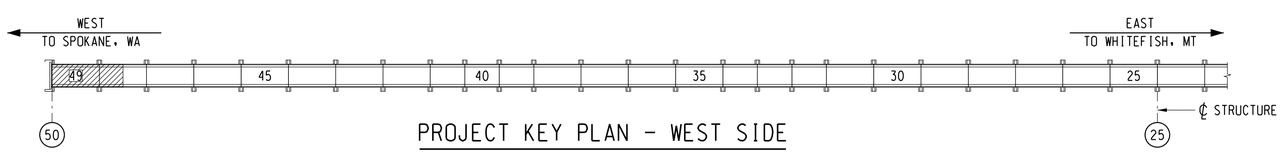

PROJECT KEY PLAN - WEST SIDE

DES:	TJH
DRAWN:	GTJ
CHECK:	MAF
DATE:	AUG 2018
AUTH:	XXX-XXXX
LINE SEG:	0045

BNSF RAILWAY
BRIDGE ENGINEERING KANSAS CITY, KS
APPROVED:
ASST. DIRECTOR STRUCTURES DESIGN

SANDPOINT JCT. TO LAKESIDE JCT.
BRIDGE NUMBER 3.9
OVER LAKE PEND OREILLE NEAR SANDPOINT, ID
GENERAL PLAN & ELEVATION (18 OF 18)

PLAN NO: 0045-0003.900-020 SHEET: 20 OF 56

HANSON
Hanson Professional Services Inc.

File Location: I:\14jobs\14R0057\CAD\StructSheet\00039002D.dgn
Date Printed: 8/30/2018 Time Printed: 10:36:25 AM

USCG0011303/27

WEST
TO SPOKANE, WA

EAST
TO WHITEFISH, MT

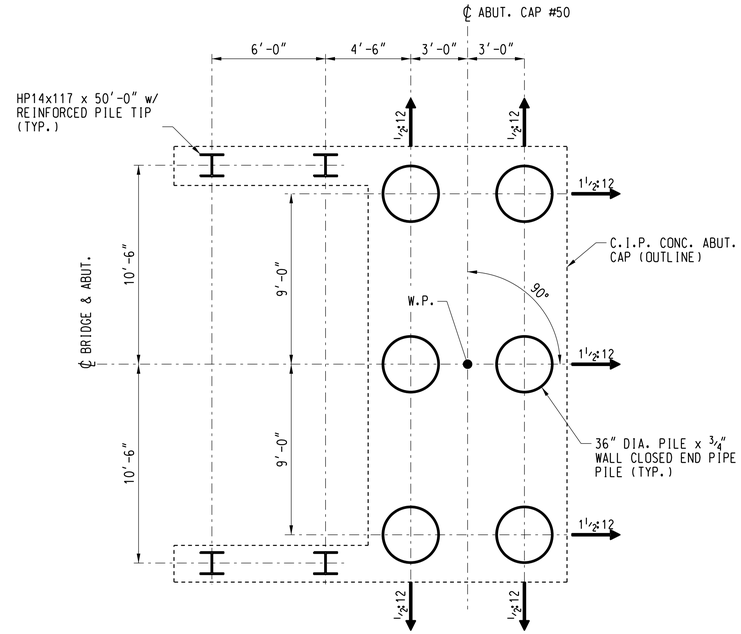

ABUT. #50

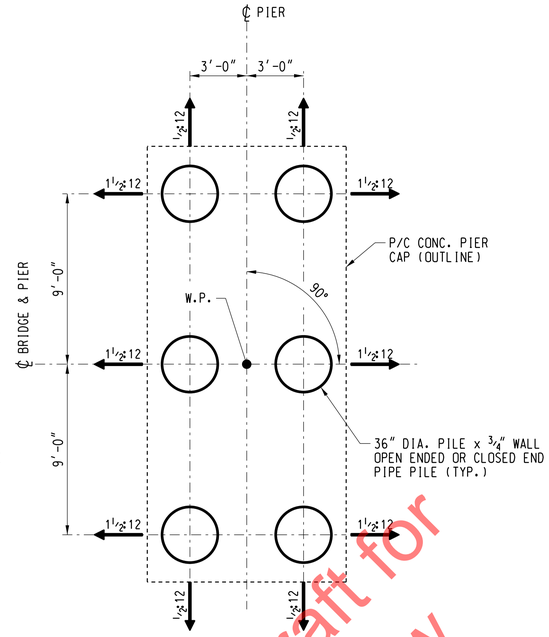

DOUBLE BENT

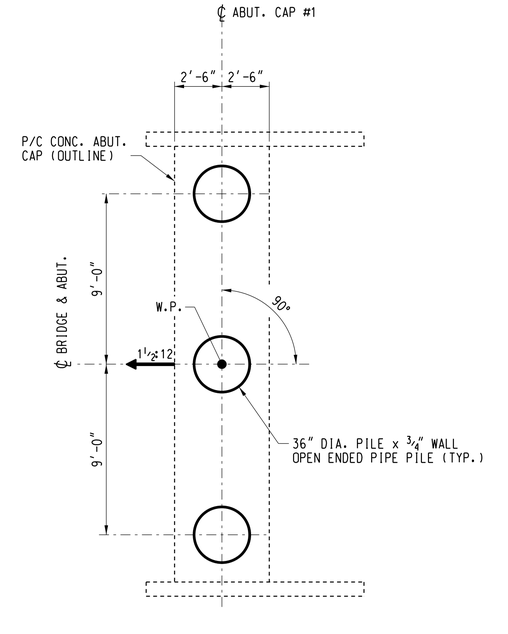

ABUT. #1

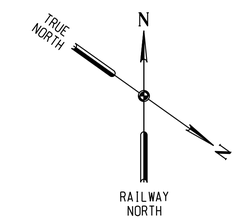

TYPICAL PILE LAYOUT DIAGRAMS - PIERS & ABUTMENTS

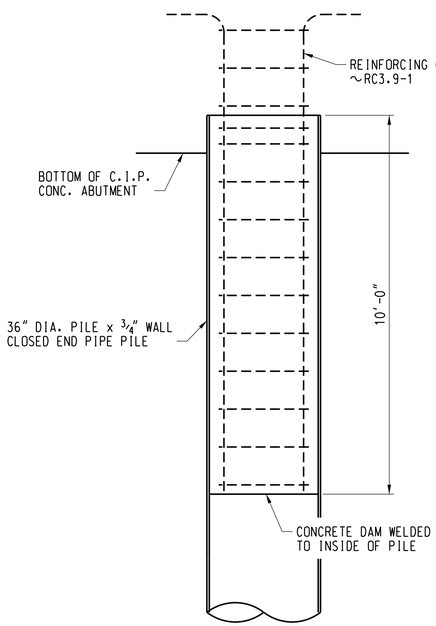

TYPICAL ABUT. #50 PILES

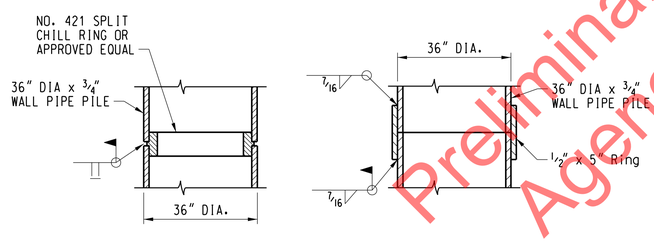

ALTERNATE PIPE PILE SPLICE DETAILS

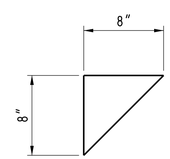

CONNECTION BAR CB3.9

1 BAR 8" x 3/4" x 0'-8"
WEIGHT = 6.8 LBS.
XXX REQUIRED

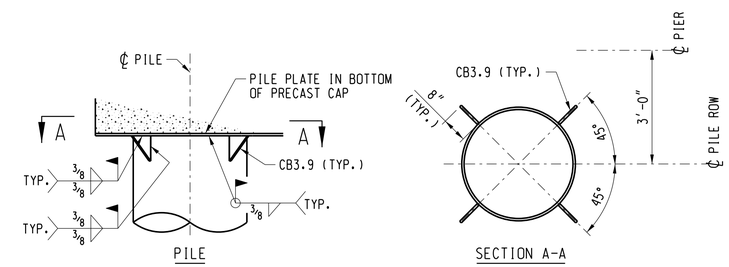

PILE-TO-PIER DETAILS

AFTER PRECAST CAP IS SET IN PROPER LOCATION AND EPOXY MORTAR BETWEEN PILE AND CAP HAS HARDENED, PLACE AND WELD 4~CB3.9'S PER PILE AS SHOWN, BURNING THE SIDE OF CB3.9 AS REQUIRED TO FIT BATTERED PILES. PAINT CB3.9'S & PILE PLATES AFTER WELDING.

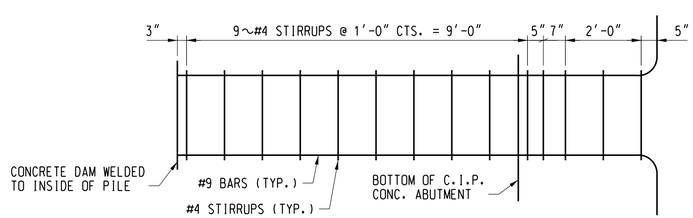

REINFORCING CAGE - RC3.9-1

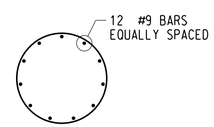

Preliminary Draft for Agency Review

90% SUBMITTAL
NOT FOR CONSTRUCTION
AUGUST 24, 2018

HANSON
Hanson Professional Services Inc.

DES:	TJH
DRAWN:	GTJ
CHECK:	MAF
DATE:	AUG 2018
AUTH:	XXX-XXXX
LINE SEG:	0045

BNSF RAILWAY
BRIDGE ENGINEERING KANSAS CITY, KS
APPROVED:
ASST. DIRECTOR STRUCTURES DESIGN

SANDPOINT JCT. TO LAKESIDE JCT.
BRIDGE NUMBER 3.9
OVER LAKE PEND OREILLE NEAR SANDPOINT, ID
PILE LAYOUT PLAN & DETAILS

PLAN NO: 0045-0003.900-021 SHEET: 21 OF 56

File Location: U:\Hdpsi\HR0057\CAD\Struct\Sheet\0038X021.dgn
Date Printed: 8/30/2018 Time Printed: 10:36:26 AM

TABLE OF ELEVATIONS - BRIDGE 3.9

LOCATION	TOP/TIE	BRIDGE SEAT ELEVATION	PILE CUTOFF ELEVATION	ESTIMATED TIP ELEVATION	ESTIMATED PILE LENGTH (FT)	MIN. ULT RESISTANCE (TONS)	T/T TO PILE CUTOFF	BRACING HEIGHT	BRACE 'A' DIMENSION	BRACE 'B' DIMENSION	W.P.	
											NORTHING	EASTING
ABUT. 1	2083.29	2078.42	2074.42	1964.4	110	300	8'-10½"	-	-	-	56571.02	33071.74
PIER 2	2083.32	2078.45 / 2074.80	2070.80	1920.8	150	400	12'-6¼"	15'-3½"	8'-2"	10'-0¾"	56532.05	33099.48
PIER 3	2083.39	2074.86	2070.86	1890.9	180	570	12'-6¼"	15'-4¼"	8'-2"	10'-1"	56447.33	33159.79
PIER 4	2083.45	2074.92	2070.92	1890.9	180	570	12'-6¼"	15'-5"	8'-2¼"	10'-1¼"	56362.60	33220.10
PIER 5	2083.52	2074.98	2070.98	1891.0	180	570	12'-6½"	15'-5¾"	8'-2¼"	10'-1½"	56277.88	33280.42
PIER 6	2083.58	2075.05	2071.05	1891.1	180	570	12'-6¼"	15'-6½"	8'-2¼"	10'-1¾"	56193.15	33340.73
PIER 7	2083.65	2075.11	2071.11	1891.1	180	570	12'-6½"	15'-7¼"	8'-2½"	10'-1¾"	56108.43	33401.04
PIER 8	2083.71	2075.17	2071.17	1866.2	205	570	12'-6½"	15'-8"	8'-2½"	10'-2"	56023.70	33461.36
PIER 9	2083.78	2075.23	2071.23	1866.2	205	570	12'-6½"	15'-8¾"	8'-2¾"	10'-2¼"	55938.98	33521.67
PIER 10	2083.84	2075.29	2071.29	1866.3	205	570	12'-6½"	15'-9½"	8'-2¾"	10'-2½"	55854.25	33581.99
PIER 11	2083.91	2075.35	2071.35	1866.4	205	570	12'-6¾"	15'-10¼"	8'-2¾"	10'-2½"	55769.53	33642.30
PIER 12	2083.97	2075.41	2071.41	1866.4	205	570	12'-6¾"	15'-11"	8'-3"	10'-2¾"	55684.80	33702.61
PIER 13	2084.04	2075.47	2071.47	1866.5	205	570	12'-6¾"	15'-11¾"	8'-3"	10'-3"	55600.08	33762.93
PIER 14	2084.10	2075.54	2071.54	1866.5	205	570	12'-6¾"	16'-0½"	8'-3"	10'-3"	55515.36	33823.24
PIER 15	2084.17	2075.60	2071.60	1866.6	205	570	12'-6¾"	16'-1¼"	8'-3"	10'-3¼"	55430.63	33883.55
PIER 16	2084.23	2075.66	2071.66	1866.7	205	570	12'-6¾"	16'-2"	8'-3¼"	10'-3½"	55345.91	33943.87
PIER 17	2084.30	2075.72	2071.72	1866.7	205	570	12'-7"	16'-2¾"	8'-3¼"	10'-3¾"	55261.18	34004.18
PIER 18	2084.36	2075.78	2071.78	1866.8	205	570	12'-7"	16'-3¼"	8'-3½"	10'-3¾"	55176.46	34064.49
PIER 19	2084.42	2075.84	2071.84	1866.8	205	570	12'-7"	16'-4"	8'-3½"	10'-4"	55091.73	34124.81
PIER 20	2084.49	2075.90	2071.90	1866.9	205	570	12'-7"	16'-4¾"	8'-3½"	10'-4¼"	55007.01	34185.12
PIER 21	2084.55	2075.97	2071.97	1867.0	205	570	12'-7"	16'-5¾"	8'-3¾"	10'-4½"	54922.28	34245.43
PIER 22	2084.62	2076.03	2072.03	1866.0	206	570	12'-7"	16'-6¼"	8'-3¾"	10'-4½"	54837.56	34305.75
PIER 23	2084.68	2076.09	2072.09	1866.1	206	570	12'-7"	16'-7"	8'-3¾"	10'-5"	54752.83	34366.06
PIER 24	2084.75	2076.15	2072.15	1866.2	206	570	12'-7¼"	16'-7¾"	8'-4"	10'-5"	54668.11	34426.38
PIER 25	2084.81	2076.21	2072.21	1866.2	206	570	12'-7¼"	16'-8½"	8'-4"	10'-5¼"	54583.38	34486.69
PIER 26	2084.88	2076.27	2072.27	1866.3	206	570	12'-7¼"	16'-9¼"	8'-4¼"	10'-5¼"	54498.66	34547.00
PIER 27	2084.94	2076.33	2072.33	1866.3	206	570	12'-7¼"	16'-10"	8'-4¼"	10'-5½"	54413.93	34607.32
PIER 28	2085.01	2076.40	2072.40	1866.4	206	570	12'-7¼"	16'-10¾"	8'-4¼"	10'-5¾"	54329.21	34667.63
PIER 29	2085.07	2076.46	2072.46	1866.5	206	570	12'-7½"	16'-11½"	8'-4½"	10'-6"	54244.49	34727.94
PIER 30	2085.14	2076.52	2072.52	1866.5	206	570	12'-7½"	17'-0¼"	8'-4½"	10'-6"	54159.76	34788.26
PIER 31	2085.20	2076.58	2072.58	1866.6	206	570	12'-7½"	17'-1"	8'-4½"	10'-6¼"	54075.04	34848.57
PIER 32	2085.27	2077.39 / 2076.64	2072.64	1882.6	190	505	12'-7¼"	17'-1¾"	8'-4¾"	10'-6½"	53990.31	34908.88
PIER 33	2085.31	2077.44	2073.44	1873.4	200	430	11'-10½"	17'-11¼"	8'-6"	10'-8¾"	53928.46	34952.91
PIER 34	2085.36	2077.48	2073.48	1873.5	200	430	11'-10½"	17'-11¾"	8'-6"	10'-9"	53866.62	34996.94
PIER 35	2085.41	2077.52 / 2076.77	2072.77	1887.8	185	505	12'-7¾"	17'-3¼"	8'-5"	10'-6¾"	53804.77	35040.96
PIER 36	2085.47	2076.84	2072.84	1887.8	185	570	12'-7½"	17'-4"	8'-5"	10'-7"	53720.05	35101.28
PIER 37	2085.54	2076.90	2072.90	1887.9	185	570	12'-7¾"	17'-4¾"	8'-5"	10'-7¼"	53635.32	35161.59
PIER 38	2085.60	2076.96	2072.96	1888.0	185	570	12'-7¾"	17'-5½"	8'-5¼"	10'-7¼"	53550.60	35221.91
PIER 39	2085.60	2077.77 / 2077.02	2073.02	1928.0	145	505	12'-7"	17'-6¼"	8'-5¼"	10'-7½"	53465.87	35282.22
PIER 40	2085.53	2077.78	2073.78	1938.8	135	430	11'-9"	18'-3¼"	8'-6½"	10'-9¾"	53404.03	35326.25
PIER 41	2085.42	2077.59	2073.59	1938.6	135	430	11'-10"	18'-1"	8'-6"	10'-9¼"	53342.18	35370.27
PIER 42	2085.22	2077.40 / 2076.65	2072.65	1972.7	100	505	12'-6¾"	17'-1¾"	8'-4¾"	10'-6½"	53280.33	35414.30
PIER 43	2084.95	2076.39	2072.39	1967.4	105	570	12'-6¾"	16'-10¾"	8'-4¼"	10'-5¾"	53195.61	35474.61
PIER 44	2084.68	2076.13	2072.13	1962.1	110	570	12'-6½"	16'-7½"	8'-4"	10'-5"	53110.89	35534.93
PIER 45	2084.42	2075.87	2071.87	1961.9	110	570	12'-6½"	16'-4½"	8'-3½"	10'-4"	53026.16	35595.24
PIER 46	2084.15	2075.61	2071.61	1961.6	110	570	12'-6½"	16'-1¼"	8'-3"	10'-3¼"	52941.44	35655.55
PIER 47	2083.88	2075.35	2071.35	1936.4	135	570	12'-6¼"	15'-10¼"	8'-2¾"	10'-2½"	52856.71	35715.87
PIER 48	2083.61	2075.09	2071.09	1936.1	135	570	12'-6¼"	15'-7"	8'-2½"	10'-1¾"	52771.99	35776.18
PIER 49	2083.35	2074.83	2070.83	1935.8	135	570	12'-6¼"	15'-4"	8'-2"	10'-1"	52687.26	35836.50
ABUT. 50	2083.08	2074.57	2070.57	1960.6	110	445	12'-6"	-	-	-	52602.40	35896.91

36" DIA. PILE x ¾" WALL, OPEN ENDED

36" DIA. PILE x ¾" WALL, CLOSED END

Preliminary Draft Not for Agency Review

PILE NOTES:

1. PILES SHALL BE DRIVEN TO REFUSAL, IF POSSIBLE OR TO A MINIMUM ULTIMATE RESISTANCE SHOWN IN THE TABLE AS DETERMINED BY THE MODIFIED ENGINEERING NEWS RECORD FORMULA AS PER THE BNSF ENGINEERING INSTRUCTIONS 17.2.6.
2. ESTIMATED PILE LENGTH BELOW CUTOFF = VARIES. TO BE VERIFIED ACCORDINGLY BY ONSITE GEOTECHNICAL ENGINEER AND PILE DRIVING EQUIPMENT APPROVED BY THE ENGINEER.
3. PILE SPACINGS SHOWN ARE AT PILE CUTOFF ELEVATIONS.
4. SYMBOL ←X:12 DENOTES DIRECTION AND AMOUNT OF PILE BATTER.
5. USE TEMPLATE TO ENSURE PILE LOCATION DURING DRIVING IS REQUIRED.
6. TO ESTIMATE THE AMOUNT OF TIME NEEDED AFTER DRIVING UNTIL THE PILES CAN BE LOADED, A DYNAMIC MEASUREMENT AND ANALYSIS SHALL BE DONE ON (1) ONE TEST PILE AT EACH PIER AND ABUTMENT.
7. DYNAMIC MEASUREMENTS USING A PILE DRIVING ANALYZER (PDA) SHALL BE TAKEN WITH CAPWAP ANALYSES AND SHALL BE COMPLETED ON A MINIMUM OF (1) ONE PRODUCTION PILE AT EACH PIER AND ABUTMENT, (50) FIFTY TOTAL (MINIMUM).
8. AN EPOXY PROTECTIVE COATING, SHALL BE APPLIED TO THE PILE SURFACE FROM PILE CUTOFF TO GROUNDLINE TO REDUCE CORROSION. PROTECTIVE COATING SHALL BE APPLIED AFTER ALL WELDING HAS BEEN COMPLETED.
9. SEE PLAN NO. 0045-0003.900-024 THROUGH 0045-0003.900-027 FOR LOCATION OF BRACING HEIGHT.
10. CLOSED END PIPES WILL BE SUBJECT TO BUOYANCY ISSUES DURING DRIVING PRIOR TO EMBEDMENT IN SAND. COST TO SECURE PILE WILL BE INCIDENTAL TO STEEL PIPE PILE (CLOSED END).

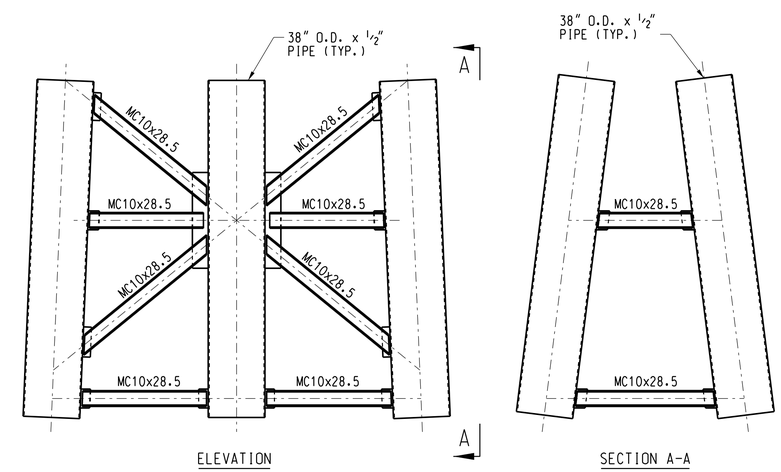

ALTERNATE BRACING DETAIL - PILE DRIVING TEMPLATE

CONNECT CHANNELS TO SLEEVE AS SHOWN ON TYPICAL SECTIONS

90% SUBMITTAL
NOT FOR CONSTRUCTION
AUGUST 24, 2018

HANSON
Hanson Professional Services Inc.

DES:	TJH
DRAWN:	GTJ
CHECK:	MAF
DATE:	AUG 2018
AUTH:	XXX-XXXX
LINE SEG:	0045

BNSF RAILWAY
BRIDGE ENGINEERING KANSAS CITY, KS
APPROVED:
ASST. DIRECTOR STRUCTURES DESIGN

SANDPOINT JCT. TO LAKESIDE JCT.
BRIDGE NUMBER 3.9
OVER LAKE PEND OREILLE NEAR SANDPOINT, ID
TABLE OF ELEVATIONS & PILE NOTES

PLAN NO: 0045-0003.900-022 | SHEET: 22 OF 56

File Location: U:\Projects\HRDOSTC\CAD\Structl\Sheet\0003900022.dgn
Date Printed: 8/30/2018 Time Printed: 10:36:26 AM

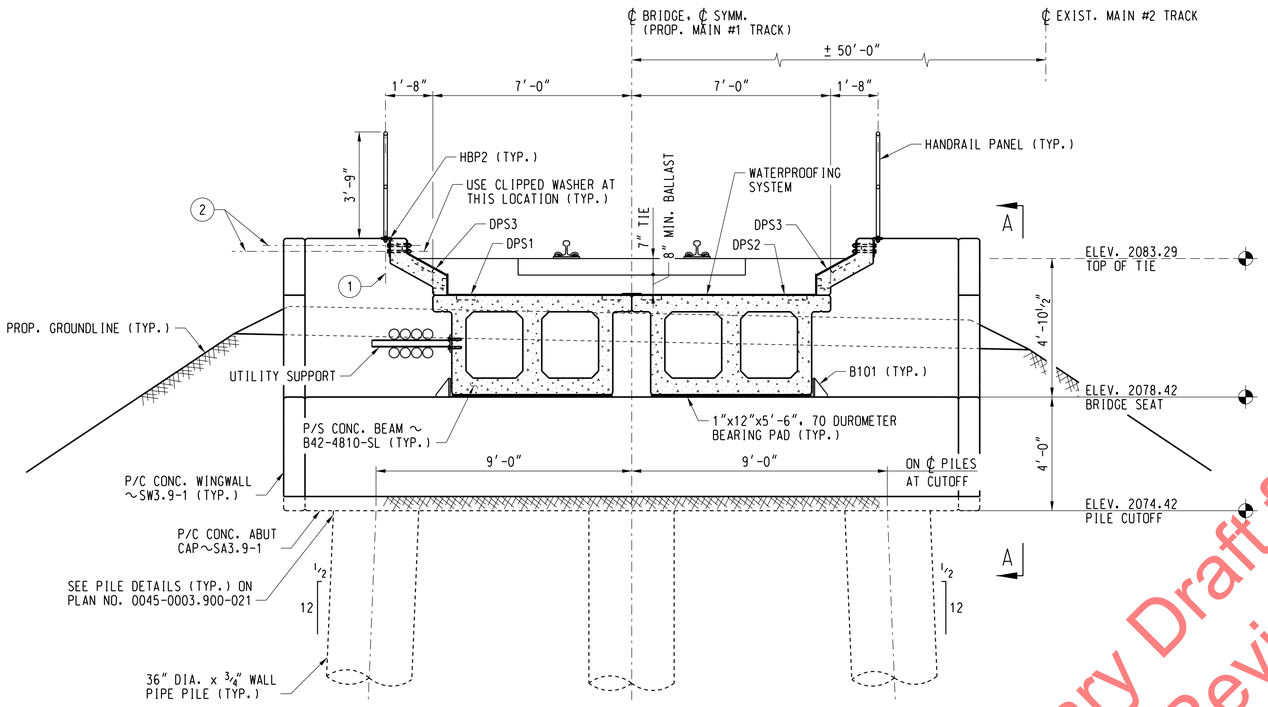

TYPICAL SECTION - ABUT. #1

(LOOKING RY EAST)

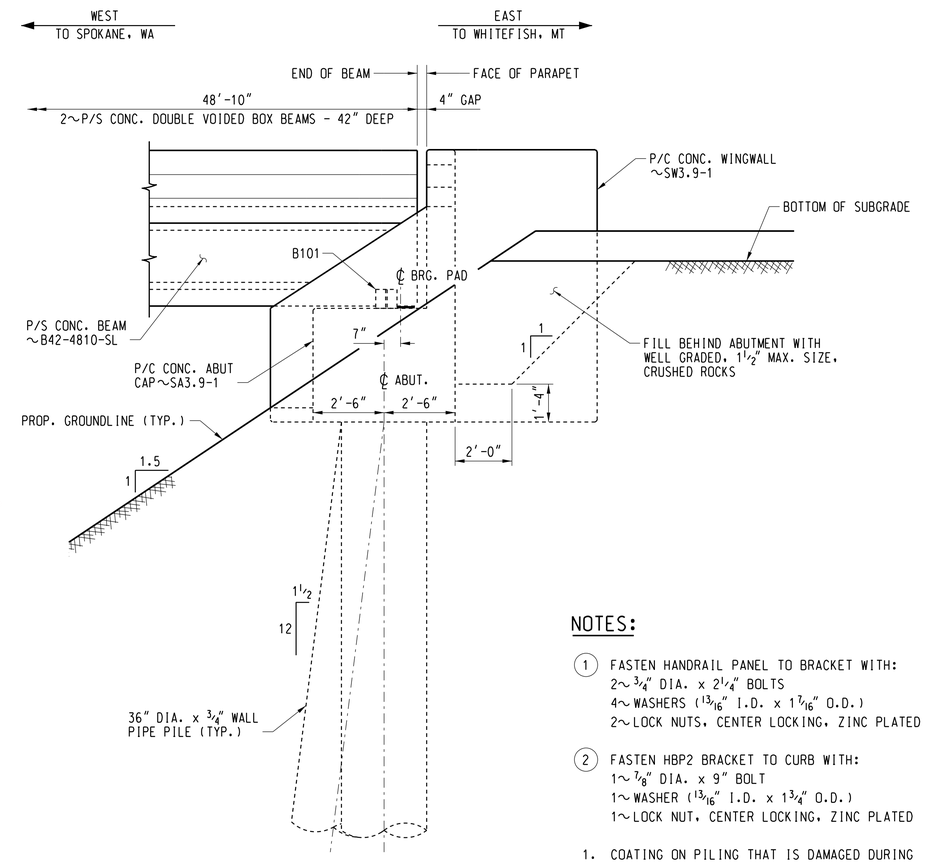

VIEW A-A

HANDRAIL PANELS NOT SHOWN FOR CLARITY.

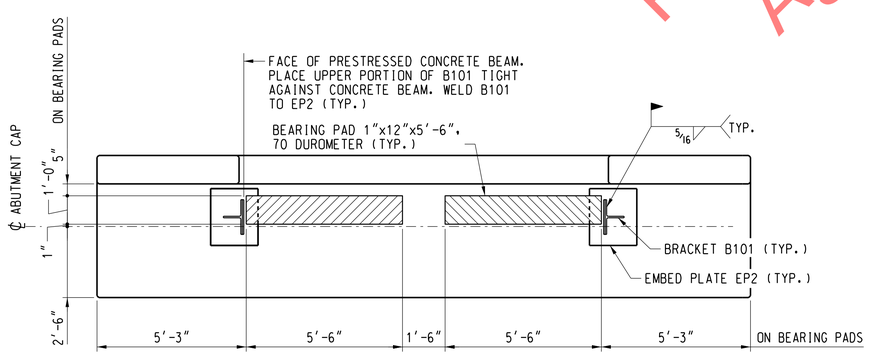

TYPICAL B101 ATTACHMENT DETAILS - ABUT. 1

Preliminary Draft for Agency Review

NOTES:

1. FASTEN HANDRAIL PANEL TO BRACKET WITH:
   2~ ¾" DIA. x 2¼" BOLTS
   4~ WASHERS (13/16" I.D. x 1 7/16" O.D.)
   2~ LOCK NUTS, CENTER LOCKING, ZINC PLATED
2. FASTEN HBP2 BRACKET TO CURB WITH:
   1~ ⅞" DIA. x 9" BOLT
   1~ WASHER (13/16" I.D. x 1¾" O.D.)
   1~ LOCK NUT, CENTER LOCKING, ZINC PLATED

1. COATING ON PILING THAT IS DAMAGED DURING CONSTRUCTION SHALL BE REPAIRED WITH SIMILAR COATING AND APPLICATION PROCEDURES.
2. FOR ELEVATION CHART SEE PLAN NO. 0045-0003.900-022.
3. FOR UTILITY SUPPORT DETAILS SEE PLAN NO. 0045-0003.900-054.

90% SUBMITTAL
NOT FOR CONSTRUCTION
AUGUST 24, 2018

DES: TJH	BNSF RAILWAY	SANDPOINT JCT. TO LAKESIDE JCT.
DRAWN: GTJ	BRIDGE ENGINEERING KANSAS CITY, KS	BRIDGE NUMBER 3.9
CHECK: MAF		OVER LAKE PEND OREILLE NEAR SANDPOINT, ID
DATE: AUG 2018		TYPICAL SECTION - ABUT. #1
AUTH: XXX-XXXX	APPROVED:	
LINE SEG: 0045	ASST. DIRECTOR STRUCTURES DESIGN	PLAN NO: 0045-0003.900-023 SHEET: 23 OF 56

HANSON
Hanson Professional Services Inc.

File Location: I:\14jobs\14R0057\CAD\Struct\Sheet\0003900023.dgn

Date Printed: 8/30/2018 Time Printed: 10:36:27 AM

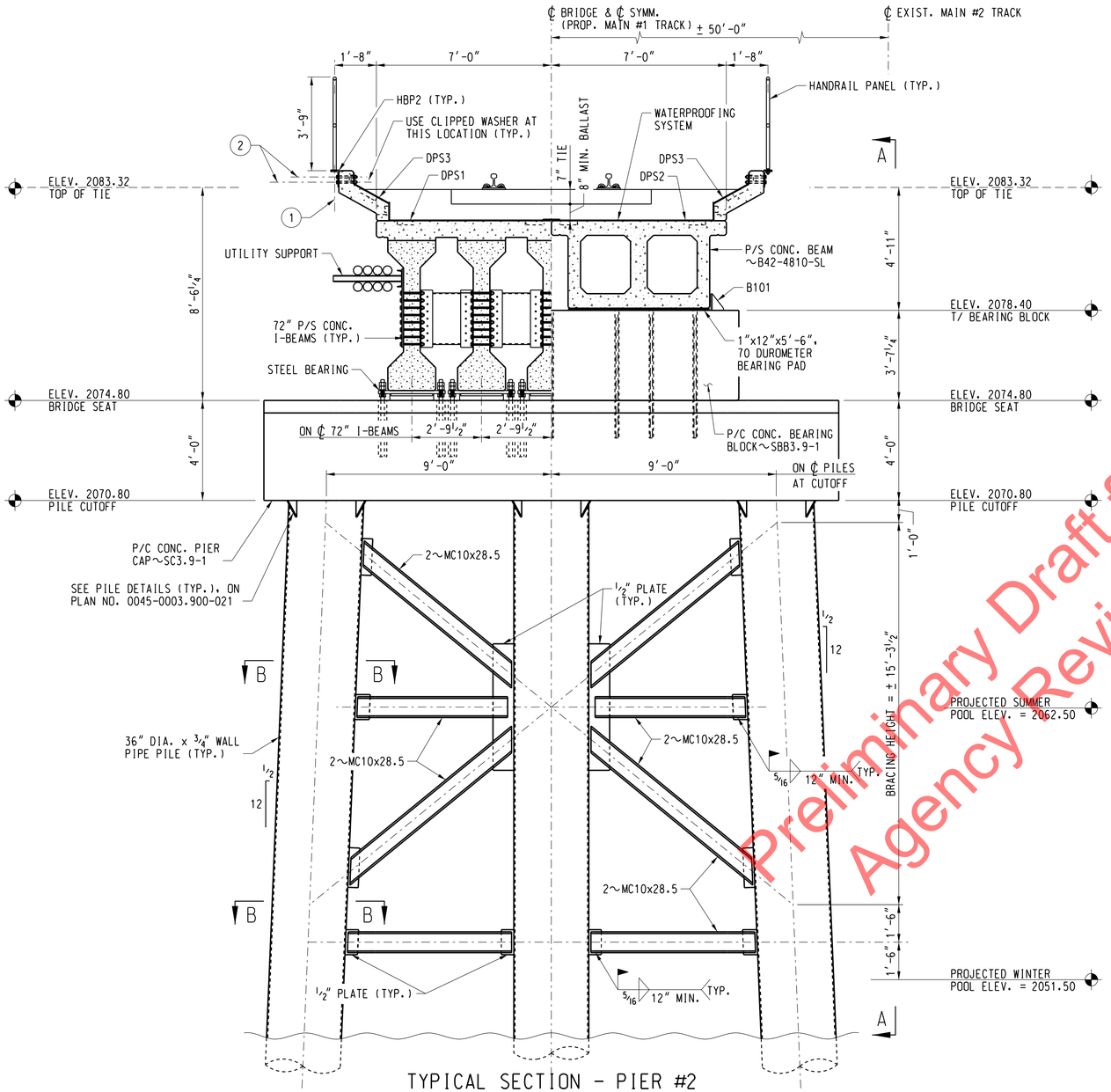

TYPICAL SECTION - PIER #2

(LOOKING RY EAST)

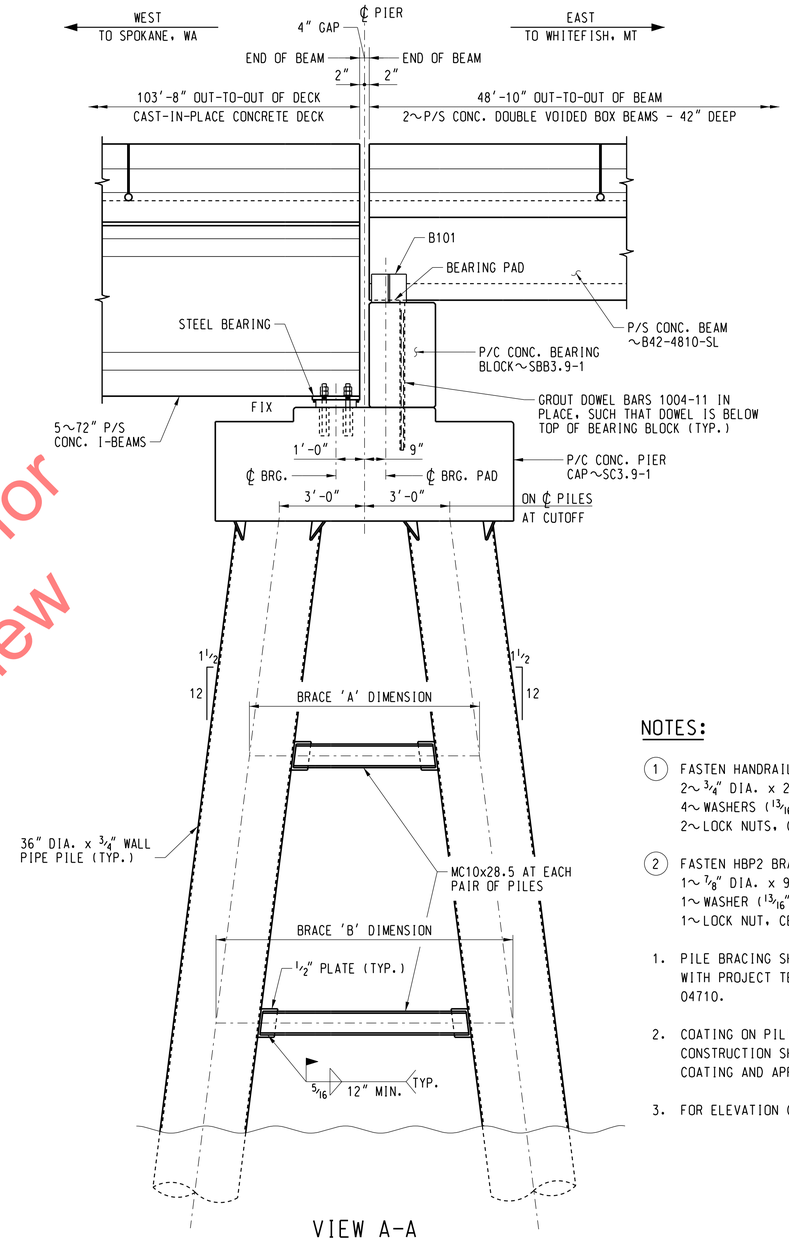

VIEW A-A

HANDRAIL PANELS NOT SHOWN FOR CLARITY.

NOTES:

(1) FASTEN HANDRAIL PANEL TO BRACKET WITH:
2~ ¾" DIA. x 2¼" BOLTS
4~ WASHERS (13/16" I.D. x 1 7/16" O.D.)
2~ LOCK NUTS, CENTER LOCKING, ZINC PLATED

(2) FASTEN HBP2 BRACKET TO CURB WITH:
1~ ⅞" DIA. x 9" BOLT
1~ WASHER (13/16" I.D. x 1¾" O.D.)
1~ LOCK NUT, CENTER LOCKING, ZINC PLATED

1. PILE BRACING SHALL BE PAINTED IN ACCORDANCE WITH PROJECT TECHNICAL SPECIFICATION SECTION 04710.
2. COATING ON PILING THAT IS DAMAGED DURING CONSTRUCTION SHALL BE REPAIRED WITH SIMILAR COATING AND APPLICATION PROCEDURES.
3. FOR ELEVATION CHART SEE PLAN NO. 0045-0003.900-022.

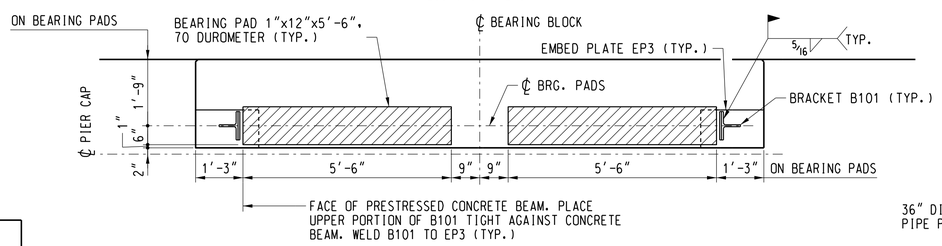

TYPICAL B101 ATTACHMENT DETAILS - BEARING BLOCK SBB3.9-1

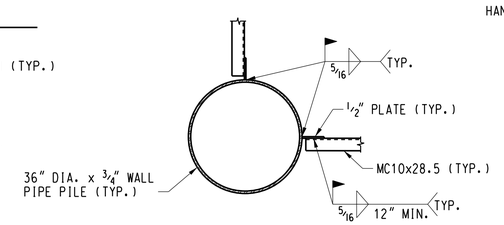

SECTION B-B

90% SUBMITTAL
NOT FOR CONSTRUCTION
AUGUST 24, 2018

DES:	TJH
DRAWN:	GTJ
CHECK:	MAF
DATE:	AUG 2018
AUTH:	XXX-XXXX
LINE SEG:	0045

BNSF RAILWAY
BRIDGE ENGINEERING KANSAS CITY, KS
APPROVED:
ASST. DIRECTOR STRUCTURES DESIGN

SANDPOINT JCT. TO LAKESIDE JCT.
BRIDGE NUMBER 3.9
OVER LAKE PEND OREILLE NEAR SANDPOINT, ID
TYPICAL SECTION - PIER #2

PLAN NO: 0045-0003.900-024 | SHEET: 24 OF 56

HANSON
Hanson Professional Services Inc.

Preliminary Draft for Agency Review

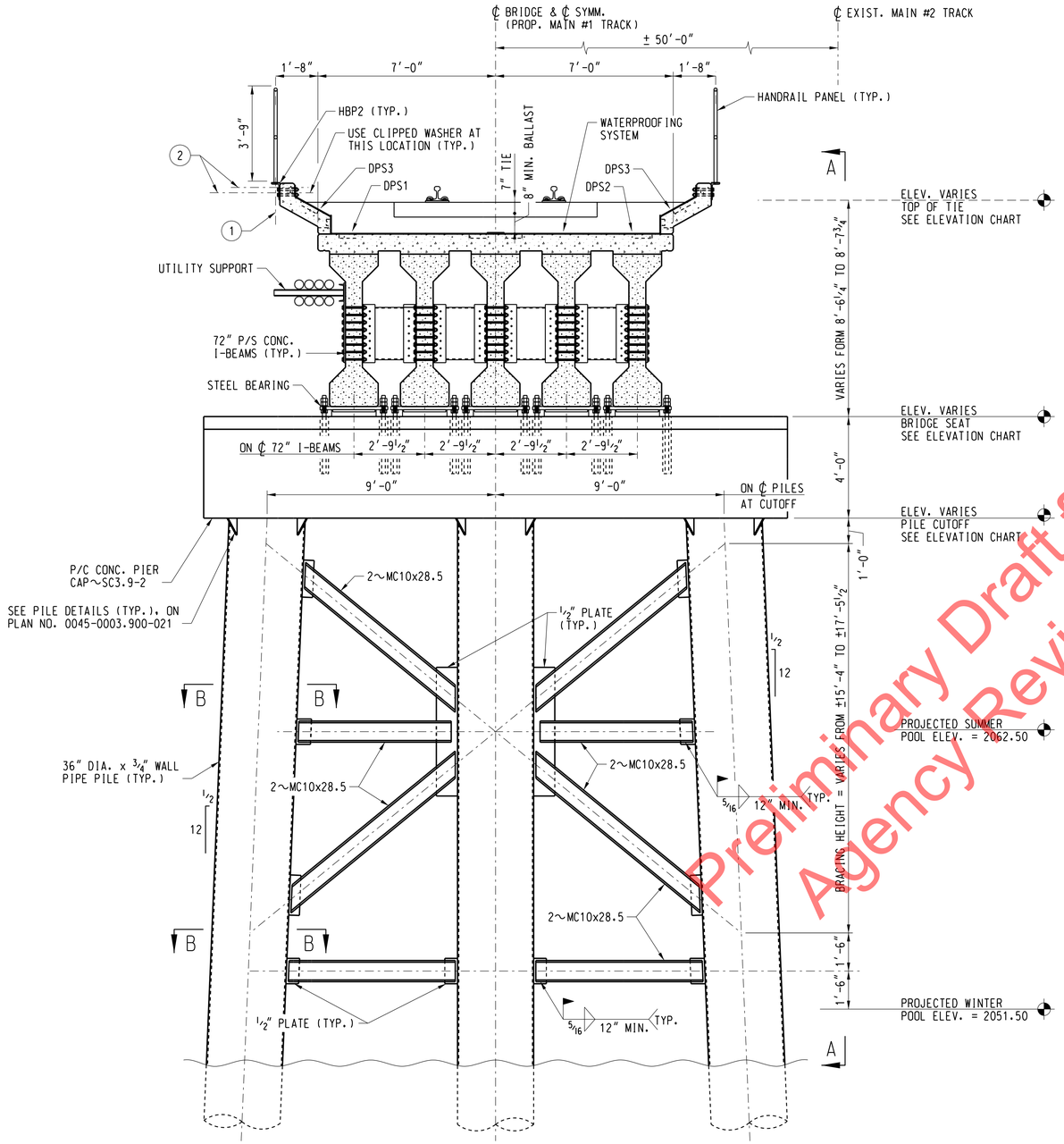

TYPICAL SECTION

PIER #3 THRU #31, #36 THRU #38 & #43 THRU #49

(LOOKING RY EAST)

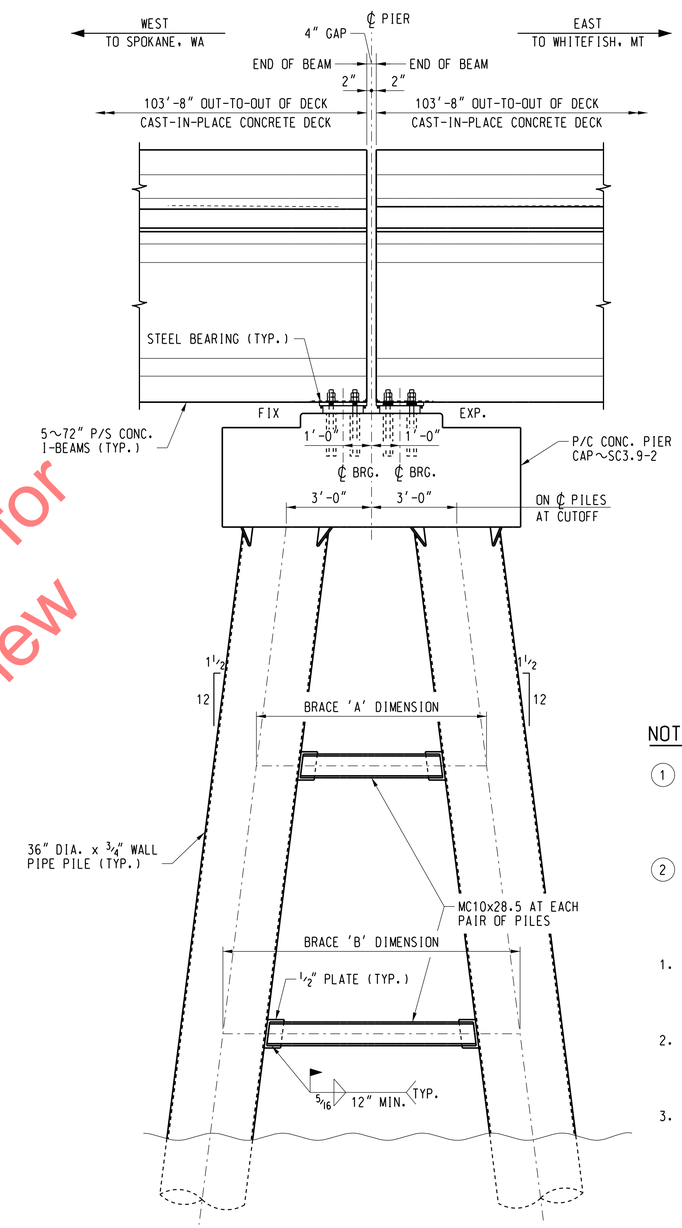

VIEW A-A

HANDRAIL PANELS NOT SHOWN FOR CLARITY.

NOTE:

FOR SECTION B-B, SEE PLAN NO. 0045-0003.900-024.

NOTES:

1. FASTEN HANDRAIL PANEL TO BRACKET WITH:
   2~¾" DIA. x 2¼" BOLTS
   4~WASHERS (13/16" I.D. x 1 7/16" O.D.)
   2~LOCK NUTS, CENTER LOCKING, ZINC PLATED
2. FASTEN HBP2 BRACKET TO CURB WITH:
   1~⅞" DIA. x 9" BOLT
   1~WASHER (13/16" I.D. x 1¾" O.D.)
   1~LOCK NUT, CENTER LOCKING, ZINC PLATED

1. PILE BRACING SHALL BE PAINTED IN ACCORDANCE WITH PROJECT TECHNICAL SPECIFICATION SECTION 04710.
2. COATING ON PILING THAT IS DAMAGED DURING CONSTRUCTION SHALL BE REPAIRED WITH SIMILAR COATING AND APPLICATION PROCEDURES.
3. FOR ELEVATION CHART SEE PLAN NO. 0045-0003.900-022.

90% SUBMITTAL
NOT FOR CONSTRUCTION
AUGUST 24, 2018

Preliminary Draft for Agency Review

DES:	TJH
DRAWN:	GTJ
CHECK:	MAF
DATE:	AUG 2018
AUTH:	XXX-XXXX
LINE SEG:	0045

BNSF RAILWAY
BRIDGE ENGINEERING KANSAS CITY, KS
APPROVED:
ASST. DIRECTOR STRUCTURES DESIGN

SANDPOINT JCT. TO LAKESIDE JCT.
BRIDGE NUMBER 3.9
OVER LAKE PEND OREILLE NEAR SANDPOINT, ID
TYPICAL SECTION - PIERS #3 THRU #31, #36 THRU #38 & #43 THRU #49

PLAN NO: 0045-0003.900-025 SHEET: 25 OF 56

HANSON
Hanson Professional Services Inc.

File Location: I:\1-Jobs\14R0057\CAD\Struct\Sheet\0003900025.dgn

Date Printed: 8/30/2018 Time Printed: 10:36:29 AM

USCG0011353/27

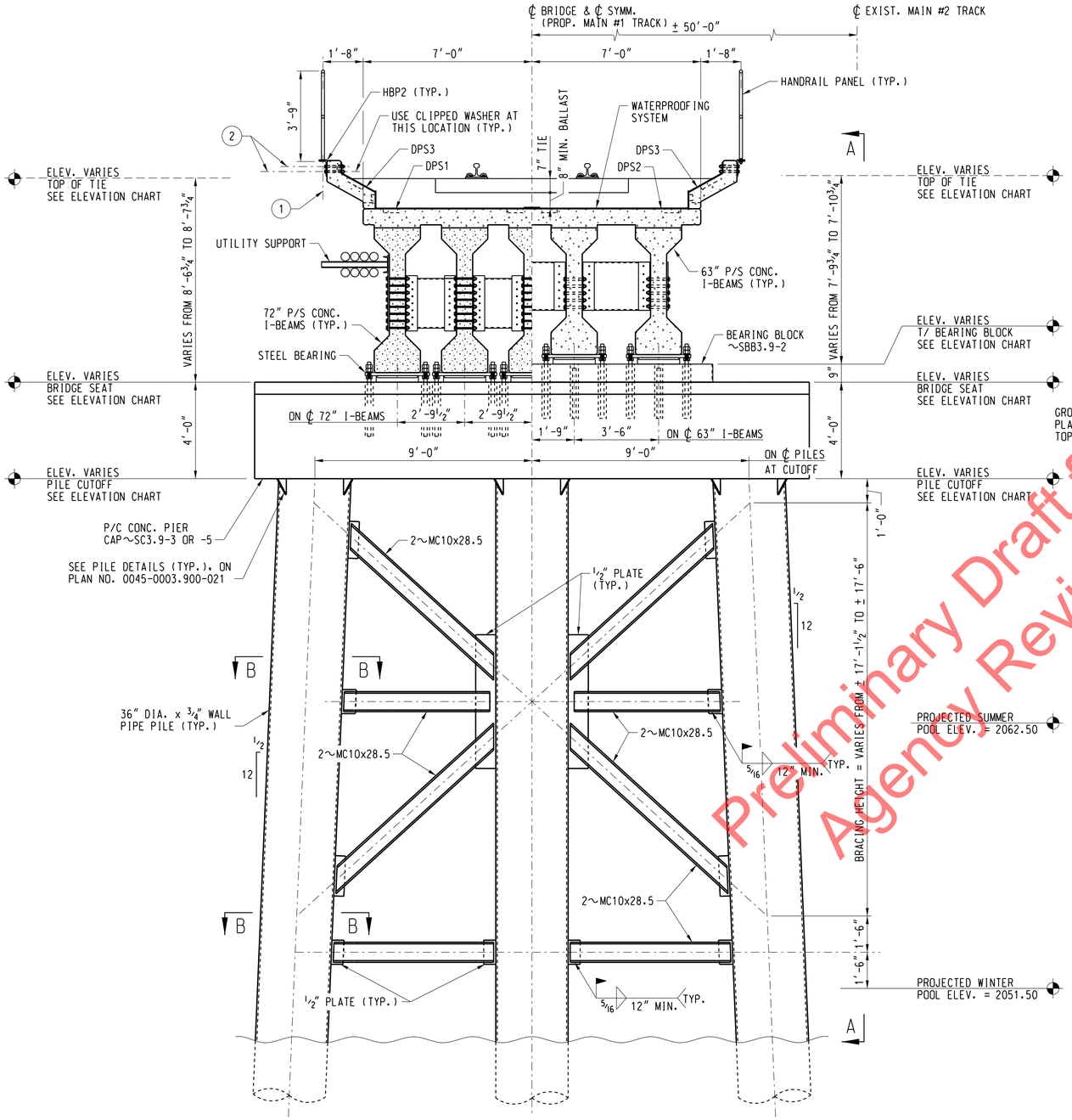

TYPICAL SECTION - PIERS #32, #35, #39 & #42

(LOOKING RY EAST)

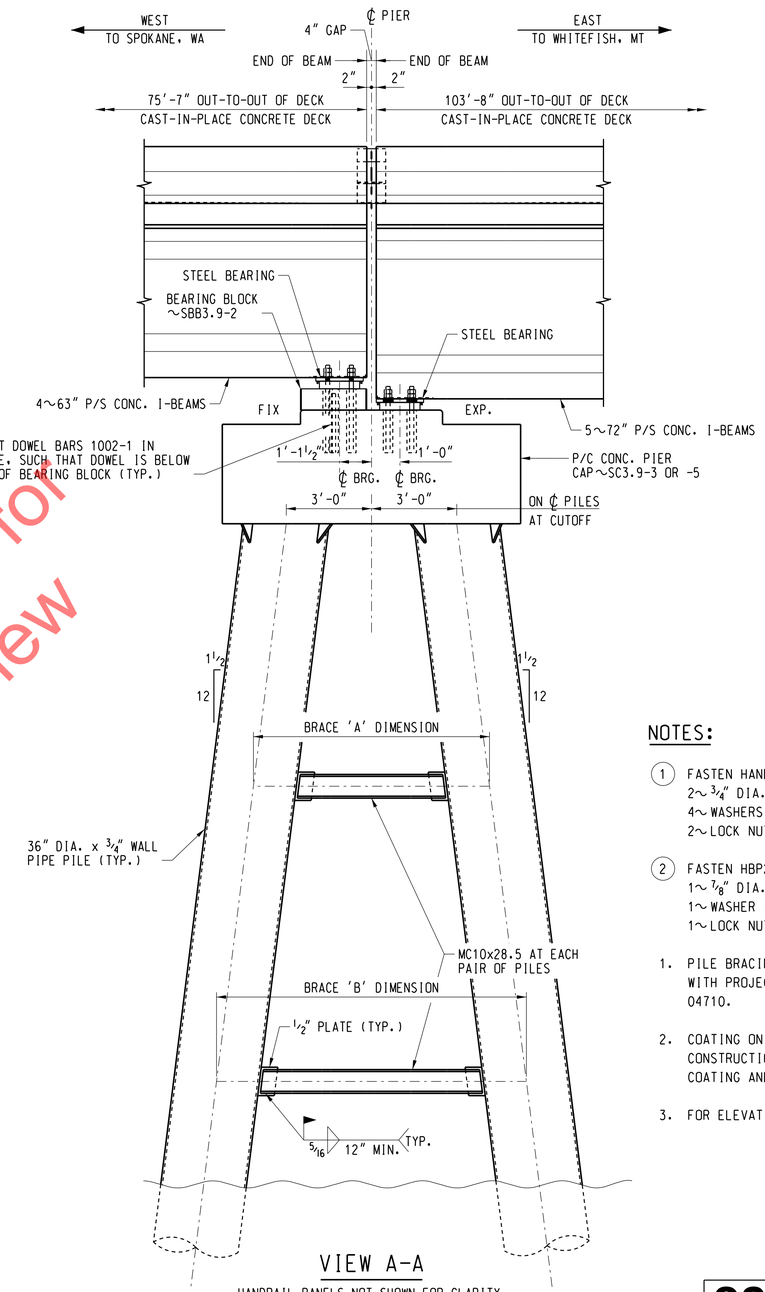

VIEW A-A

HANDRAIL PANELS NOT SHOWN FOR CLARITY.
PIERS #32 & #39 SHOWN, PIERS #35 & #42 OPP. HAND

NOTES:

(1) FASTEN HANDRAIL PANEL TO BRACKET WITH:
2~ 3/4" DIA. x 2 1/4" BOLTS
4~ WASHERS (13/16" I.D. x 1 7/16" O.D.)
2~ LOCK NUTS, CENTER LOCKING, ZINC PLATED

(2) FASTEN HBP2 BRACKET TO CURB WITH:
1~ 7/8" DIA. x 9" BOLT
1~ WASHER (13/16" I.D. x 1 3/4" O.D.)
1~ LOCK NUT, CENTER LOCKING, ZINC PLATED

1. PILE BRACING SHALL BE PAINTED IN ACCORDANCE WITH PROJECT TECHNICAL SPECIFICATION SECTION 04710.
2. COATING ON PILING THAT IS DAMAGED DURING CONSTRUCTION SHALL BE REPAIRED WITH SIMILAR COATING AND APPLICATION PROCEDURES.
3. FOR ELEVATION CHART SEE PLAN NO. 0045-0003.900-022.

NOTE:

FOR SECTION B-B, SEE PLAN NO. 0045-0003.900-024.

90% SUBMITTAL
NOT FOR CONSTRUCTION
AUGUST 24, 2018

DES:	TJH
DRAWN:	GTJ
CHECK:	MAF
DATE:	AUG 2018
AUTH:	XXX-XXXX
LINE SEG:	0045

BNSF RAILWAY
BRIDGE ENGINEERING KANSAS CITY, KS
APPROVED:
ASST. DIRECTOR STRUCTURES DESIGN

SANDPOINT JCT. TO LAKESIDE JCT.
BRIDGE NUMBER 3.9
OVER LAKE PEND OREILLE NEAR SANDPOINT, ID
TYPICAL SECTION
PIERS #32, #35, #39 & #42

PLAN NO: 0045-0003.900-026 SHEET: 26 OF 56

HANSON
Hanson Professional Services Inc.

Preliminary Draft for Agency Review

File Location: H:\Hpsis\14R005TCAD\Struct\Sheet\0003900026.dgn
Date Printed: 8/30/2018 Time Printed: 10:36:29 AM

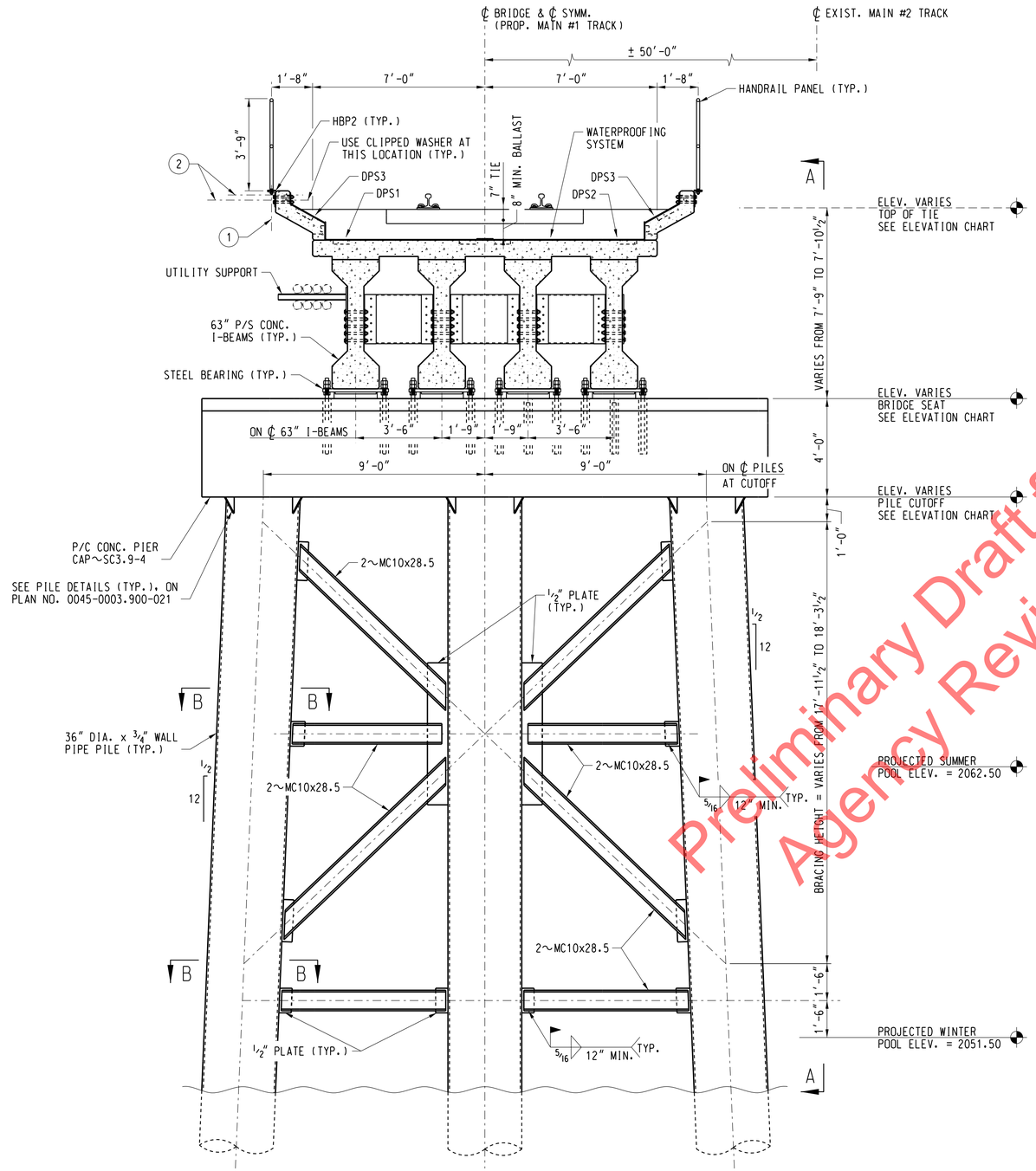

TYPICAL SECTION - PIERS #33, #34, #40 & #41

(LOOKING RY EAST)

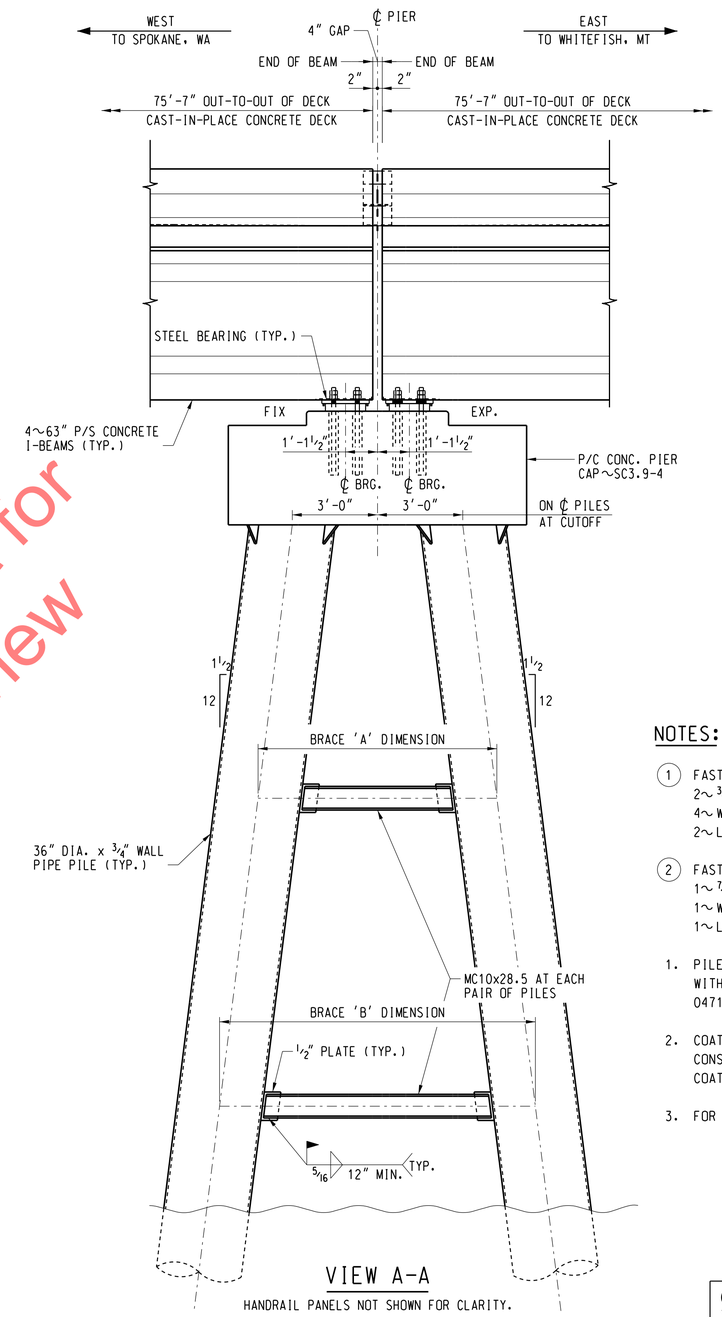

VIEW A-A

HANDRAIL PANELS NOT SHOWN FOR CLARITY.

NOTES:

(1) FASTEN HANDRAIL PANEL TO BRACKET WITH:
2~¾" DIA. x 2¼" BOLTS
4~WASHERS (13/16" I.D. x 1 7/16" O.D.)
2~LOCK NUTS, CENTER LOCKING, ZINC PLATED

(2) FASTEN HBP2 BRACKET TO CURB WITH:
1~⅞" DIA. x 9" BOLT
1~WASHER (13/16" I.D. x 1¾" O.D.)
1~LOCK NUT, CENTER LOCKING, ZINC PLATED

1. PILE BRACING SHALL BE PAINTED IN ACCORDANCE WITH PROJECT TECHNICAL SPECIFICATION SECTION 04710.
2. COATING ON PILING THAT IS DAMAGED DURING CONSTRUCTION SHALL BE REPAIRED WITH SIMILAR COATING AND APPLICATION PROCEDURES.
3. FOR ELEVATION CHART SEE PLAN NO. 0045-0003.900-022.

NOTE:

FOR SECTION B-B, SEE PLAN NO. 0045-0003.900-024.

90% SUBMITTAL
NOT FOR CONSTRUCTION
AUGUST 24, 2018

DES:	TJH
DRAWN:	GTJ
CHECK:	MAF
DATE:	AUG 2018
AUTH:	XXX-XXXX
LINE SEG:	0045

BNSF RAILWAY
BRIDGE ENGINEERING KANSAS CITY, KS
APPROVED:
ASST. DIRECTOR STRUCTURES DESIGN

SANDPOINT JCT. TO LAKESIDE JCT.
BRIDGE NUMBER 3.9
OVER LAKE PEND OREILLE NEAR SANDPOINT, ID
TYPICAL SECTIONS
PIERS #33, #34, #40 & #41

PLAN NO: 0045-0003.900-027 SHEET: 27 OF 56

HANSON
Hanson Professional Services Inc.

Preliminary Draft for Agency Review

Preliminary Draft for Agency Review

Attachment G: Hydraulic Cross-Section Map

USCG0011383/27

Legend

- XS
- Lake Pend Oreille
- Banks
- Ineffective

BNSF Bridge 3.9 (53484)
(Combined Existing and Proposed)

Highway 95 (46619)

11603
13088
19804
21637
24647
27007
30094
34906
32258
39639
46086
54839
53516
62890
70406
78214
86829

Preliminary Draft for Agency Review

1 in = 7,350 ft

0 3,675 7,350 11,025 Feet

N W E S

Coordinate System: NAD 1983 HARN StatePlane Idaho West FIPS 1103 Feet

HANSON
Hanson Professional Services Inc.

Cross-Section Location Map

BNSF Railway Company
Bridge 3.9 Over Lake Pend Oreille
Sandpoint, Idaho

Job Number: 14R0057

I:\14jobs\14R0057\CAD\GIS\Projects\XS Location Map_Pend Oreille.mxd

Preliminary Draft for Agency Review

Attachment H: HEC-RAS Output

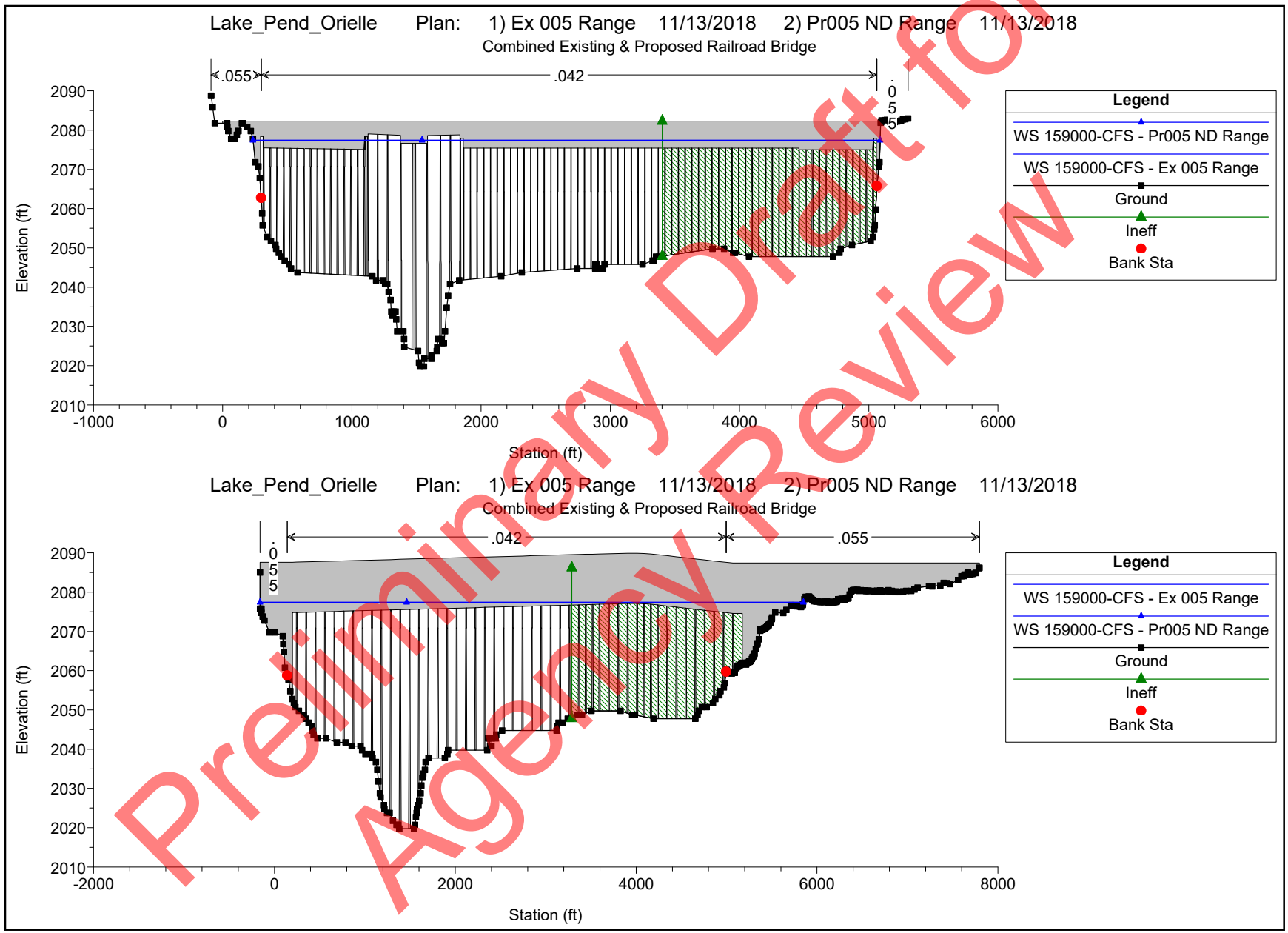

Preliminary Draft for Agency Review

			Existing Conditions			Proposed Conditions			Change	
Reach	River Sta	Profile	Q Total	W.S. Elev	Vel Chnl	Q Total	W.S. Elev	Vel Chnl	W.S. Elev	Vel Chnl
			(cfs)	(ft)	(ft/s)	(cfs)	(ft)	(ft/s)	(ft)	(ft/s)
Main Reach	86829	10000-CFS	10000	2050.6	0.01	10000	2050.6	0.01	0.0	0
Main Reach	86829	20000-CFS	20000	2052.2	0.03	20000	2052.2	0.03	0.0	0
Main Reach	86829	30000-CFS	30000	2053.1	0.04	30000	2053.1	0.04	0.0	0
Main Reach	86829	40000-CFS	40000	2054.7	0.05	40000	2054.7	0.05	0.0	0
Main Reach	86829	50000-CFS	50000	2057.2	0.06	50000	2057.2	0.06	0.0	0
Main Reach	86829	60000-CFS	60000	2059.9	0.07	60000	2059.9	0.07	0.0	0
Main Reach	86829	70000-CFS	70000	2062.5	0.08	70000	2062.5	0.08	0.0	0
Main Reach	86829	80000-CFS	80000	2064.8	0.09	80000	2064.8	0.09	0.0	0
Main Reach	86829	90000-CFS	90000	2066.9	0.1	90000	2066.9	0.1	0.0	0
Main Reach	86829	100000-CFS	100000	2068.8	0.11	100000	2068.8	0.11	0.0	0
Main Reach	86829	110000-CFS	110000	2070.6	0.12	110000	2070.6	0.12	0.0	0
Main Reach	86829	115000-CFS	115000	2071.4	0.13	115000	2071.4	0.13	0.0	0
Main Reach	86829	120000-CFS	120000	2072.1	0.13	120000	2072.1	0.13	0.0	0
Main Reach	86829	130000-CFS	130000	2073.6	0.14	130000	2073.6	0.14	0.0	0
Main Reach	86829	140000-CFS	140000	2075.0	0.15	140000	2075.0	0.15	0.0	0
Main Reach	86829	150000-CFS	150000	2076.3	0.16	150000	2076.3	0.16	0.0	0
Main Reach	86829	159000-CFS	159000	2077.5	0.16	159000	2077.5	0.16	0.0	0
Main Reach	78214	10000-CFS	10000	2050.6	0.02	10000	2050.6	0.02	0.0	0
Main Reach	78214	20000-CFS	20000	2052.2	0.04	20000	2052.2	0.04	0.0	0
Main Reach	78214	30000-CFS	30000	2053.1	0.06	30000	2053.1	0.06	0.0	0
Main Reach	78214	40000-CFS	40000	2054.7	0.08	40000	2054.7	0.08	0.0	0
Main Reach	78214	50000-CFS	50000	2057.2	0.1	50000	2057.2	0.1	0.0	0
Main Reach	78214	60000-CFS	60000	2059.9	0.11	60000	2059.9	0.11	0.0	0
Main Reach	78214	70000-CFS	70000	2062.5	0.12	70000	2062.5	0.12	0.0	0
Main Reach	78214	80000-CFS	80000	2064.8	0.13	80000	2064.8	0.13	0.0	0
Main Reach	78214	90000-CFS	90000	2066.9	0.14	90000	2066.9	0.14	0.0	0
Main Reach	78214	100000-CFS	100000	2068.8	0.15	100000	2068.8	0.15	0.0	0
Main Reach	78214	110000-CFS	110000	2070.6	0.16	110000	2070.6	0.16	0.0	0
Main Reach	78214	115000-CFS	115000	2071.4	0.16	115000	2071.4	0.16	0.0	0
Main Reach	78214	120000-CFS	120000	2072.1	0.17	120000	2072.1	0.17	0.0	0
Main Reach	78214	130000-CFS	130000	2073.6	0.18	130000	2073.6	0.18	0.0	0
Main Reach	78214	140000-CFS	140000	2075.0	0.19	140000	2075.0	0.19	0.0	0
Main Reach	78214	150000-CFS	150000	2076.3	0.2	150000	2076.3	0.2	0.0	0
Main Reach	78214	159000-CFS	159000	2077.5	0.2	159000	2077.5	0.2	0.0	0
Main Reach	70406	10000-CFS	10000	2050.6	0.04	10000	2050.6	0.04	0.0	0
Main Reach	70406	20000-CFS	20000	2052.2	0.08	20000	2052.2	0.08	0.0	0
Main Reach	70406	30000-CFS	30000	2053.1	0.11	30000	2053.1	0.11	0.0	0
Main Reach	70406	40000-CFS	40000	2054.7	0.14	40000	2054.7	0.14	0.0	0
Main Reach	70406	50000-CFS	50000	2057.2	0.15	50000	2057.2	0.15	0.0	0
Main Reach	70406	60000-CFS	60000	2059.9	0.17	60000	2059.9	0.17	0.0	0
Main Reach	70406	70000-CFS	70000	2062.5	0.18	70000	2062.5	0.18	0.0	0
Main Reach	70406	80000-CFS	80000	2064.8	0.19	80000	2064.8	0.19	0.0	0
Main Reach	70406	90000-CFS	90000	2066.9	0.2	90000	2066.9	0.2	0.0	0
Main Reach	70406	100000-CFS	100000	2068.8	0.21	100000	2068.8	0.21	0.0	0
Main Reach	70406	110000-CFS	110000	2070.6	0.22	110000	2070.6	0.22	0.0	0
Main Reach	70406	115000-CFS	115000	2071.4	0.23	115000	2071.4	0.23	0.0	0
Main Reach	70406	120000-CFS	120000	2072.1	0.23	120000	2072.1	0.23	0.0	0
Main Reach	70406	130000-CFS	130000	2073.6	0.24	130000	2073.6	0.24	0.0	0
Main Reach	70406	140000-CFS	140000	2075.0	0.25	140000	2075.0	0.25	0.0	0
Main Reach	70406	150000-CFS	150000	2076.3	0.26	150000	2076.3	0.26	0.0	0
Main Reach	70406	159000-CFS	159000	2077.5	0.27	159000	2077.5	0.27	0.0	0
Main Reach	64114	10000-CFS	10000	2050.6	0.09	10000	2050.6	0.09	0.0	0
Main Reach	64114	20000-CFS	20000	2052.2	0.16	20000	2052.2	0.16	0.0	0
Main Reach	64114	30000-CFS	30000	2053.1	0.22	30000	2053.1	0.22	0.0	0
Main Reach	64114	40000-CFS	40000	2054.7	0.26	40000	2054.7	0.26	0.0	0
Main Reach	64114	50000-CFS	50000	2057.2	0.28	50000	2057.2	0.28	0.0	0
Main Reach	64114	60000-CFS	60000	2059.9	0.29	60000	2059.9	0.29	0.0	0
Main Reach	64114	70000-CFS	70000	2062.5	0.31	70000	2062.5	0.31	0.0	0
Main Reach	64114	80000-CFS	80000	2064.8	0.32	80000	2064.8	0.32	0.0	0
Main Reach	64114	90000-CFS	90000	2066.9	0.33	90000	2066.9	0.33	0.0	0
Main Reach	64114	100000-CFS	100000	2068.8	0.34	100000	2068.8	0.34	0.0	0
Main Reach	64114	110000-CFS	110000	2070.5	0.35	110000	2070.5	0.35	0.0	0
Main Reach	64114	115000-CFS	115000	2071.4	0.36	115000	2071.4	0.36	0.0	0

Preliminary Draft for Agency Review

			Existing Conditions			Proposed Conditions			Change	
Reach	River Sta	Profile	Q Total	W.S. Elev	Vel Chnl	Q Total	W.S. Elev	Vel Chnl	W.S. Elev	Vel Chnl
			(cfs)	(ft)	(ft/s)	(cfs)	(ft)	(ft/s)	(ft)	(ft/s)
Main Reach	64114	120000-CFS	120000	2072.1	0.37	120000	2072.1	0.37	0.0	0
Main Reach	64114	130000-CFS	130000	2073.6	0.38	130000	2073.6	0.38	0.0	0
Main Reach	64114	140000-CFS	140000	2075.0	0.39	140000	2075.0	0.39	0.0	0
Main Reach	64114	150000-CFS	150000	2076.3	0.41	150000	2076.3	0.41	0.0	0
Main Reach	64114	159000-CFS	159000	2077.5	0.42	159000	2077.5	0.42	0.0	0
Main Reach	62890	10000-CFS	10000	2050.6	0.09	10000	2050.6	0.09	0.0	0
Main Reach	62890	20000-CFS	20000	2052.2	0.16	20000	2052.2	0.16	0.0	0
Main Reach	62890	30000-CFS	30000	2053.1	0.23	30000	2053.1	0.23	0.0	0
Main Reach	62890	40000-CFS	40000	2054.7	0.28	40000	2054.7	0.28	0.0	0
Main Reach	62890	50000-CFS	50000	2057.1	0.3	50000	2057.1	0.3	0.0	0
Main Reach	62890	60000-CFS	60000	2059.9	0.31	60000	2059.9	0.31	0.0	0
Main Reach	62890	70000-CFS	70000	2062.5	0.32	70000	2062.5	0.32	0.0	0
Main Reach	62890	80000-CFS	80000	2064.8	0.33	80000	2064.8	0.33	0.0	0
Main Reach	62890	90000-CFS	90000	2066.9	0.34	90000	2066.9	0.34	0.0	0
Main Reach	62890	100000-CFS	100000	2068.8	0.35	100000	2068.8	0.35	0.0	0
Main Reach	62890	110000-CFS	110000	2070.5	0.37	110000	2070.5	0.37	0.0	0
Main Reach	62890	115000-CFS	115000	2071.3	0.37	115000	2071.4	0.37	0.0	0
Main Reach	62890	120000-CFS	120000	2072.1	0.38	120000	2072.1	0.38	0.0	0
Main Reach	62890	130000-CFS	130000	2073.6	0.39	130000	2073.6	0.39	0.0	0
Main Reach	62890	140000-CFS	140000	2075.0	0.41	140000	2075.0	0.41	0.0	0
Main Reach	62890	150000-CFS	150000	2076.3	0.42	150000	2076.3	0.42	0.0	0
Main Reach	62890	159000-CFS	159000	2077.5	0.43	159000	2077.5	0.43	0.0	0
Main Reach	59294	10000-CFS	10000	2050.6	0.11	10000	2050.6	0.11	0.0	0
Main Reach	59294	20000-CFS	20000	2052.2	0.2	20000	2052.2	0.2	0.0	0
Main Reach	59294	30000-CFS	30000	2053.1	0.28	30000	2053.1	0.28	0.0	0
Main Reach	59294	40000-CFS	40000	2054.7	0.35	40000	2054.7	0.35	0.0	0
Main Reach	59294	50000-CFS	50000	2057.1	0.39	50000	2057.1	0.39	0.0	0
Main Reach	59294	60000-CFS	60000	2059.9	0.41	60000	2059.9	0.41	0.0	0
Main Reach	59294	70000-CFS	70000	2062.5	0.44	70000	2062.5	0.44	0.0	0
Main Reach	59294	80000-CFS	80000	2064.8	0.46	80000	2064.8	0.46	0.0	0
Main Reach	59294	90000-CFS	90000	2066.9	0.48	90000	2066.9	0.48	0.0	0
Main Reach	59294	100000-CFS	100000	2068.8	0.5	100000	2068.8	0.5	0.0	0
Main Reach	59294	110000-CFS	110000	2070.5	0.53	110000	2070.5	0.53	0.0	0
Main Reach	59294	115000-CFS	115000	2071.3	0.54	115000	2071.3	0.54	0.0	0
Main Reach	59294	120000-CFS	120000	2072.1	0.55	120000	2072.1	0.55	0.0	0
Main Reach	59294	130000-CFS	130000	2073.6	0.57	130000	2073.6	0.57	0.0	0
Main Reach	59294	140000-CFS	140000	2075.0	0.6	140000	2075.0	0.6	0.0	0
Main Reach	59294	150000-CFS	150000	2076.3	0.62	150000	2076.3	0.62	0.0	0
Main Reach	59294	159000-CFS	159000	2077.5	0.64	159000	2077.5	0.64	0.0	0
Main Reach	54839	10000-CFS	10000	2050.6	0.32	10000	2050.6	0.32	0.0	0
Main Reach	54839	20000-CFS	20000	2052.2	0.57	20000	2052.2	0.57	0.0	0
Main Reach	54839	30000-CFS	30000	2053.1	0.8	30000	2053.1	0.8	0.0	0
Main Reach	54839	40000-CFS	40000	2054.6	0.96	40000	2054.6	0.96	0.0	0
Main Reach	54839	50000-CFS	50000	2057.1	1.04	50000	2057.1	1.04	0.0	0
Main Reach	54839	60000-CFS	60000	2059.9	1.08	60000	2059.9	1.08	0.0	0
Main Reach	54839	70000-CFS	70000	2062.4	1.12	70000	2062.4	1.12	0.0	0
Main Reach	54839	80000-CFS	80000	2064.7	1.16	80000	2064.7	1.16	0.0	0
Main Reach	54839	90000-CFS	90000	2066.8	1.21	90000	2066.8	1.21	0.0	0
Main Reach	54839	100000-CFS	100000	2068.8	1.25	100000	2068.8	1.25	0.0	0
Main Reach	54839	110000-CFS	110000	2070.5	1.3	110000	2070.5	1.3	0.0	0
Main Reach	54839	115000-CFS	115000	2071.3	1.32	115000	2071.3	1.32	0.0	0
Main Reach	54839	120000-CFS	120000	2072.1	1.35	120000	2072.1	1.35	0.0	0
Main Reach	54839	130000-CFS	130000	2073.5	1.4	130000	2073.5	1.4	0.0	0
Main Reach	54839	140000-CFS	140000	2074.9	1.44	140000	2074.9	1.44	0.0	0
Main Reach	54839	150000-CFS	150000	2076.3	1.49	150000	2076.3	1.49	0.0	0
Main Reach	54839	159000-CFS	159000	2077.4	1.53	159000	2077.4	1.53	0.0	0
Main Reach	53516	10000-CFS	10000	2050.6	0.36	10000	2050.6	0.36	0.0	0
Main Reach	53516	20000-CFS	20000	2052.2	0.61	20000	2052.2	0.61	0.0	0
Main Reach	53516	30000-CFS	30000	2053.1	0.85	30000	2053.1	0.84	0.0	-0.01
Main Reach	53516	40000-CFS	40000	2054.6	0.99	40000	2054.6	0.99	0.0	0
Main Reach	53516	50000-CFS	50000	2057.1	1.04	50000	2057.1	1.04	0.0	0
Main Reach	53516	60000-CFS	60000	2059.9	1.06	60000	2059.9	1.06	0.0	0

Preliminary Draft for Agency Review

			Existing Conditions			Proposed Conditions			Change	
Reach	River Sta	Profile	Q Total	W.S. Elev	Vel Chnl	Q Total	W.S. Elev	Vel Chnl	W.S. Elev	Vel Chnl
			(cfs)	(ft)	(ft/s)	(cfs)	(ft)	(ft/s)	(ft)	(ft/s)
Main Reach	53516	70000-CFS	70000	2062.4	1.09	70000	2062.4	1.09	0.0	0
Main Reach	53516	80000-CFS	80000	2064.7	1.12	80000	2064.7	1.12	0.0	0
Main Reach	53516	90000-CFS	90000	2066.8	1.15	90000	2066.8	1.15	0.0	0
Main Reach	53516	100000-CFS	100000	2068.7	1.19	100000	2068.7	1.19	0.0	0
Main Reach	53516	110000-CFS	110000	2070.5	1.23	110000	2070.5	1.23	0.0	0
Main Reach	53516	115000-CFS	115000	2071.3	1.25	115000	2071.3	1.25	0.0	0
Main Reach	53516	120000-CFS	120000	2072.0	1.27	120000	2072.0	1.27	0.0	0
Main Reach	53516	130000-CFS	130000	2073.5	1.31	130000	2073.5	1.31	0.0	0
Main Reach	53516	140000-CFS	140000	2074.9	1.36	140000	2074.9	1.36	0.0	0
Main Reach	53516	150000-CFS	150000	2076.2	1.4	150000	2076.2	1.4	0.0	0
Main Reach	53516	159000-CFS	159000	2077.4	1.43	159000	2077.4	1.43	0.0	0
Main Reach	ExistBNSF Bridg	10000-CFS	10000	2050.6	0.42	10000	2050.6	0.42	0.0	0
Main Reach	ExistBNSF Bridg	20000-CFS	20000	2052.2	0.72	20000	2052.2	0.72	0.0	0
Main Reach	ExistBNSF Bridg	30000-CFS	30000	2053.1	0.99	30000	2053.1	0.99	0.0	0
Main Reach	ExistBNSF Bridg	40000-CFS	40000	2054.6	1.16	40000	2054.6	1.16	0.0	0
Main Reach	ExistBNSF Bridg	50000-CFS	50000	2057.1	1.22	50000	2057.1	1.22	0.0	0
Main Reach	ExistBNSF Bridg	60000-CFS	60000	2059.9	1.23	60000	2059.9	1.23	0.0	0
Main Reach	ExistBNSF Bridg	70000-CFS	70000	2062.4	1.26	70000	2062.4	1.26	0.0	0
Main Reach	ExistBNSF Bridg	80000-CFS	80000	2064.7	1.29	80000	2064.7	1.29	0.0	0
Main Reach	ExistBNSF Bridg	90000-CFS	90000	2066.8	1.33	90000	2066.8	1.33	0.0	0
Main Reach	ExistBNSF Bridg	100000-CFS	100000	2068.7	1.37	100000	2068.7	1.37	0.0	0
Main Reach	ExistBNSF Bridg	110000-CFS	110000	2070.5	1.41	110000	2070.5	1.41	0.0	0
Main Reach	ExistBNSF Bridg	115000-CFS	115000	2071.3	1.43	115000	2071.3	1.43	0.0	0
Main Reach	ExistBNSF Bridg	120000-CFS	120000	2072.0	1.46	120000	2072.0	1.46	0.0	0
Main Reach	ExistBNSF Bridg	130000-CFS	130000	2073.5	1.5	130000	2073.5	1.5	0.0	0
Main Reach	ExistBNSF Bridg	140000-CFS	140000	2074.9	1.55	140000	2074.9	1.55	0.0	0
Main Reach	ExistBNSF Bridg	150000-CFS	150000	2076.2	1.63	150000	2076.2	1.63	0.0	0
Main Reach	ExistBNSF Bridg	159000-CFS	159000	2077.4	1.71	159000	2077.4	1.71	0.0	0
Main Reach	ExistBNSF Bridg	10000-CFS	10000	2050.6	0.34	10000	2050.6	0.34	0.0	0
Main Reach	ExistBNSF Bridg	20000-CFS	20000	2052.2	0.6	20000	2052.2	0.6	0.0	0
Main Reach	ExistBNSF Bridg	30000-CFS	30000	2053.1	0.84	30000	2053.1	0.84	0.0	0
Main Reach	ExistBNSF Bridg	40000-CFS	40000	2054.6	1	40000	2054.6	1	0.0	0
Main Reach	ExistBNSF Bridg	50000-CFS	50000	2057.1	1.07	50000	2057.1	1.07	0.0	0
Main Reach	ExistBNSF Bridg	60000-CFS	60000	2059.9	1.11	60000	2059.9	1.11	0.0	0
Main Reach	ExistBNSF Bridg	70000-CFS	70000	2062.4	1.14	70000	2062.4	1.14	0.0	0
Main Reach	ExistBNSF Bridg	80000-CFS	80000	2064.7	1.19	80000	2064.7	1.18	0.0	-0.01
Main Reach	ExistBNSF Bridg	90000-CFS	90000	2066.8	1.23	90000	2066.8	1.23	0.0	0
Main Reach	ExistBNSF Bridg	100000-CFS	100000	2068.7	1.27	100000	2068.7	1.27	0.0	0
Main Reach	ExistBNSF Bridg	110000-CFS	110000	2070.5	1.32	110000	2070.5	1.31	0.0	-0.01
Main Reach	ExistBNSF Bridg	115000-CFS	115000	2071.3	1.34	115000	2071.3	1.34	0.0	0
Main Reach	ExistBNSF Bridg	120000-CFS	120000	2072.0	1.37	120000	2072.0	1.36	0.0	-0.01
Main Reach	ExistBNSF Bridg	130000-CFS	130000	2073.5	1.42	130000	2073.5	1.41	0.0	-0.01
Main Reach	ExistBNSF Bridg	140000-CFS	140000	2074.9	1.47	140000	2074.9	1.46	0.0	-0.01
Main Reach	ExistBNSF Bridg	150000-CFS	150000	2076.2	1.54	150000	2076.2	1.53	0.0	-0.01
Main Reach	ExistBNSF Bridg	159000-CFS	159000	2077.4	1.62	159000	2077.4	1.62	0.0	0
Main Reach	53413	10000-CFS	10000	2050.6	0.29	10000	2050.6	0.29	0.0	0
Main Reach	53413	20000-CFS	20000	2052.2	0.5	20000	2052.2	0.5	0.0	0
Main Reach	53413	30000-CFS	30000	2053.1	0.71	30000	2053.1	0.71	0.0	0
Main Reach	53413	40000-CFS	40000	2054.6	0.85	40000	2054.6	0.85	0.0	0
Main Reach	53413	50000-CFS	50000	2057.1	0.91	50000	2057.1	0.91	0.0	0
Main Reach	53413	60000-CFS	60000	2059.9	0.94	60000	2059.9	0.94	0.0	0
Main Reach	53413	70000-CFS	70000	2062.4	0.98	70000	2062.4	0.98	0.0	0
Main Reach	53413	80000-CFS	80000	2064.7	1.01	80000	2064.7	1.01	0.0	0
Main Reach	53413	90000-CFS	90000	2066.8	1.05	90000	2066.8	1.05	0.0	0
Main Reach	53413	100000-CFS	100000	2068.7	1.09	100000	2068.7	1.09	0.0	0
Main Reach	53413	110000-CFS	110000	2070.5	1.13	110000	2070.5	1.13	0.0	0
Main Reach	53413	115000-CFS	115000	2071.3	1.15	115000	2071.3	1.15	0.0	0
Main Reach	53413	120000-CFS	120000	2072.0	1.18	120000	2072.0	1.18	0.0	0
Main Reach	53413	130000-CFS	130000	2073.5	1.22	130000	2073.5	1.22	0.0	0
Main Reach	53413	140000-CFS	140000	2074.9	1.26	140000	2074.9	1.26	0.0	0
Main Reach	53413	150000-CFS	150000	2076.2	1.3	150000	2076.2	1.3	0.0	0
Main Reach	53413	159000-CFS	159000	2077.4	1.33	159000	2077.4	1.33	0.0	0

Preliminary Draft for Agency Review

			Existing Conditions			Proposed Conditions			Change	
Reach	River Sta	Profile	Q Total	W.S. Elev	Vel Chnl	Q Total	W.S. Elev	Vel Chnl	W.S. Elev	Vel Chnl
			(cfs)	(ft)	(ft/s)	(cfs)	(ft)	(ft/s)	(ft)	(ft/s)
Main Reach	47648	10000-CFS	10000	2050.5	0.39	10000	2050.5	0.39	0.0	0
Main Reach	47648	20000-CFS	20000	2052.1	0.56	20000	2052.1	0.56	0.0	0
Main Reach	47648	30000-CFS	30000	2053.0	0.72	30000	2053.0	0.72	0.0	0
Main Reach	47648	40000-CFS	40000	2054.5	0.77	40000	2054.5	0.77	0.0	0
Main Reach	47648	50000-CFS	50000	2057.0	0.73	50000	2057.0	0.73	0.0	0
Main Reach	47648	60000-CFS	60000	2059.8	0.69	60000	2059.8	0.69	0.0	0
Main Reach	47648	70000-CFS	70000	2062.4	0.67	70000	2062.4	0.67	0.0	0
Main Reach	47648	80000-CFS	80000	2064.6	0.66	80000	2064.6	0.66	0.0	0
Main Reach	47648	90000-CFS	90000	2066.8	0.67	90000	2066.8	0.67	0.0	0
Main Reach	47648	100000-CFS	100000	2068.7	0.68	100000	2068.7	0.68	0.0	0
Main Reach	47648	110000-CFS	110000	2070.4	0.69	110000	2070.4	0.69	0.0	0
Main Reach	47648	115000-CFS	115000	2071.2	0.7	115000	2071.2	0.7	0.0	0
Main Reach	47648	120000-CFS	120000	2072.0	0.7	120000	2072.0	0.7	0.0	0
Main Reach	47648	130000-CFS	130000	2073.5	0.72	130000	2073.5	0.72	0.0	0
Main Reach	47648	140000-CFS	140000	2074.9	0.74	140000	2074.9	0.74	0.0	0
Main Reach	47648	150000-CFS	150000	2076.2	0.75	150000	2076.2	0.75	0.0	0
Main Reach	47648	159000-CFS	159000	2077.4	0.77	159000	2077.4	0.77	0.0	0
Main Reach	46775	10000-CFS	10000	2050.5	0.69	10000	2050.5	0.69	0.0	0
Main Reach	46775	20000-CFS	20000	2052.1	0.86	20000	2052.1	0.86	0.0	0
Main Reach	46775	30000-CFS	30000	2052.9	1.06	30000	2052.9	1.06	0.0	0
Main Reach	46775	40000-CFS	40000	2054.4	1.08	40000	2054.4	1.08	0.0	0
Main Reach	46775	50000-CFS	50000	2056.9	0.96	50000	2056.9	0.96	0.0	0
Main Reach	46775	60000-CFS	60000	2059.8	0.87	60000	2059.8	0.87	0.0	0
Main Reach	46775	70000-CFS	70000	2062.3	0.83	70000	2062.3	0.83	0.0	0
Main Reach	46775	80000-CFS	80000	2064.6	0.81	80000	2064.6	0.81	0.0	0
Main Reach	46775	90000-CFS	90000	2066.7	0.81	90000	2066.7	0.81	0.0	0
Main Reach	46775	100000-CFS	100000	2068.7	0.82	100000	2068.7	0.82	0.0	0
Main Reach	46775	110000-CFS	110000	2070.4	0.83	110000	2070.4	0.83	0.0	0
Main Reach	46775	115000-CFS	115000	2071.2	0.83	115000	2071.2	0.83	0.0	0
Main Reach	46775	120000-CFS	120000	2072.0	0.84	120000	2072.0	0.84	0.0	0
Main Reach	46775	130000-CFS	130000	2073.5	0.86	130000	2073.5	0.86	0.0	0
Main Reach	46775	140000-CFS	140000	2074.9	0.87	140000	2074.9	0.87	0.0	0
Main Reach	46775	150000-CFS	150000	2076.2	0.89	150000	2076.2	0.89	0.0	0
Main Reach	46775	159000-CFS	159000	2077.4	0.91	159000	2077.4	0.91	0.0	0
Main Reach	46619 BR U	10000-CFS	10000	2050.5	0.92	10000	2050.5	0.92	0.0	0
Main Reach	46619 BR U	20000-CFS	20000	2052.0	1.13	20000	2052.0	1.13	0.0	0
Main Reach	46619 BR U	30000-CFS	30000	2052.8	1.39	30000	2052.8	1.39	0.0	0
Main Reach	46619 BR U	40000-CFS	40000	2054.4	1.4	40000	2054.4	1.4	0.0	0
Main Reach	46619 BR U	50000-CFS	50000	2056.9	1.24	50000	2056.9	1.24	0.0	0
Main Reach	46619 BR U	60000-CFS	60000	2059.7	1.11	60000	2059.7	1.11	0.0	0
Main Reach	46619 BR U	70000-CFS	70000	2062.3	1.05	70000	2062.3	1.05	0.0	0
Main Reach	46619 BR U	80000-CFS	80000	2064.6	1.03	80000	2064.6	1.03	0.0	0
Main Reach	46619 BR U	90000-CFS	90000	2066.7	1.02	90000	2066.7	1.02	0.0	0
Main Reach	46619 BR U	100000-CFS	100000	2068.7	1.02	100000	2068.7	1.02	0.0	0
Main Reach	46619 BR U	110000-CFS	110000	2070.4	1.03	110000	2070.4	1.03	0.0	0
Main Reach	46619 BR U	115000-CFS	115000	2071.2	1.03	115000	2071.2	1.03	0.0	0
Main Reach	46619 BR U	120000-CFS	120000	2072.0	1.04	120000	2072.0	1.04	0.0	0
Main Reach	46619 BR U	130000-CFS	130000	2073.5	1.06	130000	2073.5	1.06	0.0	0
Main Reach	46619 BR U	140000-CFS	140000	2074.8	1.08	140000	2074.8	1.08	0.0	0
Main Reach	46619 BR U	150000-CFS	150000	2076.2	1.09	150000	2076.2	1.09	0.0	0
Main Reach	46619 BR U	159000-CFS	159000	2077.3	1.11	159000	2077.3	1.11	0.0	0
Main Reach	46619 BR D	10000-CFS	10000	2050.5	0.92	10000	2050.5	0.92	0.0	0
Main Reach	46619 BR D	20000-CFS	20000	2052.0	1.15	20000	2052.0	1.15	0.0	0
Main Reach	46619 BR D	30000-CFS	30000	2052.8	1.42	30000	2052.8	1.42	0.0	0
Main Reach	46619 BR D	40000-CFS	40000	2054.4	1.43	40000	2054.4	1.43	0.0	0
Main Reach	46619 BR D	50000-CFS	50000	2056.9	1.27	50000	2056.9	1.27	0.0	0
Main Reach	46619 BR D	60000-CFS	60000	2059.7	1.14	60000	2059.7	1.14	0.0	0
Main Reach	46619 BR D	70000-CFS	70000	2062.3	1.08	70000	2062.3	1.08	0.0	0
Main Reach	46619 BR D	80000-CFS	80000	2064.6	1.05	80000	2064.6	1.05	0.0	0
Main Reach	46619 BR D	90000-CFS	90000	2066.7	1.05	90000	2066.7	1.05	0.0	0
Main Reach	46619 BR D	100000-CFS	100000	2068.7	1.05	100000	2068.7	1.05	0.0	0
Main Reach	46619 BR D	110000-CFS	110000	2070.4	1.06	110000	2070.4	1.06	0.0	0
Main Reach	46619 BR D	115000-CFS	115000	2071.2	1.06	115000	2071.2	1.06	0.0	0

Preliminary Draft for Agency Review

			Existing Conditions			Proposed Conditions			Change	
Reach	River Sta	Profile	Q Total	W.S. Elev	Vel Chnl	Q Total	W.S. Elev	Vel Chnl	W.S. Elev	Vel Chnl
			(cfs)	(ft)	(ft/s)	(cfs)	(ft)	(ft/s)	(ft)	(ft/s)
Main Reach	46619 BR D	120000-CFS	120000	2072.0	1.07	120000	2072.0	1.07	0.0	0
Main Reach	46619 BR D	130000-CFS	130000	2073.4	1.09	130000	2073.4	1.09	0.0	0
Main Reach	46619 BR D	140000-CFS	140000	2074.8	1.11	140000	2074.8	1.11	0.0	0
Main Reach	46619 BR D	150000-CFS	150000	2076.2	1.12	150000	2076.2	1.12	0.0	0
Main Reach	46619 BR D	159000-CFS	159000	2077.3	1.14	159000	2077.3	1.14	0.0	0
Main Reach	46481	10000-CFS	10000	2050.5	0.71	10000	2050.5	0.71	0.0	0
Main Reach	46481	20000-CFS	20000	2052.0	0.88	20000	2052.0	0.88	0.0	0
Main Reach	46481	30000-CFS	30000	2052.8	1.09	30000	2052.8	1.09	0.0	0
Main Reach	46481	40000-CFS	40000	2054.4	1.1	40000	2054.4	1.1	0.0	0
Main Reach	46481	50000-CFS	50000	2056.9	0.98	50000	2056.9	0.98	0.0	0
Main Reach	46481	60000-CFS	60000	2059.7	0.89	60000	2059.7	0.89	0.0	0
Main Reach	46481	70000-CFS	70000	2062.3	0.85	70000	2062.3	0.85	0.0	0
Main Reach	46481	80000-CFS	80000	2064.6	0.83	80000	2064.6	0.83	0.0	0
Main Reach	46481	90000-CFS	90000	2066.7	0.83	90000	2066.7	0.83	0.0	0
Main Reach	46481	100000-CFS	100000	2068.7	0.84	100000	2068.7	0.84	0.0	0
Main Reach	46481	110000-CFS	110000	2070.4	0.85	110000	2070.4	0.85	0.0	0
Main Reach	46481	115000-CFS	115000	2071.2	0.85	115000	2071.2	0.85	0.0	0
Main Reach	46481	120000-CFS	120000	2072.0	0.86	120000	2072.0	0.86	0.0	0
Main Reach	46481	130000-CFS	130000	2073.4	0.88	130000	2073.4	0.88	0.0	0
Main Reach	46481	140000-CFS	140000	2074.8	0.9	140000	2074.8	0.9	0.0	0
Main Reach	46481	150000-CFS	150000	2076.2	0.92	150000	2076.2	0.92	0.0	0
Main Reach	46481	159000-CFS	159000	2077.3	0.93	159000	2077.3	0.93	0.0	0
Main Reach	46086	10000-CFS	10000	2050.4	0.71	10000	2050.4	0.71	0.0	0
Main Reach	46086	20000-CFS	20000	2052.0	0.81	20000	2052.0	0.81	0.0	0
Main Reach	46086	30000-CFS	30000	2052.8	0.95	30000	2052.8	0.95	0.0	0
Main Reach	46086	40000-CFS	40000	2054.3	0.88	40000	2054.3	0.88	0.0	0
Main Reach	46086	50000-CFS	50000	2056.9	0.72	50000	2056.9	0.72	0.0	0
Main Reach	46086	60000-CFS	60000	2059.7	0.62	60000	2059.7	0.62	0.0	0
Main Reach	46086	70000-CFS	70000	2062.3	0.58	70000	2062.3	0.58	0.0	0
Main Reach	46086	80000-CFS	80000	2064.6	0.56	80000	2064.6	0.56	0.0	0
Main Reach	46086	90000-CFS	90000	2066.7	0.55	90000	2066.7	0.55	0.0	0
Main Reach	46086	100000-CFS	100000	2068.7	0.55	100000	2068.7	0.55	0.0	0
Main Reach	46086	110000-CFS	110000	2070.4	0.55	110000	2070.4	0.55	0.0	0
Main Reach	46086	115000-CFS	115000	2071.2	0.55	115000	2071.2	0.55	0.0	0
Main Reach	46086	120000-CFS	120000	2072.0	0.56	120000	2072.0	0.56	0.0	0
Main Reach	46086	130000-CFS	130000	2073.5	0.57	130000	2073.5	0.57	0.0	0
Main Reach	46086	140000-CFS	140000	2074.8	0.58	140000	2074.8	0.58	0.0	0
Main Reach	46086	150000-CFS	150000	2076.2	0.59	150000	2076.2	0.59	0.0	0
Main Reach	46086	159000-CFS	159000	2077.3	0.6	159000	2077.3	0.6	0.0	0
Main Reach	39639	10000-CFS	10000	2047.6	5.83	10000	2047.6	5.83	0.0	0
Main Reach	39639	20000-CFS	20000	2048.3	6.69	20000	2048.3	6.69	0.0	0
Main Reach	39639	30000-CFS	30000	2050.4	3.28	30000	2050.4	3.28	0.0	0
Main Reach	39639	40000-CFS	40000	2053.5	1.31	40000	2053.5	1.31	0.0	0
Main Reach	39639	50000-CFS	50000	2056.7	0.81	50000	2056.7	0.81	0.0	0
Main Reach	39639	60000-CFS	60000	2059.6	0.64	60000	2059.6	0.64	0.0	0
Main Reach	39639	70000-CFS	70000	2062.3	0.58	70000	2062.3	0.58	0.0	0
Main Reach	39639	80000-CFS	80000	2064.6	0.55	80000	2064.6	0.55	0.0	0
Main Reach	39639	90000-CFS	90000	2066.7	0.53	90000	2066.7	0.53	0.0	0
Main Reach	39639	100000-CFS	100000	2068.6	0.53	100000	2068.6	0.53	0.0	0
Main Reach	39639	110000-CFS	110000	2070.4	0.53	110000	2070.4	0.53	0.0	0
Main Reach	39639	115000-CFS	115000	2071.2	0.53	115000	2071.2	0.53	0.0	0
Main Reach	39639	120000-CFS	120000	2072.0	0.53	120000	2072.0	0.53	0.0	0
Main Reach	39639	130000-CFS	130000	2073.4	0.54	130000	2073.4	0.54	0.0	0
Main Reach	39639	140000-CFS	140000	2074.8	0.55	140000	2074.8	0.55	0.0	0
Main Reach	39639	150000-CFS	150000	2076.2	0.56	150000	2076.2	0.56	0.0	0
Main Reach	39639	159000-CFS	159000	2077.3	0.56	159000	2077.3	0.56	0.0	0
Main Reach	34906	10000-CFS	10000	2040.0	1.57	10000	2040.0	1.57	0.0	0
Main Reach	34906	20000-CFS	20000	2044.2	1.97	20000	2044.2	1.97	0.0	0
Main Reach	34906	30000-CFS	30000	2049.1	1.3	30000	2049.1	1.3	0.0	0
Main Reach	34906	40000-CFS	40000	2053.1	1.07	40000	2053.1	1.07	0.0	0
Main Reach	34906	50000-CFS	50000	2056.5	0.99	50000	2056.5	0.99	0.0	0
Main Reach	34906	60000-CFS	60000	2059.5	0.96	60000	2059.5	0.96	0.0	0

Preliminary Draft for Agency Review

			Existing Conditions			Proposed Conditions			Change	
Reach	River Sta	Profile	Q Total	W.S. Elev	Vel Chnl	Q Total	W.S. Elev	Vel Chnl	W.S. Elev	Vel Chnl
			(cfs)	(ft)	(ft/s)	(cfs)	(ft)	(ft/s)	(ft)	(ft/s)
Main Reach	34906	70000-CFS	70000	2062.2	0.96	70000	2062.2	0.96	0.0	0
Main Reach	34906	80000-CFS	80000	2064.5	0.97	80000	2064.5	0.97	0.0	0
Main Reach	34906	90000-CFS	90000	2066.6	0.99	90000	2066.6	0.99	0.0	0
Main Reach	34906	100000-CFS	100000	2068.6	1.01	100000	2068.6	1.01	0.0	0
Main Reach	34906	110000-CFS	110000	2070.3	1.03	110000	2070.3	1.03	0.0	0
Main Reach	34906	115000-CFS	115000	2071.1	1.04	115000	2071.1	1.04	0.0	0
Main Reach	34906	120000-CFS	120000	2071.9	1.06	120000	2071.9	1.06	0.0	0
Main Reach	34906	130000-CFS	130000	2073.4	1.08	130000	2073.4	1.08	0.0	0
Main Reach	34906	140000-CFS	140000	2074.8	1.11	140000	2074.8	1.11	0.0	0
Main Reach	34906	150000-CFS	150000	2076.1	1.14	150000	2076.1	1.14	0.0	0
Main Reach	34906	159000-CFS	159000	2077.3	1.16	159000	2077.3	1.16	0.0	0
Main Reach	32258	10000-CFS	10000	2040.0	0.28	10000	2040.0	0.28	0.0	0
Main Reach	32258	20000-CFS	20000	2044.2	0.47	20000	2044.2	0.47	0.0	0
Main Reach	32258	30000-CFS	30000	2049.1	0.53	30000	2049.1	0.53	0.0	0
Main Reach	32258	40000-CFS	40000	2053.1	0.56	40000	2053.1	0.56	0.0	0
Main Reach	32258	50000-CFS	50000	2056.5	0.59	50000	2056.5	0.59	0.0	0
Main Reach	32258	60000-CFS	60000	2059.5	0.62	60000	2059.5	0.62	0.0	0
Main Reach	32258	70000-CFS	70000	2062.2	0.65	70000	2062.2	0.65	0.0	0
Main Reach	32258	80000-CFS	80000	2064.5	0.68	80000	2064.5	0.68	0.0	0
Main Reach	32258	90000-CFS	90000	2066.6	0.71	90000	2066.6	0.71	0.0	0
Main Reach	32258	100000-CFS	100000	2068.6	0.74	100000	2068.6	0.74	0.0	0
Main Reach	32258	110000-CFS	110000	2070.3	0.77	110000	2070.3	0.77	0.0	0
Main Reach	32258	115000-CFS	115000	2071.1	0.78	115000	2071.1	0.78	0.0	0
Main Reach	32258	120000-CFS	120000	2071.9	0.8	120000	2071.9	0.8	0.0	0
Main Reach	32258	130000-CFS	130000	2073.4	0.83	130000	2073.4	0.83	0.0	0
Main Reach	32258	140000-CFS	140000	2074.8	0.86	140000	2074.8	0.86	0.0	0
Main Reach	32258	150000-CFS	150000	2076.1	0.89	150000	2076.1	0.89	0.0	0
Main Reach	32258	159000-CFS	159000	2077.3	0.91	159000	2077.3	0.91	0.0	0
Main Reach	30094	10000-CFS	10000	2040.0	0.45	10000	2040.0	0.45	0.0	0
Main Reach	30094	20000-CFS	20000	2044.2	0.68	20000	2044.2	0.68	0.0	0
Main Reach	30094	30000-CFS	30000	2049.1	0.76	30000	2049.1	0.76	0.0	0
Main Reach	30094	40000-CFS	40000	2053.1	0.81	40000	2053.1	0.81	0.0	0
Main Reach	30094	50000-CFS	50000	2056.5	0.86	50000	2056.5	0.86	0.0	0
Main Reach	30094	60000-CFS	60000	2059.5	0.9	60000	2059.5	0.9	0.0	0
Main Reach	30094	70000-CFS	70000	2062.2	0.94	70000	2062.2	0.94	0.0	0
Main Reach	30094	80000-CFS	80000	2064.5	0.99	80000	2064.5	0.99	0.0	0
Main Reach	30094	90000-CFS	90000	2066.6	1.04	90000	2066.6	1.04	0.0	0
Main Reach	30094	100000-CFS	100000	2068.6	1.09	100000	2068.6	1.09	0.0	0
Main Reach	30094	110000-CFS	110000	2070.3	1.13	110000	2070.3	1.13	0.0	0
Main Reach	30094	115000-CFS	115000	2071.1	1.16	115000	2071.1	1.16	0.0	0
Main Reach	30094	120000-CFS	120000	2071.9	1.18	120000	2071.9	1.18	0.0	0
Main Reach	30094	130000-CFS	130000	2073.3	1.23	130000	2073.3	1.23	0.0	0
Main Reach	30094	140000-CFS	140000	2074.7	1.28	140000	2074.7	1.28	0.0	0
Main Reach	30094	150000-CFS	150000	2076.1	1.32	150000	2076.1	1.32	0.0	0
Main Reach	30094	159000-CFS	159000	2077.2	1.36	159000	2077.2	1.36	0.0	0
Main Reach	27007	10000-CFS	10000	2040.0	0.43	10000	2040.0	0.43	0.0	0
Main Reach	27007	20000-CFS	20000	2044.1	0.71	20000	2044.1	0.71	0.0	0
Main Reach	27007	30000-CFS	30000	2049.1	0.89	30000	2049.1	0.89	0.0	0
Main Reach	27007	40000-CFS	40000	2053.0	1.03	40000	2053.0	1.03	0.0	0
Main Reach	27007	50000-CFS	50000	2056.4	1.13	50000	2056.4	1.13	0.0	0
Main Reach	27007	60000-CFS	60000	2059.5	1.2	60000	2059.5	1.2	0.0	0
Main Reach	27007	70000-CFS	70000	2062.1	1.27	70000	2062.1	1.27	0.0	0
Main Reach	27007	80000-CFS	80000	2064.4	1.34	80000	2064.4	1.34	0.0	0
Main Reach	27007	90000-CFS	90000	2066.6	1.41	90000	2066.6	1.41	0.0	0
Main Reach	27007	100000-CFS	100000	2068.5	1.48	100000	2068.5	1.48	0.0	0
Main Reach	27007	110000-CFS	110000	2070.2	1.54	110000	2070.2	1.54	0.0	0
Main Reach	27007	115000-CFS	115000	2071.1	1.58	115000	2071.1	1.58	0.0	0
Main Reach	27007	120000-CFS	120000	2071.8	1.61	120000	2071.8	1.61	0.0	0
Main Reach	27007	130000-CFS	130000	2073.3	1.67	130000	2073.3	1.67	0.0	0
Main Reach	27007	140000-CFS	140000	2074.7	1.74	140000	2074.7	1.74	0.0	0
Main Reach	27007	150000-CFS	150000	2076.0	1.8	150000	2076.0	1.8	0.0	0
Main Reach	27007	159000-CFS	159000	2077.2	1.85	159000	2077.2	1.85	0.0	0

Preliminary Draft for Agency Review

			Existing Conditions			Proposed Conditions			Change	
Reach	River Sta	Profile	Q Total	W.S. Elev	Vel Chnl	Q Total	W.S. Elev	Vel Chnl	W.S. Elev	Vel Chnl
			(cfs)	(ft)	(ft/s)	(cfs)	(ft)	(ft/s)	(ft)	(ft/s)
Main Reach	24647	10000-CFS	10000	2040.0	0.41	10000	2040.0	0.41	0.0	0
Main Reach	24647	20000-CFS	20000	2044.1	0.69	20000	2044.1	0.69	0.0	0
Main Reach	24647	30000-CFS	30000	2049.0	0.86	30000	2049.0	0.86	0.0	0
Main Reach	24647	40000-CFS	40000	2053.0	1	40000	2053.0	1	0.0	0
Main Reach	24647	50000-CFS	50000	2056.4	1.12	50000	2056.4	1.12	0.0	0
Main Reach	24647	60000-CFS	60000	2059.4	1.21	60000	2059.4	1.21	0.0	0
Main Reach	24647	70000-CFS	70000	2062.1	1.3	70000	2062.1	1.3	0.0	0
Main Reach	24647	80000-CFS	80000	2064.4	1.39	80000	2064.4	1.39	0.0	0
Main Reach	24647	90000-CFS	90000	2066.5	1.48	90000	2066.5	1.48	0.0	0
Main Reach	24647	100000-CFS	100000	2068.5	1.56	100000	2068.5	1.56	0.0	0
Main Reach	24647	110000-CFS	110000	2070.2	1.64	110000	2070.2	1.64	0.0	0
Main Reach	24647	115000-CFS	115000	2071.0	1.68	115000	2071.0	1.68	0.0	0
Main Reach	24647	120000-CFS	120000	2071.8	1.72	120000	2071.8	1.72	0.0	0
Main Reach	24647	130000-CFS	130000	2073.2	1.79	130000	2073.2	1.79	0.0	0
Main Reach	24647	140000-CFS	140000	2074.6	1.86	140000	2074.6	1.86	0.0	0
Main Reach	24647	150000-CFS	150000	2076.0	1.93	150000	2076.0	1.93	0.0	0
Main Reach	24647	159000-CFS	159000	2077.1	1.99	159000	2077.1	1.99	0.0	0
Main Reach	21637	10000-CFS	10000	2040.0	0.38	10000	2040.0	0.38	0.0	0
Main Reach	21637	20000-CFS	20000	2044.1	0.66	20000	2044.1	0.66	0.0	0
Main Reach	21637	30000-CFS	30000	2049.0	0.85	30000	2049.0	0.85	0.0	0
Main Reach	21637	40000-CFS	40000	2053.0	1.01	40000	2053.0	1.01	0.0	0
Main Reach	21637	50000-CFS	50000	2056.3	1.15	50000	2056.3	1.15	0.0	0
Main Reach	21637	60000-CFS	60000	2059.4	1.24	60000	2059.4	1.24	0.0	0
Main Reach	21637	70000-CFS	70000	2062.0	1.31	70000	2062.0	1.31	0.0	0
Main Reach	21637	80000-CFS	80000	2064.4	1.37	80000	2064.4	1.37	0.0	0
Main Reach	21637	90000-CFS	90000	2066.5	1.43	90000	2066.5	1.43	0.0	0
Main Reach	21637	100000-CFS	100000	2068.4	1.48	100000	2068.4	1.48	0.0	0
Main Reach	21637	110000-CFS	110000	2070.2	1.53	110000	2070.2	1.53	0.0	0
Main Reach	21637	115000-CFS	115000	2071.0	1.56	115000	2071.0	1.56	0.0	0
Main Reach	21637	120000-CFS	120000	2071.7	1.58	120000	2071.7	1.58	0.0	0
Main Reach	21637	130000-CFS	130000	2073.2	1.64	130000	2073.2	1.64	0.0	0
Main Reach	21637	140000-CFS	140000	2074.6	1.69	140000	2074.6	1.69	0.0	0
Main Reach	21637	150000-CFS	150000	2075.9	1.74	150000	2075.9	1.74	0.0	0
Main Reach	21637	159000-CFS	159000	2077.1	1.78	159000	2077.1	1.78	0.0	0
Main Reach	19804	10000-CFS	10000	2039.9	0.46	10000	2039.9	0.46	0.0	0
Main Reach	19804	20000-CFS	20000	2044.1	0.73	20000	2044.1	0.73	0.0	0
Main Reach	19804	30000-CFS	30000	2049.0	0.88	30000	2049.0	0.88	0.0	0
Main Reach	19804	40000-CFS	40000	2052.9	0.99	40000	2052.9	0.99	0.0	0
Main Reach	19804	50000-CFS	50000	2056.3	1.06	50000	2056.3	1.06	0.0	0
Main Reach	19804	60000-CFS	60000	2059.4	1.12	60000	2059.4	1.12	0.0	0
Main Reach	19804	70000-CFS	70000	2062.0	1.18	70000	2062.0	1.18	0.0	0
Main Reach	19804	80000-CFS	80000	2064.3	1.25	80000	2064.3	1.25	0.0	0
Main Reach	19804	90000-CFS	90000	2066.4	1.31	90000	2066.4	1.31	0.0	0
Main Reach	19804	100000-CFS	100000	2068.4	1.37	100000	2068.4	1.37	0.0	0
Main Reach	19804	110000-CFS	110000	2070.1	1.44	110000	2070.1	1.44	0.0	0
Main Reach	19804	115000-CFS	115000	2070.9	1.47	115000	2070.9	1.47	0.0	0
Main Reach	19804	120000-CFS	120000	2071.7	1.5	120000	2071.7	1.5	0.0	0
Main Reach	19804	130000-CFS	130000	2073.2	1.56	130000	2073.2	1.56	0.0	0
Main Reach	19804	140000-CFS	140000	2074.6	1.62	140000	2074.6	1.62	0.0	0
Main Reach	19804	150000-CFS	150000	2075.9	1.68	150000	2075.9	1.68	0.0	0
Main Reach	19804	159000-CFS	159000	2077.0	1.73	159000	2077.0	1.73	0.0	0
Main Reach	14428	10000-CFS	10000	2039.6	4.09	10000	2039.6	4.09	0.0	0
Main Reach	14428	20000-CFS	20000	2043.6	4.77	20000	2043.6	4.77	0.0	0
Main Reach	14428	30000-CFS	30000	2048.6	4.1	30000	2048.6	4.1	0.0	0
Main Reach	14428	40000-CFS	40000	2052.5	3.79	40000	2052.5	3.79	0.0	0
Main Reach	14428	50000-CFS	50000	2055.9	3.63	50000	2055.9	3.63	0.0	0
Main Reach	14428	60000-CFS	60000	2059.0	3.56	60000	2059.0	3.56	0.0	0
Main Reach	14428	70000-CFS	70000	2061.6	3.59	70000	2061.6	3.59	0.0	0
Main Reach	14428	80000-CFS	80000	2063.9	3.66	80000	2063.9	3.66	0.0	0
Main Reach	14428	90000-CFS	90000	2066.1	3.74	90000	2066.1	3.74	0.0	0
Main Reach	14428	100000-CFS	100000	2068.0	3.84	100000	2068.0	3.84	0.0	0
Main Reach	14428	110000-CFS	110000	2069.7	3.96	110000	2069.7	3.96	0.0	0
Main Reach	14428	115000-CFS	115000	2070.5	4.02	115000	2070.5	4.02	0.0	0

Preliminary Draft for Agency Review

			Existing Conditions			Proposed Conditions			Change	
Reach	River Sta	Profile	Q Total	W.S. Elev	Vel Chnl	Q Total	W.S. Elev	Vel Chnl	W.S. Elev	Vel Chnl
			(cfs)	(ft)	(ft/s)	(cfs)	(ft)	(ft/s)	(ft)	(ft/s)
Main Reach	14428	120000-CFS	120000	2071.3	4.08	120000	2071.3	4.08	0.0	0
Main Reach	14428	130000-CFS	130000	2072.7	4.21	130000	2072.7	4.21	0.0	0
Main Reach	14428	140000-CFS	140000	2074.1	4.34	140000	2074.1	4.34	0.0	0
Main Reach	14428	150000-CFS	150000	2075.4	4.45	150000	2075.4	4.45	0.0	0
Main Reach	14428	159000-CFS	159000	2076.5	4.55	159000	2076.5	4.55	0.0	0
Main Reach	13088	10000-CFS	10000	2033.9	10.99	10000	2033.9	10.99	0.0	0
Main Reach	13088	20000-CFS	20000	2041.5	6.1	20000	2041.5	6.1	0.0	0
Main Reach	13088	30000-CFS	30000	2047.4	5.07	30000	2047.4	5.07	0.0	0
Main Reach	13088	40000-CFS	40000	2051.7	4.28	40000	2051.7	4.28	0.0	0
Main Reach	13088	50000-CFS	50000	2055.4	3.7	50000	2055.4	3.7	0.0	0
Main Reach	13088	60000-CFS	60000	2058.6	3.4	60000	2058.6	3.4	0.0	0
Main Reach	13088	70000-CFS	70000	2061.4	3.3	70000	2061.4	3.3	0.0	0
Main Reach	13088	80000-CFS	80000	2063.7	3.29	80000	2063.7	3.29	0.0	0
Main Reach	13088	90000-CFS	90000	2065.9	3.31	90000	2065.9	3.31	0.0	0
Main Reach	13088	100000-CFS	100000	2067.8	3.36	100000	2067.8	3.36	0.0	0
Main Reach	13088	110000-CFS	110000	2069.6	3.43	110000	2069.6	3.43	0.0	0
Main Reach	13088	115000-CFS	115000	2070.4	3.47	115000	2070.4	3.47	0.0	0
Main Reach	13088	120000-CFS	120000	2071.1	3.51	120000	2071.1	3.51	0.0	0
Main Reach	13088	130000-CFS	130000	2072.6	3.6	130000	2072.6	3.6	0.0	0
Main Reach	13088	140000-CFS	140000	2074.0	3.68	140000	2074.0	3.68	0.0	0
Main Reach	13088	150000-CFS	150000	2075.3	3.77	150000	2075.3	3.77	0.0	0
Main Reach	13088	159000-CFS	159000	2076.4	3.84	159000	2076.4	3.84	0.0	0
Main Reach	11603	10000-CFS	10000	2033.0	0.39	10000	2033.0	0.39	0.0	0
Main Reach	11603	20000-CFS	20000	2041.9	0.6	20000	2041.9	0.6	0.0	0
Main Reach	11603	30000-CFS	30000	2047.6	0.77	30000	2047.6	0.77	0.0	0
Main Reach	11603	40000-CFS	40000	2051.9	0.92	40000	2051.9	0.92	0.0	0
Main Reach	11603	50000-CFS	50000	2055.5	1.04	50000	2055.5	1.04	0.0	0
Main Reach	11603	60000-CFS	60000	2058.7	1.12	60000	2058.7	1.12	0.0	0
Main Reach	11603	70000-CFS	70000	2061.4	1.2	70000	2061.4	1.2	0.0	0
Main Reach	11603	80000-CFS	80000	2063.8	1.28	80000	2063.8	1.28	0.0	0
Main Reach	11603	90000-CFS	90000	2065.9	1.36	90000	2065.9	1.36	0.0	0
Main Reach	11603	100000-CFS	100000	2067.9	1.43	100000	2067.9	1.43	0.0	0
Main Reach	11603	110000-CFS	110000	2069.6	1.51	110000	2069.6	1.51	0.0	0
Main Reach	11603	115000-CFS	115000	2070.4	1.55	115000	2070.4	1.55	0.0	0
Main Reach	11603	120000-CFS	120000	2071.2	1.58	120000	2071.2	1.58	0.0	0
Main Reach	11603	130000-CFS	130000	2072.6	1.66	130000	2072.6	1.66	0.0	0
Main Reach	11603	140000-CFS	140000	2074.0	1.72	140000	2074.0	1.72	0.0	0
Main Reach	11603	150000-CFS	150000	2075.3	1.79	150000	2075.3	1.79	0.0	0
Main Reach	11603	159000-CFS	159000	2076.5	1.85	159000	2076.5	1.85	0.0	0
Main Reach	10000	10000-CFS	10000	2033.0	1.45	10000	2033.0	1.45	0.0	0
Main Reach	10000	20000-CFS	20000	2041.8	1.64	20000	2041.8	1.64	0.0	0
Main Reach	10000	30000-CFS	30000	2047.6	1.78	30000	2047.6	1.78	0.0	0
Main Reach	10000	40000-CFS	40000	2051.8	1.93	40000	2051.8	1.93	0.0	0
Main Reach	10000	50000-CFS	50000	2055.4	2.05	50000	2055.4	2.05	0.0	0
Main Reach	10000	60000-CFS	60000	2058.6	2.16	60000	2058.6	2.16	0.0	0
Main Reach	10000	70000-CFS	70000	2061.3	2.26	70000	2061.3	2.26	0.0	0
Main Reach	10000	80000-CFS	80000	2063.7	2.35	80000	2063.7	2.35	0.0	0
Main Reach	10000	90000-CFS	90000	2065.8	2.44	90000	2065.8	2.44	0.0	0
Main Reach	10000	100000-CFS	100000	2067.8	2.52	100000	2067.8	2.52	0.0	0
Main Reach	10000	110000-CFS	110000	2069.5	2.61	110000	2069.5	2.61	0.0	0
Main Reach	10000	115000-CFS	115000	2070.3	2.65	115000	2070.3	2.65	0.0	0
Main Reach	10000	120000-CFS	120000	2071.1	2.69	120000	2071.1	2.69	0.0	0
Main Reach	10000	130000-CFS	130000	2072.5	2.77	130000	2072.5	2.77	0.0	0
Main Reach	10000	140000-CFS	140000	2073.9	2.83	140000	2073.9	2.83	0.0	0
Main Reach	10000	150000-CFS	150000	2075.2	2.9	150000	2075.2	2.9	0.0	0
Main Reach	10000	159000-CFS	159000	2076.4	2.95	159000	2076.4	2.95	0.0	0

Preliminary Draft for Agency Review

Appendix F

Biological Assessment

Preliminary Draft for Agency Review

BIOLOGICAL ASSESSMENT

BNSF Sandpoint Junction Connector Project

Preliminary Draft for Agency Review

Prepared by:

JACOBS

101 North Fourth Avenue, Suite 203
Sandpoint, Idaho 83864

Sue PaDelford, Senior Biologist
Craig Broadhead, Senior Biologist
Diane Williams, Environmental Planner

Revised August 22, 2018

Table of Contents

Abbreviation and Acronyms iv

Executive Summary vi

Introduction 1
- Consultation History 3
- Project Location 3

Project Description 5
- General Project Description....5
  - Existing Conditions and Structures 5
  - Proposed Action 6
  - Construction Elements 9

Detailed Project Description – Construction Key Elements 12

Impact Avoidance and Minimization Measures 23
- Avoidance Measures....23
- Minimization Measures....24

Mitigation Measures 27

Action Area.... 28
- Terrestrial Impact Zone 28
- Aquatic Impact Zone 31

Environmental Baseline.... 33
- Terrestrial Setting....33
- Lake Pend Oreille....33
- Sand Creek 34

Federally Proposed and Listed Species and Designated Critical Habitat.... 35
- Species Excluded from Further Assessment 35
  - Canada Lynx 36
  - Grizzly Bear....36
  - North American Wolverine....36
  - Selkirk Mountains Woodland Caribou 37
- Columbia River DPS Bull Trout 38
  - Status and Presence in the Action Area 38
- Bull Trout Designated Critical Habitat....41
  - Status and Presence in the Action Area 41

Analysis of Effects to Bull Trout.... 46
- Direct Effects....46
  - Elevated Sound Pressure Levels....46
  - Sedimentation/Turbidity 49
  - Contaminant Mobilization 51
  - Nearshore Fill Placement 52
  - Riparian Vegetation Removal 52
- Indirect Effects 53
  - Long-Term Habitat Loss or Alteration 53
  - Predator/Prey Relationships 53
  - Bridge Shading....53

Preliminary Draft for Agency Review

Effects to Bull Trout Designated Critical Habitat 54
Interrelated and Interdependent Actions and Activities 55
Cumulative Effects 56
Non-Native Fish Suppression 56
Fish Passage Projects 57

Conclusions and Effect Determinations 59
Bull Trout 59
Bull Trout – Designated Critical Habitat 60

Bibliography 61

Tables

Table 1: General Work Sequencing and Timeline 6
Table 2: Construction Equipment List, Use, and Maximum In-Air Noise Levels 8
Table 3: Project Elements (Estimated Timing and Duration) 9
Table 4: Number of Piles and Installation Detail 20
Table 5: Airborne Construction Noise Attenuation 29
Table 6: ESA-Listed and Proposed Terrestrial Species and Designated/Proposed Critical Habitat 35

Figures

Figure 1: Project Overview 2
Figure 2: Project Vicinity 4
Figure 3: Simulation of new Bridge 3.1 over Sand Creek between US 95 and existing Bridge 3.1 7
Figure 4: Simulation of new Bridge 3.9 from the north shoreline of the Pend Oreille River 7
Figure 5: Construction Staging Areas and Access Points 13
Figure 6: Action Area Map 30
Figure 7: Critical Habitat for Bull Trout 42
Figure 8: Bull Trout Threshold Distances 50

Appendices

Appendix A: Project Plans
Appendix B: Official U.S. Fish and Wildlife Species List
Appendix C: Construction Timing Table
Appendix D: Pile Driving Impact Calculators
Appendix E: 2008 Pier Replacements Underwater Sound Level Measurements Report
Appendix F: Impact Pile Driving Durations and Impact Extents
Appendix G: Sediment Assessment
Appendix H: Bull Trout Exposure Effect Matrix Table

Preliminary Draft for Agency Review

Abbreviation and Acronyms

℃	degree Celsius
BMP	best management practice
BNSF	BNSF Railway Company
CFR	Code of Federal Regulations
CFSA	Clark Fork Settlement Agreement
CHU	Critical Habitat Unit
CHRU	Columbia Headwaters Recovery Unit
dB	decibel
dBA	A-weighted decibel
ESA	Endangered Species Act
FMO	foraging, migration, and overwintering
FR	Federal Register
IDEQ	Idaho Department of Environmental Quality
IDFG	Idaho Department of Fish and Game
IDL	Idaho Department of Lands
Jacobs	Jacobs Engineering Group Inc.
LPO	Lake Pend Oreille
LPO-B	Lake Pend Oreille Basin
MP	milepost
MRL	Montana Rail Link
NMFS	National Marine Fisheries Service
NOAA	National Oceanic and Atmospheric Administration
OHWM	ordinary high water mark
PCE	primary constituent element
Project	BNSF Sandpoint Junction Connector Project
RMS	root-mean-square
ROW	right-of-way
SEL	sound exposure level
SPL	sound pressure level
SR	spawning and rearing
SWPPP	Stormwater Pollution Prevention Plan
TMDL	total maximum daily load

Preliminary Draft for Agency Review

US 95	U.S. Highway 95
USACE	U.S. Army Corps of Engineers
USCG	U.S. Coast Guard
USEPA	U.S. Environmental Protection Agency
USFWS	U.S. Fish and Wildlife Service
WQMPP	Water Quality Monitoring and Protection Plan
WSDOT	Washington State Department of Transportation

Preliminary Draft for Agency Review

Executive Summary

BNSF Railway Company (BNSF) proposes to construct the Sandpoint Junction Connector Project (Project). The Project would consist of a 2.2-mile-long second main line track adjacent to (west of) the existing BNSF main line track. The Project action would consist of a constructing a second main line track; upgrading existing access roads, staging areas, tracks, switches and signals; constructing new bridges over Bridge Street (Bridge 3.0), Sand Creek (Bridge 3.1), and Lake Pend Oreille (LPO; Bridge. 3.9) adjacent to (west of) the existing rail bridges; building temporary construction bridges adjacent to (west of) the new bridges; filling 0.88 acre of permanent nearshore area and 0.38 acre of temporary nearshore area below the jurisdictional ordinary high water mark elevation of 2,062.5 feet, associated with bridge abutments and the south switch; and filling 0.28 acre of wetland south of Bridge 3.1.

The impacts to jurisdictional wetlands, nearshore areas, and navigable waters of LPO and Sand Creek require permits from the U.S. Coast Guard and the U.S. Army Corps of Engineers. These federal actions trigger evaluation under the Endangered Species Act for Project impacts to threatened or endangered species and their designated critical habitat.

This Biological Assessment determines that Project activities are likely to adversely affect individual adult and sub-adult threatened bull trout primarily due to pile driving during construction for the new Bridge 3.1 in Sand Creek and the new Bridge 3.9 in LPO. This Biological Assessment determines that Project activities are likely to adversely affect bull trout-designated critical habitat in LPO and Sand Creek because of elevated sound pressure levels during construction.

ESA-Listed Species and Critical Habitats Effect Determination

Common Name	Scientific Name	Status (Species and Critical Habitat)	Species/Habitat in Action Area	Determination
Bull Trout	*Salvelinus confluentus*	Threatened; Critical Habitat	No	Likely to Adversely Affect; Likely to Adversely Affect Critical Habitat
Grizzly Bear	*Ursus arctos horribilis*	Threatened	No	No Effect
Canada Lynx	*Lynx canadensis*	Threatened	No	No Effect
North American Wolverine	*Gulo gulo luscus*	Proposed Threatened	No	Will Not Jeopardize the Continued Existence; No Effect if listed prior to completion.
Woodland Caribou	*Rangifer tarandus caribou*	Endangered	No	No Effect

Preliminary Draft for Agency Review

Introduction

The BNSF Sandpoint Junction Connector Project (Project) would consist of a 2.2-mile-long second main line track adjacent to (west of) the existing BNSF main line track to connect the Algoma main line track (milepost [MP] 5.1) south of Sandpoint, to the Sandpoint Junction switch (MP 2.9), where the BNSF and the Montana Rail Link (MRL) main lines converge in Sandpoint (**Figure 1**). Project Plans are provided in **Appendix A**.

The Project would entail constructing a second main line track; upgrading existing access roads, staging areas, tracks, switches and signals; constructing new bridges over Bridge Street (Bridge 3.0), Sand Creek (Bridge 3.1), and Lake Pend Oreille (LPO; Bridge 3.9) adjacent to (west of) the existing rail bridges; building temporary construction bridges adjacent to (west of) the new bridges; filling 0.88 acre of permanent nearshore area and 0.38 acre of temporary nearshore area below the jurisdictional ordinary high water mark elevation of 2,062.5 feet, associated with bridge abutments and the south switch; and filling 0.28 acre of wetland south of Bridge 3.1.

The purpose of the Project is to reduce the delay of freight and passenger rail traffic by increasing the operational efficiency of the BNSF freight rail system between its Algoma main line track south of Sandpoint (BNSF MP 5.1) and the Sandpoint Junction (MP 2.9), where BNSF and the MRL main line tracks join just north of the Sandpoint Amtrak Station.

The Project need is based on the existing infrastructures' ability to handle the previous growth of freight rail service demands in the BNSF northern tier, a high-volume traffic corridor between the Midwest (Chicago Terminus) and the West Coast. Rail traffic in this corridor has increased as a result of population growth and the corresponding increase in the demand for freight and will likely continue this trend. The existing bridges over Sand Creek and LPO have the physical capacity to move more trains, but additional train volumes would increase congestion and delays, negatively impacting North Idaho communities and communities throughout the BNSF network. If the constriction at this location is not addressed, the delay is expected to increase, resulting in a lower level of service for both rail and vehicle traffic and further constraining the movement of goods and services at a local, regional, national, and international level.

Deteriorating rail service may also cause shippers with alternative options, such as consumer product containers, to convert to highway transportation by truck. One double-stack intermodal train carries the same cargo as 280 trucks that would be diverted to publicly funded highways, producing negative highway congestion, economic, and safety impacts.

Preliminary Draft for Agency Review

Figure 1: Project Overview

Preliminary Draft for Agency Review

Consultation History

The U.S. Coast Guard (USCG) is the lead federal agency associated with this action and would complete formal consultation with the U.S. Fish and Wildlife Service (USFWS) regarding potential Project-related effects to federally listed species and critical habitat. Jacobs Engineering Group Inc. (Jacobs) has had informal, technical assistance discussions with the USFWS to review impacts, methodology, and mitigation opportunities, including phone calls and email communications in August, September, October, and November 2017.

A Biological Assessment was submitted to the USCG on December 21, 2017, as part of the bridge permit application packet for the new Sand Creek and LPO BNSF bridges. The Biological Assessment was updated on April 10, 2018, and was included in the formal Joint Application Public Notice for the U.S. Army Corps of Engineers (USACE) 404 and Section 10 permitting review and the Idaho Department of Lands (IDL) Encroachment Permit process.

Informal meetings and communications with the USFWS between March and June 2018 culminated with a pre-Biological Assessment technical assistance meeting on July 20, 2018, at the USFWS North Idaho field office located in Spokane, Washington.

Participants in that meeting (in person) included Marshall Williams and Katy Fitzgerald with the USFWS and Craig Broadhead, Sue PaDelford, and Diane Williams with Jacobs. Attendees via a teleconference line included Kris Swanson, Austin Hurst, and Matt Keim with BNSF and Shelly Sugarman, Steve Fischer, Danny O'Keefe, John Greene, and Kate O'Dell with the USCG.

The official USFWS Species List is provided in **Appendix B**.

Project Location

The Project is located in the Panhandle Basin, LPO Subbasin, Hydrologic Unit Code 17010214 Pend Oreille Lake, on the BNSF Montana Division, Kootenai River Subdivision, Line Segment 45, within the existing BNSF rights-of-way (ROWs) from MP 2.9+/– to MP 5.1+/– in Bonner County, Idaho (**Figure 2**).

Specifically, the Project is located within portions of Sections 15, 22, 23, 25, 26, 27 and 36; Township 57 North; Range 2 West, Boise Meridian and is within the incorporated limits of the City of Sandpoint and unincorporated Bonner County, Idaho. Latitudinal and longitudinal coordinates for the Project north end is 48°16'54.10" N,116°32'49.35" W and the Project south end is 48°14'56.24" N,116°31'24.02" W.

Preliminary Draft for Agency Review

Figure 2: Project Vicinity

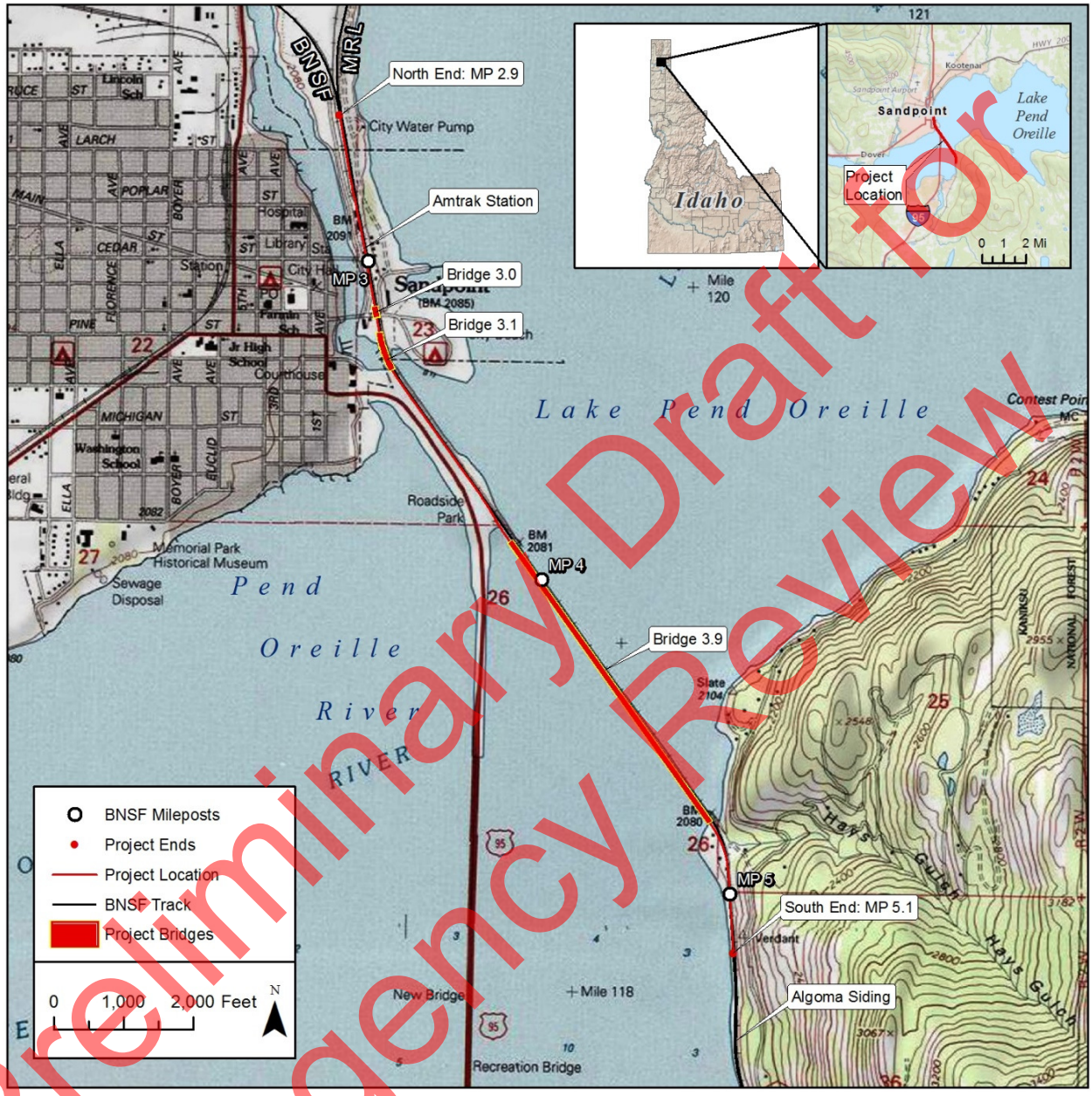

Preliminary Draft for Agency Review

Project Description

General Project Description

Existing Conditions and Structures

The current track configuration involves an MRL siding and two main line tracks, BNSF and MRL, meeting at the Sandpoint Junction (BNSF MP 2.9) just north of the Sandpoint Amtrak Station, becoming a single main line track through Sandpoint and over Sand Creek and LPO to the BNSF Algoma (East) main line track (BNSF MP 5.1) where the single main line transitions to two main lines. Key features of the Project corridor are described below:

- The north end of the Project (BNSF MP 2.9) is within the City of Sandpoint and is designated as an Urban Transportation Corridor.
- From BNSF MP 2.9 to 3.9, the existing BNSF main line track is surrounded by a BNSF maintenance road, the Sandpoint Amtrak Depot, U.S. Highway 95 (US 95), and the Sandpoint Marina to the west and Sandpoint Avenue, the Seasons of Sandpoint Condominiums, the Best Western Edgewater Resort, the Sandpoint Edgewater RV Park, and a portion of the Sandpoint City Beach Marina to the east.
- BNSF Bridge 3.0 spans Bridge Street in Sandpoint.
- BNSF Bridge 3.1 spans Sand Creek[1] in Sandpoint.
- BNSF Bridge 3.9 spans the open water of LPO from MP 3.9–4.9.
- The south end of the Project (BNSF MP 5.1) is designated as a Rural-Residential Transportation Corridor.

The existing BNSF Bridge 3.1 over Sand Creek is a fixed, single-track bridge measuring 155 feet long and 19 feet wide with four concrete piers, two of which are abutments. It was originally constructed in 1902 but was modified in 1990 with replacement of the superstructure, concrete pier caps, deck, and walk. The existing Bridge 3.9 is a fixed bridge that has both open-deck and ballast-deck spans and measures 4,769 feet long with 88 piers. Thirty-two of the original over 100-year-old, single-column concrete piers on wood pilings (16 on the north end and 16 on the south end of the bridge) were replaced in 2007 to 2008 with steel bents, each composed of six closed-end steel pipe piles. The existing bridge also has a non-operable swing span over the two existing, published 76.6-foot-wide navigation channels.

Preliminary Draft for Agency Review

[1] Sand Creek Tributary to Lake Pend Oreille; not to be confused with the Sand Creek tributary to Pack River.

Proposed Action

The Project construction to build the 2.2-mile-long second main line track west of the existing BNSF main line consists of the following general elements:

- Constructing a new main line track west of the existing BNSF main line track.
- Constructing a new bridge over Bridge Street (Bridge 3.0) adjacent to (west of) the existing rail bridge).
- Constructing a new bridge over Sand Creek (Bridge 3.1) adjacent to (west of) the existing rail bridge (**Figure 3**).
- Constructing a new bridge over LPO (Bridge. 3.9) adjacent to (west of) the existing rail bridge (**Figure 4**).
- Upgrading tracks, switches, and signals.
- Building temporary construction bridges over LPO and Sand Creek.
- Improving temporary construction material and equipment work staging areas.
- Filling 0.88 acre of permanent and 0.38 acre of temporary nearshore areas below the jurisdictional ordinary high water mark (OHWM) elevation of 2,062.50 feet, associated with bridge abutments and the south switch.
- Filling 0.28 acre of wetland in one location between the rail grade and the multiuse public pathway, south of Bridge 3.1.

Table 1 summarizes the general work sequencing and a 3-year construction timeline. The current proposed start date is Spring 2019. A construction timing table is provided in **Appendix C**.

Table 1: General Work Sequencing and Timeline

2019	Improve existing access and staging areas Wetland and nearshore structural fills Begin temporary work bridges
2020	Finish structural fills Finish temporary work bridge(s) construction Begin permanent bridge(s) pile driving
2020–2021	Finish permanent bridge(s) pile driving Install permanent bridge spans Track and infrastructure construction Remove temporary work bridge (3.1) before summer pool 2021
2022	Finish track and infrastructure construction Remove temporary work bridge (3.9) Remove temporary fill, stabilize, and restore Demobilize construction equipment and materials

The Project schedule would primarily be determined by the contractor awarded the Project. However, there are some general expectations of the overall timeline. The critical path item is construction of Bridge 3.9 over LPO. Other Project work items can, for the most part, be completed concurrently.

Preliminary Draft for Agency Review

Figure 3: Simulation of new Bridge 3.1 over Sand Creek between US 95 and existing Bridge 3.1

Figure 4: Simulation of new Bridge 3.9 from the north shoreline of the Pend Oreille River

Preliminary Draft for Agency Review

Construction for the work bridges would take approximately 12 months, dependent on weather or other interruptions to complete. After a 4-month head start on the work bridges, the new bridges' overall construction would take approximately 36 months or 3 years. This schedule allows for minimal or no production over a 2- to 3-month period each winter. Work vehicles and equipment for upland activities such as grading and rail grade embankment developing would be typical of heavy construction. Nearshore, in-water, and over-water equipment would be typical of specialized bridge construction.

The Project would require the use of a wide array of construction equipment. **Table 2** includes a list of Project equipment expected to be used on the site, as well as the expected use and the typical maximum in-air noise levels for each piece of equipment as measured from 50 feet away (Washington State Department of Transportation [WSDOT] 2018). If other types of equipment are needed during the Project, specifications, size, and noise levels would fall within the parameters of the equipment in **Table 2**.

Table 2: Construction Equipment List, Use, and Maximum In-Air Noise Levels

Equipment	Expected Use	L_{max} (dBA)
Backhoe	Access road and abutment construction	78
Chainsaw	Clear work area and construction pad	84
Compactor	Compact fill material for ramps, access roads, and staging areas	83
Compressor	Bubble curtain and hand tools	78
Concrete Mixer Truck	New abutments, piles, and decking	79
Concrete Pump Truck	New abutments, piles, and decking	81
Crane	Bridge construction, work trestles, piles, etc.	81
Drill Rig Truck	Geotechnical or subsurface investigation	79
Drum Mixer	Mix concrete or fill material	80
Dump Truck	Deliver supplies and remove rock and soil	76
Excavator	Access road and abutment work	81
Flat Bed Truck	Move supplies and bridge components	74
Front End Loader	Move supplies and bridge components	79
Generator	Power for hand tools and small equipment	81
Generator (<2kVA)	Power roadway signage	73
Vibratory Pile Driver	Installation and removal of in-water piles	101
Impact Pile Driver	Installation of upland and in-water piles	110
Lift	Access	75
Pickup Trucks	Construction worker site access	75
Pneumatic Tools	Power hand tools	85
Rock Drill	Rock removal	81
Roller	Compact fill for access roads	80
Welder/Torch	Welding of steel bridge components	74

Notes:
dBA = A-weighted decibel
L_{max} = highest time-weighted sound level measured

Preliminary Draft for Agency Review

Construction Elements

Table 3 summarizes the timing and duration of Project construction and work activities, assuming a 3-year construction period. However, construction could take up to 3 years and is subject to change based upon the work plan developed by the construction contractor.

Table 3: Project Elements (Estimated Timing and Duration)

No.	Project Element	Timing	Work Description
1	Mobilize and Improve Access Roads and Staging Areas	2019: March, April, May	• Minor expansion/improvement of existing BNSF roads/staging areas • Land clearing for safety and staging
2	Identify Work Limits	2019: March, April, May	• Stake/flag work limits in jurisdictional areas • Stake/flag best management practice (BMP) protection locations
3	Install Environmental BMPs	2019: March, April, May	• Install upland perimeter protection BMPs throughout the Project, and, in particular, adjacent to jurisdictional areas not being impacted by the Project
4	Vegetation Removal	2019: March, April, May	• Riparian vegetation removal in nearshore and wetland fill areas. • Upland vegetation removal for placement of structural rock fill.
5	Nearshore and Wetland Fills	2019: March, April, May	• Place fill during lake drawdown when no water is present in the impacted area: - 0.38-acre temporary nearshore fill - 0.88-acre permanent nearshore fill - 0.28-acre permanent wetland fill • Install perimeter water quality BMP at the edges of fill
6	Upland Work Adjacent to Nearshore and Wetland Fills	2019: May and June	• Upland work associated with bridge abutments • Grading for new rail grade
7	Construct Temporary Work Bridge 3.1 (Sand Creek)	2019–2020: start in October; start in 2020 for pile removal and reinstallation in the navigation channel	• 48, 24-inch-diameter steel piles, up to 40 extend below the ordinary high water mark (OHWM) • Vibratory pile driver; 10 piles (1 per pier) to be proofed with an impact hammer • Estimate 1-month duration for pile driving, dependent on weather or other interruptions. • Work to occur during daylight hours • Drive piles below the OHWM during winter pool/low water conditions, where possible • Remove piles/spans directly over and immediately adjacent to the navigation channel by May 2020 (if still in place at the start of the boating season) and reinstall in October 2020 if needed. • Piles to be slowly vibrated out of creek bed during winter pool/low water conditions and stockpiled in upland staging areas

Preliminary Draft for Agency Review

Table 3: Project Elements (Estimated Timing and Duration (continued)

No.	Project Element	Timing	Description of Work
8	Construct Temporary Work Bridge 3.9 (LPO)	2019–2020: Year round, weather permitting	• 700, 24-inch-diameter steel piles; 600 extend below the OHWM • Vibratory pile driver; 76 piles (1 per pier) to be proofed with an impact hammer • Estimate 1-year duration for pile driving, dependent on weather or other interruptions. • Work to occur during daylight hours • To remain in place up to 3 years (i.e., 2022)
9	Construct New Bridge 3.1 (Sand Creek)	2019–2020: Assumes two low water, lake drawdown construction seasons	• 64, 24-inch-diameter steel piles; 22 below the OHWM • Piles vibrated to resistance then driven with an impact hammer • Work to occur during daylight hours • Estimate 1-month duration for pile driving, dependent on weather or other interruptions. • Drive piles below the OHWM during winter pool/low water conditions, where possible • Construction primarily during low water season(s) • Bubble curtains/turbidity curtains used when pile driving in water 2 feet deep or more • Pile driving may occur at either end, but likely at the south end towards the north
10	Construct New Bridge 3.9 (LPO)	2020–2022: Year round, weather permitting	• 288, 36-inch-diameter steel piles; all below the OHWM • Piles vibrated to resistance then driven with an impact hammer • Work to occur during daylight hours • Bubble curtains/turbidity curtains used when pile driving in water 2 feet deep or more Estimate 6-month duration for pile driving, dependent on weather or other interruptions. • Work to start prior to completion of temporary work bridge • Piles may be driven simultaneously at either bridge end • Cast-in-place concrete deck
11	Remove Temporary Work Bridge 3.1 (Sand Creek)	2021: February, March, April	• Dismantle temporary bridge spans • Piles to be slowly vibrated out of creek bed during winter pool/low water conditions • Turbidity curtains to be used during pile removal in water 2 feet deep or more • Materials removed to staging areas until Project demobilization
12	Remove Temporary Work Bridge 3.9 (LPO)	2021–2022: Year round, weather permitting; start July/August	• Dismantle temporary bridge spans • Piles to be slowly vibrated out of lakebed • Full containment turbidity curtains to be used during pile removal • Materials removed to staging areas until Project demobilization

Preliminary Draft for Agency Review

Table 3: Project Elements (Estimated Timing and Duration (continued)

No.	Project Element	Timing	Description of Work
13	Remove Temporary Nearshore Fills	2022: October	• Remove in the dry during winter drawdown when no water present in impacted areas: • Install BMPs to prevent sedimentation to LPO or Sand Creek
14	Demobilize and Stabilize/Restore Disturbed Areas	2022: October to November	• Final grading • Removal of access road fills and temporary at-grade crossings • Seeding/mulching and native riparian plantings • Removal of temporary fencing, signage, etc. • Performed during low/no water conditions as necessary • Materials removed from staging areas • Staging areas restored to BNSF standards

Preliminary Draft for Agency Review

Detailed Project Description – Construction Key Elements

The construction process includes the proposed Project actions: mobilizing equipment and materials needed for construction, reestablishing and improving existing access roads at the north and south ends of the Project corridor; improving staging areas within the existing BNSF ROW; constructing temporary work bridges; constructing new, permanent bridges; removing temporary work bridges; restoring the site; and demobilizing.

A contractor has not been identified for this Project. However, elements 7 through 13 describe the bridge construction operations based on current planning and design by BNSF and their design team. Following are the key elements of the construction process, listed in the proposed chronological order:

1. Mobilize and Improve Access Roads/Staging Areas
    a. Access roads and staging areas in the existing BNSF ROW would be improved to accommodate Project-specific construction needs. The Project north end access is via Bridge Street, east of First Avenue in Sandpoint, and north onto Railroad Avenue towards the Amtrak Depot. A BNSF-owned maintenance area is just north of the depot. The south end access to the Project is via Bottle Bay Road, off of US 95, south of the Long Bridge, to Glen Eden Road, a private road with restricted public crossing of the BNSF ROW (**Figure 5**).
    b. Project access and staging improvements may include reconditioning the existing rock surfaces, improving entry/exit locations for safety (e.g., line of sight clearing), and implementing Project-specific environmental protection measures such as placing rock at construction entrances/exits to avoid off-site sediment tracking and establishing easily accessible emergency containment/cleanup materials for vehicles, equipment, and staged petroleum fluids.
    c. Mobilization of equipment and delivery of Project materials to staging areas would be an ongoing process during construction.
2. Identify Work Limits
    a. Work limits (cut/fill) as per plan and regulatory permits or conditions would be staked and flagged prior to the start of earth-disturbing activities. These areas would be reviewed on-site with the contractor to verify equipment operations and earth-disturbing/fill activities are compliant and within the limits.
    b. Stakes and flagging would be replaced or refreshed by the Project environmental compliance lead as needed throughout construction.
3. Install Environmental Best Management Practices (BMPs)
    a. When work limits are marked, the contractor would install temporary environmental protection BMPs, such as sediment fencing and filter rolls, along the grading/fill work limits adjacent to nearshore and wetland fills.
    b. Clearing and grubbing of existing vegetation would be the minimum required to construct the Project. Grubbed materials would be removed to upland areas within the BNSF ROW or removed to off-site, upland locations in accordance with BNSF environmental requirements for material movement out of the BNSF ROW.

Preliminary Draft for Agency Review

Figure 5: Construction Staging Areas and Access Points

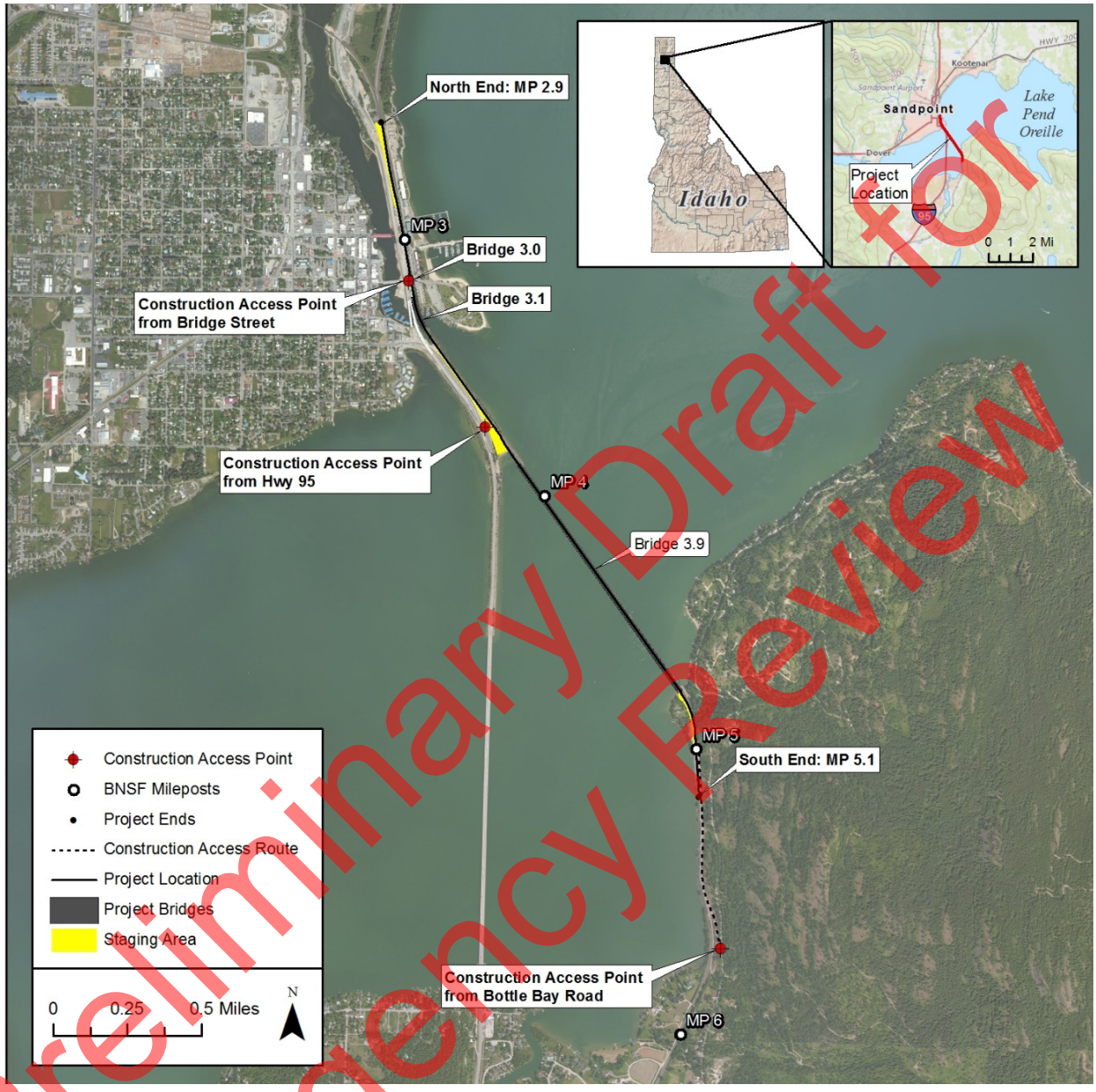

Preliminary Draft for Agency Review

4. Vegetation Removal
    a. Riparian vegetation removal in the nearshore and wetland fill areas would be the minimum needed. Vegetation would be cleared and grubbed using backhoes, bull dozers, or machinery appropriate for the specific location. Equipment access would be from adjacent upland areas. Cleared/grubbed materials would be loaded into haul trucks for removal to upland locations within the BNSF ROW or off-site, when those locations have been approved by BNSF and the Project environmental compliance lead.
    b. Upland vegetation removal would be the minimum necessary for placement of structural rock fill, as per the Project plan and specifications. Large trees would be cut with chainsaws into manageable pieces for removal, via work trucks, to upland locations within the BNSF ROW prior to removal to approved off-site locations. Smaller-sized shrubs and grasses/weed cover would be grubbed and cleared using bulldozers, backhoes, graders, or other similar earth-moving equipment. Clearing/grading depths would be specified in the design, generally to native rock or rocky soil suitable for railroad grade construction. Grubbed stumps or rootwads would be taken to upland staging areas within the BNSF ROW, via haul trucks, for stockpiling prior to removal to off-site upland locations approved by BNSF and the Project environmental compliance lead.
5. Nearshore and Wetland Fills
    a. Only clean, structural rock fill would be used, as required for construction of railroad grades. Fill material would be sourced from local commercial quarries approved for use in main line railroad construction.
    b. Fill would be placed according to plan and in compliance with regulatory permits. Fill would be brought to the Project via haul/dump trucks with grading/compaction completed by bulldozers, graders, and roller/compactors. Fill sequencing would be according to plan and in accordance to main line railroad construction standards.
    c. Fill work in nearshore and wetland areas would be done during LPO drawdown or low-water conditions when no water is present in the fill locations. Fill in adjacent upland locations would be done when the nearshore/wetland fill is completed and compacted in accordance to railroad standards.
    d. BMPs to prevent sedimentation from the fill into adjacent regulatory areas would be implemented prior to fill placement. These would be identified in the Project Stormwater Pollution Prevention Plan (SWPPP) and Water Quality Monitoring and Protection Plan (WQMPP). BMPs such as sediment filter fencing, sediment filter rolls, rock filter berms, vegetation filter berms, or other perimeter protection measures would contain fill materials within the staked/flagged/marked work limits. These temporary BMPs would be kept in place until high water, summer pool lake levels are reached to contain potential “first flush” sedimentation from the newly placed rock materials. Prior to the regulated lake levels covering the BMPs and after “first flush” sediment settling, these temporary BMPs would be removed so they do not become a navigation hazard.

Preliminary Draft for Agency Review

6. Upland Work Adjacent to Nearshore/Wetland Fills
   a. Grading and compacting for the new rail grade development would be done after nearshore/wetland fill actions are complete during lake drawdown. Clean, structural rock fill would be used in accordance to railroad construction standards. Fill material would be sourced from local commercial quarries approved for use in main line railroad construction.
   b. Fill would be placed in locations/work limits according to plan and in compliance with regulatory permits. Fill would be brought to the work sites via haul/dump trucks and equipment for grading/compaction would be done by bulldozers, graders, and roller/compactors in a sequence according to standard practices for main line railroad construction.
   c. BMPs to prevent sedimentation to jurisdictional areas adjacent to upland fill locations would be installed before fill work starts. The BMPs would be maintained throughout the Project until complete. When possible, as rail grade development is completed, final restoration/stabilization BMPs would be implemented—such as final seeding/mulching and/or rock cover. If upland areas are unworked for more than fourteen days during the summer/fall (i.e., dry season) or seven days during the winter/spring (i.e., wet season) temporary seed/mulch cover would be implemented.
   d. BMPs to avoid impacts via construction-related stormwater runoff would be implemented and maintained during work activities.
7. Construct Temporary Work Bridge 3.1 (Sand Creek)
   a. A temporary timber deck work bridge would be constructed immediately adjacent to and west of the new Sand Creek bridge location. The Sand Creek temporary work bridge would measure approximately 510 feet long and 32 feet wide with eleven 48-foot-long spans. The temporary work bridge would be supported by 10 piers partially or fully below the OHWM. Eight piers would consist of 4, 24-inch-diameter, open-ended steel pipe piles, and two piers would consist of 8, 24-inch-diameter, open-ended steel pipe piles. In total, 30 to 40 piles would be below the OHWM to account for minor adjustments in span support needs and site conditions. The temporary work bridge would support large cranes that would be working to construct the new, permanent bridge over Sand Creek.
   b. Generally, the work bridge would be used to gain access from the south side of Sand Creek, from an existing maintenance road and work pad west of the existing BNSF tracks. North side access would be developed off of Bridge Street, but would likely be used as a backup. The expected primary access point would presumably be from the south.

      Construction of the work bridge would likely start from the south side of Sand Creek, progressing north. The ends of the work bridge would consist of a temporary bulkhead at the water's edge that is filled to the existing grade or higher, as necessary. This would require permanent fill at the south end and temporary fill along the north end.

      Construction of the work bridge would be done in "leapfrog" fashion. The crane would advance a pile-driving template for every span. Once the template is in place, the support piles would be driven in the proper location. Four support piles are typical and have been assumed for this Project. Project-specific geotechnical data presumes that after a few days in place, the piles would have adequate strength for heavy loading.

Preliminary Draft for Agency Review

After the support piles are in place, the bracing would be installed and pier caps would be secured on top of the piles. Next, the beam groups would be placed from the temporary bulkhead to the first bent and secured to the foundations. Finally, the timber deck would be placed out to the first pier, and a safety handrail would be installed. At this time, the crane would be able to move out to the end of the work bridge and the entire process would be repeated for subsequent spans.

c. The work bridge would be constructed as noted and extended to the north end of the new bridge. The proposed work bridge deck construction system would be fully contained. Plastic sheeting would be installed between the deck timbers and the plywood to seal the deck. The bull rail (sides of the work bridge) would have foam rope under them and be tightened down to provide another level of sealed containment.

d. Once the work bridge reaches the north end, the production pile driving for the new, second bridge would commence and work from north to south. The temporary work bridge piles would be vibrated to resistance, and one pile per pier would be proofed with an impact hammer at an estimated 20 to 50 strikes for a short duration. Impact and vibratory pile driving would occur during daylight working hours. Assuming that two temporary work bridge piles can be driven per day, pile driving is expected to occur for about a month for the Sand Creek temporary work bridge, dependent on weather or other interruptions.

e. With the pile-driving activity, short, temporary retaining walls would be constructed at each pier, along the upland side (east) embankment so that the existing track stability is not adversely affected. Once enough piles are placed and their capacity is confirmed, the precast pile caps could be installed. After caps are placed, the precast concrete or steel beams, steel walkway, and handrail could be erected.

f. The Sand Creek temporary work bridge marked and lighted navigation channel would be limited to the period when no navigational access up Sand Creek is available, from approximately October 15 to April 15, depending on the Albeni Falls Dam fall LPO drawdown and spring fill. The Albeni Falls Dam is approximately 25 miles downstream from the Project, on the Pend Oreille River, and regulates the ordinary high water and ordinary low water levels of LPO. The temporary work bridge over the marked and lighted navigation channel for Sand Creek would be removed between April 15 and October 15. As a result, the temporary work bridge would not impact navigation for marine traffic in Sand Creek as it would not be an obstruction when navigational access up Sand Creek is available.

8. Construct Temporary Work Bridge 3.9 (LPO)

a. A temporary timber deck work bridge would be constructed immediately adjacent to and west of the new LPO bridge location. The LPO temporary work bridge would measure approximately 4,800 feet long and 32 feet wide, with 101 approximately 48-foot-long spans and one 24-foot-long span at the north end. Additionally, eight 64-foot-wide staging set-outs would be installed at approximately 500-foot intervals along the bridge for safety and material staging and to provide continuous through-access for the length of the temporary work bridge.

b. The temporary work bridge would support large cranes that would be working to construct the new, permanent bridge over LPO. The temporary work bridge would maintain a 42-foot horizontal and 15-foot vertical clearance at the location of the marked navigation channel under the exiting bridge.

Preliminary Draft for Agency Review

c. Construction of the work bridge would likely start from both the north and south ends of the Project over LPO. The end of the work bridge would consist of a temporary bulkhead at the lake's edge. This work requires both temporary and permanent fill to the existing grade or higher, as necessary.

   Construction of the work bridge would be done in "leapfrog" fashion. The crane would advance a pile-driving template for every span. Once the template is in place, the support piles would be driven in the proper location. Four support piles are typical and have been assumed for this Project. Project-specific geotechnical data, presumes that after a few days in place, the piles would have adequate strength for heavy loading. After the support piles are in place, the bracing would be installed and the pier cap secured on top of the piles. Next the beam groups would be placed from the abutment to the first bent and secured to the foundations. Finally, the timber deck would be placed out to the first pier and the handrail would be installed. Once these items are complete, the crane would move out to the end of the work bridge and the entire process would be repeated for subsequent spans. If the process is started from each bank at the same time, it is conceivable that the two bridge segments would be joined near the middle of the Project corridor over LPO.

d. There would be a time lag for when the work bridge has been extended out far enough from the bank and the piles have gained enough strength to support additional equipment and material for construction of the new, second bridge. Once this occurs, the production phase would begin.

   A work bridge deck system that would potentially be used would be fully contained. Plastic sheeting would be installed between the deck timbers and the plywood to seal the deck. The bull rail (sides of work bridge) would have foam rope under them and tightened down to provide another level of sealed containment.

   The temporary bridge piles would be vibrated to resistance, and one pile per pier would be proofed with an impact hammer at an estimated 20 to 50 strikes for a short duration. The work bridge would require 700, 24-inch-diameter steel pipe piles, with six hundred of the piles being installed in water.

   Impact and vibratory pile driving would occur during daylight working hours. Assuming that two temporary bridge piles can be driven per day, pile driving is expected to occur for an estimated one calendar year for the LPO temporary work bridge, dependent on weather or other interruptions.

   The vertical clearance of the LPO temporary work bridge would gradually rise from the abutments. Spans 1 through 16 at the north end of the bridge would have less than 10 feet of vertical clearance, with the maximum vertical clearance (low chord) gradually rising from 10 to 15 feet for Spans 17 through 67. Spans 68 through 71 would provide 15 feet of vertical clearance, with the low chord gradually lowering back down from 15 feet to 10 feet at the south end for Spans 72 through 101.

   The LPO temporary work bridge would be constructed first and would remain in place until the new, second bridge is placed into service. The temporary work bridge went through many design iterations to identify the least impacts to navigation while providing a safe working platform for the large, heavy equipment required to construct the new LPO railroad bridge. The majority of the work bridge would retain an equivalent vertical and horizontal clearance as the existing railroad bridge during construction.

Preliminary Draft for Agency Review

All marine traffic that now passes below the existing bridge would be able to pass under the temporary work bridge throughout construction. Signage, lighting, and other notices would be in place to direct marine traffic on LPO away from restrictive spans to the safe, non-restrictive boating passage spans.

9. Construct New, Second Bridge 3.1 (Sand Creek)

   a. The new, second bridge over Sand Creek would be constructed approximately 35 feet west of the existing rail bridge in existing BNSF ROW and measures approximately 505 feet long by 21 feet wide. The new bridge would be supported by 11 piers, each consisting of open-ended, 24-inch-diameter steel pipe piles. Two piers within the OHWM of the creek channel would consist of eight piles each; seven piers (one partially or wholly within the OHWM and six fully upland) would consist of six piles each; and two piers upland of the OHWM would consist of three piles each. A total of 64 piles would be placed, with 22 below the OHWM. Piles within the main channel of Sand Creek would be driven during low-water conditions/winter pool elevation.

      Two of the bridge bents would be fully within the Sand Creek navigational channel. The new bridge navigational horizontal clearance is 74 feet; the existing bridge has an approximately 45-foot-wide horizontal clearance. Vertical clearance of the new bridge would match the vertical clearance of the existing bridge, which is 17 feet above the 2,062.5-foot OHWM elevation. The new Sand Creek bridge piles would be vibrated to resistance into the creek bed and finished with an impact hammer with an average of 1,200 strikes per pile. Pile driving would occur during daylight working hours. Assuming that up to two piles could be driven per day, pile driving would occur for about 1 month, dependent on weather-related, or other, interruptions.

      Generally, a new rail bridge consists of four primary elements, working from the bottom up: installing piles, installing pier caps, pre-cast beams and deck, and installing the pile bracing. The first element is pile installation, which consists of vibrating to resistance, impact-hammer driving to load specifications, and proofing/testing to verify that load-bearing criteria has been met. A pile template would be installed at each new pier location. The pile template would likely have four temporary piles with a steel frame installed on top to correctly position the new permanent piling. Due to the long lengths of new pile required, the piles would be delivered to the work site by trucks to the Project staging areas and then to the pile placement locations as needed via the temporary work bridge. The sections would be welded as they are driven to form one long pile. The first section is driven before the second section is held in place and welded to the first. The third section is then welded to the pile and driving of that pile is completed. Each pier would have six piles. The pile bracing may be installed any time after the piles are complete, but this would likely occur during LPO drawdown or low water periods.

   b. Once the pile capacity has been verified through impact testing, the top of the piles would be cut off at the proper elevation and the precast pile cap can be installed. This is done by lifting the cap from the work bridge and setting it onto the piles before welding the bottom of the cap to the top of the piles.

   c. When at least two pier caps have been installed, erection of the precast concrete beams and bridge deck may begin. Depending on length, there are four or five beams per span and would be connected to each other with steel diaphragms that bolt to the beam. The beams would rest on bearings that are anchored into the pier caps. Ballast and track would be placed directly on the deck structure.

Preliminary Draft for Agency Review

d. These four bridge construction elements would generally follow each other in a linear fashion for the construction of the new, permanent Bridge 3.1 over Sand Creek.

10. Construct New, Second Bridge 3.9 (LPO)

a. The new, second bridge over LPO would be constructed approximately 50 feet west of the existing rail bridge in existing BNSF ROW and measure approximately 4,874 feet long by 18 feet wide. The new bridge would have 49 spans: forty-two 104-foot long, six 75-foot-11-inch long, and one 47-foot-10-inch long.

b. Each pier bent would consist of 6, open-ended, 36-inch-diameter steel pipe piles for a total of 288 piles below the regulated summer pool elevation of 2,062.5 feet that makes up the jurisdictional OHWM of the lake. The new piers would align approximately with every other pier of the existing bridge.

c. The new, permanent LPO bridge would have 10 spans at, and adjacent to, the designated navigation spans on the existing bridge that would closely match those longer-span horizontal clearances. The low chord of the new bridge would be 15 feet above the regulated summer pool elevation of 2,062.5 feet. These 15-foot clearances would consist of six 75-foot-11-inch spans, four of which would align with the existing rail bridge's 77-foot spans that are equal to or greater than 15-foot vertical clearance. The new bridge would not reduce the horizontal or vertical clearance over the marked navigation channel under the existing bridge.

d. Generally, a new rail bridge consists of five primary elements, working from the bottom up: installing piles, installing pier caps, setting beams, casting the concrete deck, and installing the pile bracing. The first element is pile installation, which consists of vibrating to resistance, impact-hammer driving to load specifications, and proofing/testing to verify that load-bearing criteria has been met. A pile template would be installed at each new pier location. The pile template would likely have four temporary piles with a steel frame installed on top to correctly position the new permanent piling. Due to the long lengths of new pile required, the piles would be delivered to the work site by trucks to the Project staging areas and then to the pile placement locations as needed via the temporary work bridge. The sections would be welded as they are driven to form one long pile. The first section is driven before the second section is held in place and welded to the first. The third section is then welded to the pile and driving of that pile is completed. Each pier would have six piles. The pile bracing may be installed any time after the piles are complete, but this would likely occur during LPO drawdown or low water periods.

e. Once the pile capacity has been verified through impact testing, the top of the piles would be cut off at the proper elevation and the precast pile cap can be installed. This is done by lifting the cap from the work bridge and setting it onto the piles before welding the bottom of the cap to the top of the piles.

f. When at least two pier caps have been installed, erection of the precast concrete beams may begin. Depending on length, there are four or five beams per span and would be connected to each other with steel diaphragms that bolt to the beam. The beams would rest on bearings that are anchored into the pier caps.

g. Next the bridge deck construction would commence. The deck is nominally 13 feet wide by 76 or 104 feet long and 8 inches thick. Concrete formwork would be installed between and outside the beams. Then reinforcing bar would be tied in place on the formwork. Once all elements are checked for conformance with the design plans, the concrete would be placed with the use of a concrete pump, supplied by concrete trucks, from the temporary work bridge. A second concrete placement activity, via a concrete pump

Preliminary Draft for Agency Review

system/concrete truck support, would potentially be required for each span to construct the curbs on the outside of each deck. Once these items are complete, the temporary formwork would be removed. Finally, the steel handrail would be installed on the outside face of each curb.

h. The five-bridge construction elements would generally follow each other in a linear fashion. Because Bridge 3.9 is so long, it is likely that pile driving would be occurring at the same time the concrete deck is being installed, i.e., all five primary bridge elements may be occurring at the same time.

i. The new, permanent LPO bridge would require vibrating 288 piles to resistance into the lake bed and finishing with an impact hammer with an average of 1,600 strikes per pile. All piles would be installed in water. Pile driving would occur during daylight working hours. Assuming that up to two piles could be driven per day, pile driving would occur for at an estimated 6 months, dependent on weather-related or other interruptions. Air bubble curtains would be used during impact pile driving to attenuate in-water SPLs (when water is more than 2 feet deep; WSDOT 2018), and a turbidity curtain would surround the area where bubble curtains would be utilized.

Table 4 summarizes the pile driving and installation details for both temporary and the new, second Bridge 3.1 (Sand Creek) and Bridge 3.9 (LPO).

Table 4: Number of Piles and Installation Detail

Action	Support Type (diameter)	Installation/Removal Method	Total Quantity	In-Water Quantity	Bubble Curtains (in water depth of 2 feet or more)
Temporary Work Bridges					
Bridge 3.1 Install and remove temporary work bridge piles.	24-inch Steel Pipe Pile (open-ended)	Install: Vibratory to refusal and impact hammer for proofing 10 piles (1 per pier); estimated 20–50 strikes per pile. Remove: Vibratory extraction.	48	Up to 40	No
Bridge 3.9 Install and remove temporary work bridge piles.	24-inch Steel Pipe Pile (open-ended)	Install: Vibratory to refusal and impact hammer for proofing 76 piles (1 per pier); estimated 20–50 strikes per pile. Remove: Vibratory extraction; turbidity curtains	700	600	No
Install and remove temporary platforms on west side of bridges (staging setouts).	24-inch Steel Pipe Pile (open-ended)	Install: Vibratory to refusal and impact hammer for proofing, estimated 20–50 strikes per pile. Remove: Vibratory extraction; turbidity curtains.	Included in overall temporary bridge pile quantities	Included in overall temporary bridge pile quantities	No

Preliminary Draft for Agency Review

Table 4: Number of Piles and Installation Detail (continued)

Action	Support Type (diameter)	Installation/Removal Method	Total Quantity	In-Water Quantity	Bubble Curtains (in water depth of 2 feet or more)
Permanent Bridges					
Bridge 3.1 Install bridge piles.	24-inch Steel Pipe Pile (open-ended)	Install: Vibratory to resistance and finished with an impact hammer, estimated 1,200 strikes per pile.	64	22	Yes
Bridge 3.9 Install bridge piles.	36-inch Steel Pipe Pile (open-ended)	Install: Vibratory to resistance and finished with an impact hammer, estimated 1,600 strikes per pile.	288	288	Yes
TOTAL			**1,100**	**950**	

11. Remove Temporary Work Bridge 3.1 (Sand Creek)
    a. Once all the new bridge construction elements have been completed, and the track has been installed, the contractor would begin removing the work bridge. For one span at a time, the deck is removed, then the beams, then the pile cap, and finally the piles. This process is repeated until complete. A crane would be used as the main piece of equipment during this disassembly process.
    b. The temporary work bridge components, deck sections first, would be stockpiled in upland staging areas for eventual removal from the site. The temporary work bridge piles would be removed using a vibratory extraction methodology further described in the Minimization Measures section.
12. Remove Temporary Work Bridge 3.9 (LPO)
    a. As with the temporary bridge over Sand Creek, the LPO temporary work bridge would be removed in sections when the new bridge construction is complete.
    b. Generally, this process would be the same as described for the Sand Creek Bridge 3.1 work bridge. Once all the new, permanent bridge construction elements have been completed, and the new main line track has been installed, the contractor would begin removing the work bridge.
13. Remove Temporary Nearshore Fills
    a. Temporary nearshore fills would be removed once temporary work bridge removal is complete and work space from adjacent upland areas is allowed. Backhoes with “thumb”’ attachments on the hoe portion or excavators would be used to remove the temporary fill material. This work would be done during LPO drawdown or low water conditions.

Preliminary Draft for Agency Review

14. Demobilize and Stabilize/Restore Disturbed Areas

    a. Concurrent with the disassembly of the temporary work bridges, final grading and track construction could be occurring in upland areas within the Project limits.

    b. Site restoration would include final grading and removal of temporary nearshore fills in areas adjacent to Sand Creek or LPO. These areas would be seeded and mulched with native riparian grass species and, where there is sufficient soil, riparian plantings of native trees and shrubs would be implemented. Sediment control BMPs would be installed around these areas until vegetation becomes established.

    c. When open soil areas are determined to be stable by the environmental compliance lead, temporary construction materials and BMPs such as fencing, signage, and erosion control products would be removed.

    d. Final inspection Project punch-list environmental items would also be addressed at this time prior to the contractor demobilization off of the Project site. Construction supplies and equipment would be removed from the staging areas and the contractor would demobilize off BNSF property. Staging areas would be restored to BNSF standards.

Preliminary Draft for Agency Review

Impact Avoidance and Minimization Measures

Avoidance Measures

The purpose of the Project is to reduce delay and improve operational efficiency between the two tracks at the north end of the BNSF Algoma main line (MP 5.1) and the BNSF Sandpoint Junction (MP 2.9) where the BNSF and MRL main lines converge. The proposed Project fulfills this purpose by improving the existing railroad corridor between MP 5.1 and MP 2.9.

The improved corridor must be of sufficient width to accommodate a second track that enables safe, adjacent operations for freight and passenger trains within the BNSF ROW. A minimum 15-foot-wide track center is required for adjacent simultaneous train operations on upland rail grade areas, and 30- to 50-foot-wide track centers are needed at bridge locations to ensure that the pile driving for the new bridges does not impact the integrity of the piles for the existing bridges. Since the Project crosses Sand Creek and LPO, in-water impacts cannot be entirely avoided.

Constructing the Project to the west of the existing track and bridges, rather than to the east, would avoid the placement of an estimated 3.82 to 5.82 additional acres of in-water fill as follows (taking into account a reduction of wetland fill of 0.28 acre south of Bridge 3.1):

- Additional nearshore fill of approximately 2.9 acres from Bridge 3.1 (Sand Creek) to Bridge 3.9 (LPO); approximately 0.5-mile of rail grade was already constructed on the west side of the tracks at the time of the US 95 Sandpoint bypass Project.
- Additional nearshore fill of approximately 1.2 acres for equipment and materials staging that would need to be brought in by barge over LPO (otherwise all Project equipment/materials would be brought in on Bridge Street in Sandpoint).
- Lake bottom excavation and fill of undetermined quantity (estimated up to 2 acres) for a large work barge landing area.

Constructing the Project within the existing BNSF ROW and within the proposed Project area would avoid the following:

- Development of a new transportation corridor outside of the existing BNSF ROW that would still have to cross Sand Creek and LPO.
- Additional environmental impacts at newly acquired properties for a new 100-foot-wide ROW that may have resulted in 13 to 18 acres of aquatic impacts.

Changes to initial Project designs avoided the following:

- Temporary nearshore fill of 0.17 acre by extending the southern-most span of the LPO temporary work bridge.
- Permanent nearshore fill of 1.97 acres by extending the north and south ends of Bridge 3.1, a design change to the north end and an extension to the south end of Bridge 3.9, and a design change to the Algoma Switch area at the south end of the Project.

Preliminary Draft for Agency Review

Minimization Measures

The Project-specific WQMPP and SWPPP would be implemented for the Project and would contain BMPs to reduce impacts to bull trout and designated bull trout critical habitat. These and other measures to be implemented include, but are not limited to, the following:

- MM1 - Removal of vegetation would be limited to what is necessary for Project construction and for safe operation of equipment.
- MM2 - Temporary and permanent nearshore fills would be placed, and temporary fills would be removed, during LPO drawdown or winter pool when no is water present in the fill impact areas.
- MM3 - In-water steel piles for the temporary and permanent work bridges would be driven to refusal with a vibratory driver. One pile per pier of the temporary work bridge (10 of 48 piles for Bridge 3.1; 76 of 700 piles for Bridge 3.9) and all piles for the permanent bridges would be proofed with an impact hammer. Primary use of a vibratory driver would reduce the amount and duration of in-water sound.
- MM4 – Where possible, piles for the Bridge 3.1 temporary work bridge and the new, permanent bridge would be driven during LPO lake drawdown/winter pool/low-water conditions since sound does not propagate well in shallow water. MM5 – During impact driving for the new, permanent Bridges 3.1 and 3.9, air bubble curtains would be used to attenuate sound.
- MM5 - Open-ended piles would reduce the number of strikes required to install the piles and thereby reduce the duration of in-water sound (Singh 2014; Karlowskis 2014; FHWA/IN/JTRP-2002 to 2004).
- MM6 - Dispersal strikes would be utilized when an impact hammer is used to proof and/or install temporary and permanent in-water piles to minimize the potential for fish to be in the vicinity when production pile driving occurs.
- MM7 - During impact driving in water that is greater than 2 feet deep turbidity curtains (silt curtains) would be utilized to minimize in-water sediment suspension (WSDOT 2018).
- MM8 - Silt curtains must be reliable, in good condition, and maintained. Use of silt curtains should be in accordance with manufacturer's guidance (Idaho Department of Environmental Quality [IDEQ] 2018).
- MM9 - Turbidity monitoring per ID WQ standards and the Project's 401 Water Quality Certification must be conducted to ensure silt curtains are functioning correctly.
- MM10 - Work would be performed during daylight hours; bull trout migrations are mostly nocturnal.
- MM11 - Bridge 3.9 temporary work bridge and the new, permanent bridge were designed at a height of 14 to 15 feet at the deepest part of LPO, which would allow penetration of ambient light during most of the day.

Preliminary Draft for Agency Review

- MM12 - To contain sediments when removing piles for the Bridge 3.1 temporary work bridge, piles would be slowly vibrated out of the creek bed, would be removed during winter pool low water conditions, and turbidity curtains would be used where possible.
- MM13 - To contain and settle sediments when removing piles for the Bridge 3.9 temporary work bridge, piles would be slowly vibrated out of the lakebed at a rate of approximately one-quarter inch per second and turbidity curtains would be used around each pile or bent being removed; curtains would be anchored to the lakebed for total water column seal and tied off to withstand maximum current conditions.
- MM14 - Existing staging areas and access roads on the BNSF ROW would be utilized to avoid additional impacts to environmentally sensitive areas.
- MM15 - A Temporary Erosion and Sediment Control Plan and BMPs would be installed to reduce erosion from exposed soils and maintained throughout Project construction.
- MM16 - The contractor would install and maintain BMPs to keep construction debris from entering waters of the United States.
- MM17 - A SWPPP would be implemented as part of the NPDES Permit (USEPA n.d.).
- MM18 - A WQMPP would be implemented as part of the 401 Water Quality Certification (IDEQ 2018).
- MM19 - A Spill Prevention, Control, and Countermeasure plan would be implemented to control and contain pollutants and product.
- MM20 - Prior to transport to the Project work site, equipment would be cleaned of accumulated grease, oil, or mud.
- MM21 - Equipment and machinery on the Project work site would be inspected daily to check for leaks or problems.
- MM22 - Equipment and machinery used in or over water would be pressure washed or steam cleaned of oils, grease, or other aquatic pollutants such as invasive species, in an upland location or staging area with appropriate wastewater controls and treatment prior to entering on or over waters of the United States (LPO or Sand Creek). Any wastewater or wash water would not be allowed to enter waters of the United States (IDEQ 2018).
- MM23 - Fully stocked petroleum containment spill kits would be kept and maintained on-site at power equipment work sites, portable fuel container sites, and construction staging areas during construction. Spill containment systems would be adequate to contain one and a half times the volume of fuel or fluids associated with each piece of equipment or machinery staged on the work bridge (USEPA n.d.; IDEQ 2018).
- MM24 - Full, secondary containment would be under equipment that use fuels or other hazardous materials on the temporary work bridge or within 100 feet of Sand Creek or LPO (USEPA n.d.; IDEQ 2018).
- MM25 - Equipment and machinery working on the temporary bridges would utilize biodegradable products when possible.

Preliminary Draft for Agency Review

- MM26 - Fuel containers would not be stored on the temporary work bridge. Fueling and maintenance work would occur with secondary containment when on the temporary work bridge. Fuel and hazardous material storage and staging would occur 50 feet away from waters of the United States within staging areas on the BNSF ROW.
- MM27 - Fuel containers or other hazardous materials would not be stored unsecured at the Project site during nonwork hours.
- MM28 - A concrete handling BMP would be developed and approved by the IDEQ prior to concrete pumping or pours associated with the new bridge sections (IDEQ 2018).
- MM29 - BNSF would assign an inspector to document that minimization measures proposed and/or conditioned by regulatory agencies are implemented, maintained, and adaptively managed as needed (USEPA n.d.).

Preliminary Draft for Agency Review

Mitigation Measures

As previously mentioned, the Project would result in a total of 0.28 acre of permanent wetland fill. The impacted wetland is not utilized by Endangered Species Act (ESA)-listed species, therefore, mitigation is related to Clean Water Act regulations. Per mitigation regulations outlined in Section 332.3 of Title 33 of the Code of Federal Regulations (33 CFR 332.3), compensatory wetland mitigation options should be considered in the following order: mitigation banks, purchasing in-lieu fee program credits, or creating permittee-responsible mitigation sites. A mitigation bank is available within the impacted watershed and would therefore be utilized to compensate for unavoidable impacts to the wetland.

BNSF plans to purchase 3.64 credits (Jacobs 2018) at the bank for compensatory wetland mitigation. The bank currently has approximately 1,000 credits available for purchase (Valencia Wetlands Trust 2017).

Proposed mitigation for 0.88 acre of nearshore fills would be satisfied via LPO and Sand Creek stakeholders through a consensus-based process, including but not limited to the USFWS, Idaho Department of Fish and Game (IDFG), and other participating non-government organizations. Ongoing stakeholder meetings and communications are focused on identifying current watershed projects that are underway and/or planned in the near future that are suitable and appropriate to mitigate impacts to affected nearshore areas and to threatened bull trout, and would provide the most benefit to the affected aquatic resources. The nearshore fill mitigation project would be identified in the future and would be performed under a separate permitting process.

Preliminary Draft for Agency Review

Action Area

ESA regulations define the term "action area" as all areas to be affected directly or indirectly by the federal action and not merely the immediate area involved in the action (50 CFR 402.02). The action area for the Project is based on all potential impacts from construction activities, both temporary and permanent, to terrestrial and aquatic species. The action area was delineated by evaluating the farthest reaching physical, chemical, and biotic effects of the action on the environment (**Figure 6**).

Temporary increases in noise and turbidity from pile driving and nearshore fills (when the first flush occurs) were identified as potential impact mechanisms. Turbidity would be localized to several feet around piles during pile-driving activities; therefore, noise would generate the outer extent of the actions in both terrestrial and aquatic environments. The loudest construction activity would be impact hammer pile driving to install steel pipe piles for Bridges 3.1 and 3.9.

Terrestrial Impact Zone

Ambient terrestrial noise levels in the Project area are influenced by the local population level, traffic volumes on US 95, rail traffic, and commercial enterprises. The local population center is the City of Sandpoint. US 95 is located adjacent to the north end of the Project and diverges from the rail line near the north end of BNSF Bridge 3.9 to about 2,500 feet west of the south end of Bridge 3.9. Ambient noise level projected at 55 A-weighted decibels (dBA) is expected based on the local population (Washington State Department of Transportation [WSDOT] 2018).

Typical noise levels for construction and equipment were obtained from Chapter 7.0, Construction Noise Impact Assessment, of WSDOT's Biological Assessment Preparation Manual (2018). The impact hammer produces noise levels at 110 dBA at 50 feet from the source. In the event that two simultaneous pile drivers are utilized, 3 dBA was added to the 110 dBA value resulting in 113 dBA as the highest noise level proposed during Project construction. Ambient noise within the study area includes vehicle traffic from US 95 and train traffic with peak noise levels of 140 decibels (dB), which represents a locomotive horn/whistle. Therefore, terrestrial construction noise would not surpass noise levels which are regularly experienced in the area. Since construction noise (use of the impact hammer) would result in a more frequent noise elevation than train whistles, a terrestrial noise assessment has been conducted.

The following formula was used to determine the extent of terrestrial noise (WSDOT 2018):

$$D = D_o \times 10^{[(\text{construction noise} - \text{ambient sound level in dBA})/\alpha]}$$

Where D = distance from the noise source

D_o = the reference measurement distance (50 feet in this case)

$\alpha = 25$ for soft ground and 20 for hard ground. For point source noise, a spherical spreading loss model is used. The alpha (α) values assume a 7.5 dBA reduction per doubling distance over soft ground and a 6.0 dBA reduction per doubling distance over hard ground.

$$\text{Distance (D)} = 50 \times 10^{[(\text{construction} - \text{ambient})/\alpha]}$$

Since the site is primarily surrounded by water which is considered a "hard site" in regards to noise analysis, a doubling distance of -6.0 dBA is used. For a hard site with a doubling distance of 6 dBA, 20 is used for α (WSDOT 2018). Ambient noise is 55 dBA and construction noise is 113dBA. **Table 5** summarizes these calculations.

Preliminary Draft for Agency Review

Distance from Construction Noise to Ambient Noise

$$\text{Distance (D)} = 50 \times 10^{[(\text{construction} - \text{ambient})/\alpha]}$$
$$D = 50 \times 10^{[(113 - 55)/20]}$$
$$D = 50 \times 10^{[2.90]}$$
$$D = 39{,}716 \text{ feet } (7.52 \text{ miles})$$

Table 5: Airborne Construction Noise Attenuation

Distance from Bridge (feet)	Construction Noise (attenuation = -6 dBA)	US 95 Noise (attenuation = -3 dBA)	Ambient Noise (dBA)
50	113 dBA	72.8 dBA	55
100	107 dBA	69.8 dBA	55
200	101 dBA	66.8 dBA	55
400	95 dBA	63.8 dBA	55
800	89 dBA	60.8 dBA	55
1,600	83 dBA	57.8 dBA	55
3,200	77 dBA	54.8 dBA	55
6,400	71 dBA	Below Ambient	55
12,800	65 dBA	--	55
25,600	59 dBM	--	55
51,200	53 dBM	--	55

Notes:
-- = not applicable
dBA = A-weighted decibel
dBM = decibels relative to one milliwatt

Using an ambient noise level of 55, construction noise would attenuate between 25,600 and 51,200 linear feet (4.8 and 9.7 miles) from the site or, more precisely, 39,716 feet (7.52 miles). This assessment does not consider topography or vegetated landforms. When considering topography, construction noise is anticipated to travel a maximum of approximately six miles, which is the furthest open-water distance between the bridge and an elevated landform.

Preliminary Draft for Agency Review

Figure 6: Action Area Map

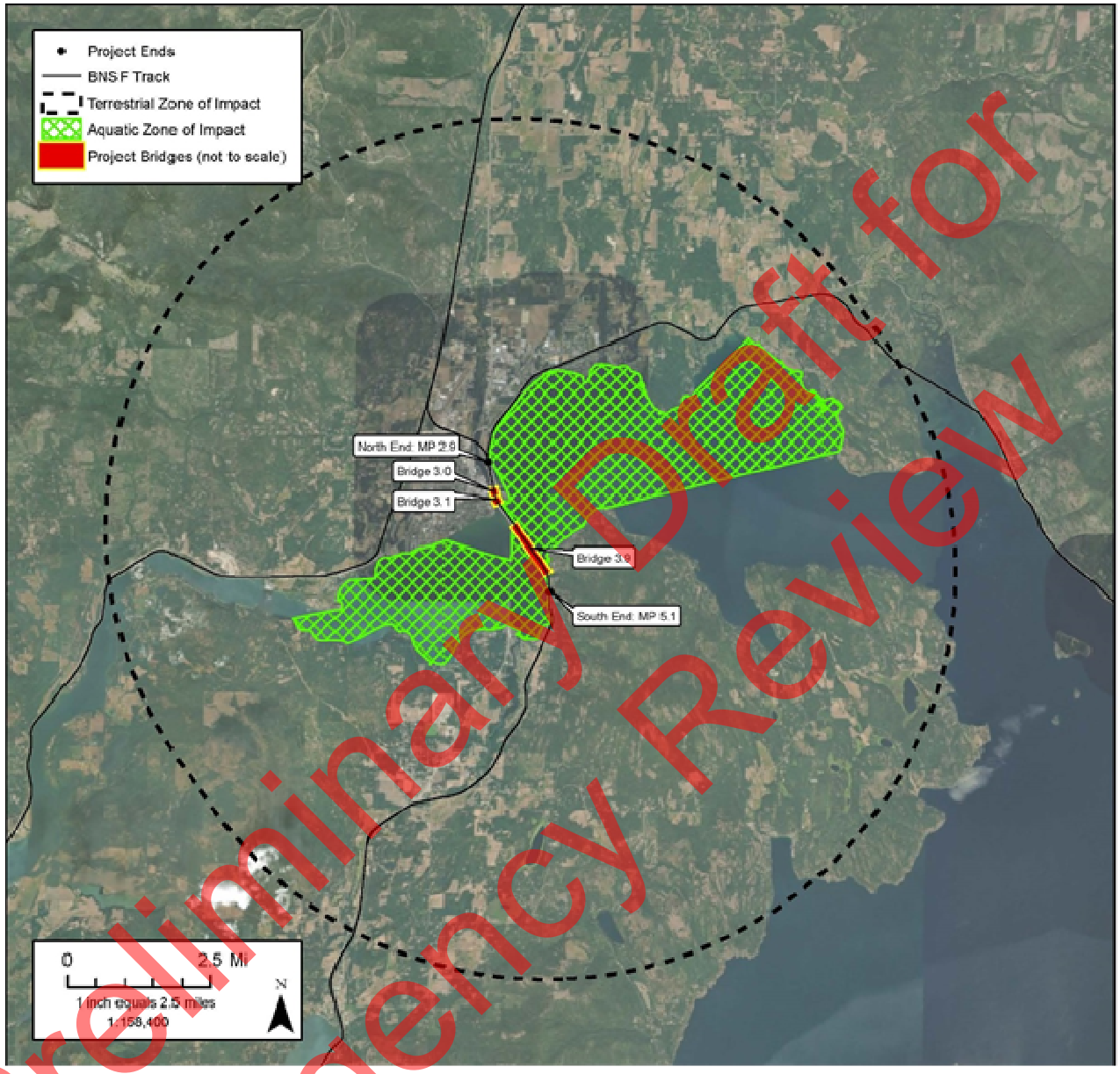

Preliminary Draft for Agency Review

Aquatic Impact Zone

The aquatic impact zone was delineated by evaluating the farthest-reaching physical, chemical, and biotic effects of the action on the environment, which was determined to be underwater SPLs from the loudest construction activity.

There would be four distinct pile installation activities for the Project, including temporary and permanent pile installation at Bridges 3.1 and 3.9. The temporary Bridge 3.1 would require 48, 24-inch-diameter steel piles, up to 40 extend below the OHWM. These would be installed with a vibratory pile driver and 10 piles (1 per pier) to be proofed with an impact hammer. The permanent Bridge 3.1 would require 64, 24-inch diameter piles with 22 located below the OHWM. These piles would receive up to 1,200 strikes per pile.

The permanent Bridge 3.9 would include 288, 36-inch-diameter steel piles, all below the OHWM, which would be vibrated to resistance then driven with an impact hammer and would utilize a bubble and turbidity curtain in water 2 feet deep or more. These piles would receive up to 1,600 strikes per mile. The temporary Bridge 3.9 would include 700, 24-inch-diameter steel piles but only 76 piles (1 per pier) would be proofed with an impact hammer. Impact pile driving is anticipated to take between 1 to 3 hours per pile that requires proofing.

For the purposes of defining a conservative action area, the highest SPLs associated with impact-driving steel pipe piles for Bridges 3.1 and 3.9 are assumed. Therefore, the aquatic impact zone includes the farthest distance that underwater sound would travel from impact pile driving activities at Bridges 3.1 and 3.9 until reaching land, or attenuating to background noise levels.

It is likely the contractor would impact drive piles at both ends of permanent Bridge 3.9 simultaneously, which would increase the SPLs within LPO. Underwater sound attenuation is modeled in the equation below. The National Oceanic and Atmospheric Administration (NOAA) Pile Driving Impact Calculator was also used to assess sound impacts to specific species (**Appendix D**) and that analysis is presented in the Direct Effects section. SPLs from impact pile driving at Bridge 3.9 create a majority of the action area within LPO; however, sound from pile installation at Bridge 3.1 would extend up into Sand Creek.

Impact driving a 36-inch-diameter steel pipe pile would generate the loudest underwater sound level of 193 dB RMS measured at 10 meters (WSDOT 2018). During previous improvements on Bridge 3.9, acoustic monitoring using a bubble curtain recorded a 3 dB reduction in sound levels. The 3 dB reduction is based on average results of underwater sound monitoring (**Appendix E**) conducted in July 2008, when bubble curtains were activated during impact pile driving while replacing piers at the south end of the existing Bridge 3.9 (Robert Miner Dynamic Testing, Inc. 2008). Background sound levels in deep freshwater lakes or deep, slow-moving rivers are approximately 120 dB root-mean-square (RMS), similar to marine levels near developed shorelines (WSDOT 2018).

The extent of the action area was modeled in the equation below using an ambient underwater noise level of 120 dB RMS and a 190 dB RMS measured at 10 meters (32.81 feet) associated with the 36-inch-diameter steel pile and the use of a bubble curtain. Applying the normal attenuation rate of 4.5 dBA per underwater doubling distance results in construction noise attenuation of 288 miles from the Project site.

Preliminary Draft for Agency Review

Distance from Construction Noise to Underwater Ambient Noise

$R_1 = R_2 \times 10^{[(\text{construction noise} - \text{ambient sound level in dBA})/\alpha]}$

R_1 is the range or distance at which the transmission loss is estimated

R_2 is the range or distance of the known or measured sound level

$\alpha = 15$, the alpha (α) value assumes a 4.5 dBA reduction per doubling distance underwater; therefore,

$R_1 = 10 \text{ meters} \times 10^{[(190 - 120)/15]}$

This distance does not consider bathymetry or landforms. The furthest distance construction noise is anticipated to travel is approximately 6 miles, which is the furthest open water distance between Bridge 3.9 and an elevated landform. The action area is defined by the farthest distance that underwater sound would travel before encountering land and would therefore extend out to the LPO shoreline (**Figure 6**). The aquatic impact zone is approximately 1 percent of the total water surface area of LPO.

Preliminary Draft for Agency Review

Environmental Baseline

Terrestrial Setting

While Project actions are limited to the BNSF ROW in upland areas, the terrestrial setting includes the action area which extends to a modeled 7.5 miles. Uplands in the action area are a patchwork of urban, urban fringe, and rural development, managed forest lands and minor amounts of undisturbed areas. The immediate Project area is primarily developed and consists of railroad tracks, gravel and paved parking areas, highway/roadways, and LPO. The cities of Sandpoint, Kootenai, Dover, and Sagle all occur within 7.5 miles of the Project. Aside from potential elevated noise levels, little disturbance would occur in terrestrial areas; therefore, they are not described in detail in the section.

Lake Pend Oreille

LPO is a natural, temperate, oligotrophic lake. It is the largest natural lake in Idaho and the fifth deepest lake in the United States, with a mean depth of 538 feet, a maximum depth of 1,152 feet at its southern end, and a surface area of 94,720 acres. It is fed by over 20 streams originating in the Selkirk Mountains to the northwest, the Cabinet Mountains to the northeast, and the Coeur d'Alene Mountains to the east, which comprise most of the largely undeveloped, steep, rocky terrain LPO's shoreline and littoral zone. The remaining littoral zone at the lake's northern end and bays consists of gradual or moderately sloping bottom, surrounded by flat to gently sloping upland and floodplain with residential and commercial development within the cities of Sandpoint, Ponderay, and Kootenai; the cities of Hope and Clark Fork (farther east); and within the unincorporated areas of Sagle (south of Sandpoint; McCubbins et al. 2016).

The Clark Fork River, originating in western Montana, is the largest tributary into the lake providing 92 percent of LPO's inflow at the river's mouth near the city of Clark Fork, northeast of Sandpoint. Three hydroelectric dams were constructed from 1913 to 1959 (Cabinet Gorge, Noxon, and Thompson Falls Dams), creating a series of impoundments on the lower Clark Fork River.

The Pend Oreille River is LPO's only surface water outlet west of Sandpoint near the city of Dover. The river flows approximately 27 miles from LPO in Idaho into eastern Washington, then north into Canada where it joins the Upper Columbia River. The Pend Oreille River is impounded by the Albeni Falls hydroelectric dam, constructed in 1955 near the Idaho-Washington border, which regulates the lake's surface elevation/pool at 2,062.5 feet from approximately mid-June through September, and at 2,051 to 2,056 feet from October through May. The Project area is in the shallowest portion of LPO where waters are likely the warmest.

A wide diversity of fish species is present in LPO. The native fish present are westslope cutthroat trout (*Oncorhynchus clarki lewisi*), bull trout (*Salvelinus confluentus*), mountain whitefish (*Prosopium williamsoni*), pygmy whitefish (*Prosopium coulterii*), slimy sculpin (*Cottus cognates*), peamouth (*Mylocheilus caurinus*), northern pikeminnow (*Pschocheilus oregonensis*), redside shiner (*Richardsonius balteatus*), longnose sucker (*Catostomus catostomus*) and largescale sucker (*Catostomus macrocheilus*).

Preliminary Draft for Agency Review

Non-native sport fish that have been stocked or found their way into the lake over the years include kokanee (*Oncorhynchus nerka* – a land-locked form of sockeye salmon), rainbow trout (*Oncorhynchus mykiss*), Gerrard-strain rainbow trout (Kamloops), lake whitefish (*Coregonus clupeaformis*), lake trout (*Salvelinus namaycush*), smallmouth bass (*Micropterus dolomieu*), and several other species present in low quantity including northern pike (*Esox lucius*), brown trout (*Salmo trutta*), largemouth bass (*Micropterus salmoides*), yellow perch (*Perca flavescens*), and walleye (*Sander vitreus*) (McCubbins et al. 2016).

Sand Creek

The Sand Creek watershed[2] covers 38 square miles or 24,209 acres, and includes Jack Creek, Little Sand Creek, Swede Creek, and Schweitzer Creek northeast of Sandpoint. Sand Creek generally flows from north to south for approximately 16 miles and discharges into LPO within the City of Sandpoint, where it is subject to the regulated levels of LPO.

Although it is known locally known as Sand Creek and is considered to be Sand Creek by the IDL (2017), federal agencies and the IDEQ consider the lower portion of Sand Creek, from LPO upstream to State Highway 200, as an inlet of LPO (USFWS 2018; IDEQ 2018).

The average gradient of Sand Creek is 1 percent and the primary channel substrate is sand. Land use consists of forestry, agriculture, and permanent grasslands with small areas of shrub land and barren land. The primary land use is agriculture/rural. Land ownership is mostly private, with the remainder of the watershed held by the City of Sandpoint, BLM, Idaho State, and USFS (IDEQ 2017).

The upper portion of the creek is surrounded by sparse residential development within the unincorporated areas of Bonner County, except for the Schweitzer Mountain Ski Resort, a large residential and commercial development located in the upper reaches of Schweitzer Creek. The lower, approximate four-mile portion of Sand Creek is surrounded by residential and commercial development within the cities of Sandpoint and Ponderay.

Preliminary Draft for Agency Review

[2] Sand Creek Tributary to Lake Pend Oreille; not to be confused with the Sand Creek tributary to Pack River.

Federally Proposed and Listed Species and Designated Critical Habitat

The Project is located across and along the northwestern section of LPO and immediately east and south of US 95 and the city of Sandpoint. Uplands in the action area are a patchwork of urban development and managed forest lands. Developed areas consist of railroad tracks, gravel and paved parking areas, urban and urban fringe development, and highways/roadways.

Species Excluded from Further Assessment

Table 6 identifies USFWS ESA-listed terrestrial species and designated critical habitat provided by USFWS species list in Bonner County, Idaho. The specific habitat conditions required for the federally listed ESA species noted in **Table 6** do not occur in the action area.

Table 6: ESA-Listed and Proposed Terrestrial Species and Designated/Proposed Critical Habitat

Common Name	Scientific Name	ESA Listing	Potential to Occur in Action Area	Determination
Canada lynx	*Lynx canadensis*	Threatened	No	NE
Grizzly bear	*Ursus arctos horribilis*	Threatened	No	NE
North American wolverine	*Gulo luteus*	Proposed Threatened	No	Will Not Jeopardize the Continued Existence
Woodland caribou	*Rangifer tarandus caribou*	Endangered	No	NE
Common Name	**Scientific Name**	**Critical Habitat**	**Critical habitat in Action area**	**Determination**
Canada lynx	*Lynx canadensis*	Contiguous United States DPS	No	NE
Woodland caribou	*Rangifer tarandus caribou*	Selkirk Mountain	No	NE

Notes:
DPS = Distinct Population Segment
ESA = Endangered Species Act
NE = No Effect

Preliminary Draft for Agency Review

Canada Lynx

The Canada lynx is a forest carnivore highly adapted to hunting its primary prey, the snowshoe hare, in deep, powdery snow. Lynx and snowshoe hares are associated with moist, cool, boreal spruce-fir forests. In the northern United States, boreal forests transition to more temperate forest types where lynx populations cannot be sustained. Lynx need persistent deep, powdery snow, which limits competition from other hare predators, as well as denning habitat that consists of log piles, windfalls or dense vegetation to provide security for kittens. Most lynx habitat in the Lower 48 States occur on national forest, national park and BLM lands (USFWS 2013).

According to USFWS ESA distribution mapping, the closest critical habitat for Canada lynx is in Subunit 1 of the Northern Rocky Mountains, located approximately 50 miles northwest of the action area on the border of Boundary (Idaho) and Lincoln (Montana) Counties. The action area is below 4,000 feet and does not contain the preferred boreal spruce-fir forest habitat for Canada lynx. Due to a lack of presence and a lack of habitat disturbance, the Canada lynx would not be affected by the Project.

Grizzly Bear

Grizzly bear prefer habitat in remote areas above 3,500 feet with ample food supplies and forest cover. They are successful omnivores, and in some areas, may be almost entirely herbivorous. Grizzly bears feed on animal matter or vegetable matter that is highly digestible and high in starch, sugars, protein and stored fat.

Upon emerging from hibernation in spring, grizzly bears move to lower elevations to feed on emergent vegetation such grasses, sedges, and forbs. Open south-facing slopes, wet meadows, avalanche chutes, and riparian systems are the most frequently used habitat components. Throughout late spring and early summer, they seek plants at higher elevations, and in late summer and fall they transition to fruits, nuts and herbaceous materials. They are also opportunistic feeders and will prey or scavenge on any available food including ground squirrels, ungulates, carrion, and garbage (USFWS 1982).

The Grizzly Bear Recovery Plan (USFWS 1982) identified key regions and populations in the lower 48 states called “recovery zones.” The closest recovery zones to the Project are the Selkirk Ecosystem, located in northern Bonner County and Boundary County, Idaho; and the Cabinet-Yaak Ecosystem, located in eastern Bonner County and Boundary County, Idaho and northwestern Montana. Both of these recovery zones are over 30 miles away from the Project, and the action area is not located in a grizzly bear recovery zone and does not contain suitable habitat. The Project would not disturb remote forested areas, therefore, grizzly bears would not be affected by the Project.

North American Wolverine

In North America, wolverines occur within a wide variety of habitats, primarily boreal forests, tundra and western mountains throughout Alaska and Canada; however, the southern portion of their range extends into the contiguous United States. Wolverines are opportunistic feeders and primarily scavenge carrion, but also prey on small animals and birds, and eat fruits, berries, and insects. Persistent, stable snow greater than 5 feet deep is required for natal denning (USFWS 2014).

Preliminary Draft for Agency Review

Within Idaho, they occur throughout the state in mountainous areas and are year-round residents. In 2010 through 2014, IDFG conducted a winter bait station survey throughout the state, one being near the northwest range of the Project action area. Wolverines were detected, however, at bait stations in Boundary County, over forty miles from the Project. Appropriate habitat in Bonner County is limited to higher elevations of the Selkirk and Cabinet Mountain Ranges and does not occur in the action area. The Project would not impact tundra or alpine forest habitats and wolverine are not expected within the action area, therefore, North American Wolverine would not be affected by the Project.

Selkirk Mountains Woodland Caribou

The southern Selkirk Mountains woodland caribou requires large contiguous areas of high-elevation, coniferous-forest summer and winter habitat, with little or no vehicle access and disturbance. They prefer old-growth forests in all seasons, and their winter diet is composed almost entirely of arboreal hair lichens that are most commonly found in high-elevation old-growth forests. In spring, the caribou move to lower elevations where snow has melted to forage on new green vegetation, and in summer move back to mid-and upper-elevation spruce/alpine fir forests to selectively forage on grasses, flowering plans, horsetails, willows, dwarf birch leaves and tips, sedges, lichen and huckleberry leaves. In the fall their diet consists of dried grasses, sedges, willow and dwarf birch tips and arboreal lichens (USFWS 2012).

The southern Selkirk Mountains subpopulation of woodland caribou occupies high-elevation habitat in northern Idaho, northeastern Washington, and southern British Columbia. Most recently this subpopulation declined from 46 to 12 caribou between 2009 and 2016. The nearest occurrence of woodland caribou is in the Selkirk Mountains, approximately 70 miles northwest of the Project. The Project action area does not contain suitable habitat for woodland caribou (mature or old-growth conifer forests and undeveloped land) and is not within woodland caribou designated critical habitat. Due to a lack of occurrence and a lack of habitat impacts, woodland caribou would not be affected by the Project.

Because these terrestrial species do not have the potential to occur in the action area, have no known occurrence in the action area, and they have no designated critical habitat in the action area the project would have **No Effect on Canada lynx, grizzly bear, Selkirk mountain North American wolverine (should it be listed prior to completion)** and **Selkirk Mountains woodland caribou**; therefore, they are not further addressed in this Biological Assessment.

Preliminary Draft for Agency Review

Columbia River DPS Bull Trout

Status and Presence in the Action Area

The coterminous United States population of bull trout (*Salvelinus confluentus*) was listed by the USFWS as threatened in November 1999 (64 Federal Register [FR] 58910). Bull trout were listed due to declining trends in distribution and abundance caused by the combined effects of habitat degradation and fragmentation, blockage of migratory corridors, poor water quality, angler harvest and poaching, entrainment into diversion channels and dams, and introduced non-native fish species (USFWS 2015b).

Bull trout are members of the family *Salmonidae* and are char native to Washington, Oregon, Idaho, Nevada, Montana and western Canada. Compared to other salmonids, bull trout have the most specific habitat requirements that appear to influence their distribution and abundance. These requirements are referred to as "the four Cs" – cold, clean, complex and connected habitat – including cold water temperatures (less than 12 degrees Celsius [°C]/54 degrees Fahrenheit); stable stream channels and clean spawning and rearing (SR) gravel; complex stream habitat including deep pools, overhanging banks and large woody debris (LWD); and connectivity (i.e., unblocked migratory corridors) between SR areas and downstream foraging, migration, and overwintering (FMO) habitats (USFWS 2015a).

Bull trout exhibit two life-history forms: resident and migratory. Resident bull trout spend their entire lives in the same stream/creek. Most bull trout are migratory, rearing 1 to 4 years in natal tributaries before moving to larger rivers (fluvial) or lakes (adfluvial) and then migrating back to natal tributaries to spawn from August through November. An anadromous form of bull trout also exists in the Coastal-Puget Sound population, which spawns in rivers and streams but rears young in the ocean. Resident and juvenile bull trout prey on invertebrates and small fish. Adult migratory bull trout primarily eat fish. Resident bull trout range up to 10 inches long, and migratory forms may range up to 35 inches long and weigh up to 32 pounds (USFWS n.d.).

Bull trout normally reach sexual maturity in 4 to 7 years and live as long as 12 years. They spawn more than once in a lifetime, with both repeat- and alternate-year spawning reported. Therefore, bull trout require two-way passage upstream and downstream for repeat spawning and also for foraging (USFWS 2015b). In Idaho, bull trout generally spawn in September and October. Fry normally emerge from early April through May depending upon water temperatures and increasing stream flows (Miller et al. 2014). Most downstream migrations for all size classes of bull trout throughout the year are almost exclusively at night, after sunset and before sunrise (USFWS 2015) and within the first hours of darkness (Downs et al. 2006).

Local Population – Threats, Status, and Recovery Activities

Lake trout suppression programs, including the LPO Trap and Gill Net Program, and the LPO Angler Incentive Program are current, ongoing, and have been in place since 2006. These trout suppression programs and bull trout bycatch affect the environmental baseline. Adfluvial bull trout comprise the predominant life history form present in the LPO basin and are the predominant large-bodied native predator in the lake (McCubbins 2016).

Bull trout rear 1 to 4 years in natal tributaries, and do not return to spawn in their natal tributaries until they are sexually mature. Therefore, subadult bull trout are present in LPO and use the action area year-round as FMO habitat (USFWS 2018), while adult bull trout migrate bull trout most likely use the action area in the course of migrating to and from SR tributaries and as FMO habitat (USFWS 2015b). Adult bull trout begin migrating out of LPO to SR tributaries in April

Preliminary Draft for Agency Review

(USFWS 2015b) and May (Downs et al. 2006), where they remain until spawning. Post-spawn adult bull trout migrate back to LPO in September and October to overwinter (Downs et al. 2006).

Both the IDFG and the USFWS have confirmed that there is no documented presence of bull trout in Sand Creek, and there is minimal data on bull trout use of LPO within the Project action area (IDFG 2017b; USFWS 2017b). Subadult bull trout emigrate into LPO from upstream tributaries in two pulses, one in spring associated with snowmelt runoff and increasing water temperatures and a second in fall as stream temperatures drop and fall rains begin (Downs et al. 2006). A fall-only subadult bull trout emigration occurs from the downstream East River to the Pend Oreille River to LPO, presumably to allow bull trout to avoid swimming upstream into the lake against the current during spring high flows (USFWS 2015b).

LPO and Sand Creek within the Project action area are listed for water quality impairments that have been addressed by established loading targets (total maximum daily loads; TMDLs). These include Sand Creek TMDLs for temperature and sediment approved by USEPA in 2007, and a LPO nearshore TMDL for total phosphorus approved by USEPA in 2002. LPO and Sand Creek within the Project action area are also currently listed as impaired by mercury; development of a TMDL is a medium priority for 2018. Additionally, the Pend Oreille River (including the outlet arm of LPO within the Project action area) is currently in need of TMDLs (medium priority for 2019) for temperature and dissolved gas supersaturation impairments (IDEQ 2014, 20174).

Specific threats identified in the LPO basin proper and its tributaries, extending from Cabinet Gorge Dam on the Clark Fork River downstream to LPO to Albeni Falls Dam on the Pend Oreille River, entirely in Idaho core area include (USFWS 2009):

- Historic fragmentation of the lower Clark Fork River due to three privately-owned mainstem hydroelectric dams (Cabinet Gorge, Noxon Rapids, and Thompson Falls) that seriously compromised access and productivity of this bull trout habitat for nearly a century;
- Overfishing of bull trout and the presence of voracious non-native species, specifically lake trout (mackinaw) that prey on juvenile bull trout and consume kokanee, a primary food source for bull trout, as identified by the IDFG; and
- One primary habitat threat is legacy impacts from upland/riparian land management that increase sedimentation and cause riparian and instream degradation, loss of LWD, and pool reduction in FMO habitat and in some SR tributaries.

Additionally, altered seasonal water level fluctuations have caused reduced riparian vegetation, eroding beaches and shorelines, and decreasing productivity of littoral habitats.

While the adfluvial nature of bull trout in LPO can make them susceptible to threats from non-native fish invasion and mainstem river migratory barriers, it does allow for greater resiliency due to the highly suitable cold water habitat that the lake provides, and the robust size, condition and fecundity of adfluvial fish that are able to capitalize on the lake's high-quality forage base. This may explain why the bull trout population is relatively robust in LPO (approximately 12,000 fish) despite loss of connectivity to large areas of upstream and downstream SR habitat (USFWS 2015a). A 2007–2008 study also noted that an estimated population of 12,513 bull trout in LPO was similar to that estimated one decade earlier in 1997–1998, indicating a stable population (McCubbins et al. 2016).

Also, it is suggested that a minimum of 10 local populations are required for a bull trout core area (metapopulation) to function effectively, and core areas with more than 10 interconnected

Preliminary Draft for Agency Review

local populations are at diminished risk of extirpation. It is also estimated that approximately 1,000 spawning adults within any bull trout population are necessary to ensure persistence of the population by maintaining genetic variation. The LPO core area has at least 20 local populations, and the IDFG has determined that approximately 4,000 adult spawning bull trout occupy LPO at any given time (USFWS 2015b).

Further, bull trout redd counts show a stable to increasing trend in the LPO-B core area. Bull trout redd counts are conducted on a 5-year rotational basis on LPO and lower Clark Fork River tributaries under Appendix A of the Idaho Tributary Habitat Acquisition and Fishery Enhancement Program of the Avista Clark Fork Settlement Agreement (CFSA). These tributaries are designated as critical habitat outside of the Project action area. Six index streams[3] have been counted consistently since 1983 prior to the CFSA. (The CFSA outlines protection, mitigation, and enhancement efforts required under the 2005 relicensing of the Cabinet Gorge and Noxon Rapids Dams on the lower Clark Fork River.)

These bull trout SR tributaries in the LPO-B core area have averaged 738 bull trout redds annually from 1995 to 2014, and 792 bull trout redds from 2005 to 2014. The six index streams represented 68 percent and 62 percent of the total redds during these time periods, respectively (Bouwens and Jakubowski 2016). Habitat conditions in the SR tributaries vary widely among streams and years, ranging from fish passage barriers due to low water in dry years, to variable stream morphology, pool frequency and quality, amount of sedimentation and LWD, road densities, and water temperature.

Ongoing and planned near-term fish passage efforts (fishways and trap and transport programs) have improved the longer-term prognosis for bull trout connectivity, and are expected to provide a critical linkage to recovering bull trout in the entire Lower Clark Fork Geographic Region in the future. Continuing efforts to suppress non-native fish (specifically lake trout), which is largely well-funded under the Avista CFSA, would remain an important component of the recovery effort (USFWS 2009).

A recent study also concluded that lake trout eradication efforts under the Avista CFSA, as well as a moratorium on bull trout angling since 1996, have effectively addressed overfishing and non-native fish threats thereby increasing the likelihood of long-term persistence of the LPO bull trout population (McCubbins et al. 2016).

Recommended recovery tasks to address the primary habitat threats in tributary streams include (USFWS 2015):

- Revegetation of deficient riparian areas; priority watersheds include Pack River and Lightning Creek (located 12 to 20 miles upstream of the Project action area, respectively).
- Continued implementation of the Avista CFSA to protect habitat through acquisitions and easements, and to improve and restore degraded instream habitat in key LPO bull trout SR tributaries.

[3] East Fork Lightning, Gold, Grouse, Johnson, N. Gold, and Trestle Creeks.

Preliminary Draft for Agency Review

Bull Trout Designated Critical Habitat

Status and Presence in the Action Area

In September 2010, the USFWS designated critical habitat for bull trout throughout their range in areas that contain features considered essential for conservation of the species (75 FR 63898). Thirty-two Critical Habitat Units (CHUs) were designated, including Habitat Unit 31-Clark Fork River Basin, which includes the open water and shorelines of LPO and the Pend Oreille River within the Project action area but does not include Sand Creek (**Figure 7**).

The primary function of individual CHUs is to maintain and support core areas. The 32 designated CHUs are clustered into six recovery units. The Columbia Headwaters Recovery Unit (CHRU) includes western Montana, northern Idaho, and the northeastern corner of Washington. The CHRU is further divided into five geographic regions and 35 core areas. Core areas are defined as groups of partially isolated local populations of bull trout with some degree of gene flow occurring between them, and are considered to be "metapopulations" (USFWS 2015b).

Unique to the CHRU is that bull trout life history in most of the core areas is predominantly adfluvial, with adult and subadult fish residing in the lake during much of their life, often with extensive migrations upstream by adults and downstream by juveniles and post-spawn adults (USFWS 2015a). For example, bull trout were tracked migrating at least 82 km (51 miles) to LPO from the East River, a spawning tributary of Priest River (Dupont et al. 2007).

Fifteen of the core areas are referred to as "complex" core areas that represent large, interconnected habitats with multiple spawning streams containing separate and genetically identifiable local populations. These 15 complex core areas contain the majority of individual bull trout and the bulk of the designated critical habitat (USFWS 2015c).

LPO is identified as a complex core area contained within the designated Lower Clark Fork Geographic Region. The Lower Clark Fork Geographic Region, the largest and most diverse bull trout core recovery area in the CHRU, is essential to bull trout conservation because it is among the more secure and stable bull trout refugia across the range of the species and may provide a very important stronghold against potential extinction. It also provides important bull trout FMO habitat for local populations in LPO, Pend Oreille River tributaries, and the Lower Clark Fork River, as well as an essential migratory corridor for bull trout from LPO to access upstream productive watersheds (USFWS 2009).

Because of its systematic and jurisdictional complexity (three states, a tribe, five mainstem dams), the LPO core area is further divided into three parts:

- (LPO-A) Clark Fork River mainstem upstream of Cabinet Gorge Dam on the Idaho/Montana border, almost entirely in Montana;
- (LPO-B) LPO basin proper and its tributaries, extending from Cabinet Gorge Dam on the Clark Fork River downstream to LPO to Albeni Falls Dam on the Pend Oreille River, entirely in Idaho; and
- (LPO-C) the lower basin (lower Pend Oreille River) downstream of Albeni Falls Dam through the Box Canyon Dam to the Boundary Dam one mile upstream of the Canadian border, including portions of Idaho, Washington and the Kalispel Indian Reservation (USFWS 2015c).

Preliminary Draft for Agency Review

Figure 7: Critical Habitat for Bull Trout

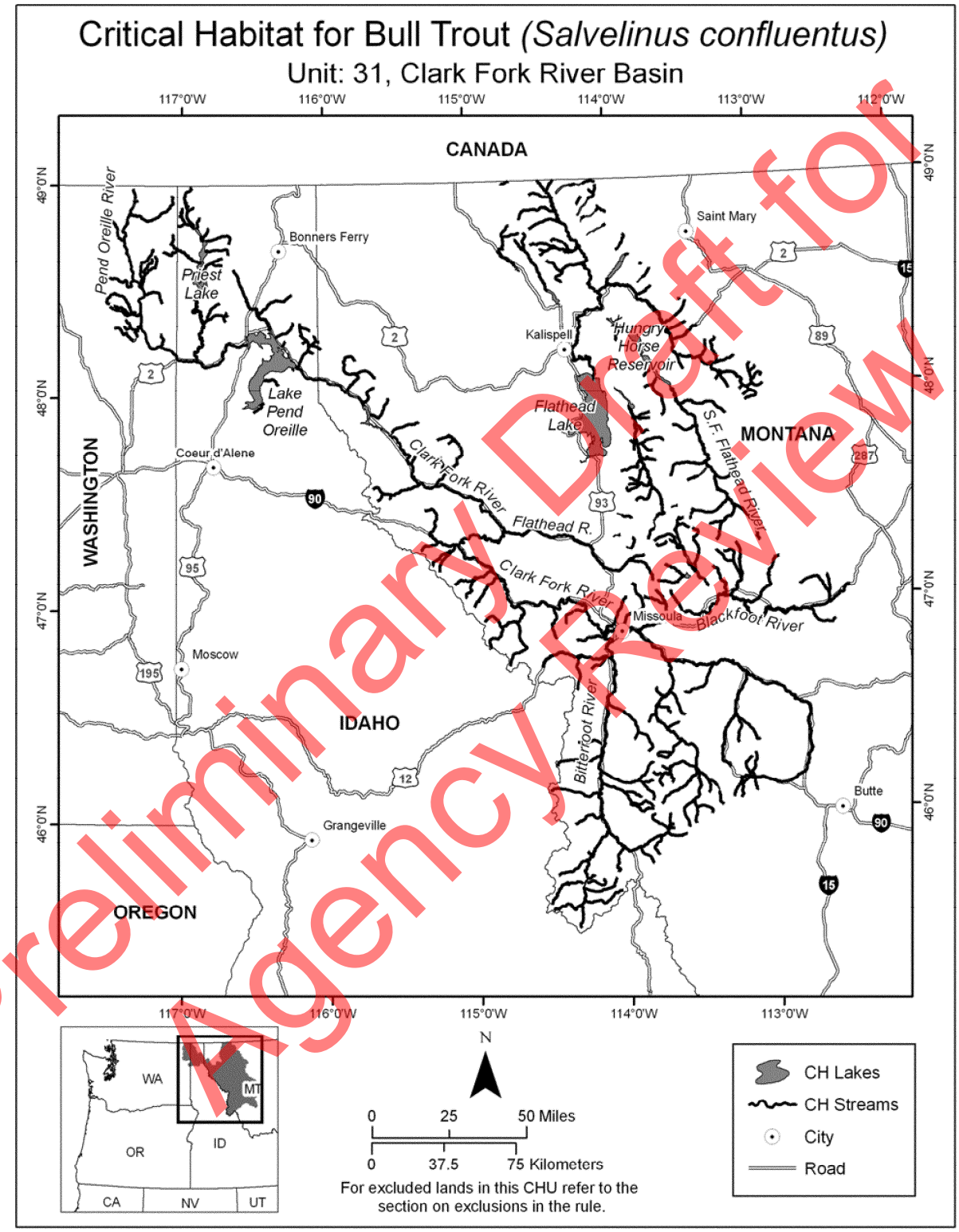

Preliminary Draft for Agency Review

The LPO basin proper and its tributaries (LPO-B) represent 15 percent of the LPO complex core area, covering 0.67 million acres with 1,250 miles of mapped streams. The Project lies wholly within LPO-B.

Primary Constituent Elements

In accordance with section 3(5)(A)(i) of the ESA and regulations at 50 CFR 424.12(b), in determining which areas occupied at the time of listing to propose critical habitat, the USFWS considered the physical or biological features essential to the conservation of the species and that may require special management considerations or protection. These features are the PCEs laid out in the appropriate quantity and spatial arrangement for conservation of the species. These include, but are not limited to: (1) Space for individual and population growth for normal behavior; (2) Food, water, air, light, minerals, or other nutritional or physiological requirements; (3) Cover or shelter; (4) Sites for breeding, reproduction, or rearing (or development) of offspring; and (5) Habitats that are protected from disturbance or are representative of the historical, geographical, and ecological distributions of a species.

The primary constituent elements (PCEs) determined essential to the conservation of bull trout) are listed below. A description of existing baseline conditions in the action area as it relates to each PCE is also discussed.

1. Springs, seeps, groundwater sources, and subsurface water connectivity (hyporheic flows) to contribute to water quality and quantity and provide thermal refugia.

   The Project action area (Sand Creek and LPO) has ample water sources year-round. Water levels are controlled by the Albeni Falls Dam on the Pend Oreille River at the Idaho/Washington border, approximately 25 miles downstream from the Project. Levels fluctuate from an elevation of 2,051 feet at winter pool to 2,062 feet at summer pool.

2. Migratory habitats with minimal physical, biological, or water quality impediments between spawning, rearing, overwintering, and freshwater and marine foraging habitats, including, but not limited to permanent, partial, intermittent or seasonal barriers.

   Shoreline armoring, marinas, and bridges are present within Sand Creek and LPO. Migration between spawning, and rearing habitat in tributaries, and overwintering and foraging habitat in LPO, has been impeded by upstream dams on the lower Clark Fork River (Cabinet Gorge, Noxon Rapids) and by the downstream Albeni Falls Dam on the Pend Oreille River. Water quality in the Project action area is impaired by mercury, and portions of the Project action area are impaired by temperature and total dissolved gas.

3. An abundant food base, including terrestrial organisms of riparian origin, aquatic macroinvertebrates, and forage fish.

   An abundant food base is present in LPO as evidenced by a robust bull trout population. Predation of kokanee, a primary bull trout food source, by non-native fish (lake trout, walleye) is an issue in LPO. An ongoing lake trout suppression effort by IDFG has been underway since 2006. IDFG is also currently researching feasibility of a walleye suppression effort in LPO.

4. Complex river, stream, lake, reservoir, and marine shoreline aquatic environments and processes with features such as large wood, side channels, pools, undercut banks and substrates, to provide a variety of depths, gradients, velocities, and structure.

Preliminary Draft for Agency Review

The Project area includes Sand Creek and LPO. Large wood, pools and undercut banks are not present within the Project area. Though LPO levels are artificially managed, there are a variety of depths and gradients present in the action area.

5. Water temperatures ranging from 2 to 15℃ (36 to 59 degrees Fahrenheit), with adequate thermal refugia available for temperatures at the upper end of this range. Specific temperatures within this range would vary depending on bull trout life history stage and form; geography; elevation; diurnal and seasonal variation; shade, such as that provided by riparian habitat; and local groundwater influence.

   A 2005 temperature monitoring study (Annear et al. 2006) reported temperatures ranging from 2 to 22℃ at depths ranging from 0.16 to 15.24 meters between February and November in LPO near Contest Point (approximately 1.5 miles upstream/east of the existing Bridge 3.9), and reported temperatures ranging from 7 to 25℃ at depths ranging from 0.61 to 7.62 meters between April and November at the US 95 bridge over LPO (approximately 0.5-mile downstream/west of the existing Bridge 3.9). The study also noted that thermal stratification occurs in LPO in the middle of summer (August).

6. Substrates of sufficient amount, size, and composition to ensure success of egg and embryo overwinter survival, fry emergence, and young-of-the-year and juvenile survival. A minimal amount (e.g., less than 12 percent) of fine substrate less than 0.85 millimeter (0.03 inch) in diameter and minimal embeddedness of these fines in larger substrates are characteristic of these conditions.

   Not applicable; the Project is not within bull trout SR habitat.

7. A natural hydrograph, including peak, high, low, and base flows within historic and seasonal ranges or, if flows are controlled, they minimize departures from a natural hydrograph. Existing Conditions: describe conditions in Project area Effects to PCE: describe effects from Project to PCE.

   Sand Creek and LPO have seasonal changes in water levels that can depart from a natural hydrograph. Water levels are controlled by the Albeni Falls Dam on the Pend Oreille River at the Idaho/Washington border, approximately 25 miles downstream of the Project. Levels fluctuate from an elevation of 2,051 feet at winter pool to 2,062 feet at summer pool. Additionally, levels can fluctuate from an elevation of 2,051 feet to 2,056 feet during winter pool.

8. Sufficient water quality and quantity such that normal reproduction, growth, and survival are not inhibited.

   Bull trout rearing and reproduction does not occur within the Project area. Based on the size of the bull trout population LPO, it appears that there is sufficient water quality and quantity for bull trout growth and survival in the Project area. However, LPO and Sand Creek within the Project action area have water quality impairments that have been addressed by established TMDLs, including Sand Creek TMDLs for temperature and sediment (2007), and a LPO nearshore TMDL for total phosphorus (2002).

   LPO and Sand Creek within the Project action area are also currently listed as impaired by mercury; development of a TMDL is a medium priority for 2018. Additionally, the Pend Oreille River (including the outlet arm of LPO within the Project action area) is currently in need of TMDLs (medium priority for 2019) for temperature and dissolved gas supersaturation impairments (IDEQ 2017).

Preliminary Draft for Agency Review

9. Few or no nonnative predatory (e.g., lake trout, walleye, northern pike, smallmouth bass; inbreeding (e.g., brook trout); or competitive (e.g., brown trout) species present.

   Per IDFG 2017 data, predatory species are present within the LPO including walleye, smallmouth bass, northern pike, and lake trout. IDFG is conducting an ongoing lake trout suppression effort that has been underway since 2006 and is also currently researching feasibility of a walleye suppression effort.

Preliminary Draft for Agency Review

Analysis of Effects to Bull Trout

Effects of the Project consider the direct and indirect effects of an action on listed species and critical habitat, together with effects of other activities that are interrelated or interdependent with that action, and then considered along with the environmental baseline and cumulative effects to determine the overall effect to the species. Due to a lack of occurrence, the Project would have no effect on terrestrial ESA-listed species and therefore, they are not addressed in detail in this section.

Direct Effects

Direct effects are those that result from the proposed action and directly or immediately impact the species or its habitat. Indirect effects are those that are caused by, or would result from, the proposed action and occur later in time (USFWS 2015b). Cumulative effects include the effects of future State, tribal, local or private actions that are reasonably certain to occur in the action area. The proposed action may result in direct effects to bull trout from temporary pile driving associated with the construction permanent and temporary bridges.

Elevated Sound Pressure Levels

The Project would construct both a temporary and permanent bridges over Sand Creek and LPO, which would require vibratory and impact pile driving of both 36-inch-diameter steel piles and 24-inch-diameter steel piles. The project includes both vibratory and impact pile driving. High levels of underwater sound can injure or kill fish and cause alterations in behavior (Turnpenny et al. 1994; Turnpenny and Nedwell 1994; Popper 2003; Hastings and Popper 2005; National Marine Fisheries Service [NMFS] 2007). Death from barotrauma can be instantaneous or delayed up to several days after exposure. Even in the absence of mortality, elevated noise levels can cause sublethal injuries. Fish suffering damage to hearing organs may suffer equilibrium problems, and may have a reduced ability to detect predators and prey (Turnpenny et al. 1994; Hastings et al. 1996). Hastings (2007) determined that a sound exposure level (SEL) as low as 183 dB (re: 1 μPa^2-sec) was sufficient to injure the non-auditory tissues of juvenile spot (*Leiostomus xanthurus*) and pinfish (*Lagodon rhomboides*) with an estimated mass of 0.5 grams.

Adverse effects on survival and fitness can occur even in the absence of overt injury. Exposure to elevated noise levels can cause a temporary shift in hearing sensitivity (referred to as a temporary threshold shift), decreasing sensory capability for periods lasting from hours to days (Turnpenny et al. 1994; Hastings et al. 1996). Popper et al. (2005) found temporary threshold shifts in hearing sensitivity after exposure to cumulative SELs as low as 184 dB. Temporary threshold shifts reduce the survival, growth, and reproduction of the affected fish by increasing the risk of predation and reducing foraging or spawning success.

Cumulative SEL is a measure of the risk of injury from exposure to multiple pile strikes. The Equal Energy Hypothesis, described by NMFS (2007), is used as a basis for calculating cumulative SEL. The number of pile strikes is estimated per continuous work period. This approach assumes that there would be a break of at least 12 hours between work periods. NMFS uses the practical spreading model to calculate transmission loss. The NMFS uses an agreed-upon interim criteria to minimize potential impacts to fishes (Fisheries Hydroacoustic Working Group 2008).

Preliminary Draft for Agency Review

The interim criteria include peak SPL and SEL injury threshold limits of:

- Peak SPL: levels at or above 206 dB from a single hammer strike likely results in the onset of physical injury; and
- SEL: cumulative levels at or above 187 dB for fish sizes of 2 grams or greater, or 183 dB for fish smaller than 2 grams.

Bull trout smaller than 2 grams are not present within the LPO since spawning and rearing do not occur within the vicinity of the Project. Pile driving SPLs in excess of 150 dB RMS are expected to cause temporary changes in bull trout behavior such as a startle response, disruption of feeding, or impairment of predator detection. However, since pile driving occurs during daylight hours, there is a break of up to 12 hours overnight. Studies have shown that bull trout display little activity during the day when pile driving would occur, and peak activity is at night (McPhail and Baxter 1996).

Vibratory Pile Driving

All piles would require vibratory pile driving for installation and all temporary piles would be removed slowly with a vibratory pile driver at a rate of 4 piles per day. Vibratory pile driving would occur year round during temporary and permanent bridge installation and temporary bridge removal. Vibratory pile drivers produce SPLs 10 to 20 dB below that of impact pile drivers. However, vibratory pile driving would occur for much longer durations than impact pile driving. Vibratory pile driving is not likely to result in fish injury but is likely to impact behavior by resulting in an avoidance of the project area. Vibratory pile driving would occur off and on year round between May of 2019 and November 2022.

Impact Pile Driving

Piles 36 inches in diameter are the widest pile proposed, and would be installed with vibratory pile-driving equipment and an impact hammer would be used for finishing. Approximately four 36-inch-diameter piles would be driven per day with up to 1,600 strikes per pile. The impact hammer can produce spikes of sound reaching levels than can harm or kill fish or cause behavioral effects. Impact hammers produce more intense pressure waves, and while the initial strikes may elicit a startle response in fish, the response wanes and fish may remain within the range of potentially harmful sound. Additionally, impact hammers produce short spikes of sound lasting less than a few seconds with energy outside of the infrasound range, which may not elicit an avoidance response in fishes. Therefore, fish may be exposed to harmful pressures for longer periods of time (USFWS 2015b).

Impact pile driving associated with 24-inch-diameter piles at both temporary work bridges is anticipated to require a total of 144 hours of impact pile driving with an injury area (cumulative SEL dB to fish ≥ 2 grams) of 97 meters and a disturbance area of 5.3 miles (**Appendix D**). Temporary bridge construction would occur over a year-long period and affect both migration and non-migration periods.

Impact pile driving a 36-inch-diameter piles associated with permanent Bridge 3.9 is anticipated to require 432 hours of pile driving, with two pile drivers going at once, at each end of the bridge. This action would result in an injury area (cumulative SEL dB to fish ≥ 2 grams) of 0.62 miles and a disturbance area of 2.88 miles (**Appendix F**). Permanent bridge construction would occur over a 2-year-long period and affect both migration and non-migration periods.

Preliminary Draft for Agency Review

Impact pile driving of 24-inch-diameter pile associated with Bridge 3.1 is anticipated to require 44 hours of pile driving over a 1- to 5-month period. This action would result in an injury area (cumulative SEL dB to fish ≥ 2 grams) of 0.28 miles and a disturbance area of 2.88 miles (**Appendix F**). Permanent bridge construction may affect both migration and non-migration periods.

Impact pile driving would occur for approximately 620 hours over a two-year period considering two impact pile drivers may be working at either ends of Bridge 3.9. Considering there are 24 hours in a day, and 365 days in a year, this results in impact pile driving 3.5 percent of the time over a two-year span. All pile driving would occur during daylight hours.

For aquatic species, risk of injury or mortality resulting from noise is related to the effects of rapid pressure changes, especially on gas-filled spaces in the fish's body (such as swim bladder, lungs, sinus cavities, etc.). Generally, in-water or near-water pile driving is the issue of concern. Noise generated by impact pile driving is impulsive—consisting of a broad range of frequencies over a short duration. Different aquatic species exhibit different hearing ranges, and threshold distances and noise levels have been established to be used as a basis for effect determinations.

Effects to Bull Trout Life History and Foraging, Migration, and Overwintering

Peak dB describes the instantaneous peak SPL and is used to evaluate potential injury to fish, and RMS dB describes the pressure level during the impulse and is used to describe disturbance-related effects (i.e., harassment) to fish. SEL is used as an indication of the energy dose (WSDOT 2018).

There are several factors that can reduce the extent of underwater noise transmission, including water depth, sediment type, bottom topography, current, underwater structures, sinuosity (in rivers or streams), type and diameter of piles, and use of attenuation devices such as air bubble curtains (WSDOT 2018). Calculated results for Bridge 3.9 show a cumulative SEL of 218 dB and the following distances at which various thresholds of accumulated SEL are expected to be exceeded for bull trout:

- Distance at which 206 dB PEAK is expected to be exceeded (onset of physical injury) = 12 meters (37 feet)
- Distance at which 187 dB accumulated SEL is expected to be exceeded (onset of physical injury to fish 2g or greater) = 1,000 meters (0.62 mile)
- Distance at which 150 dB RMS is expected to be exceeded (behavioral effects) = **4,642 meters (2.88 miles)**

Potential behavioral effects to bull trout could therefore extend northeast to LPO's Kootenai Bay, and southwest nearly to the start of the Pend Oreille River near the City of Dover at the lake's outlet arm (**Figure 8**). Calculated results for Bridge 3.1 show a cumulative SEL of 212 dB and the following distances within which various thresholds of accumulated SEL are projected to be exceeded for bull trout:

- Distance in which 206 dB PEAK is expected to be exceeded (onset of physical injury) = 7 meters (23 feet)
- Distance within which 187 dB accumulated SEL is expected to be exceeded (onset of physical injury to fish 2g or greater) = 451 meters (0.28 mile)
- Distance within which 150 dB RMS is expected to be exceeded (behavioral effects) = **5,412 meters (3.36 miles)**

Preliminary Draft for Agency Review

For Bridge 3.9, the NOAA Pile Driving Calculator (**Appendix D**) shows that injury to subadult and adult bull trout could occur within approximately 0.62 miles of the pile driving, and behavioral effects could occur within approximately 2.88 miles. For Bridge 3.1, the calculator shows that injury to subadult and adult bull trout could extend approximately 0.28 miles from the bridge into LPO, and behavioral effects could extend over a mile southeast across LPO to the lake shoreline near Contest Point and overlap the behavioral effects range of Bridge 3.9.

Bull trout typically remain in colder and deeper waters during daylight hours. The action area contains the shallowest portion of LPO, with depths of only 10 to 25 feet in the vicinity of the bridges. Much deeper water is located outside the action area in other parts of LPO. Due to increased activity occurring in the immediate area of Project construction and the use of dispersion strikes, bull trout could be expected to move away from the area at, or prior to, initiation of impact pile driving. Also, there would be a break of up to 12 hours or more (overnight) between work periods, which is believed to be sufficient time for recovery from exposure to high noise levels (USFWS 2015b). Additionally, Project actions are proposed in the shallowest, and likely the warmest portion, of the lake; therefore, species presence is anticipated to be fewer relative to other areas of the Lake. Further, bull trout are known to be most active at night and thus less likely to be in the action area when pile driving occurs. Lastly, air bubble curtains would be used to attenuate sound impacts when installing permanent bridge piles to reduce SPLs by 3dB thereby somewhat reducing the lateral extent of effects.

Sedimentation/Turbidity

Activities included in the proposed action may result in suspended sediment above background levels as a result of excavation or fill placement below or adjacent to the OHWM/MHHW, runoff from areas with disturbed riparian vegetation, placement of rip-rap, and pile driving and removal. BNSF would employ BMPs and minimization measures to minimize the production of suspended sediment.

Increases in turbidity from the proposed action would largely be temporary and localized in nature. Sediment from disturbed riparian areas would occur only until the sites are stabilized or new vegetation grows. Placement of nearshore fill is proposed during low/no water conditions to reduce sedimentation and turbidity impacts. However, when water levels increase during the high water season, loose sediments from newly placed nearshore fills can temporarily increase turbidity in a localized area. Sediments resuspended from pile driving would continue for only a short period after driving is completed, and would occur only in a small area surrounding the pile being driven or removed. When possible turbidity curtains would be utilized.

Salmonids typically avoid areas with higher suspended sediment, which can mean that they displace themselves from their preferred habitats in order to seek areas with less suspended sediment. Fish unable to avoid suspended sediment can experience adverse effects. The severity of effect of suspended sediment increases as a function of the sediment concentration and exposure time (Newcombe and Jensen 1996; Bash et al. 2001). Suspended sediments can cause sublethal effects such as elevated blood sugars and cough rates (Servizi and Martens 1991), physiological stress, and reduced growth rates.

Elevated turbidity levels can reduce the ability of salmonids to detect prey, cause gill damage (Sigler et al. 1984; Lloyd et al. 1987; Bash et al. 2001), and cause juvenile steelhead to leave rearing areas (Sigler et al. 1984). Additionally, short-term pulses of suspended sediment influence territorial, gill-flaring, and feeding behavior of salmon under laboratory conditions (Berg and Northcote 1985). Adult and larger juvenile salmonids appear to be little affected by

Preliminary Draft for Agency Review

Figure 8: Bull Trout Threshold Distances

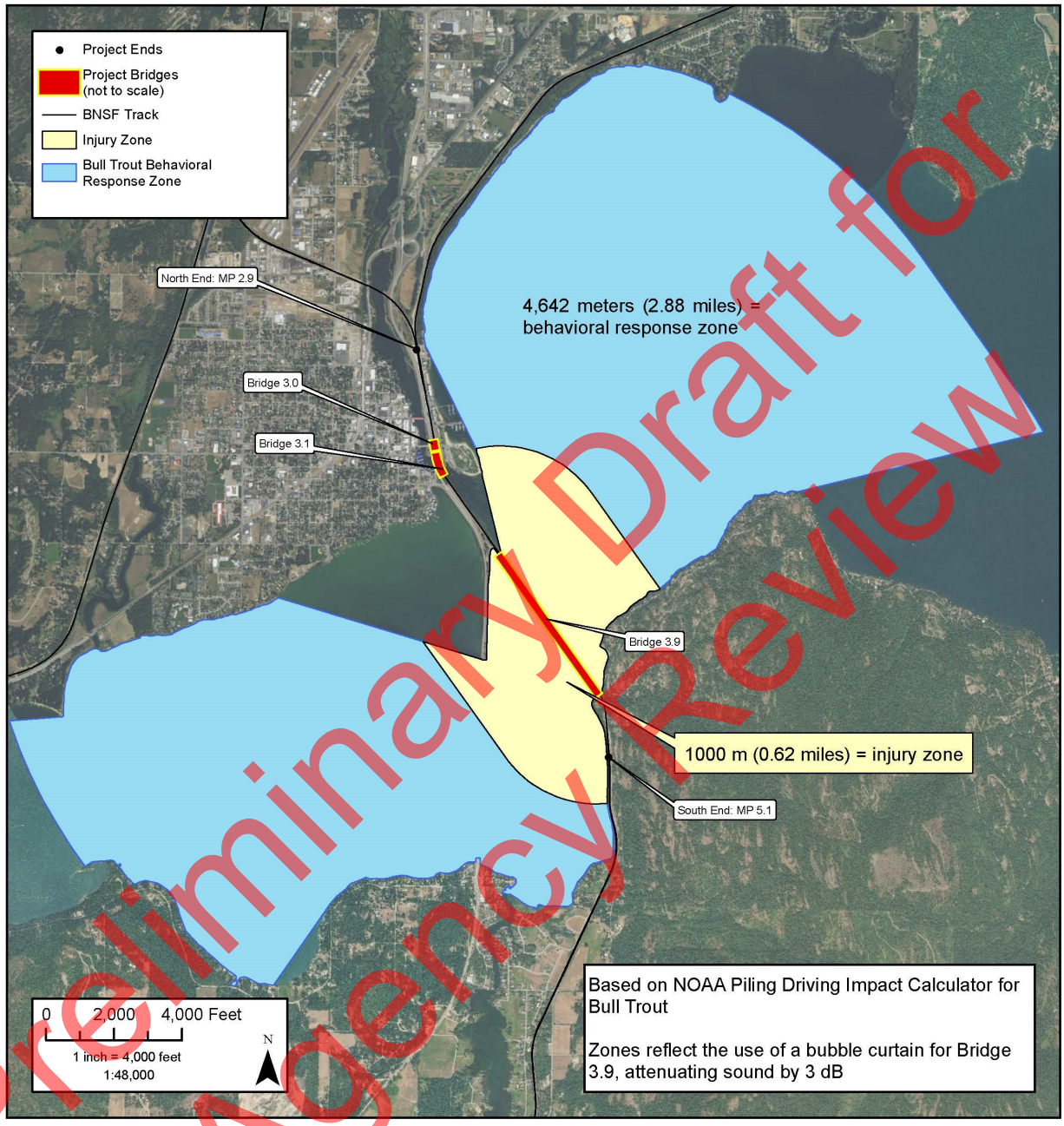

Preliminary Draft for Agency Review

the high concentrations of suspended sediments that occur during storm and snowmelt runoff episodes (Bjornn and Reiser 1991). However, research indicates that chronic exposure can cause physiological stress responses that can increase maintenance energy and reduce feeding and growth (Lloyd et al. 1987; Servizi and Martens 1991).

While pile driving itself typically generates localized sediment displacement, the use of air bubble curtains can mobilize a higher level of sediment and increase localized areas of turbidity within the action area temporarily. Removal of piles for the temporary work bridges also could result in localized turbidity increases. The level of turbidity within several meters of construction is likely to exceed natural background levels. Turbidity can cause stress responses in bull trout, such as gill flaring, coughing, avoidance, and an increase in blood sugar levels. However, moderate levels of turbidity can also reduce vulnerability to predators due to a camouflaging effect (USFWS 2015b).

Turbidity impacts would be reduced by utilizing turbidity curtains during impact driving of the piles for the new, permanent Bridges 3.1 and 3.9 while bubble curtains are in use, and where appropriate when bubble curtains are not being used. They would also be used when removing piles for the temporary work bridge over LPO, and where possible for the temporary work bridge over Sand Creek. Turbidity curtains are expected to limit the extent and magnitude of sediment transport. Additionally, the potential of bull trout remaining in the construction area would be low due to the activity and noise avoidance. Therefore, turbidity is not expected to result in significant effects to bull trout.

Contaminant Mobilization

Potential contaminants in lakebed sediments could include mercury (LPO and Sand Creek are listed as mercury-impaired), and arsenic, cadmium, copper, lead, and zinc primarily from legacy discharges from mining and smelting in the headwaters of Montana's Clark Fork River. The Clark Fork River contributes approximately 92 percent of the annual inflow to the lake and most of the annual suspended sediment load, however these contaminants are not considered to be a limiting factor to bull trout populations.

Concentrations of Clark Fork River bed-sediment metals decrease exponentially with distance downstream away from mining (Axtmann 1990). No sediment studies were conducted in the Project vicinity; however, a study done for the Clark Fork Delta restoration project (approximately 16 miles upstream of the Project) detected metal concentrations (cadmium, copper, mercury and zinc) exceeding the USEPA's SEF Interim Freshwater SL1 Concentrations in 13 of 103 samples collected at 10 of 33 sampling locations; 8 of the 13 contaminated samples were at depths between 1.5 and 2.5 feet (**Appendix G**; GeoEngineers 2014).

Construction of permanent and temporary work bridges creates the potential risk of construction materials or construction equipment fluids (fuel, oil, hydraulic fluid, antifreeze, etc.) entering open waters. Exposure to high levels of petroleum-based products can cause toxicity to bull trout and chronic lethal and sublethal effects to a wide range of aquatic organisms. Spills of wet concrete into water can potentially result in temporary localized increases in pH levels. The risk to aquatic life depends on the type of contaminant, the time of year, the amount of material spilled or leaked, and the effectiveness of containment materials (USFWS 2015b).

Implementation of BMPs/minimization measures such as containment systems installed under the construction and permanent bridges to capture potential falling construction materials or debris, spill prevention planning and staging, proper storage and handling of fluids, and equipment monitoring and maintenance, are all proposed to be implemented to reduce potential impacts to water quality and bull trout.

Preliminary Draft for Agency Review

As discussed under Sedimentation/Turbidity above, pile removal has the ability to increase turbidity. If contaminated sediments are present within the pile driving area, there is a potential for resuspension of these particles. The use of turbidity curtains is proposed and would help contain suspended sediments to a localized area. If a fish is within the vicinity of pile removal activities during sediment resuspension, there is a potential for exposure.

Depending on the type of metal and its concentration when remobilized in the water column, potential effects to bull trout can range from coughing and neurotoxicity to adverse growth and behavior impacts. Potential effects to bull trout critical habitat include effects to water quality and an adequate prey base, since metals bioaccumulate in adult piscivorous fish such as bull trout. However, these effects are primarily associated with chronic exposure and/or very high levels of acute exposure (USFWS 2015d).

BMPs that would be utilized to contain and control potential remobilization of contaminated sediments during pile removal include slowly vibrating the piles out of the lakebed and using turbidity curtains around each pile or bent being removed; curtains would be anchored to the lakebed for total water column seal and tied off to withstand maximum current conditions. Should turbidity occur, it would be of short duration and contained within the turbidity curtain until sediments have settled.

Nearshore Fill Placement

The Project action would consist of a filling 0.88 acre of permanent nearshore area and 0.38 acre of temporary nearshore area below the jurisdictional ordinary high water mark elevation of 2,062.5 feet, associated with bridge abutments and the south switch. Fills result in both temporary and permanent habitat loss.

The LPO water level is slowly brought up about 5 feet in the month of April through a release from the upstream dam, 4 feet in the month of May and, 2 to 2.5 feet by mid-June. Sometimes USACE engages their “flexible winter operations” which could fluctuate the lake level 1-5 feet multiple times during the winter (Jacobs 2018c). When water levels increase during the high water season, loose sediments from newly placed nearshore fills can temporarily increase turbidity in a localized area.

Riparian Vegetation Removal

Shoreline development at both ends of Bridge 3.9 has reduced shoreline vegetation and LWD recruitment, displaced willow habitat, and altered wave and scour patterns adjacent to new shoreline structures. Removal of riparian vegetation can increase water temperature and reduce the supply of terrestrial insects. Removal of riparian trees also reduces the potential for LWD recruitment that contributes to production of invertebrate prey for bull trout (USFWS 2015b). Removal of existing shoreline vegetation would be limited to the minimum necessary for construction of the Project.

During construction and prior to post-construction revegetation, there would temporarily be a loss of vegetation within the project construction and staging areas. Overall water temperature and LWD recruitment in LPO would not be affected, and removal of localized existing vegetation would be insignificant relative to the total amount of shoreline and riparian vegetation currently remaining in LPO and the Project area.

Preliminary Draft for Agency Review

Indirect Effects

Indirect effects are those impacts that are caused by the action and occur later in time (after the action is completed) but are still reasonably certain to occur. There may be permanent indirect effects to bull trout due to the potential for increased predation associated with the increased shading and additional pier hiding habitat from Bridge 3.9 after construction. Non-pollution generating stormwater would flow through the bridge as it does on the existing bridge. Water captured in the deck tubs would run off through scuppers or along the bents. The water would remain within the same subbasin and therefore would not result in a hydrologic affect.

Long-Term Habitat Loss or Alteration

LPO provides FMO habitat for bull trout. The Project would construct a new railroad bridge over LPO that would require driving 288 permanent 36-inch-diameter steel piles and up to 700 temporary 24-inch-diameter piles into the lakebed. This would result in a permanent loss of 2,036 square feet of benthic habitat, and a temporary loss of 2,200 square feet of benthic habitat (the area where the piles are installed). The Project action would also consist of a filling 0.88 acre of permanent nearshore area and 0.38 acre of temporary nearshore area below the jurisdictional ordinary high water mark elevation of 2,062.5 feet, associated with bridge abutments and the south switch. Given the footprint of the Project where permanent benthic habitat would be lost relative to the total benthic habitat available in LPO, the effects to benthic habitat are expected to be discountable.

Predator/Prey Relationships

Bridge 3.9 over LPO would result in additional shading (low level) and additional pier hiding habitat (moderate). Both have the potential to create rearing and ambush habitat for native and non-native fish species that prey on subadult bull trout. Smallmouth bass and largemouth bass are two predator fish in the action area that have a strong affinity to habitat structures including bridges and pilings (USFWS 2015b).

Based on the presence of bull trout and predators in the action area, and the additional shading and structure created by the new Bridge 3.9, there is a potential for increased predation of subadult bull trout. Bull trout in the action area are migratory and use the area for foraging and overwintering. However, only subadult bull trout are susceptible to increased predation. While the number of subadult bull trout in the action area potentially lost to predation cannot be quantified, the overall robust LPO bull trout population is not expected to be adversely affected.

Bridge Shading

The area shaded by the permanent Bridge 3.9 over LPO is very small compared to the total surface area of the lake (approximately two acres out of a total of 94,720 acres LPO surface area). Similarly, the LPO temporary work bridge is also very small compared to the surface area of the lake (approximately four acres out of a total of 94,720 acres LPO surface area). Additionally, both bridges were designed at elevations that minimize shading impacts. Fish of all species would need to navigate around pile and may have slight behavioral changes due to new structures and a change in shading patterns. However, overall, the bridge shading is not anticipated to substantially affect movement, migration or predation.

Preliminary Draft for Agency Review

Effects to Bull Trout Designated Critical Habitat

The nine bull trout PCEs and a baseline of the existing PCE conditions within the project area are discussed under the Effects to Bull Trout Designated Critical Habitat section. This section provides an analysis of the Project's effects on each individual PCE herein.

The Project would not impact water levels or subsurface water connectivity as no actions are proposed that would substantially reduce water levels or interrupt water connectivity. Placement of temporary and permanent nearshore fills would result in insignificant impacts to PCE 1.

While the new, permanent Bridge 3.9 over LPO would have new in-water piers, these would not be partial or complete fish barriers to bull trout migration in the Project action area. There would be fewer piers supporting the new Bridge 3.9 compared to the existing bridge, and the new bridge piers would align approximately with every other pier of the existing bridge. Spacing between piers for the new bridge ranges from approximately 65 feet to 93 feet. However, pile driving during bull trout migratory periods in the spring and fall may affect bull trout migration in LPO. While most bull trout migrations are nocturnal and occur within the first few hours of darkness, there may be isolated instances of bull trout attempting to migrate during daylight transition times (early morning/early evening hours) when construction work could be starting or ending. Sound pressure impacts above behavior disturbance are unavoidable. Since the project would impact behavior within a migratory zone for an extended duration of 620 hours over a 2-year period; the project would have adverse impacts to PCE 2.

The Project would not contribute to current temperature or dissolved gas water quality impairments in the action area. Existing temperature and dissolved gas impairments are in the Pend Oreille River, approximately 2.7 miles west/downstream of Bridge 3.9. Removal of temporary piles for Bridges 3.1 and 3.9 work bridges may result in short-term, spatially-limited sedimentation/turbidity in Sand Creek and LPO, and could also remobilize contaminated sediments if present. Sand Creek and LPO are both listed as impaired by mercury, which may be present in bottom sediments. Turbidity curtains would be used during in-water pile removal, which would limit the extent and duration of sedimentation and potential remobilization of contaminants; therefore, the project would result in insignificant water quality impacts associated with PCE 2.

The Project may impact predator/prey relationships at the Bridge 3.9 permanent bridge and temporary work bridge due to the presence of more underwater structures that provide ambush habitat for native and non-native fish species that prey on sub-adult bull trout. Temporary turbidity during construction, and/or placement of nearshore fills, could impact access to macroinvertebrates in a localized area. Limited vegetation removal would not substantially change the availability of riparian organisms due to the existing low-quality nearshore habitat in the Project area; therefore, the project would have insignificant impacts on PCE 3.

The Project would not change substrates or the presence of side channels. The Project would not change the depths, velocities or channels of Sand Creek or LPO. Sand Creek gradient would not be modified. The placement of pile within Sand Creek and piles and fill within LPO would result in insignificant impacts to PCE 4. The Project would not change water temperatures or the amount of thermal refugia currently available in LPO.

The new Bridge 3.9 and the temporary work bridge were designed to match the elevation of the existing and are at sufficient elevations to allow penetration of sunlight during most of the day and would not be expected to affect existing surface water temperatures. LPO stratifies in the summer and bull trout would be expected to occupy the deeper, colder waters below the

Preliminary Draft for Agency Review

thermocline during the daytime. Therefore, there would be no expected change in the amount of available thermal refugia in the action area. Additionally, a relatively small amount of riparian vegetation would need to be removed in areas needed for construction of bridge abutments and at the south switch. The limited amount of riparian vegetation removal would not substantially impact water temperatures and, therefore, would have an insignificant impact to PCE 5.

There would be no effect on PCE 6 since spawning and rearing habitat do not occur within the project vicinity or action area. The Project would have no or insignificant impacts to PCE 7 as placement of temporary and permanent nearshore fills would result in insignificant impacts to the natural or controlled hydrograph. The Project would not impact water quantity as there is no change in water inputs. The Project may impact water quality associated with PCE 8, due to sedimentation during nearshore fill placements and temporary fill removals, and during bridge pile installations and temporary work bridge pile removals. Pile removal in LPO could also potentially remobilize contaminated sediments. The areas of temporary increases in suspended sediments are insignificant when compared to the size of LPO and the available critical habitat.

The Project would not introduce new predatory, inbreeding or competitive species. However, Bridge 3.9 new permanent and temporary work bridges may provide additional ambush habitat for native and non-native fish species that prey on subadult bull trout. New underwater pier structures for the new bridge in LPO may alter predator/prey relationships due to the presence of more structures that provide ambush habitat for native and non-native fish species that prey on sub-adult bull trout. These altered relationships would occur year-round since sub-adult bull trout are present in the lake year-round and do not migrate to/from SR tributaries until they are sexually mature. The new predator habitat would be relatively small compared to the size of the lake; the Project's effect on PCE 9 would be insignificant.

The Exposure Table in **Appendix H** displays Project effects on population and habitat indicators.

Interrelated and Interdependent Actions and Activities

Per 50 CFR 402.33(a)(2)(iii), interrelated or interdependent actions should be assessed and considered when providing a determination. Interrelated or interdependent actions associated with the project include staging areas which require temporary nearshore fills and temporary clearing and grading which require removal of riparian vegetation. These actions and impacts are fully reviewed in the Direct and Indirect Analysis of Effect sections.

Preliminary Draft for Agency Review

Cumulative Effects

Cumulative effects are those effects of future state or private activities, not involving Federal activities, that are reasonably certain to occur within the action area of the Federal action subject to consultation (50 CFR 402.02). Future Federal actions that are unrelated to the proposed action are not considered in this section because they require separate consultation pursuant to Section 7 of the ESA.

Though the information and activities presented below do not directly occur within the Project action area, they are provided to assist USFWS with preparation of the Biological Opinion and to help in tracking the environmental conditions throughout a general area. These actions are assumed to continue at this level of effort for the foreseeable future.

Non-Native Fish Suppression

Lake Trout

Appendix F5 of the Avista CFSA has provided funding to IDFG for suppression of lake trout via the LPO Trap and Gill Net Program and the LPO Angler Incentive Program since 2006. The goal of these programs is to reduce predator abundance and increase kokanee numbers, and these programs have removed more than 216,000 lake trout from 2006 through 2017 (Avista 2017).

Annual CFSA Implementation Reports to the Federal Energy Regulatory Commission (FERC) document the number of lake trout removed from LPO and the resulting response in bull trout and kokanee abundance for both programs, well as the amount of bull trout take and mortalities associated with the Trap and Gill Net Program. Information from the two most recent years is noted below (Avista 2016, 2017).

2016

Angler Incentive Program

- Lake trout removed – 2,871

Trap and Gill Net Program

- Lake trout removed - 7,185
- Bull trout take – 1,612
- Bull trout mortalities – 549

Bull Trout/Kokanee Response

- Kokanee abundance estimates remained high for the fourth consecutive year.
- Total kokanee abundance for all age classes was 64 percent higher than in 2012 and over 2.5 times higher than the low point of abundance in 2008.
- Trap net catch rates for bull trout abundance estimates have almost doubled since 2007

Preliminary Draft for Agency Review

2017

Angler Incentive Program

- Lake trout removed – 3,531

Trap and Gill Net Program

- Lake trout removed - 7,216
- Bull trout take – 1,418
- Bull trout mortalities – 442

Bull Trout/Kokanee Response

- Kokanee abundance estimates remained high for the fifth consecutive year.
- Total kokanee abundance remains over 2.5 times higher than the low point of abundance in 2008 and is at the highest levels since the programs began in 2006.
- Trap net catch rates for bull trout abundance estimates have more than doubled since 2007 and were only slightly less than the record high rates of 2016.

Walleye

- Avista is also providing research CFSA funding to IDFG for a walleye suppression feasibility study. In 2017, walleye were tagged and released, and the first year of a three-year removal plan began in 2018. Information from this effort is noted below. Fished Pack River delta, Clark Fork River delta, and LPO north shore between Bridge 3.9 and US 95 long bridge.
- Fished only one day between Bridge 3.9 and the US 95 long bridge due to lake currents on April 23, 2018.
- No bull trout caught at bridges; caught 148 walleye.
- Clark Fork River delta (4/25-4/26) – 15 bull trout caught, 8 mortalities; caught 81 walleye.
- Pack River delta (4/24) – 12 bull trout caught, 3 mortalities; caught 163 walleye.
- Totals (including earlier 4/16-4/20 effort): 31 bull trout caught; 14 mortalities.

Fish Passage Projects

- USACE Albeni Falls Dam Fish Passage Project (Pend Oreille River):
  - Would allow bull trout that currently migrate downstream of Albeni Falls Dam to get back upstream to access LPO FMO habitat.
  - Would increase number of bull trout migrating from the Pend Oreille River to LPO and restore connectivity in the LPO bull trout core recovery area.
  - Earliest construction anticipated in 2022.

Preliminary Draft for Agency Review

- Pend Oreille County Public Utility District Box Canyon Fish Passage Project (Pend Oreille River):
  - Would facilitate upstream passage of fish greater than 4 inches (Albeni Falls is the next upstream dam).
  - Ongoing construction to be complete in July 2018.
- Avista Cabinet Gorge Dam Fish Passage Facility (Clark Fork River):
  - Would construct a new facility to transport native migratory salmonids, with a focus on upstream transport of bull trout to tributaries in Montana to restore connectivity in the LPO bull trout core recovery area.
  - Construction to begin in fall 2018.
  - Current trap and haul passage of bull trout at Cabinet Gorge Dam passed 903 bull trout (4 mortalities) in 2016–2017.

The projects noted above are anticipated to benefit bull trout. At this time, there are no other known state, tribal or private actions that are certain to occur in the action area, other than additional private docks may be constructed along the LPO and Pend Oreille River shorelines within the action area. These docks are not anticipated to alter any measurable amount of shoreline within the Project action area. Overall, non-associated projects are not anticipated to result in overall negative impacts to bull trout.

Preliminary Draft for Agency Review

Conclusions and Effect Determinations

Bull Trout

Bull trout activity and migration primarily occur at night (after sunset and before sunrise). In addition, bull trout typically utilize the deepest and coldest portions of lake environments. Project construction would occur during daylight within the shallowest portion of LPO. Bull trout impact minimization measures include the use of an air bubble curtain during the pile driving at the new permanent bridges; use of open-ended piles to reduce pile driving durations; the use of turbidity curtains during impact pile driving at the new permanent bridges and during removal of the temporary bridge piles; and turbidity curtains and a containment system would be installed under the construction bridges to capture potential falling construction materials or debris.

The Project **May Affect bull trout** because:

- The action area includes LPO and a portion of the mouth of Sand Creek.
- Bull trout have been documented in LPO and the Pend Oreille River.
- Both adult and subadult bull trout may utilize the action area at any given time, especially during spring and fall migration periods when movement through the area is higher.
- Year-round, in-water work is proposed.
- The Project includes installation of piles with a vibratory driver and impact hammer, which increases baseline underwater SPLs.
- The Project would occur over an approximate 3- to 3.5-year time period.

The Project is **Likely to Adversely Affect bull trout** because:

- Underwater noise levels from pile driving would exceed the injury threshold within 0.62 mile of Project actions.
- Underwater SPLs would exceed the behavioral disturbance threshold within 2.88 miles of Project actions.
- Increased SPLs may delay movements and migration of bull trout for 3 years; due to 2 years of impact and vibratory pile driving, and an additional year of vibratory pile driving.
- The Project would increase sedimentation and turbidity in the immediate vicinity of the pile driving actions.
- The Project has the potential to mobilize contaminants in the immediate vicinity of the pile driving actions.
- The Project may result in increased predation of subadult bull trout due to creation of additional predator ambush habitat at the piers.

Preliminary Draft for Agency Review

Bull Trout – Designated Critical Habitat

There are 9 bull trout PCEs used to determine critical habitat. The regulated PCEs and a baseline of the existing PCE conditions within the Project area are discussed under the Bull Trout Designated Critical Habitat section. A full description of Project affects to each PCE is presented in the Effects to Bull Trout Designated Critical Habitat section.

PCE 1, 3, 4, 5, 7, 8 and 9 are present within the action area and may be affected; however, effects to these PCEs are insignificant or discountable per the reasons below. There would be no effect on PCE 6 since spawning and rearing habitat do not occur within the Project vicinity or action area. The Project is likely to adversely affect PCE 2 (migratory habitats with minimal physical, biological, or water quality impediments between spawning, rearing, overwintering, and freshwater and marine foraging habitats, including, but not limited to permanent, partial, intermittent or seasonal barriers). Therefore, the overall effect determination for bull trout Critical Habitat is Likely to Adversely Affect.

The Project May Affect PCEs 1, 3, 4, 5, 7, 8 and 9 because:

- These PCEs are present in the action area.
- The Project results in minor changes to shading patterns.
- The Project results in temporary increases in turbidity.
- The Project would cause elevated underwater SPLs during migration.
- The Project requires temporary and permanent nearshore fill.

These affects are insignificant or discountable because:

- Bull trout critical habitat in the action area is small compared to the over 94,000 acres of habitat designated in LPO and the Pend Oreille River.
- No bull trout spawning habitat occurs in the action area.
- Bull trout foraging or rearing habitat would not be degraded by the Project.
- Project impacts would not extend to any critical habitat in LPO SR tributaries.
- The contractor would implement BMPs and other minimization and mitigation measures outlined previously, and additional conservation measures or conditions required by the regulatory agencies.

Overall, **the Project is Likely to Adversely Affect bull trout critical habitat** because

- The Project action area is within designated critical habitat for bull trout.
- Elevated SPLs are likely to impact migration behaviors due to avoidance of the project area during 2 years of impact and vibratory pile driving, and an additional year of vibratory pile driving.

Preliminary Draft for Agency Review

Bibliography

Annear, Robert, C. Berger, and S. Wells (Annear et al.). 2006. *Pend Oreille River Model: Model Development and Calibration*. Technical Report EWR-02-06. Department of Civil and Environmental Engineering, Portland State University, Portland, Oregon. Prepared for Idaho Department of Environmental Quality. November.

Avista. 2016. *The Clark Fork Project, FERC Project No. 2058*. 2016 Annual Report.

———. 2017. *The Clark Fork Project, FERC Project No.2058*. 2017 Annual Report.

Axtman, Ellen V. and Samuel Luoma. 1991. Large-scale distribution of metal contamination in the fine-grained sediments of the Clark Fork River, Montana, U.S.A. U.S. Geological Survey, Menlo Park, CA. In Applied Geochemistry, Vol, 6, pp. 75–88, 1991.

Bash, J., C. Berman, and S. Bolton. 2001. "Effects of turbidity and suspended solids on salmonids." Center for Streamside Studies, University of Washington, Seattle, Washington.

Berg, L., and T. G. Northcote. 1985. "Changes in territorial, gill-flaring, and feeding behavior in juvenile coho salmon (Oncorhynchus kisutch) following short-term pulses of suspended sediment." Canadian Journal of Fisheries and Aquatic Sciences 42: 1410–1417

Bjornn, T. C., and D. W. Reiser. 1991. Habitat requirements of salmonids in streams." American Fisheries Society Special Publication 19: 83–138.

Bouwens, Kenneth A., and R. Jakubowski. 2016. *Idaho Salmonid Research and Monitoring Update – 2015*. Idaho Tributary Habitat Acquisition and Enhancement Program, Appendix A; Idaho Tributary Salmonid Abundance Monitoring; Pend Oreille Basin Bull Trout Redd Monitoring. Prepared for the Avista Corporation and the Idaho Department of Fish and Game, November.

Burglund, J. and R. McEldowney. 2008. MDT Wetland Assessment Method. Prepared for: Montana Department of Transportation. Post, Buckley, Schuh and Jernigan. Helena, Montana.

City of Sandpoint. 2018. Personal communication regarding drinking water sources between Jeff Crowley, Water Treatment Plant Superintendent, Water Department, and Sue PaDelford, Senior Biologist. June 26.

Downs, Christopher C., D. Horan, E. Morgan-Harris, and R. Jakubowski (Downs et al.). 2006. "Spawning Demographics and Juvenile Dispersal of an Adfluvial Bull Trout Population in Trestle Creek, Idaho." North American Journal of Fisheries Management, 26: 190–200

Dupont, Joseph M., R. S. Brown, and D. R. Geist (Dupont et al). 2007. "Unique Allacustrine Migration Patterns of a Bull Trout Population in the Pend Oreille River Drainage, Idaho." North American Journal of Fisheries Management, 27(4): 1268–1275

Preliminary Draft for Agency Review

Federal Highway Administration, Indiana Department of Transportation, Joint Transportation Research Program (FHWA/IN/JTRP). 2002 through 2004. "Load Tests on Pipe Piles for Development of CPT-Based Design Method." Kwangkyun Kim, Rodrigo Salgado, Junhwan Lee and Kyuho Paik. Indiana Department of Transportation.

Fisheries Hydroacoustic Working Group. 2008. Agreement in Principal for Interim Criteria for Injury to Fish from Pile Driving Activities. Memorandum of Agreement between NOAA Fisheries' Northwest and Southwest Regions; USFWS Regions 1 and 8; California, Washington, and Oregon Departments of Transportation; California Department of Fish and Game; and Federal Highways Administration. June 12.

GeoEngineers. 2014. Sediment Assessment-Clark Fork River Delta, Lake Pend Oreille, Bonner County, Idaho. File No. 15387-014-00. May 29.

Hastings, M. C. 2007. Calculation of SEL for Govoni et al. (2003, 2007) and Popper et al. (2007) studies. Report for Amendment to Project 15218, J&S Working Group, Applied Research Lab, Penn State University. pp 7.

Hastings, M.C., and A. N. Popper. 2005. *Effects of Sound on Fish*. Prepared by Jones and Stokes for the California Department of Transportation, Sacramento, California. p. 82. August.

Hastings, M.C., A. N. Popper, J. J. Finneran, and P. Lanford (Hastings et al.). 1996. "Effects of low-frequency underwater sound on hair cells of the inner ear and lateral line of the teleost fish *Astronotus ocellatus*." Journal of the Acoustical Society of America. 99(3): 1759–1766.

Idaho Department of Environmental Quality (IDEQ). 2017. *Idaho's 2014 Integrated Report.* Prepared by Cara Hastings and Jason Williams, IDEQ. February.

———. 2018. *Draft Section 401 Water Quality Certification.* April 4.

Idaho Department of Fish and Game. 2017a. Telephone conversation regarding bull trout in Project area and email communications with attachments of bull trout research papers between Kiira Siitari, Environmental Staff Biologist, Coeur d'Alene, Idaho, and Diane Williams, Environmental Planner, Jacobs. September 3 through 5.

———. 2017b. Personal communication regarding potential Project mitigation opportunities between Kathy Cousins, Mitigation Staff Biologist, Coeur d'Alene, Idaho, and Diane Williams, Environmental Planner, Jacobs. October 17.

Idaho Department of Lands (IDL). 2017. Email communication regarding designation of Sand Creek vs. Lake Pend Oreille. From A. Fuson, Senior Resource Specialist-Navigable Waters, Pend Oreille Supervisory Office to Diane Williams, Environmental Planner, Jacobs. October 24.

Jacobs Engineering Group Inc. (Jacobs). 2018a. *Wetlands and Waters of the U.S. Delineation Report, BNSF Railway Sandpoint Junction Connector*. January 17.

_____. 2018c. Reasonable Needs of Navigation Analysis for Bridge 3.9, Sandpoint Junction Connector Project. January.

Preliminary Draft for Agency Review

Karlowskis, Victor. 2014. "Soil Plugging of Open-Ended Piles During Impact Driving in Cohesion-less Soil." Master of Science Thesis, Royal Institute of Technology, Stockholm, Sweden.

Lloyd, D. S., J. P. Koenings, and J. D. LaPerriere (Lloyd et al). 1987. Effects of turbidity in fresh waters of Alaska." North American Journal of Fisheries Management. 7:18–33.

McCubbins, Jonathan L., M. J. Hansen, J. M. DosSantos, and A. M. Dux (McCubbins et al.). 2016. Demographic Characteristics of an Adfluvial Bull Trout Population in Lake Pend Oreille, Idaho. North American Journal of Fisheries Management. 36(6): 1269–1277.

McPhail, J. D., and J. S. Baxter. 1996. A Review of Bull Trout Life History and Habitat Use in Relation to Compensation and Improvement Opportunities. Fisheries Management Report No. 104. Department of Zoology, University of British Columbia, Vancouver, BC, Canada.

Miller, Mark, E. Iverson, and D. Essig (Miller et al.). 2014. Geography and Timing of Salmonid Spawning in Idaho. Prepared by BioAnalysts, Inc. and Anchor QEA for the Idaho Department of Environmental Quality. April 25.

National Marine Fisheries Service (NMFS). 2006. "Impact Pile Driving Sound Attenuation Specification." Western Washington Fish and Wildlife Office. Revised October 31.

_____. 2007. Rationale for the Use of 187 dB Sound Exposure Level for Pile Driving Impacts Threshold. Unpublished Memorandum. Seattle, Washington. National Oceanic and Atmospheric Administration, National Marine Fisheries Service.

Northwest Power Planning Council. 2000. Draft Pend Oreille Subbasin Summary. October.

Paik, Kyuho, R. Salgado, J. Lee, and B. Kim (Paik et al.). 2003. "Behavior of Open- and Closed-Ended Piles Driven Into Sands." Journal of Geotechnical and Geoenvironmental Engineering, Volume 129 (Issue 4). Also at https://ascelibrary.org/doi/pdf/10.1061/(ASCE)1090-0241(2003)129%3A4(296). Accessed July 2, 2018.

Parsons. 2007. *Pend Oreille Tributaries Sediment Total Maximum Daily Loads*. Prepared for the Idaho Department of Environmental Quality, December 17.

Popper, A. N. 2003. "Effects of anthropogenic sounds on fishes." Fisheries 28 (10):24–31.

Popper, A. N., M. E. Smith, P. A. Cott, B. W. Hanna, A. O. MacGillivray, M. E. Austin, and D. A. Mann (Popper et al.). 2005. "Effects of exposure to seismic airgun use on hearing of three fish species." Journal of the Acoustical Society of America. 117:3958–3971.

Robert Miner Dynamic Testing, Inc. 2008. Letter regarding Underwater Sound Level Measurements. Pier Replacements, BNSF Long Bridge, Sandpoint, ID. July 31.

Servizi, J. A., and D. W. Martens. 1991. "Effect of temperature, season, and fish size on acute lethality of suspended sediments to coho salmon (*Oncorhynchus kisutch*)." Canadian Journal of Fisheries and Aquatic Sciences. 48: 493–497

Preliminary Draft for Agency Review

Sigler, J. W., T. C. Bjornn, and F. H. Everest. 1984. "Effects of chronic turbidity on density and growth of steelheads and coho salmon." Transactions of the American Fisheries Society. 113: 142–150.

Singh, Priyank Kumar. 2014. *Behaviour of Open and Closed End Pile Groups Subjected to Vertical Loading: A Comparative Study*. Department of Civil Engineering, National Institute of Technology, Kurukshetra, Haryana, India. May. Also at http://www.engineeringcivil.com. Accessed November 24, 2017.

State of Idaho, Department of Environmental Quality. 2017. *Pend Oreille Lake and River Tributaries TMDL Five-Year Review*. April.

_____. 2017. *Idaho's 2014 Integrated Report*. Boise, Idaho. February.

Turnpenny, A., and J. Nedwell. 1994. "The Effects on Marine Fish, Diving Mammals and Birds of Underwater Sound Generated by Seismic Surveys." Fawley Aquatic Research Laboratories Limited. Marine and Freshwater Biology Unit, Southampton, Hampshire. UK. p. 48.

Turnpenny, A. W. H., K. P. Thatcher, and J. R. Nedwell (Turnpenny et al.). 1994. "The effects on fish and other marine animals of high-level underwater sound." Fawley Aquatic Research Laboratory, Ltd., Report FRR 127/94, UK. p 79. October.

U.S. Environmental Protection Agency (USEPA). 2017. National Pollutant Discharge Elimination System General Permit for Discharges from Construction Activities. https://www.epa.gov/sites/production/files/2017-06/documents/2017_cgp_final_permit_508.pdf. February 16.

_____. n.d. *Idaho Water Quality Assessment Report* at https://ofmpub.epa.gov/waters10/attains_state.control?p_state=ID&p_cycle=2014. Accessed September 20, 2017.

U.S. Fish and Wildlife Service (USFWS). 1982. Grizzly Bear Recovery Plan. https://www.fws.gov/mountain-prairie/es/species/mammals/grizzly/Grizzly_bear_recovery_plan.pdf.

_____. 1998. *A Framework to Assist in Making Endangered Species Act Determinations of Effect for Individual or Grouped Actions at the Bull Trout Subpopulation Watershed Scale*. Adapted from the National Marine Fisheries Service. February.

_____. 1999. *Determination of Threatened Status for Bull Trout in the Coterminous United States*. 64 FR 58910-58933; November 1.

_____. 2002. *Bull Trout Draft Recovery Plan*; Chapter 3- Clark Fork River Recovery Unit, Montana, Idaho, and Washington. Portland, Oregon.

_____. 2009. *Bull Trout Proposed Critical Habitat Justification: Rationale for Why Habitat is Essential, and Documentation of Occupancy*. Boise, Idaho. November 10.

Preliminary Draft for Agency Review

_____. 2010. *Endangered and Threatened Wildlife and Plans; Revised Designation of Critical Habitat for Bull Trout in the Coterminous United States*. 75 FR 63897-64070; October 18.

_____. 2012. Designation of Critical habitat for the Southern Selkirk Mountains Population of Woodland Caribou. 11/28/2012. 77 FR 71040 71082

_____. 2013. Canada Lynx, Lynx canadensis. https://www.fws.gov/mountain-prairie/es/species/mammals/lynx/CandaLynxFactSheet_091613.pdf

_____.2014. Wolverine. https://www.fws.gov/mountain-prairie/es/species/mammals/wolverine/) Accessed August 21, 2018

_____. 2015a. *Recovery plan for the coterminous United States population of bull trout (Salvelinus confluentus).* Portland, Oregon.

_____. 2015b. *Biological Opinion for the Regional General Permit 27 – Lake Pend Oreille and Pend Oreille River*. Project Number: 01EIFW00-2015-0125. Northern Idaho Field Office, Spokane Valley, WA. February.

_____. 2015c. *Columbia Headwaters Recovery Unit Implementation Plan for Bull Trout (Salvelinus confluentus).* Prepared by Montana Ecological Services Office and Northern Idaho/Eastern Washington Field Office. September.

_____. 2015d. Biological Opinion for the Idaho Water Quality Standards for Numeric Water Quality Criteria for Toxic Pollutants. Idaho Fish and Wildlife Office, Boise, Idaho. June 25.

_____. n.d. Environmental Conservation Online System (ECOS). Species Profile for Bull Trout at https://ecos.fws.gov/ecp0/profile/speciesProfile?sId=8212#status. Accessed September 1, 2017.

_____. n.d. Washington Fish and Wildlife Office. Bull Trout information at https://www.fws.gov/wafwo/articles.cfm?id=149489585. Accessed September 21, 2017.

_____. 2017a. Telephone conversation and emails with attachments regarding preferred documents for use in preparing bull trout biological assessments. From Benjamin Matibag, Fisheries Biologist, Idaho Fish and Wildlife Office, Boise, Idaho. To Diane Williams, Environmental Planner, Jacobs. August 15 and September 25.

_____. 2017b. Telephone communications regarding bull trout in Project area and impact assessment and email communication regarding work windows with attachment regarding recent USFWS bull trout biological opinion in Project area between Marshall Williams, Fish and Wildlife Biologist, Eastern Washington/Northern Idaho Field Office, Spokane, Washington, and Diane Williams, Environmental Planner, Jacobs. October 2 through 11 and November 1.

_____. 2018. Email communication noting that Bridge 3.1 is in bull trout critical habitat per federal designation of lower Sand Creek as an inlet of Lake Pend Oreille; between Marshall Williams, Fish and Wildlife Biologist, Eastern Washington/Northern Idaho Field Office, and USCG, USACE, IDEQ, and Jacobs. June 7.

Preliminary Draft for Agency Review

Washington State Department of Transportation (WSDOT). 2018. *Biological Assessment Preparation – Advanced Training Manual Version August-2018*.

_____. n.d. Pile Strike Summary Table at https://www.wsdot.wa.gov/NR/rdonlyres/42F72E68-C26D-4C61-8741-121050313200/0/BA_PileStrikeSummaryTable.pdf; accessed November 24, 2017.

Valencia Wetlands Trust. 2017. Email communication regarding available wetland bank credits. From D. Collier, Managing Partner. To Diane Williams, Environmental Planner, Jacobs. October 19.

Preliminary Draft for Agency Review

Appendix A

Project Plans

Preliminary Draft for Agency Review

TEMPORARY WORK BRIDGE 3.1

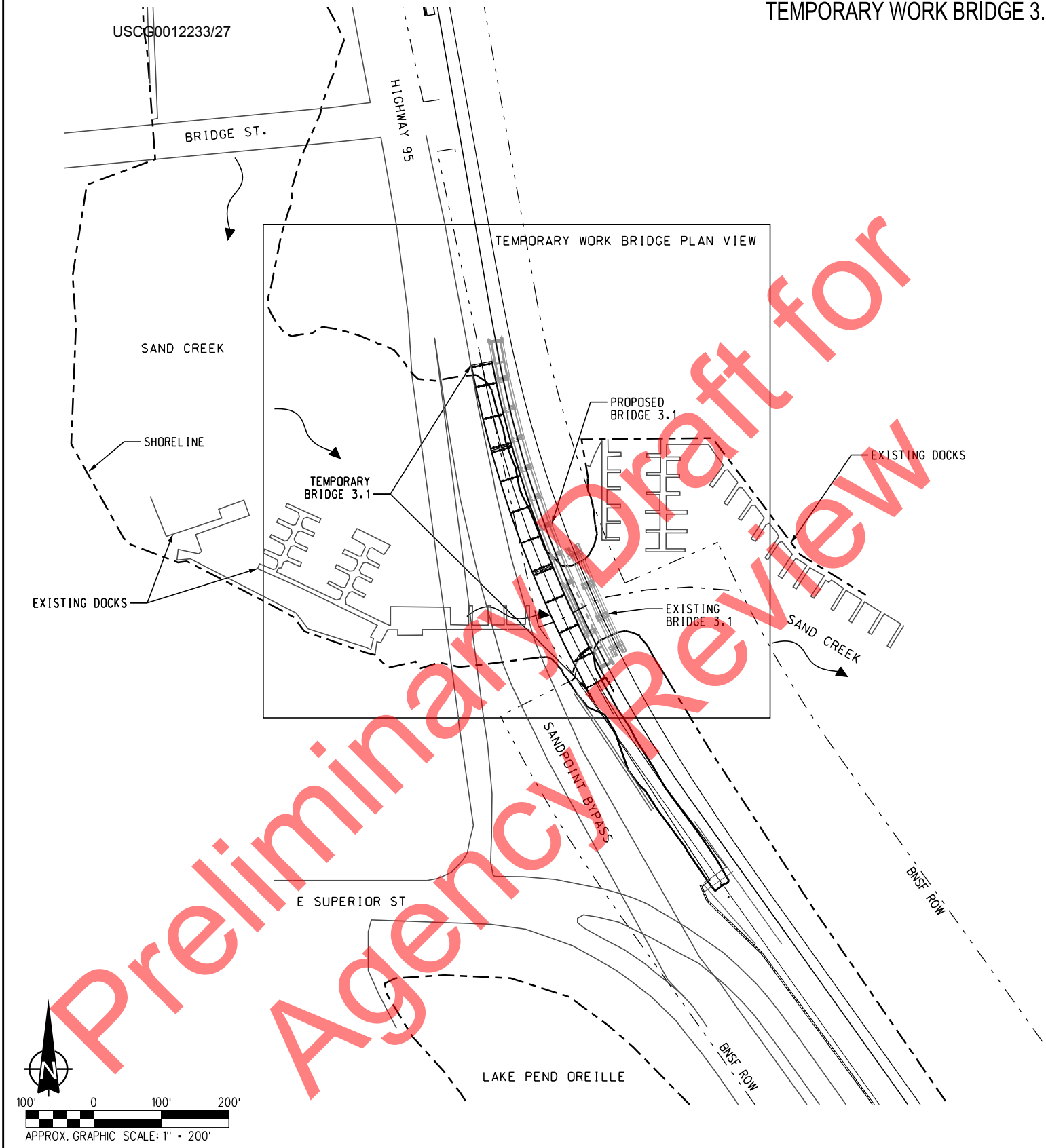

Preliminary Draft for Agency Review

BASED ON: HANSON PROFESSIONAL SERVICES, INC. PRELIMINARY PLANS. ELEVATIONS ARE RELATIVE TO NAVD88. CONCEPTUAL PLANS UTILIZED TO OBTAIN COAST GUARD BRIDGE PERMIT

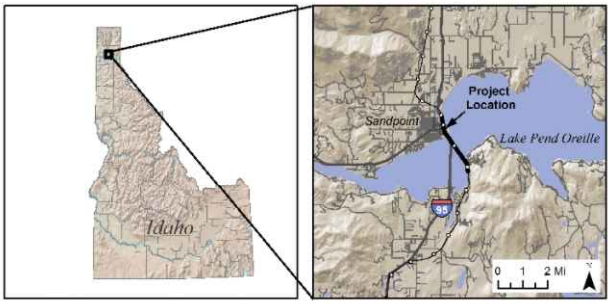

LOCATION / VICINITY MAP

AGENCY REF. NO.:
PROJECT: BNSF / SANDPOINT JUNCTION CONNECTOR BRIDGE 3.1
OWNER: BNSF RAILWAY COMPANY
CONSULTANT: JACOBS ENGINEERING GROUP
LOCATION: BNSF BRIDGE 3.1 MONTANA DIVISION, KOOTENAI RIVER SUB, LINE SEGMENT 45, MP 3.1
MILE POINT OF BRIDGE LOCATION FROM MOUTH: 0.1
WATERWAY: SAND CREEK
CITY: SANDPOINT **COUNTY:** BONNER **STATE:** IDAHO
DATE: 08/07/2018

8/14/2018 2:42:32 PM $USER$
P:\W3X76600\6000\SC\620DESIGN\JARPA\SPJ_CG_BR3-1_Temp_Vicinity.dgn

USCG0012243/27

PLAN VIEW

TEMPORARY WORK BRIDGE 3.1

SAMPLE DEPTHS	
NAME	OLW DEPTH (FEET)
D-1	3.2
D-2	4.2
D-3	6.5

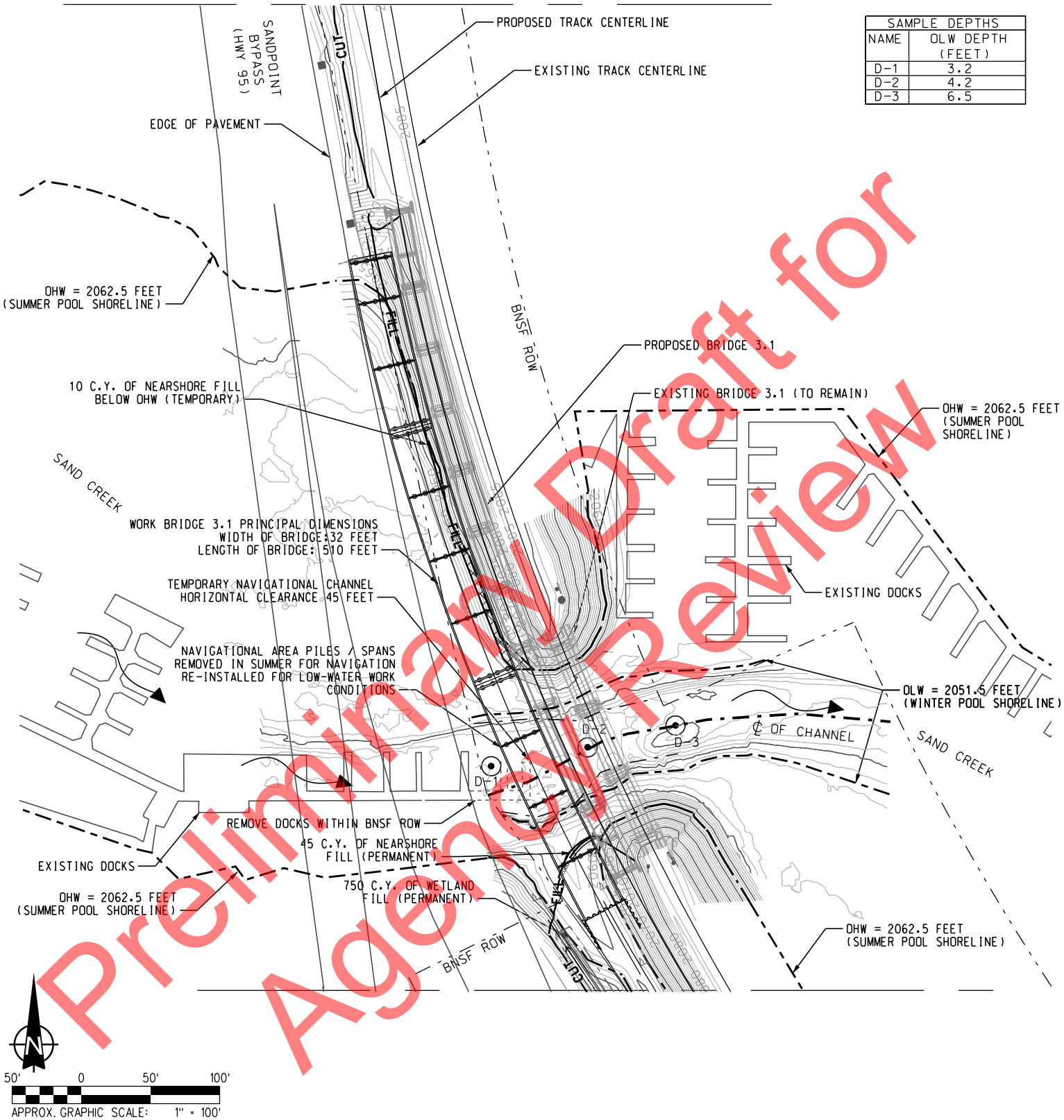

Preliminary Draft for Agency Review

BASED ON: HANSON PROFESSIONAL SERVICES, INC. PRELIMINARY PLANS. ELEVATIONS ARE RELATIVE TO NAVD88. CONCEPTUAL PLANS UTILIZED TO OBTAIN COAST GUARD BRIDGE PERMIT

LEGEND

- BNSF RIGHT-OF-WAY (ROW)
- SHORELINE (SUMMER AND WINTER POOL)
- CENTERLINE OF NAVIGATIONAL CHANNEL
- LIMITS OF NAVIGATIONAL CHANNEL
- STRUCTURE (ROADS, DOCKS)

TEMPORARY WORK BRIDGE

AGENCY REF. NO.:
PROJECT: BNSF / SANDPOINT JUNCTION CONNECTOR BRIDGE 3.1
OWNER: BNSF RAILWAY COMPANY
CONSULTANT: JACOBS ENGINEERING GROUP
LOCATION: BNSF BRIDGE 3.1 MONTANA DIVISION, KOOTENAI RIVER SUB, LINE SEGMENT 45, MP 3.1
MILE POINT OF BRIDGE LOCATION FROM MOUTH: 0.1
WATERWAY: SAND CREEK
CITY: SANDPOINT **COUNTY:** BONNER **STATE:** IDAHO
DATE: 08/07/2018

8/14/2018 2:29:36 PM $USLH$
P:\W3X76600\6000NSC\6200ESIGN\JARPA\SPJ_CG_BR3-1_Temp_RS-06.dgn

USCG0012253/27

ELEVATION VIEW

TEMPORARY WORK BRIDGE 3.1

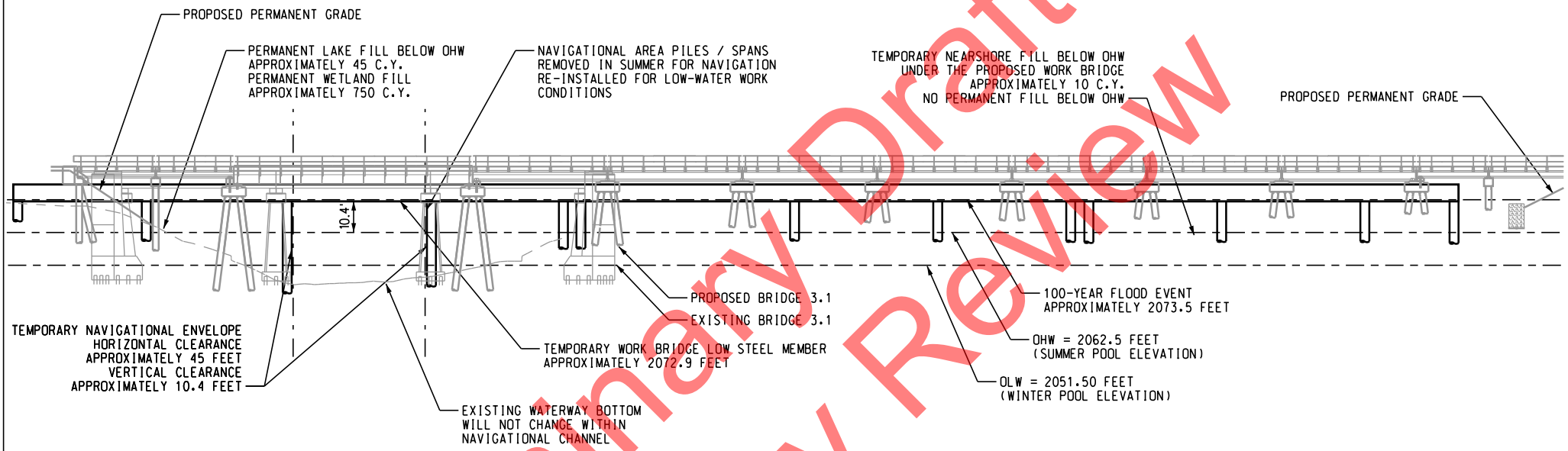

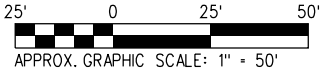

BASED ON: HANSON PROFESSIONAL SERVICES, INC. PRELIMINARY PLANS. ELEVATIONS ARE RELATIVE TO NAVD88. CONCEPTUAL PLANS UTILIZED TO OBTAIN COAST GUARD BRIDGE PERMIT

Preliminary Draft for Agency Review

LEGEND

- - — - — SHORELINE (SUMMER AND WINTER POOL; 100-YEAR FLOOD)

- - — - — LIMITS OF NAVIGATIONAL CHANNEL

TEMPORARY WORK BRIDGE

AGENCY REF. NO.:
PROJECT: BNSF / SANDPOINT JUNCTION CONNECTOR BRIDGE 3.1
OWNER: BNSF RAILWAY COMPANY
CONSULTANT: JACOBS ENGINEERING GROUP
LOCATION: BNSF BRIDGE 3.1 MONTANA DIVISION, KOOTENAI RIVER SUB, LINE SEGMENT 45, MP 3.1
MILE POINT OF BRIDGE LOCATION FROM MOUTH: 0.1
WATERWAY: SAND CREEK
CITY: SANDPOINT **COUNTY:** BONNER **STATE:** IDAHO
DATE: 08/07/2018

8/14/2018 2:43:10 PM $USER$
P:\W3X7600\600DISC\620DESIGN\JARPA\SPJ_CG_BR3-1_Temp_Elev.dgn

USCG0012263/27

TYPICAL SECTION VIEW

TEMPORARY WORK BRIDGE 3.1

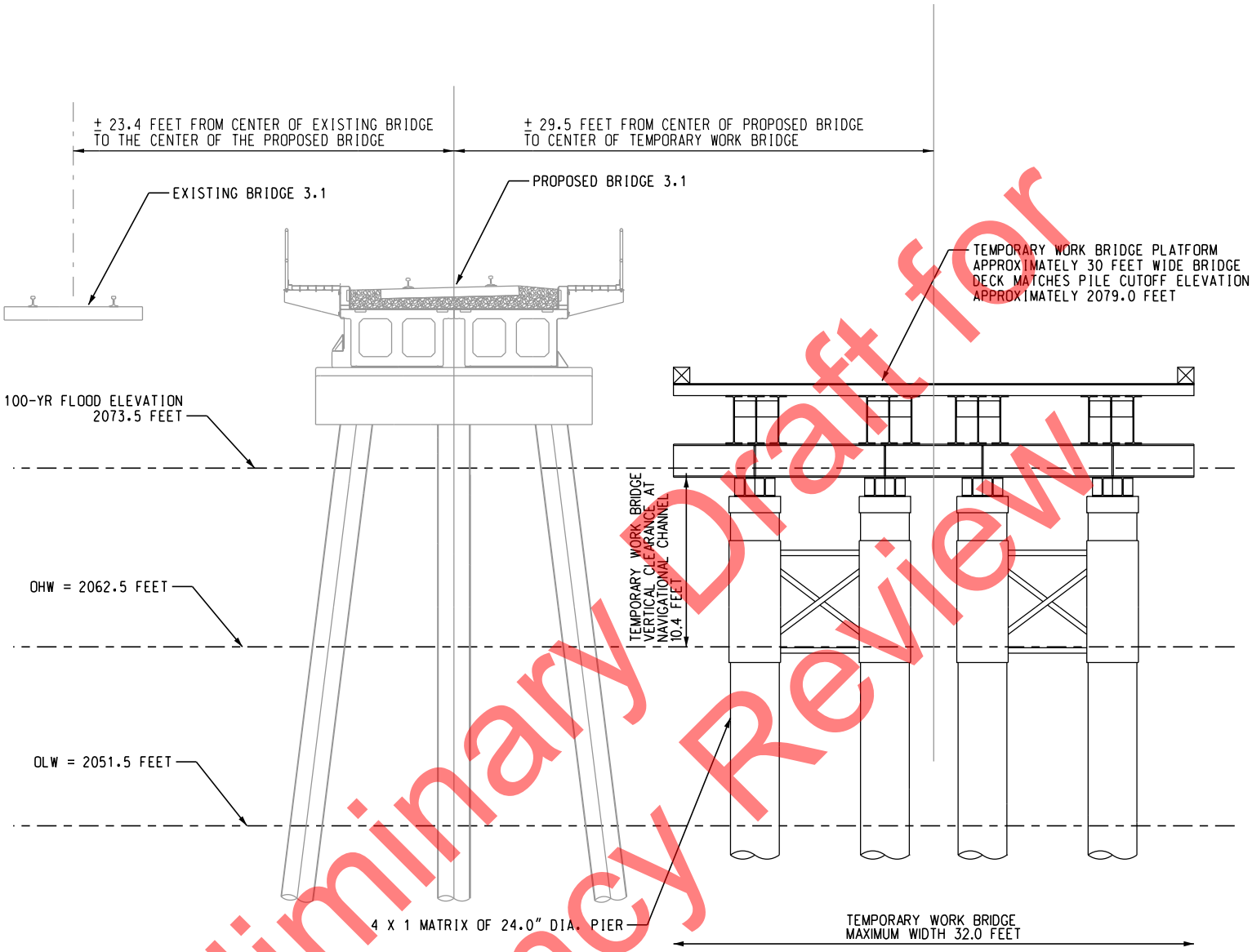

Preliminary Draft for Agency Review

5' 0 5' 10'

APPROX. GRAPHIC SCALE: 1" = 10'

BASED ON: HANSON PROFESSIONAL SERVICES, INC. PRELIMINARY PLANS. ELEVATIONS ARE RELATIVE TO NAVD88. CONCEPTUAL PLANS UTILIZED TO OBTAIN COAST GUARD BRIDGE PERMIT

TEMPORARY WORK BRIDGE

AGENCY REF. NO.:
PROJECT: BNSF / SANDPOINT JUNCTION CONNECTOR BRIDGE 3.1
OWNER: BNSF RAILWAY COMPANY
CONSULTANT: JACOBS ENGINEERING GROUP
LOCATION: BNSF BRIDGE 3.1 MONTANA DIVISION, KOOTENAI RIVER SUB, LINE SEGMENT 45, MP 3.1
MILE POINT OF BRIDGE LOCATION FROM MOUTH: 0.1
WATERWAY: SAND CREEK
CITY: SANDPOINT **COUNTY:** BONNER **STATE:** IDAHO
DATE: 08/07/2018

8/14/2018 2:49:39 PM NJSK4A
R:\W37560\600DSC\620DESIGN\JARPA\SP-J_CG_BR3-1_Temp_Typical KS.dgn

TEMPORARY WORK BRIDGE 3.9

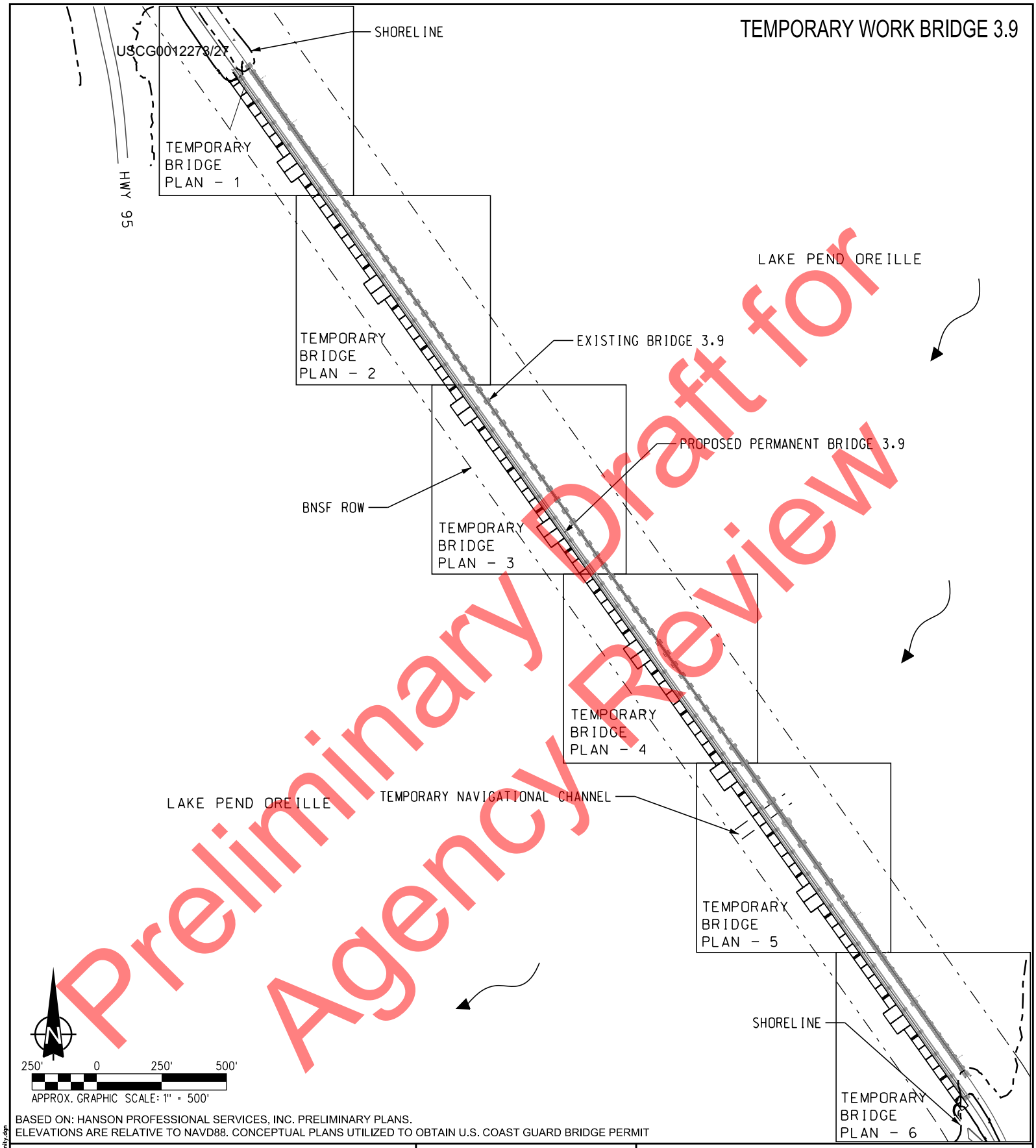

Preliminary Draft for Agency Review

BASED ON: HANSON PROFESSIONAL SERVICES, INC. PRELIMINARY PLANS.
ELEVATIONS ARE RELATIVE TO NAVD88. CONCEPTUAL PLANS UTILIZED TO OBTAIN U.S. COAST GUARD BRIDGE PERMIT

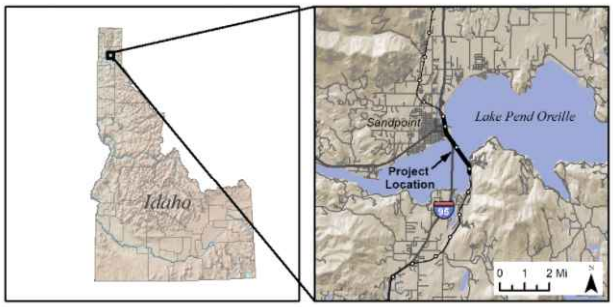

VICINITY / LOCATION MAP

AGENCY REF. NO.:
PROJECT: BNSF / SANDPOINT JUNCTION CONNECTOR BRIDGE 3.9
OWNER: BNSF RAILWAY COMPANY
CONSULTANT: JACOBS ENGINEERING GROUP
LOCATION: BNSF BRIDGE 3.9 MONTANA DIVISION, KOOTENAI RIVER SUB, LINE SEGMENT 45, MP 3.9
MILE POINT OF BRIDGE LOCATION FROM MOUTH: 2.7
WATERWAY: LAKE PEND OREILLE
CITY: SANDPOINT **COUNTY:** BONNER **STATE:** IDAHO
DATE: 08/17/2018

8/17/2018 1:55:34 PM USERS
P:\W3X76600\600DISC\620DESIGN\JARPA\SPJ_CG_BR3-9_Temp_Vicinity.dgn

USCG0012283/27

PLAN VIEW - 1

TEMPORARY WORK BRIDGE 3.9

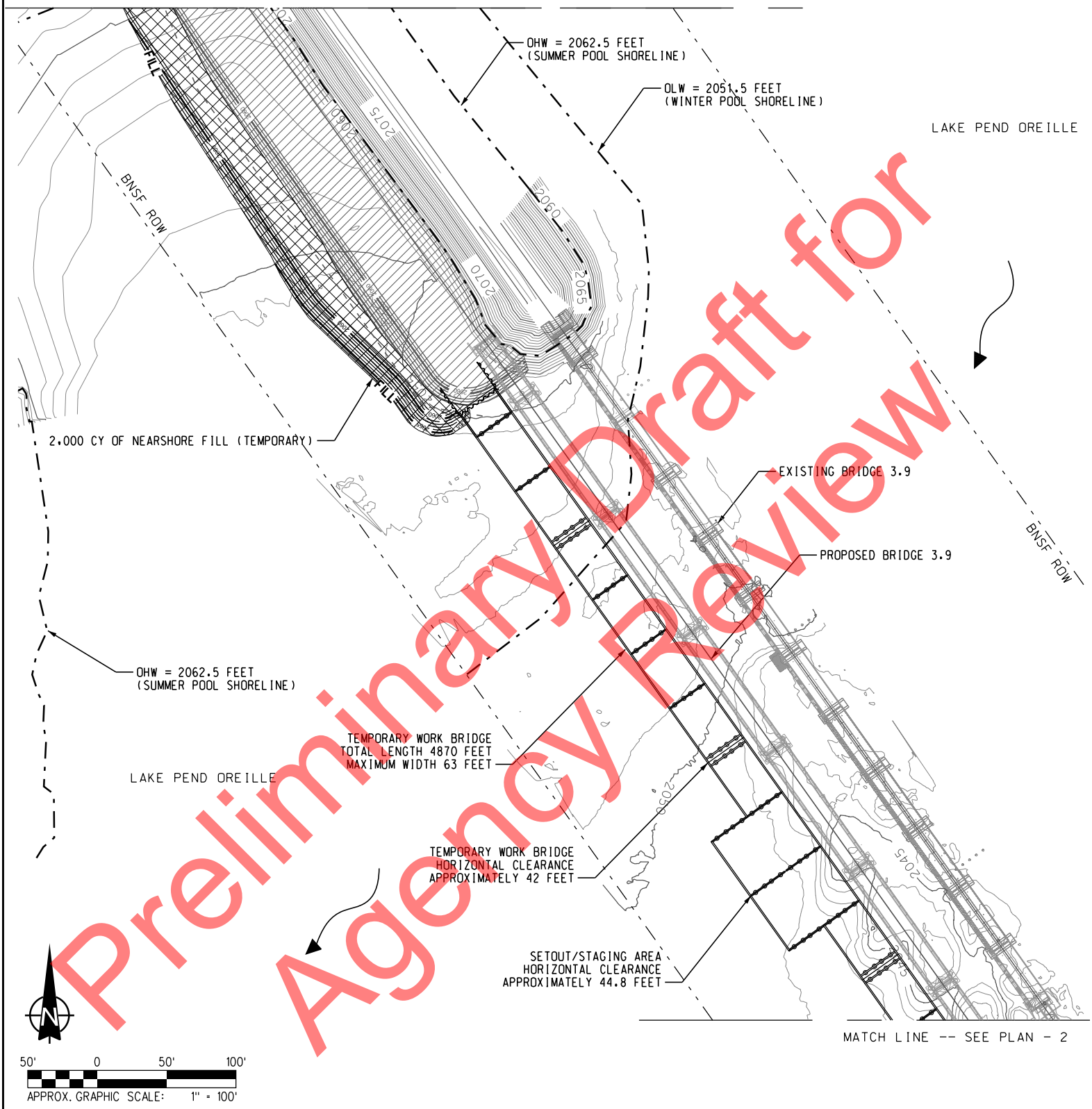

Preliminary Draft for Agency Review

BASED ON: HANSON PROFESSIONAL SERVICES, INC. PRELIMINARY PLANS. ELEVATIONS ARE RELATIVE TO NAVD88. CONCEPTUAL PLANS UTILIZED TO OBTAIN U.S. COAST GUARD BRIDGE PERMIT

LEGEND

- BNSF RIGHT-OF-WAY (ROW)
- SHORELINE (SUMMER AND WINTER POOL)
- STRUCTURE (ROADS, DOCKS)

TEMPORARY WORK BRIDGE

AGENCY REF. NO.:
PROJECT: BNSF / SANDPOINT JUNCTION CONNECTOR BRIDGE 3.9
OWNER: BNSF RAILWAY COMPANY
CONSULTANT: JACOBS ENGINEERING GROUP
LOCATION: BNSF BRIDGE 3.9 MONTANA DIVISION, KOOTENAI RIVER SUB, LINE SEGMENT 45, MP 3.9
MILE POINT OF BRIDGE LOCATION FROM MOUTH: 2.7
WATERWAY: LAKE PEND OREILLE
CITY: SANDPOINT **COUNTY:** BONNER **STATE:** IDAHO
DATE: 08/17/2018

8/17/2018 10:74.5 HM NDS.HS
P:\W3276600\600DSC\620DESIGN\JARPA\SPJ_CG_BR3-9_Temp_RS-10.dgn

TEMPORARY WORK BRIDGE 3.9

PLAN VIEW - 2

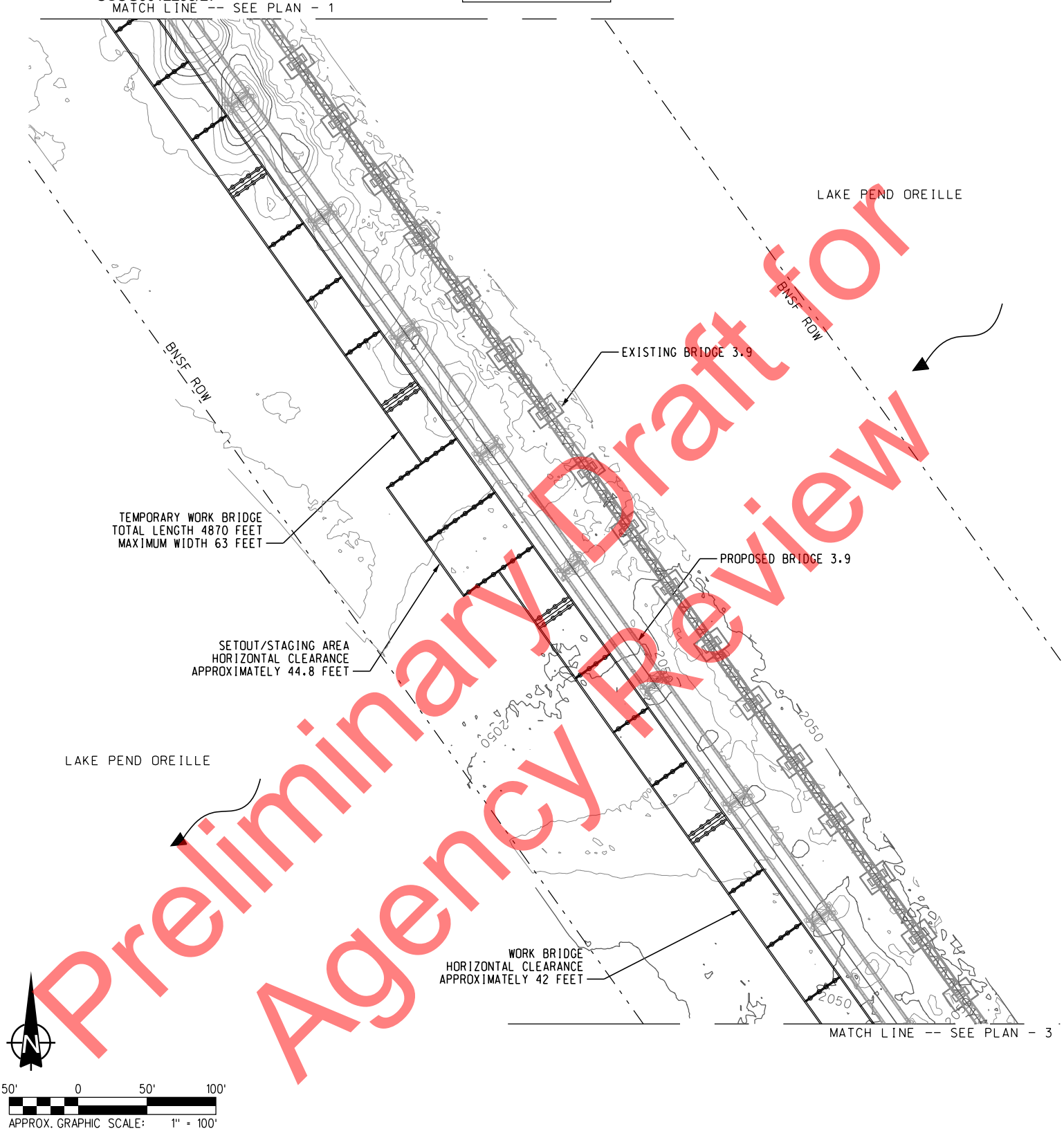

Preliminary Draft for Agency Review

BASED ON: HANSON PROFESSIONAL SERVICES, INC. PRELIMINARY PLANS. ELEVATIONS ARE RELATIVE TO NAVD88. CONCEPTUAL PLANS UTILIZED TO OBTAIN U.S. COAST GUARD BRIDGE PERMIT

LEGEND

— - - — - BNSF RIGHT-OF-WAY (ROW)

TEMPORARY WORK BRIDGE

AGENCY REF. NO.:
PROJECT: BNSF / SANDPOINT JUNCTION CONNECTOR BRIDGE 3.9
OWNER: BNSF RAILWAY COMPANY
CONSULTANT: JACOBS ENGINEERING GROUP
LOCATION: BNSF BRIDGE 3.9 MONTANA DIVISION, KOOTENAI RIVER SUB, LINE SEGMENT 45, MP 3.9
MILE POINT OF BRIDGE LOCATION FROM MOUTH: 2.7
WATERWAY: LAKE PEND OREILLE
CITY: SANDPOINT **COUNTY:** BONNER **STATE:** IDAHO
DATE: 08/17/2018

8/17/2018 1:13:13 PM $USER$
P:\W3X76600\6000ISC\6200ESIGN\JARPA\SPJ_CG_BR3-9_Temp_RS-11.dgn

TEMPORARY WORK BRIDGE 3.9

PLAN VIEW - 3

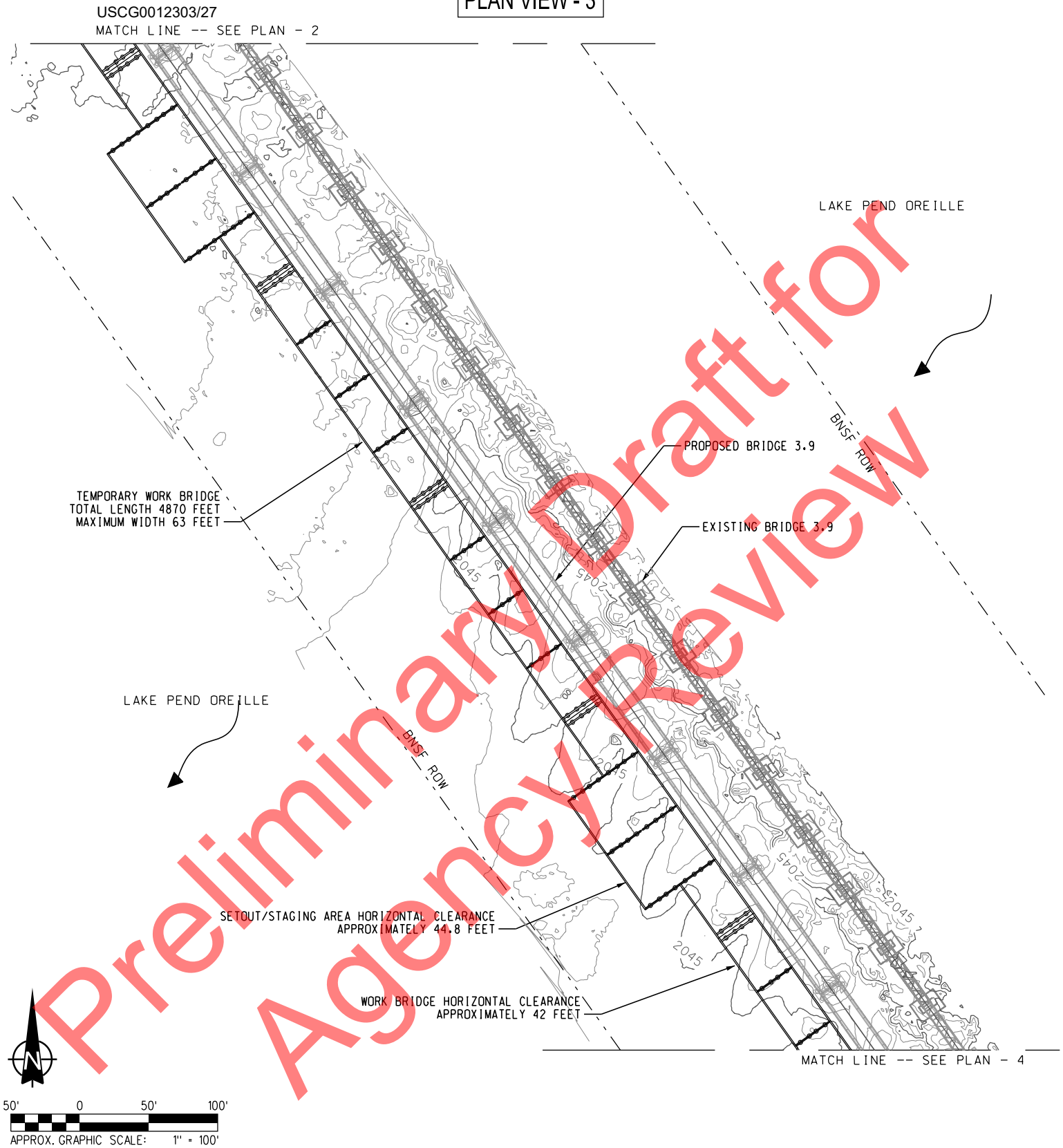

Preliminary Draft for Agency Review

BASED ON: HANSON PROFESSIONAL SERVICES, INC. PRELIMINARY PLANS. ELEVATIONS ARE RELATIVE TO NAVD88. CONCEPTUAL PLANS UTILIZED TO OBTAIN U.S. COAST GUARD BRIDGE PERMIT

LEGEND

— - - — - BNSF RIGHT-OF-WAY (ROW)

TEMPORARY WORK BRIDGE

AGENCY REF. NO.:
PROJECT: BNSF / SANDPOINT JUNCTION CONNECTOR BRIDGE 3.9
OWNER: BNSF RAILWAY COMPANY
CONSULTANT: JACOBS ENGINEERING GROUP
LOCATION: BNSF BRIDGE 3.9 MONTANA DIVISION, KOOTENAI RIVER SUB, LINE SEGMENT 45, MP 3.9
MILE POINT OF BRIDGE LOCATION FROM MOUTH: 2.7
WATERWAY: LAKE PEND OREILLE
CITY: SANDPOINT **COUNTY:** BONNER **STATE:** IDAHO
DATE: 08/17/2018

8/17/2018 1:19:11 PM $USER$
P:\W3X76600\6000ISC\6200ESIGN\JARPA\SPJ_CG_BR3-9_Temp_RS-12.dgn

PLAN VIEW - 4

TEMPORARY WORK BRIDGE 3.9

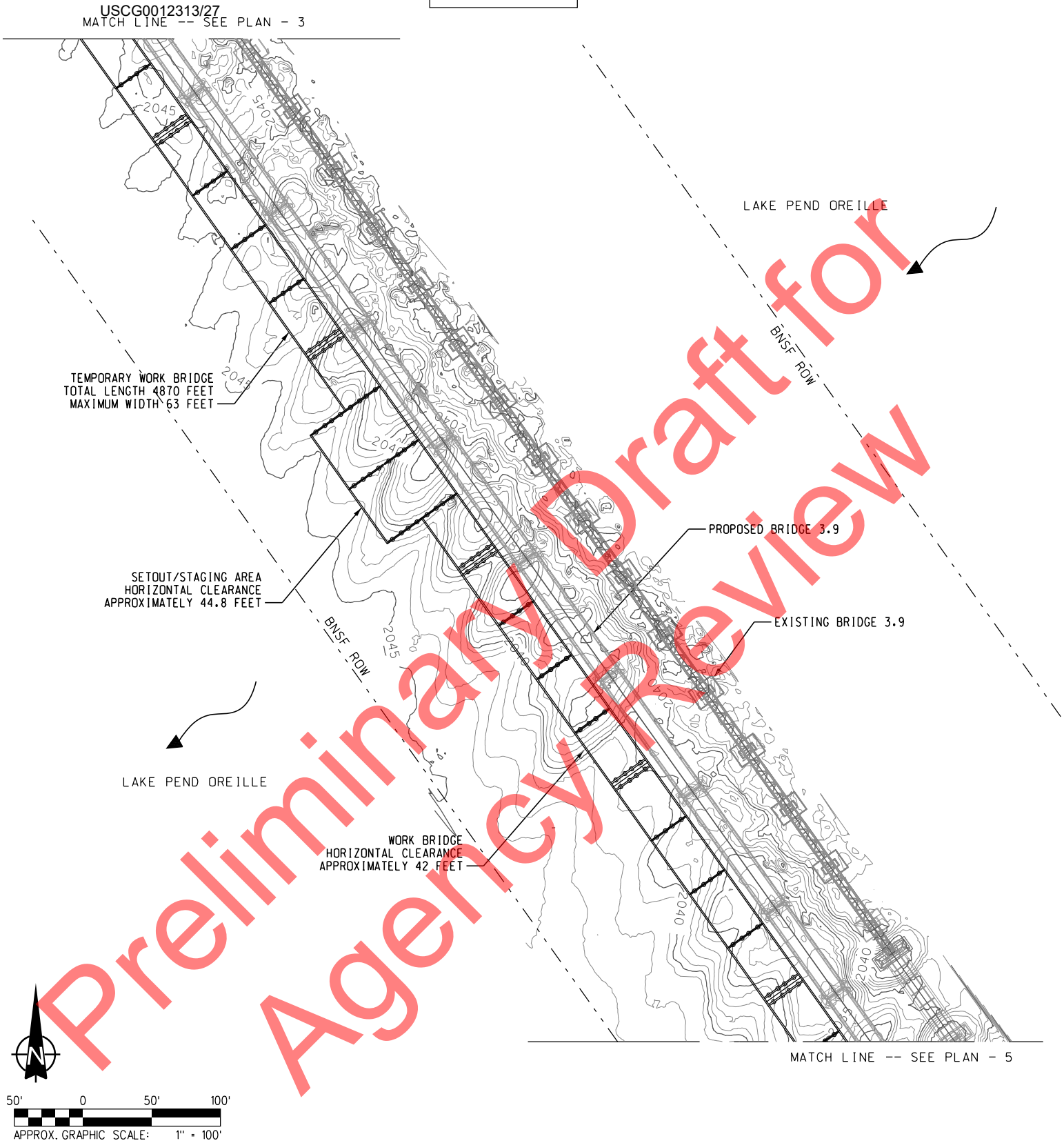

Preliminary Draft for Agency Review

BASED ON: HANSON PROFESSIONAL SERVICES, INC. PRELIMINARY PLANS. ELEVATIONS ARE RELATIVE TO NAVD88. CONCEPTUAL PLANS UTILIZED TO OBTAIN U.S. COAST GUARD BRIDGE PERMIT

LEGEND

— - - — - BNSF RIGHT-OF-WAY (ROW)

TEMPORARY WORK BRIDGE

AGENCY REF. NO.:
PROJECT: BNSF / SANDPOINT JUNCTION CONNECTOR BRIDGE 3.9
OWNER: BNSF RAILWAY COMPANY
CONSULTANT: JACOBS ENGINEERING GROUP
LOCATION: BNSF BRIDGE 3.9 MONTANA DIVISION, KOOTENAI RIVER SUB, LINE SEGMENT 45, MP 3.9
MILE POINT OF BRIDGE LOCATION FROM MOUTH: 2.7
WATERWAY: LAKE PEND OREILLE
CITY: SANDPOINT **COUNTY:** BONNER **STATE:** IDAHO
DATE: 08/17/2018

8/17/2018 1:14:02 PM $USER$
P:\W3X76600\600DISC\620DESIGN\JARPA\SPJ_CG_BR3-9_Temp_RS-13.dgn

PLAN VIEW - 5

TEMPORARY WORK BRIDGE 3.9

USCG0012323/27

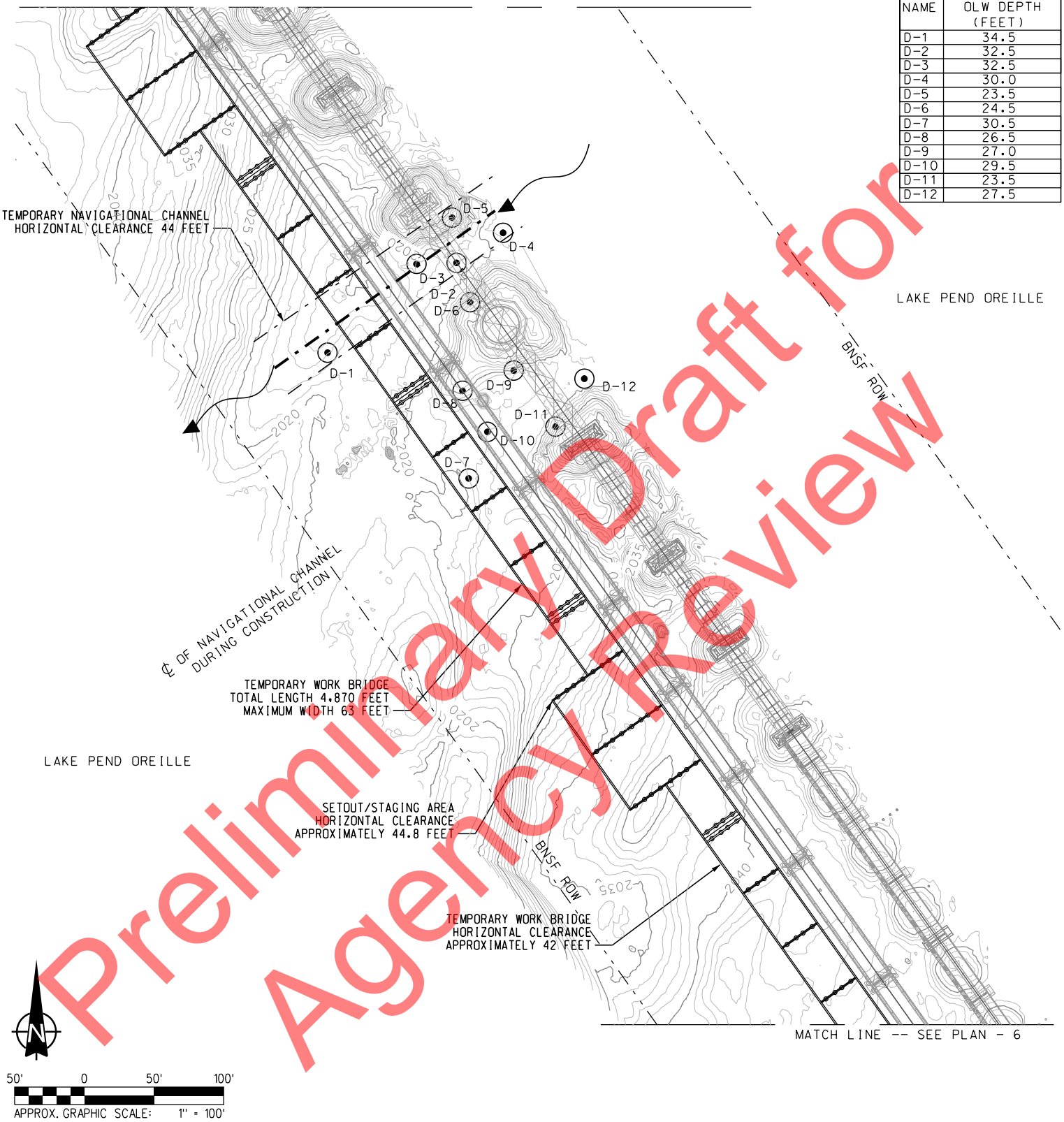

SAMPLE DEPTHS	
NAME	OLW DEPTH (FEET)
D-1	34.5
D-2	32.5
D-3	32.5
D-4	30.0
D-5	23.5
D-6	24.5
D-7	30.5
D-8	26.5
D-9	27.0
D-10	29.5
D-11	23.5
D-12	27.5

Preliminary Draft for Agency Review

BASED ON: HANSON PROFESSIONAL SERVICES, INC. PRELIMINARY PLANS. ELEVATIONS ARE RELATIVE TO NAVD88. CONCEPTUAL PLANS UTILIZED TO OBTAIN U.S. COAST GUARD BRIDGE PERMIT

LEGEND

- BNSF RIGHT-OF-WAY (ROW)
- SHORELINE (SUMMER AND WINTER POOL)
- CENTERLINE OF NAVIGATIONAL CHANNEL
- LIMITS OF NAVIGATIONAL CHANNEL

TEMPORARY WORK BRIDGE

AGENCY REF. NO.:
PROJECT: BNSF / SANDPOINT JUNCTION CONNECTOR BRIDGE 3.9
OWNER: BNSF RAILWAY COMPANY
CONSULTANT: JACOBS ENGINEERING GROUP
LOCATION: BNSF BRIDGE 3.9 MONTANA DIVISION, KOOTENAI RIVER SUB, LINE SEGMENT 45, MP 3.9
MILE POINT OF BRIDGE LOCATION FROM MOUTH: 2.7
WATERWAY: LAKE PEND OREILLE
CITY: SANDPOINT **COUNTY:** BONNER **STATE:** IDAHO
DATE: 08/17/2018

8/17/2018 2:05:19 PM $USER$
P:\W3X76600\6000ISC\620DESIGN\JARPA\SPJ_CG_BR3-9_Temp_RS-14.dgn

PLAN VIEW - 6

TEMPORARY WORK BRIDGE 3.9

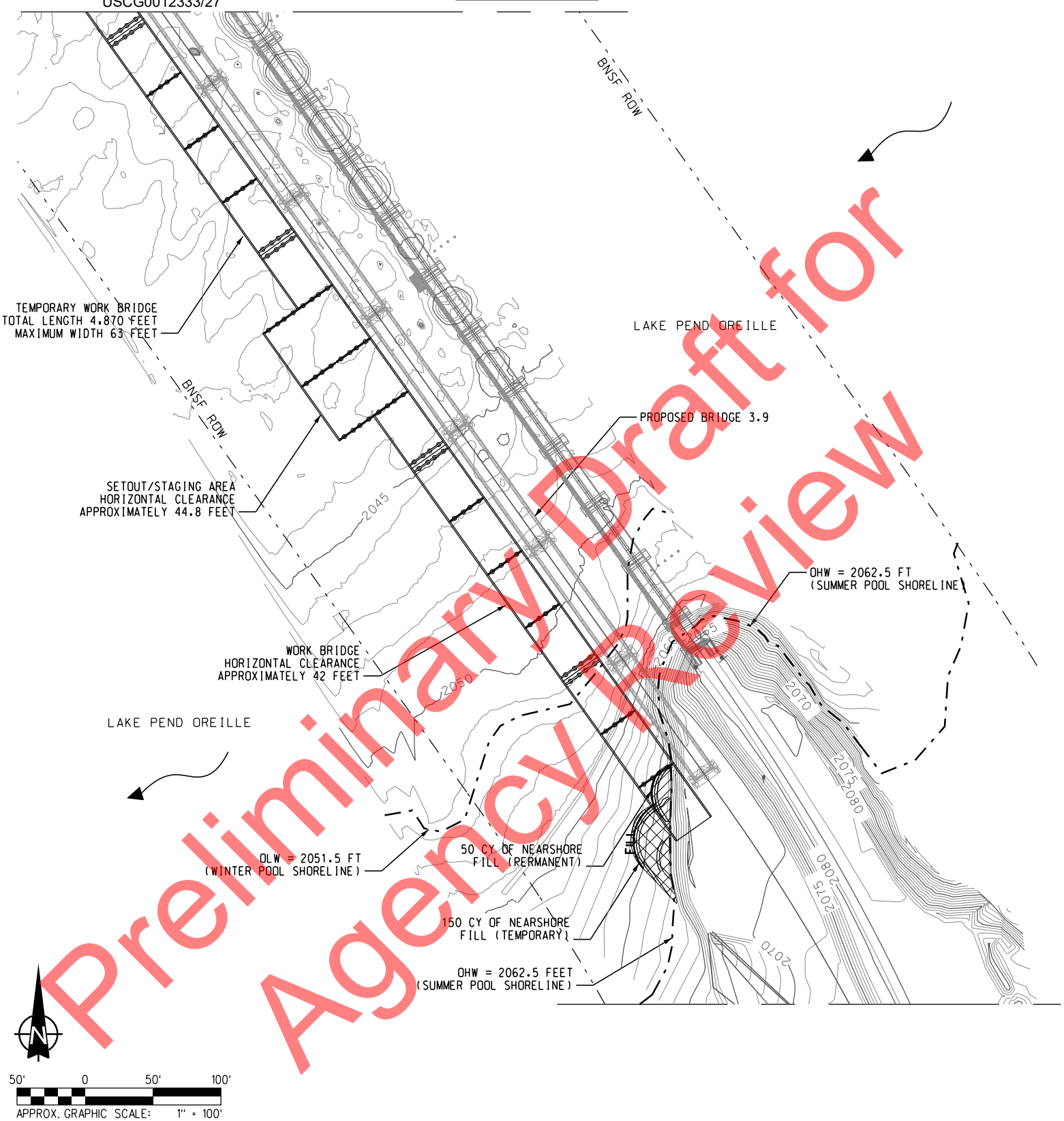

Preliminary Draft for Agency Review

BASED ON: HANSON PROFESSIONAL SERVICES, INC. PRELIMINARY PLANS. ELEVATIONS ARE RELATIVE TO NAVD88. CONCEPTUAL PLANS UTILIZED TO OBTAIN U.S. COAST GUARD BRIDGE PERMIT

LEGEND

- BNSF RIGHT-OF-WAY (ROW)
- SHORELINE (SUMMER AND WINTER POOL)
- STRUCTURE (ROADS, DOCKS)

TEMPORARY WORK BRIDGE

AGENCY REF. NO.:
PROJECT: BNSF / SANDPOINT JUNCTION CONNECTOR BRIDGE 3.9
OWNER: BNSF RAILWAY COMPANY
CONSULTANT: JACOBS ENGINEERING GROUP
LOCATION: BNSF BRIDGE 3.9 MONTANA DIVISION, KOOTENAI RIVER SUB, LINE SEGMENT 45, MP 3.9
MILE POINT OF BRIDGE LOCATION FROM MOUTH: 2.7
WATERWAY: LAKE PEND OREILLE
CITY: SANDPOINT **COUNTY:** BONNER **STATE:** IDAHO
DATE: 08/17/2018

8/17/2018 1:17:01 PM $USER$
P:\W3X76600\6000ISC\6200ESIGN\JARPA\SPJ_CG_BR3-9_Temp_RS-15.dgn

USCG0012343/27

ELEVATION VIEW - 1 TEMPORARY NEARSHORE FILL, NORTH END

TEMPORARY WORK BRIDGE 3.9

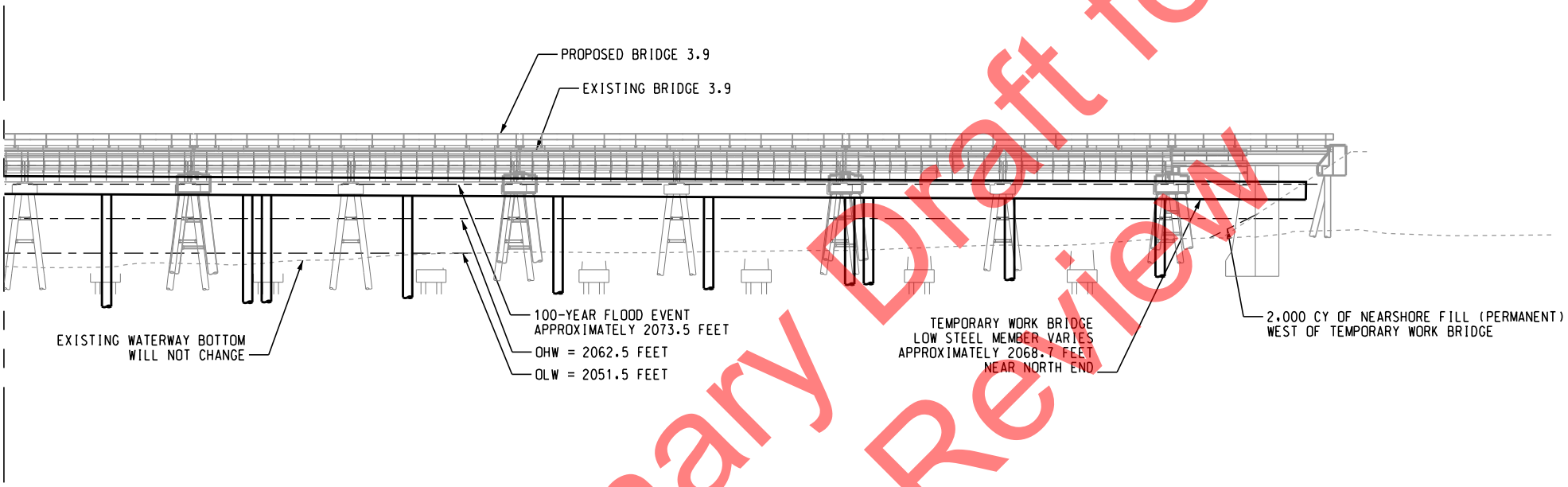

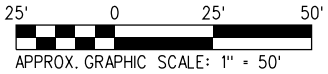

BASED ON: HANSON PROFESSIONAL SERVICES, INC. PRELIMINARY PLANS. ELEVATIONS ARE RELATIVE TO NAVD88. CONCEPTUAL PLANS UTILIZED TO OBTAIN U.S. COAST GUARD BRIDGE PERMIT

Preliminary Draft for Agency Review

TEMPORARY WORK BRIDGE

AGENCY REF. NO.:
PROJECT: BNSF / SANDPOINT JUNCTION CONNECTOR BRIDGE 3.9
OWNER: BNSF RAILWAY COMPANY
CONSULTANT: JACOBS ENGINEERING GROUP
LOCATION: BNSF BRIDGE 3.9 MONTANA DIVISION, KOOTENAI RIVER SUB, LINE SEGMENT 45, MP 3.9
MILE POINT OF BRIDGE LOCATION FROM MOUTH: 2.7
WATERWAY: LAKE PEND OREILLE
CITY: SANDPOINT **COUNTY:** BONNER **STATE:** IDAHO
DATE: 08/17/2018

8/17/2018 2:10:21 PM $USER$
P:\W3X76600\6000ISC\620DESIGN\JARPA\SPJ_CG_BR3-9_Temp_Elev-North Abutment.dgn

USCG0012353/27

ELEVATION VIEW - 2 DEFINED TEMPORARY NAVIGATIONAL CHANNEL PROFILE

TEMPORARY WORK BRIDGE 3.9

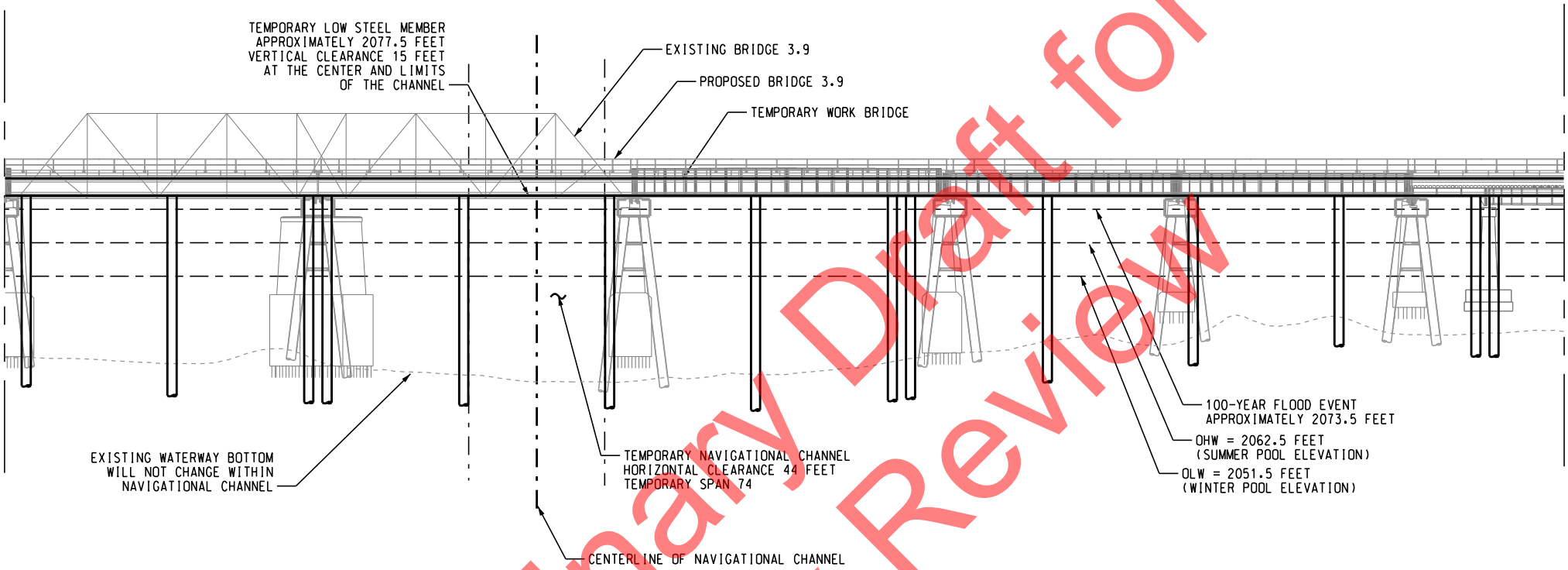

25' 0 25' 50'

APPROX. GRAPHIC SCALE: 1" = 50'

BASED ON: HANSON PROFESSIONAL SERVICES, INC. PRELIMINARY PLANS. ELEVATIONS ARE RELATIVE TO NAVD88. CONCEPTUAL PLANS UTILIZED TO OBTAIN U.S. COAST GUARD BRIDGE PERMIT

LEGEND

- - — - — LIMITS OF NAVIGATIONAL CHANNEL

- - — - — CENTERLINE OF NAVIGATIONAL CHANNEL

TEMPORARY WORK BRIDGE

AGENCY REF. NO.:
PROJECT: BNSF / SANDPOINT JUNCTION CONNECTOR BRIDGE 3.9
OWNER: BNSF RAILWAY COMPANY
CONSULTANT: JACOBS ENGINEERING GROUP
LOCATION: BNSF BRIDGE 3.9 MONTANA DIVISION, KOOTENAI RIVER SUB, LINE SEGMENT 45, MP 3.9
MILE POINT OF BRIDGE LOCATION FROM MOUTH: 2.7
WATERWAY: LAKE PEND OREILLE
CITY: SANDPOINT **COUNTY:** BONNER **STATE:** IDAHO
DATE: 08/17/2018

Preliminary Draft for Agency Review

8/17/2018 1:59:57 PM $USER$
P:\W3X76600\6000ISC\620DESIGN\JARPA\SPJ_CG_BR3-9_Temp_Elev-Nav Chan-Alt.dgn

USCG0012363/27

ELEVATION VIEW - 3 TEMPORARY NEARSHORE FILL, SOUTH END

TEMPORARY WORK BRIDGE 3.9

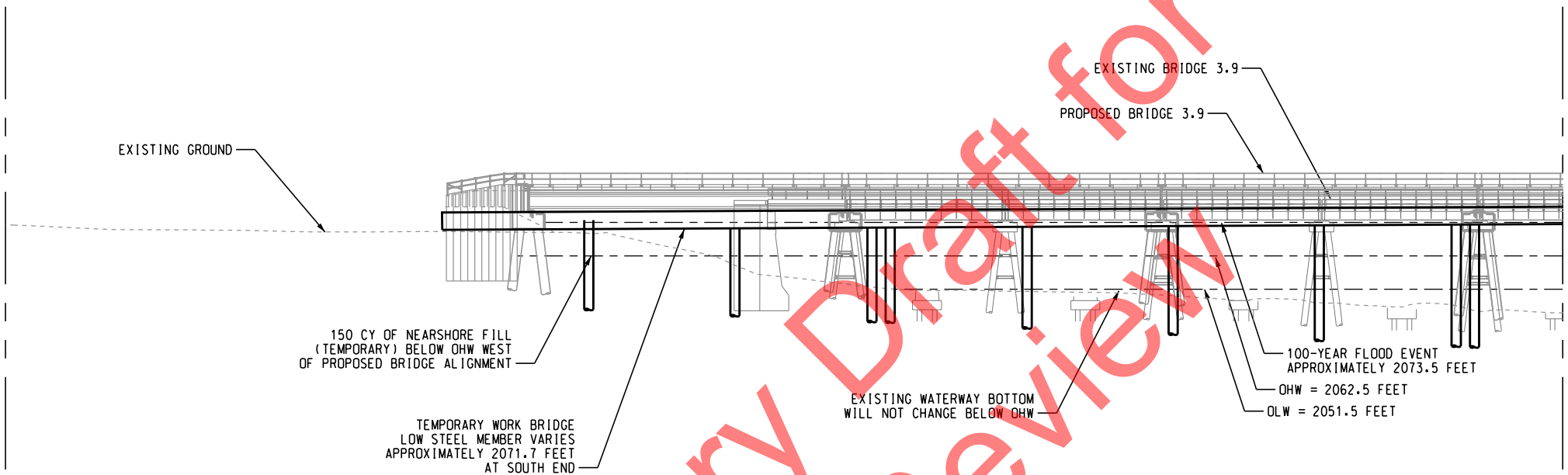

25' 0 25' 50'

APPROX. GRAPHIC SCALE: 1" = 50'

BASED ON: HANSON PROFESSIONAL SERVICES, INC. PRELIMINARY PLANS. ELEVATIONS ARE RELATIVE TO NAVD88. CONCEPTUAL PLANS UTILIZED TO OBTAIN U.S. COAST GUARD BRIDGE PERMIT

Preliminary Draft for Agency Review

TEMPORARY WORK BRIDGE

AGENCY REF. NO.:
PROJECT: BNSF / SANDPOINT JUNCTION CONNECTOR BRIDGE 3.9
OWNER: BNSF RAILWAY COMPANY
CONSULTANT: JACOBS ENGINEERING GROUP
LOCATION: BNSF BRIDGE 3.9 MONTANA DIVISION, KOOTENAI RIVER SUB, LINE SEGMENT 45, MP 3.9
MILE POINT OF BRIDGE LOCATION FROM MOUTH: 2.7
WATERWAY: LAKE PEND OREILLE
CITY: SANDPOINT **COUNTY:** BONNER **STATE:** IDAHO
DATE: 08/17/2018

8/17/2018 3:13:16 PM $USER$
P:\W3X76600\6000DSC\6200ESIGN\JARPA\SPJ_CG_BR3-9_Temp_Elev-South Abutment.dgn

USCG0012373/27

TYPICAL SECTION VIEW

TEMPORARY WORK BRIDGE 3.9

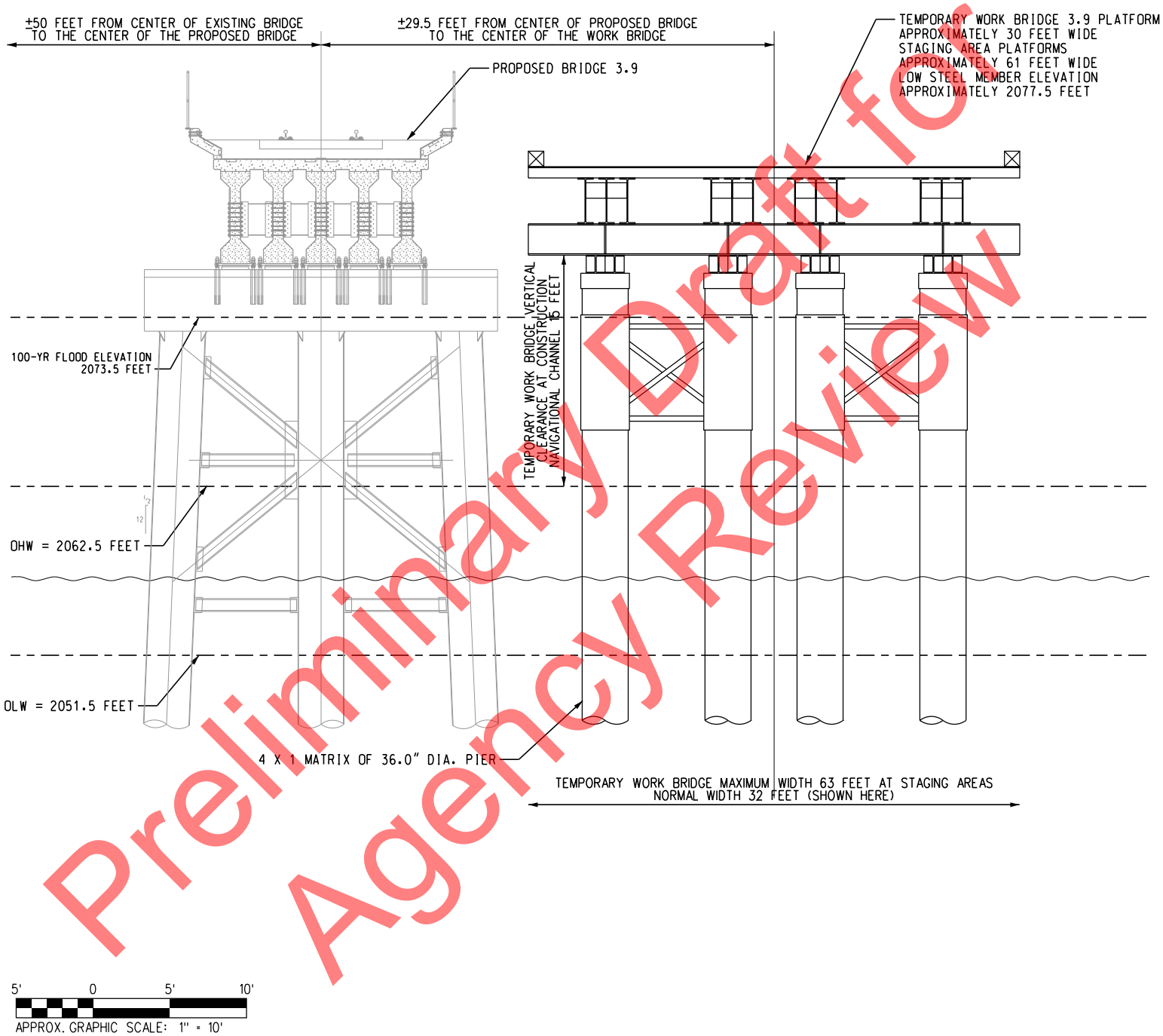

Preliminary Draft for Agency Review

BASED ON: HANSON PROFESSIONAL SERVICES, INC. PRELIMINARY PLANS. ELEVATIONS ARE RELATIVE TO NAVD88. CONCEPTUAL PLANS UTILIZED TO OBTAIN U.S. COAST GUARD BRIDGE PERMIT

TEMPORARY WORK BRIDGE

AGENCY REF. NO.:
PROJECT: BNSF / SANDPOINT JUNCTION CONNECTOR BRIDGE 3.9
OWNER: BNSF RAILWAY COMPANY
CONSULTANT: JACOBS ENGINEERING GROUP
LOCATION: BNSF BRIDGE 3.9 MONTANA DIVISION, KOOTENAI RIVER SUB, LINE SEGMENT 45, MP 3.9
MILE POINT OF BRIDGE LOCATION FROM MOUTH: 2.7
WATERWAY: LAKE PEND OREILLE
CITY: SANDPOINT **COUNTY:** BONNER **STATE:** IDAHO
DATE: 08/17/2018

8/17/2018 3:10:11 PM $USER$
P:\W3X76600\6000DISC\6200ESIGN\JARPA\SPJ_CG_BR3-9_Temp_Typical XS.dgn

PROPOSED PERMANENT BRIDGE 3.1

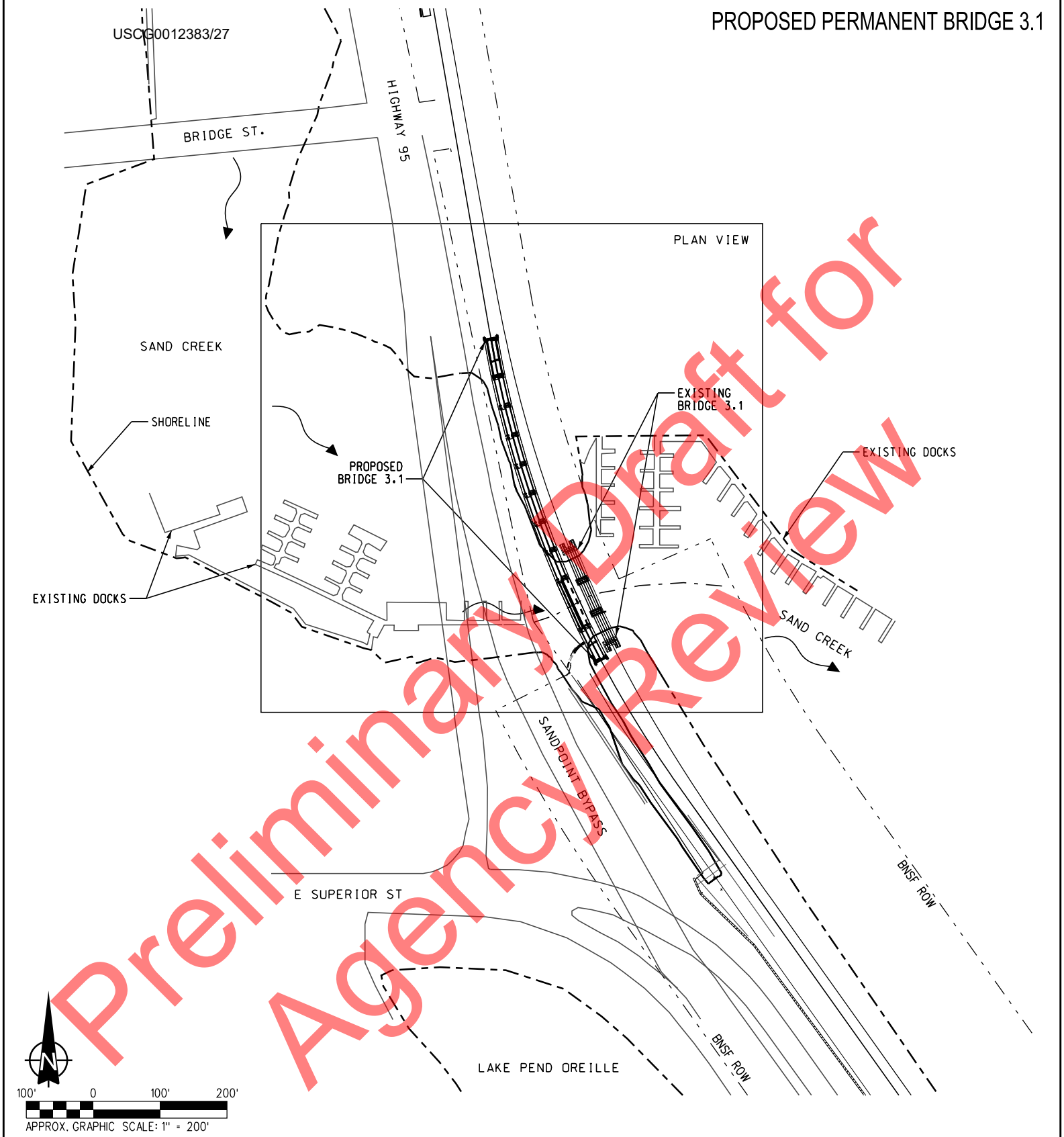

Preliminary Draft for Agency Review

BASED ON: HANSON PROFESSIONAL SERVICES, INC. PRELIMINARY PLANS. ELEVATIONS ARE RELATIVE TO NAVD88. CONCEPTUAL PLANS UTILIZED TO OBTAIN COAST GUARD BRIDGE PERMIT

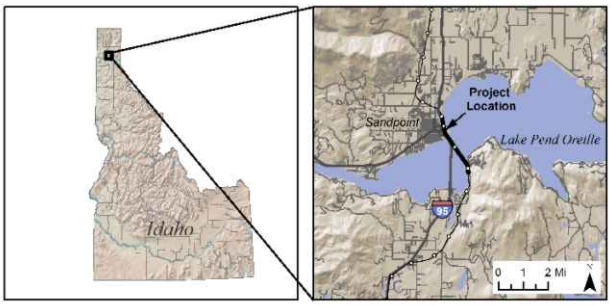

LOCATION / VICINITY MAP

AGENCY REF. NO.:
PROJECT: BNSF / SANDPOINT JUNCTION CONNECTOR BRIDGE 3.1
OWNER: BNSF RAILWAY COMPANY
CONSULTANT: JACOBS ENGINEERING GROUP
LOCATION: BNSF BRIDGE 3.1 MONTANA DIVISION, KOOTENAI RIVER SUB, LINE SEGMENT 45, MP 3.1
MILE POINT OF BRIDGE LOCATION FROM MOUTH: 0.1
WATERWAY: SAND CREEK
CITY: SANDPOINT **COUNTY:** BONNER **STATE:** IDAHO
DATE: 08/07/2018

8/14/2018 2:45:19 PM $USER$
P:\W3X76600\600DISC\620DESIGN\JARPA\SPJ_CG_BR3-1_Vicinity.dgn

USCG0012393/27

PLAN VIEW

PROPOSED PERMANENT BRIDGE 3.1

SAMPLE DEPTHS	
NAME	OLW DEPTH (FEET)
D-1	3.2
D-2	4.2
D-3	6.5

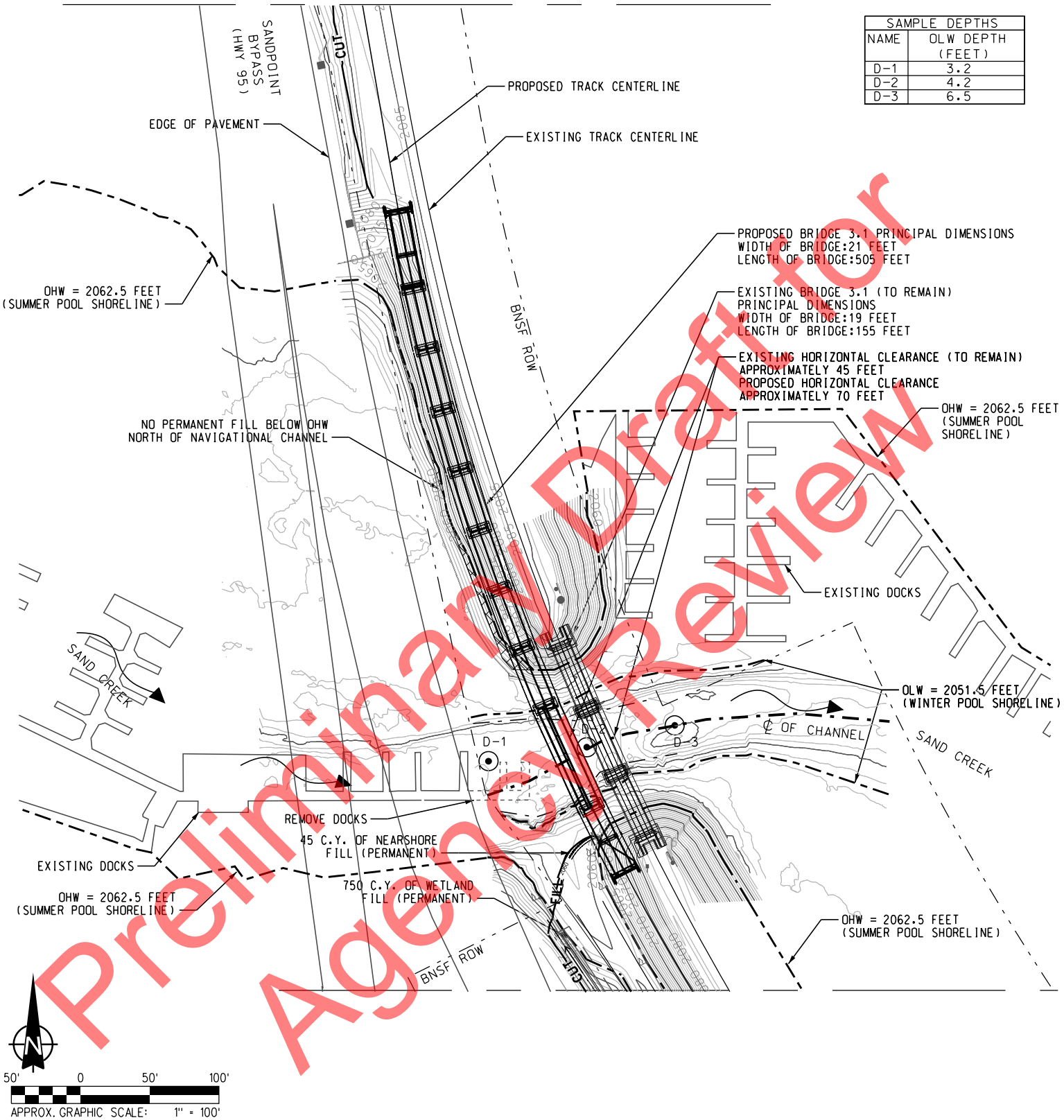

Preliminary Draft for Agency Review

BASED ON: HANSON PROFESSIONAL SERVICES, INC. PRELIMINARY PLANS. ELEVATIONS ARE RELATIVE TO NAVD88. CONCEPTUAL PLANS UTILIZED TO OBTAIN COAST GUARD BRIDGE PERMIT

LEGEND

- BNSF RIGHT-OF-WAY (ROW)
- SHORELINE (SUMMER AND WINTER POOL)
- CENTERLINE OF NAVIGATIONAL CHANNEL
- LIMITS OF NAVIGATIONAL CHANNEL
- STRUCTURE (ROADS, DOCKS)

EXISTING CONDITIONS / PROPOSED WORK

AGENCY REF. NO.:
PROJECT: BNSF / SANDPOINT JUNCTION CONNECTOR BRIDGE 3.1
OWNER: BNSF RAILWAY COMPANY
CONSULTANT: JACOBS ENGINEERING GROUP
LOCATION: BNSF BRIDGE 3.1 MONTANA DIVISION, KOOTENAI RIVER SUB, LINE SEGMENT 45, MP 3.1
MILE POINT OF BRIDGE LOCATION FROM MOUTH: 0.1
WATERWAY: SAND CREEK
CITY: SANDPOINT **COUNTY:** BONNER **STATE:** IDAHO
DATE: 08/07/2018

8/14/2018 2:50:14 PM NUSHIN
P:\W3076600\600DSC\620DESIGN\JARPA\SPJ_CG_BR3-1_RS-06.dgn

USCG0012403/27

ELEVATION VIEW

PROPOSED PERMANENT BRIDGE 3.1

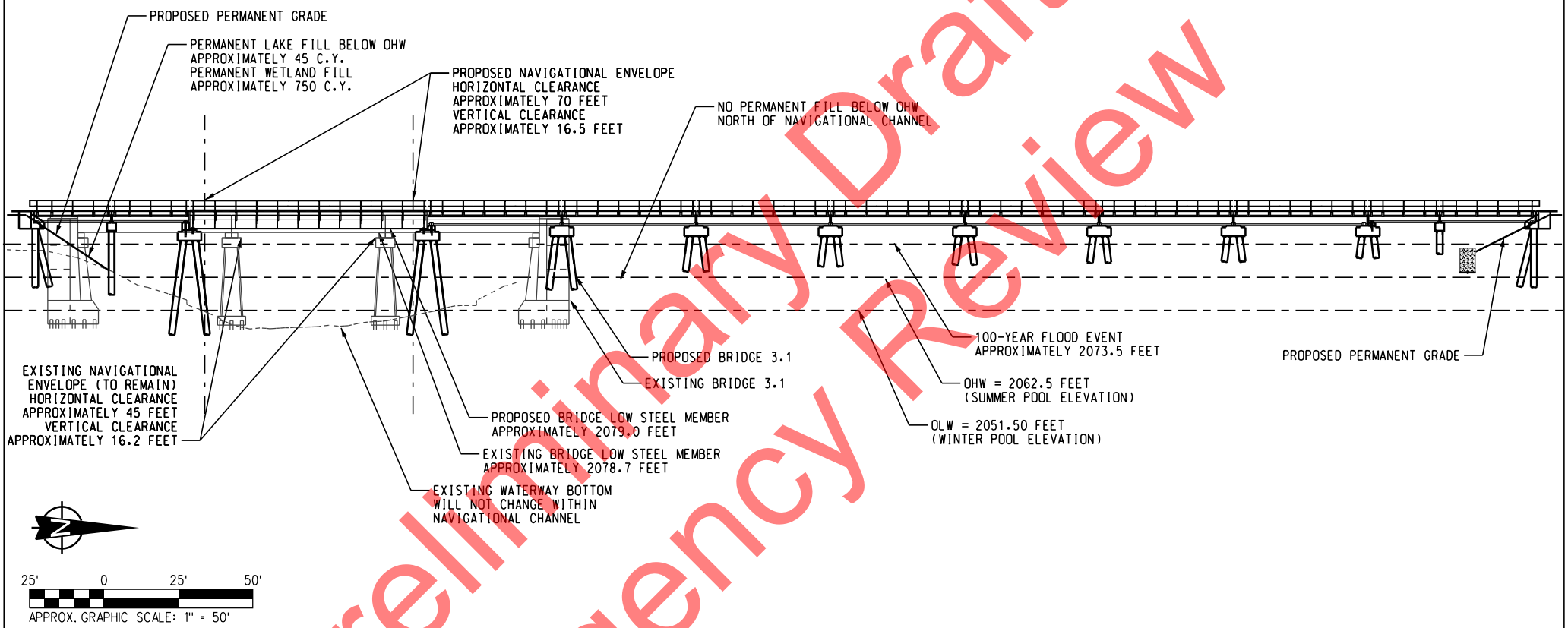

BASED ON: HANSON PROFESSIONAL SERVICES, INC. PRELIMINARY PLANS. ELEVATIONS ARE RELATIVE TO NAVD88. CONCEPTUAL PLANS UTILIZED TO OBTAIN COAST GUARD BRIDGE PERMIT

LEGEND

- - — - — SHORELINE (SUMMER AND WINTER POOL; 100-YEAR FLOOD)

- - — - — LIMITS OF NAVIGATIONAL CHANNEL

EXISTING CONDITIONS / PROPOSED WORK

AGENCY REF. NO.:
PROJECT: BNSF / SANDPOINT JUNCTION CONNECTOR BRIDGE 3.1
OWNER: BNSF RAILWAY COMPANY
CONSULTANT: JACOBS ENGINEERING GROUP
LOCATION: BNSF BRIDGE 3.1 MONTANA DIVISION, KOOTENAI RIVER SUB, LINE SEGMENT 45, MP 3.1
MILE POINT OF BRIDGE LOCATION FROM MOUTH: 0.1
WATERWAY: SAND CREEK
CITY: SANDPOINT **COUNTY:** BONNER **STATE:** IDAHO
DATE: 08/07/2018

Preliminary Draft for Agency Review

8/14/2018 2:52:04 PM $USER$
P:\M3X76600\600DISC\620DESIGN\JARPA\SPJ_CG_BR3-1_Elev.dgn

USCG0012413/27

TYPICAL SECTION VIEW

PROPOSED PERMANENT BRIDGE 3.1

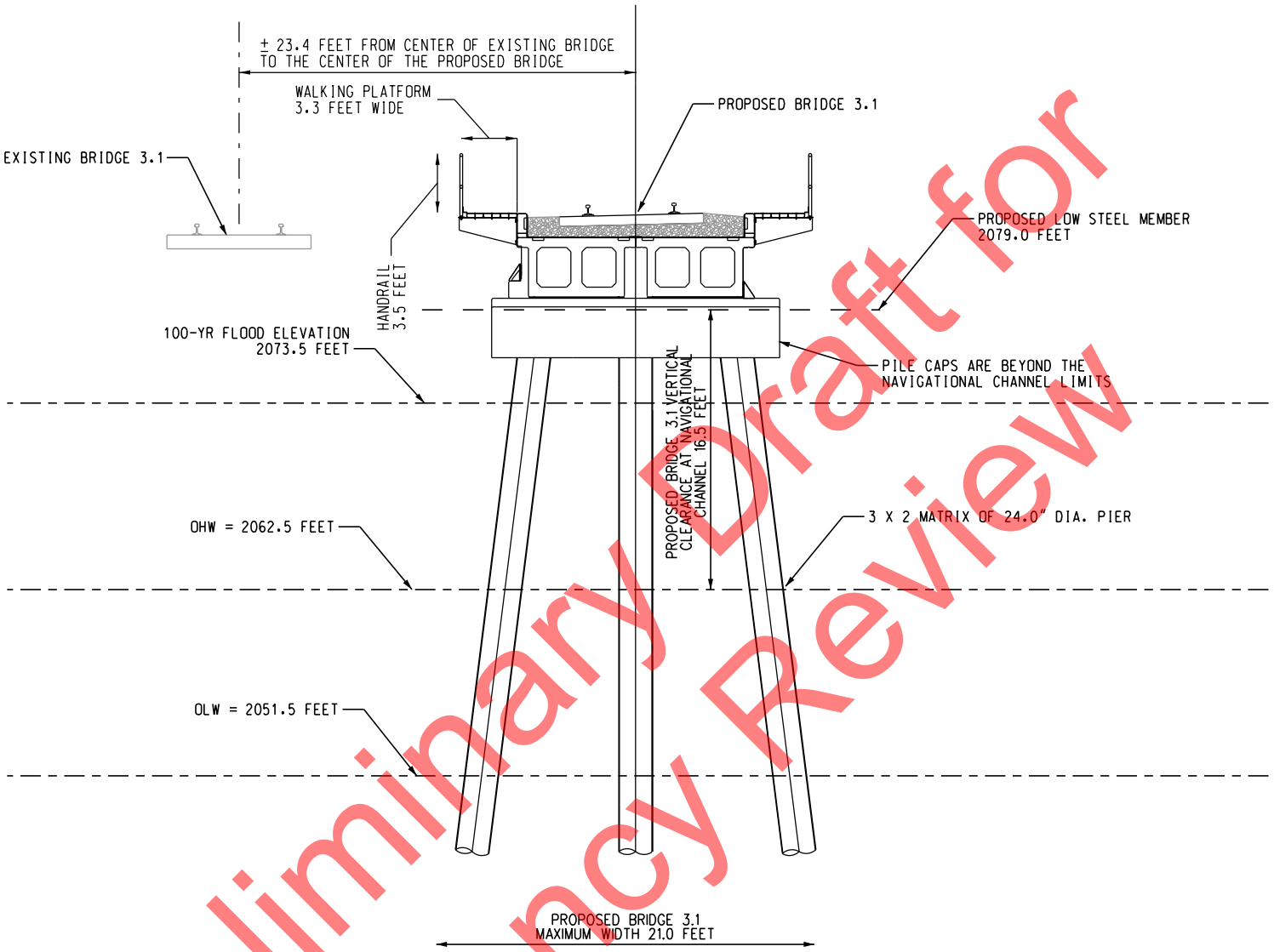

Preliminary Draft for Agency Review

5' 0 5' 10'

APPROX. GRAPHIC SCALE: 1" = 10'

BASED ON: HANSON PROFESSIONAL SERVICES, INC. PRELIMINARY PLANS. ELEVATIONS ARE RELATIVE TO NAVD88. CONCEPTUAL PLANS UTILIZED TO OBTAIN COAST GUARD BRIDGE PERMIT

EXISTING CONDITIONS / PROPOSED WORK

AGENCY REF. NO.:
PROJECT: BNSF / SANDPOINT JUNCTION CONNECTOR BRIDGE 3.1
OWNER: BNSF RAILWAY COMPANY
CONSULTANT: JACOBS ENGINEERING GROUP
LOCATION: BNSF BRIDGE 3.1 MONTANA DIVISION, KOOTENAI RIVER SUB, LINE SEGMENT 45, MP 3.1
MILE POINT OF BRIDGE LOCATION FROM MOUTH: 0.1
WATERWAY: SAND CREEK
CITY: SANDPOINT **COUNTY:** BONNER **STATE:** IDAHO
DATE: 08/07/2018

8/14/2018 12:21:44 PM BLDA1KB
P:\N\BX7860\600DSG\620DESIGN\JAPA\SP-L_CG_BR3-1_Typical XS.dgn

PROPOSED PERMANENT BRIDGE 3.9

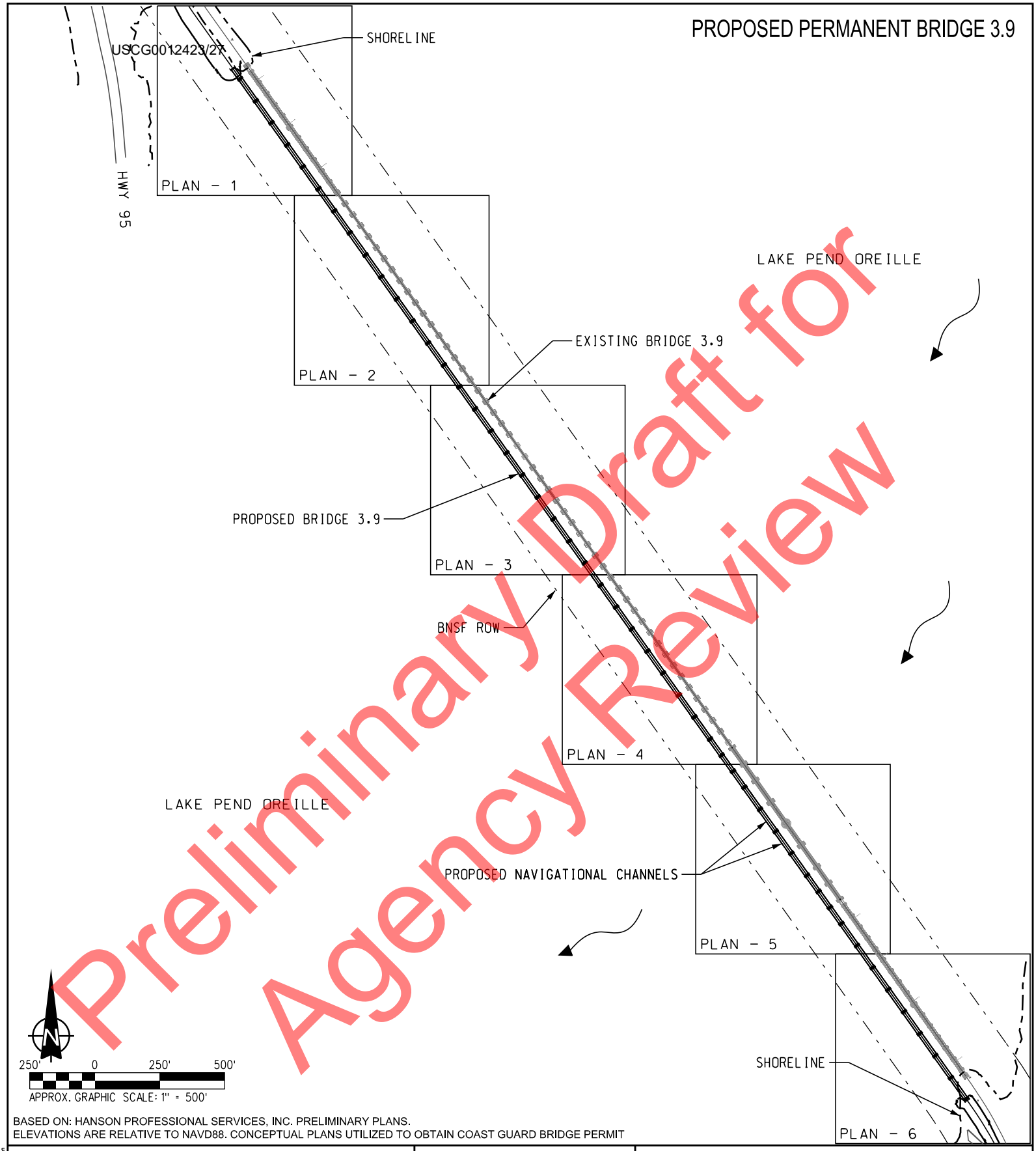

Preliminary Draft for Agency Review

BASED ON: HANSON PROFESSIONAL SERVICES, INC. PRELIMINARY PLANS.
ELEVATIONS ARE RELATIVE TO NAVD88. CONCEPTUAL PLANS UTILIZED TO OBTAIN COAST GUARD BRIDGE PERMIT

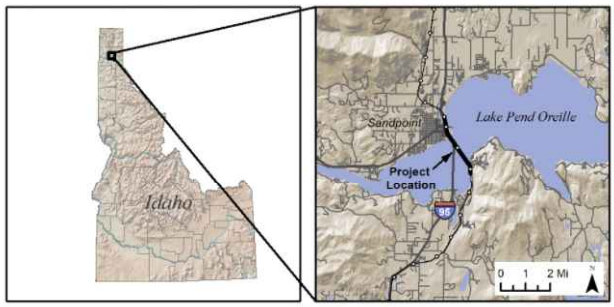

VICINITY / LOCATION MAP

AGENCY REF. NO.:
PROJECT: BNSF / SANDPOINT JUNCTION CONNECTOR BRIDGE 3.9
OWNER: BNSF RAILWAY COMPANY
CONSULTANT: JACOBS ENGINEERING GROUP
LOCATION: BNSF BRIDGE 3.9 MONTANA DIVISION, KOOTENAI RIVER SUB, LINE SEGMENT 45, MP 3.9
MILE POINT OF BRIDGE LOCATION FROM MOUTH: 2.7
WATERWAY: LAKE PEND OREILLE
CITY: SANDPOINT **COUNTY:** BONNER **STATE:** IDAHO
DATE: 08/17/2018

8/17/2018 2:30:04 PM $USER$
P:\W3X76600\6000ISC\6200ESIGN\JARPA\SPJ_CG_BR3-9_Vicinity.dgn

USCG0012433/27

PLAN VIEW - 1

PROPOSED PERMANENT BRIDGE 3.9

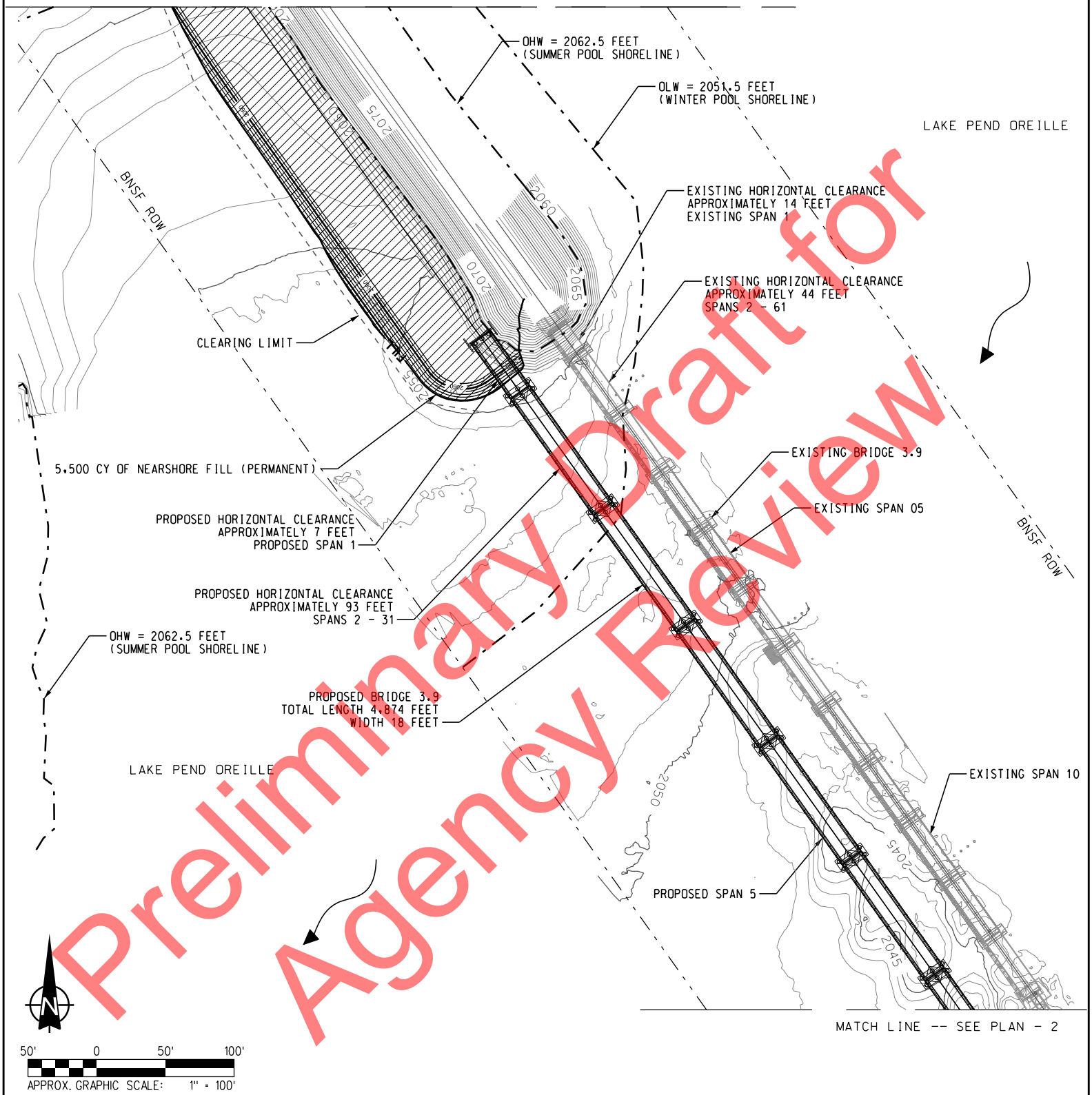

Preliminary Draft for Agency Review

BASED ON: HANSON PROFESSIONAL SERVICES, INC. PRELIMINARY PLANS. ELEVATIONS ARE RELATIVE TO NAVD88. CONCEPTUAL PLANS UTILIZED TO OBTAIN U.S. COAST GUARD BRIDGE PERMIT

LEGEND

- BNSF RIGHT-OF-WAY (ROW)
- SHORELINE (SUMMER AND WINTER POOL)
- STRUCTURE (ROADS, DOCKS)
- CLEARING LIMITS

EXISTING CONDITIONS / PROPOSED WORK

AGENCY REF. NO.:
PROJECT: BNSF / SANDPOINT JUNCTION CONNECTOR BRIDGE 3.9
OWNER: BNSF RAILWAY COMPANY
CONSULTANT: JACOBS ENGINEERING GROUP
LOCATION: BNSF BRIDGE 3.9 MONTANA DIVISION, KOOTENAI RIVER SUB, LINE SEGMENT 45, MP 3.9
MILE POINT OF BRIDGE LOCATION FROM MOUTH: 2.7
WATERWAY: LAKE PEND OREILLE
CITY: SANDPOINT **COUNTY:** BONNER **STATE:** IDAHO
DATE: 08/17/2018

8/17/2018 2:24:27 PM
P:\W3X76600\600DISC\620DESIGN\JARPA\SPJ_CG_BR3-9_RS-10.dgn

PLAN VIEW - 2

PROPOSED PERMANENT BRIDGE 3.9

Preliminary Draft for Agency Review

BASED ON: HANSON PROFESSIONAL SERVICES, INC. PRELIMINARY PLANS. ELEVATIONS ARE RELATIVE TO NAVD88. CONCEPTUAL PLANS UTILIZED TO OBTAIN U.S. COAST GUARD BRIDGE PERMIT

LEGEND

— - - — - BNSF RIGHT-OF-WAY (ROW)

EXISTING CONDITIONS / PROPOSED WORK

AGENCY REF. NO.:
PROJECT: BNSF / SANDPOINT JUNCTION CONNECTOR BRIDGE 3.9
OWNER: BNSF RAILWAY COMPANY
CONSULTANT: JACOBS ENGINEERING GROUP
LOCATION: BNSF BRIDGE 3.9 MONTANA DIVISION, KOOTENAI RIVER SUB, LINE SEGMENT 45, MP 3.9
MILE POINT OF BRIDGE LOCATION FROM MOUTH: 2.7
WATERWAY: LAKE PEND OREILLE
CITY: SANDPOINT **COUNTY:** BONNER **STATE:** IDAHO
DATE: 08/17/2018

8/17/2018 2:25:10 PM $USER$
P:\W3X76600\6000DISC\6200ESIGN\JARPA\SPJ_CG_BR3-9_RS-11.dgn

PLAN VIEW - 3

PROPOSED PERMANENT BRIDGE 3.9

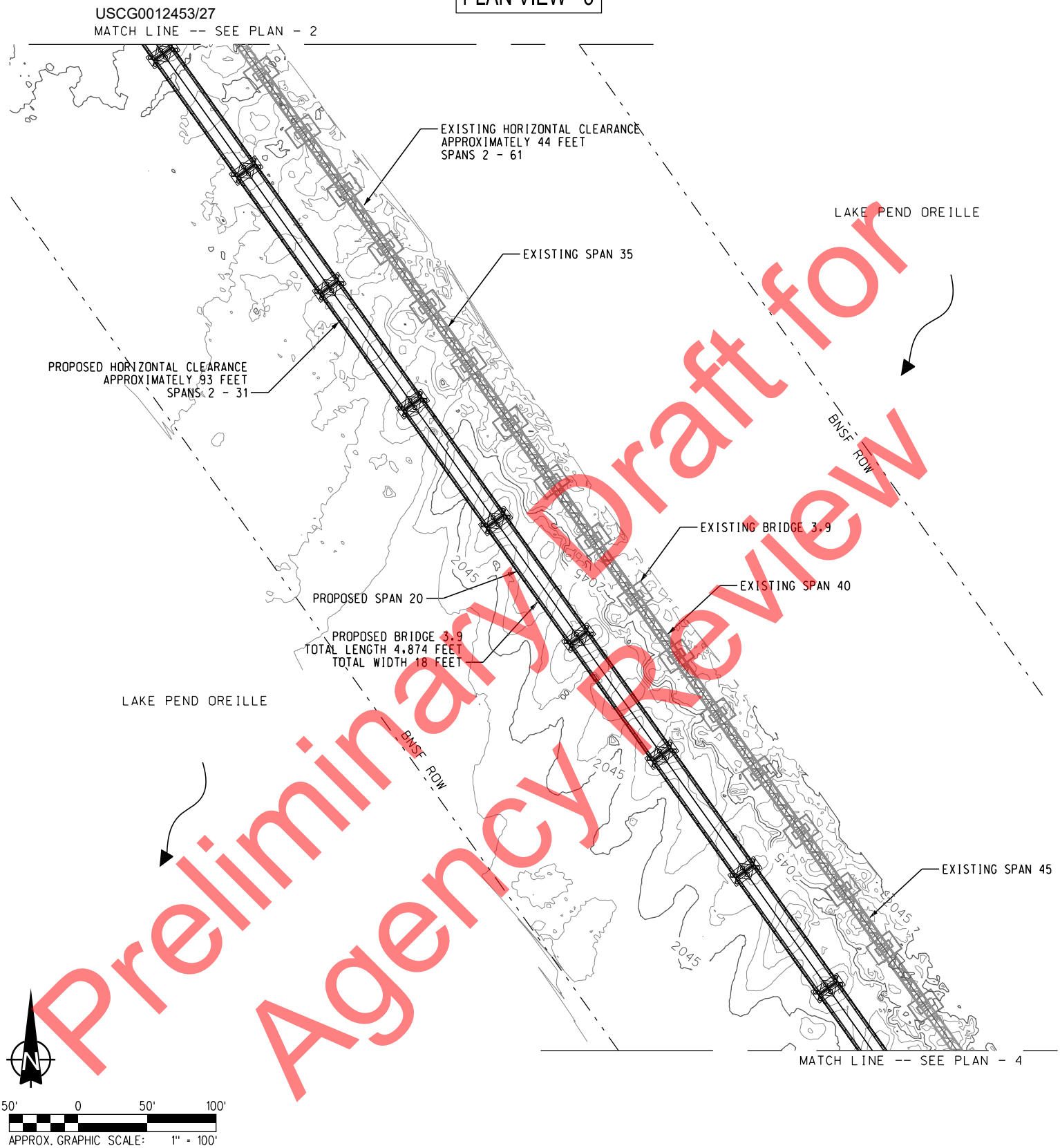

Preliminary Draft for Agency Review

BASED ON: HANSON PROFESSIONAL SERVICES, INC. PRELIMINARY PLANS. ELEVATIONS ARE RELATIVE TO NAVD88. CONCEPTUAL PLANS UTILIZED TO OBTAIN U.S. COAST GUARD BRIDGE PERMIT

LEGEND

— - - — - BNSF RIGHT-OF-WAY (ROW)

EXISTING CONDITIONS / PROPOSED WORK

AGENCY REF. NO.:
PROJECT: BNSF / SANDPOINT JUNCTION CONNECTOR BRIDGE 3.9
OWNER: BNSF RAILWAY COMPANY
CONSULTANT: JACOBS ENGINEERING GROUP
LOCATION: BNSF BRIDGE 3.9 MONTANA DIVISION, KOOTENAI RIVER SUB, LINE SEGMENT 45, MP 3.9
MILE POINT OF BRIDGE LOCATION FROM MOUTH: 2.7
WATERWAY: LAKE PEND OREILLE
CITY: SANDPOINT **COUNTY:** BONNER **STATE:** IDAHO
DATE: 08/17/2018

8/17/2018 2:25:49 PM MUSA-HS
P:\W3X7860\600DGS\62\DESIGN\JARPA\SP-J_CG_BR3-9_RS-12.dgn

PLAN VIEW - 4

PROPOSED PERMANENT BRIDGE 3.9

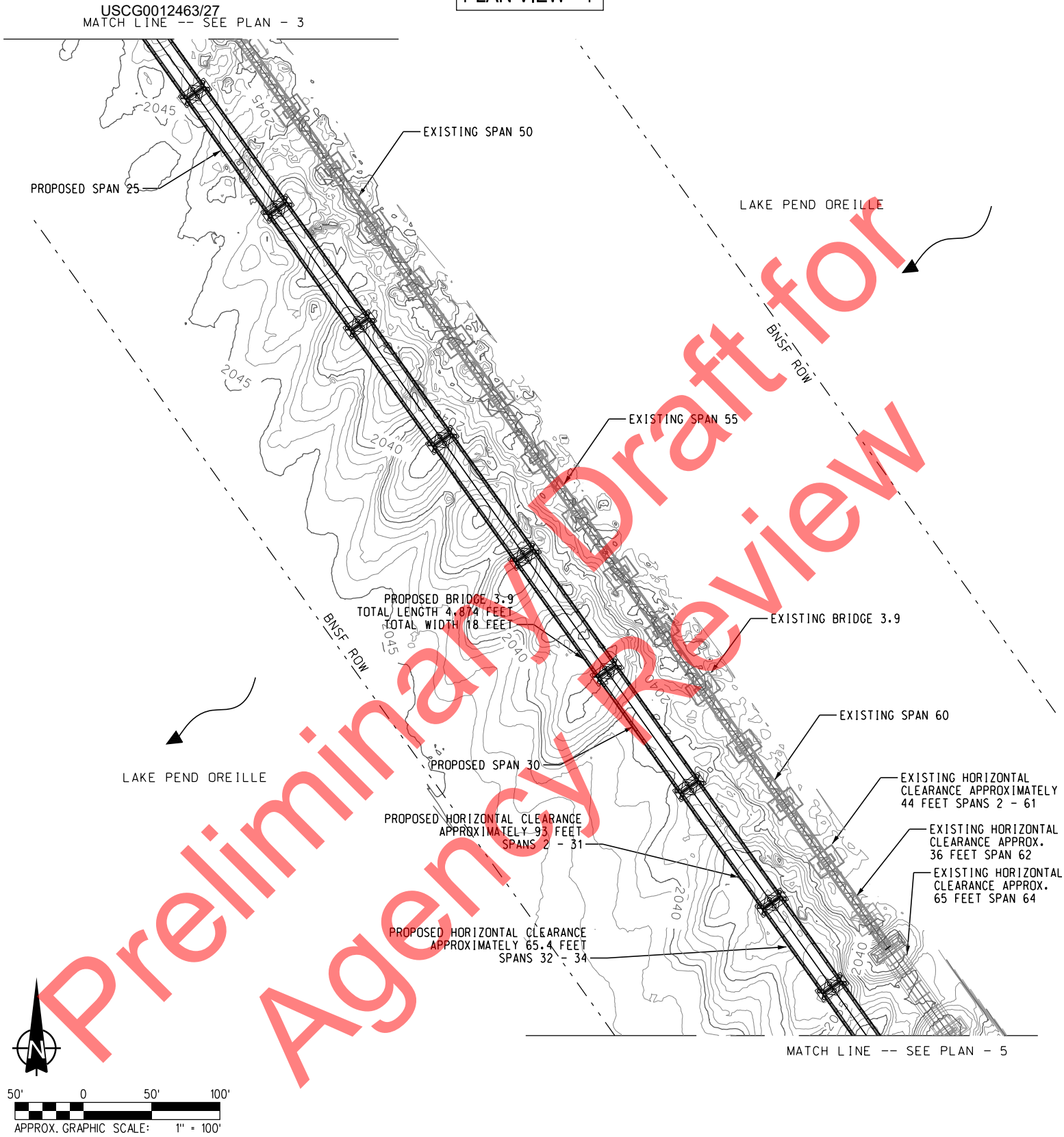

Preliminary Draft for Agency Review

BASED ON: HANSON PROFESSIONAL SERVICES, INC. PRELIMINARY PLANS. ELEVATIONS ARE RELATIVE TO NAVD88. CONCEPTUAL PLANS UTILIZED TO OBTAIN U.S. COAST GUARD BRIDGE PERMIT

LEGEND

— - - — - BNSF RIGHT-OF-WAY (ROW)

EXISTING CONDITIONS / PROPOSED WORK

AGENCY REF. NO.:
PROJECT: BNSF / SANDPOINT JUNCTION CONNECTOR BRIDGE 3.9
OWNER: BNSF RAILWAY COMPANY
CONSULTANT: JACOBS ENGINEERING GROUP
LOCATION: BNSF BRIDGE 3.9 MONTANA DIVISION, KOOTENAI RIVER SUB, LINE SEGMENT 45, MP 3.9
MILE POINT OF BRIDGE LOCATION FROM MOUTH: 2.7
WATERWAY: LAKE PEND OREILLE
CITY: SANDPOINT **COUNTY:** BONNER **STATE:** IDAHO
DATE: 08/17/2018

8/17/2018 2:22:49 PM MJOHNS
P:\W3276600\600DSC\620DESIGN\JARPA\SPJ_CG_BR3-9_R5-15.dgn

PLAN VIEW - 5

PROPOSED PERMANENT BRIDGE 3.9

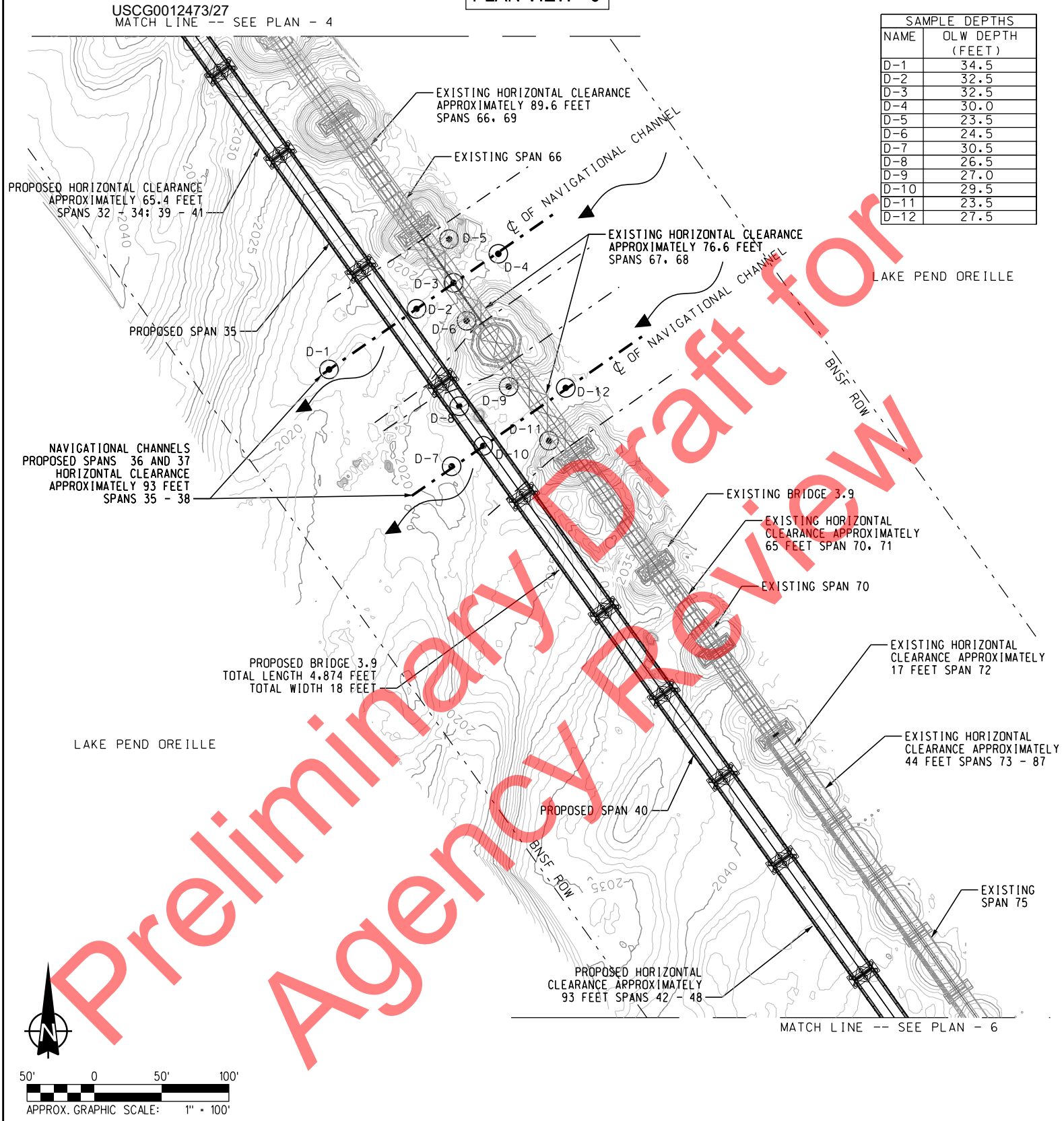

SAMPLE DEPTHS	
NAME	OLW DEPTH (FEET)
D-1	34.5
D-2	32.5
D-3	32.5
D-4	30.0
D-5	23.5
D-6	24.5
D-7	30.5
D-8	26.5
D-9	27.0
D-10	29.5
D-11	23.5
D-12	27.5

Preliminary Draft for Agency Review

BASED ON: HANSON PROFESSIONAL SERVICES, INC. PRELIMINARY PLANS. ELEVATIONS ARE RELATIVE TO NAVD88. CONCEPTUAL PLANS UTILIZED TO OBTAIN U.S. COAST GUARD BRIDGE PERMIT

LEGEND

- BNSF RIGHT-OF-WAY (ROW)
- SHORELINE (SUMMER AND WINTER POOL)
- CENTERLINE OF NAVIGATIONAL CHANNEL
- LIMITS OF NAVIGATIONAL CHANNEL

EXISTING CONDITIONS / PROPOSED WORK

AGENCY REF. NO.:
PROJECT: BNSF / SANDPOINT JUNCTION CONNECTOR BRIDGE 3.9
OWNER: BNSF RAILWAY COMPANY
CONSULTANT: JACOBS ENGINEERING GROUP
LOCATION: BNSF BRIDGE 3.9 MONTANA DIVISION, KOOTENAI RIVER SUB, LINE SEGMENT 45, MP 3.9
MILE POINT OF BRIDGE LOCATION FROM MOUTH: 2.7
WATERWAY: LAKE PEND OREILLE
CITY: SANDPOINT **COUNTY:** BONNER **STATE:** IDAHO
DATE: 08/17/2018

8/17/2018 2:52:32 PM $USER$
P:\W3X76600\6000ISC\620DESIGN\JARPA\SPJ_CG_BR3-9_RS-14.dgn

USCG0012483/27

PLAN VIEW - 6

PROPOSED PERMANENT BRIDGE 3.9

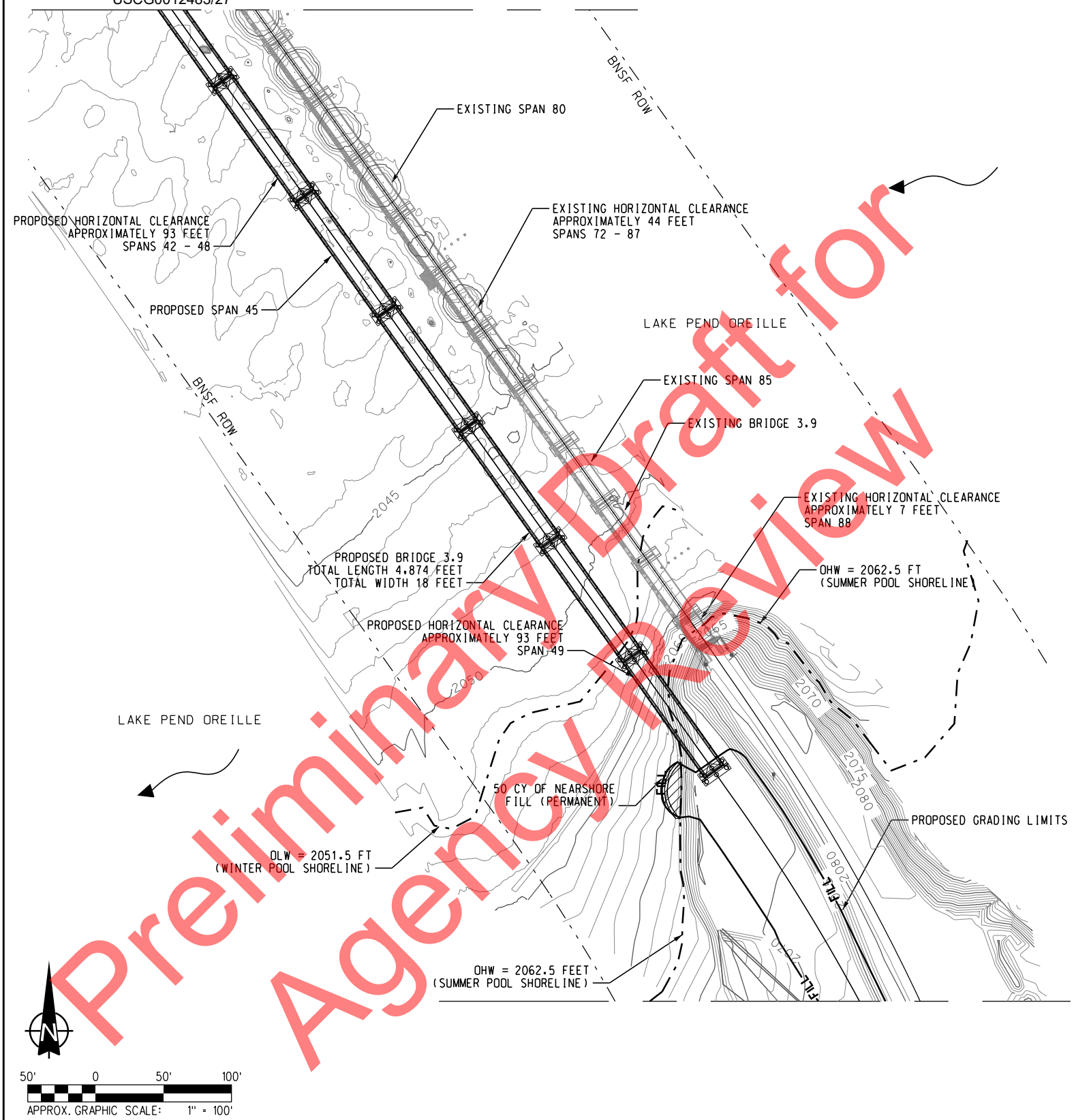

Preliminary Draft for Agency Review

BASED ON: HANSON PROFESSIONAL SERVICES, INC. PRELIMINARY PLANS. ELEVATIONS ARE RELATIVE TO NAVD88. CONCEPTUAL PLANS UTILIZED TO OBTAIN U.S. COAST GUARD BRIDGE PERMIT

LEGEND

- BNSF RIGHT-OF-WAY (ROW)
- SHORELINE (SUMMER AND WINTER POOL)
- STRUCTURE (ROADS, DOCKS)

EXISTING CONDITIONS / PROPOSED WORK

AGENCY REF. NO.:
PROJECT: BNSF / SANDPOINT JUNCTION CONNECTOR BRIDGE 3.9
OWNER: BNSF RAILWAY COMPANY
CONSULTANT: JACOBS ENGINEERING GROUP
LOCATION: BNSF BRIDGE 3.9 MONTANA DIVISION, KOOTENAI RIVER SUB, LINE SEGMENT 45, MP 3.9
MILE POINT OF BRIDGE LOCATION FROM MOUTH: 2.7
WATERWAY: LAKE PEND OREILLE
CITY: SANDPOINT **COUNTY:** BONNER **STATE:** IDAHO
DATE: 08/17/2018

8/17/2018 2:50:30 PM $USER$
P:\W3X76600\600DISC\620DESIGN\JARPA\SPJ_CG_BR3-9_RS-15.dgn

USCG0012493/27

ELEVATION VIEW - 1 NORTH ABUTMENT

PROPOSED PERMANENT BRIDGE 3.9

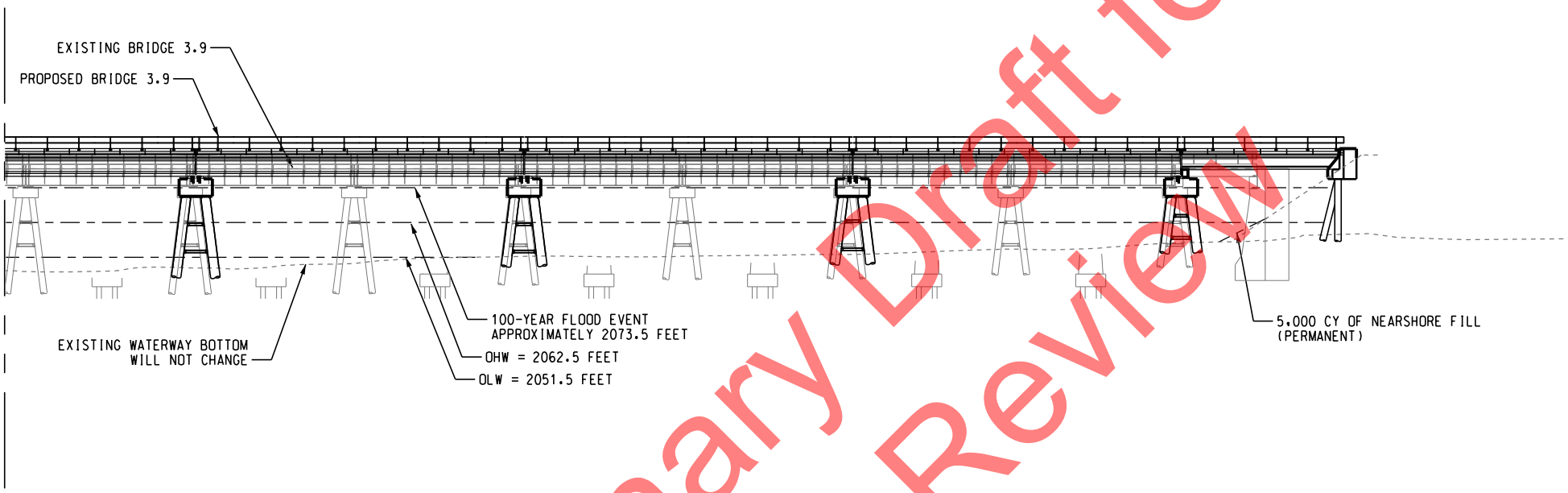

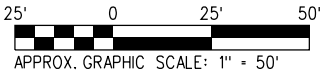

BASED ON: HANSON PROFESSIONAL SERVICES, INC. PRELIMINARY PLANS. ELEVATIONS ARE RELATIVE TO NAVD88. CONCEPTUAL PLANS UTILIZED TO OBTAIN U.S. COAST GUARD BRIDGE PERMIT

Preliminary Draft for Agency Review

EXISTING CONDITIONS / PROPOSED WORK

AGENCY REF. NO.:
PROJECT: BNSF / SANDPOINT JUNCTION CONNECTOR BRIDGE 3.9
OWNER: BNSF RAILWAY COMPANY
CONSULTANT: JACOBS ENGINEERING GROUP
LOCATION: BNSF BRIDGE 3.9 MONTANA DIVISION, KOOTENAI RIVER SUB, LINE SEGMENT 45, MP 3.9
MILE POINT OF BRIDGE LOCATION FROM MOUTH: 2.7
WATERWAY: LAKE PEND OREILLE
CITY: SANDPOINT **COUNTY:** BONNER **STATE:** IDAHO
DATE: 08/17/2018

8/17/2018 2:54:24 PM $USER$
P:\W3X76600\600DISC\620DESIGN\JARPA\SPJ_CG_BR3-9_Elev-North Abutment.dgn

USCG0012503/27

ELEVATION VIEW - 2 DEFINED NAVIGATIONAL CHANNEL PROFILE

PROPOSED PERMANENT BRIDGE 3.9

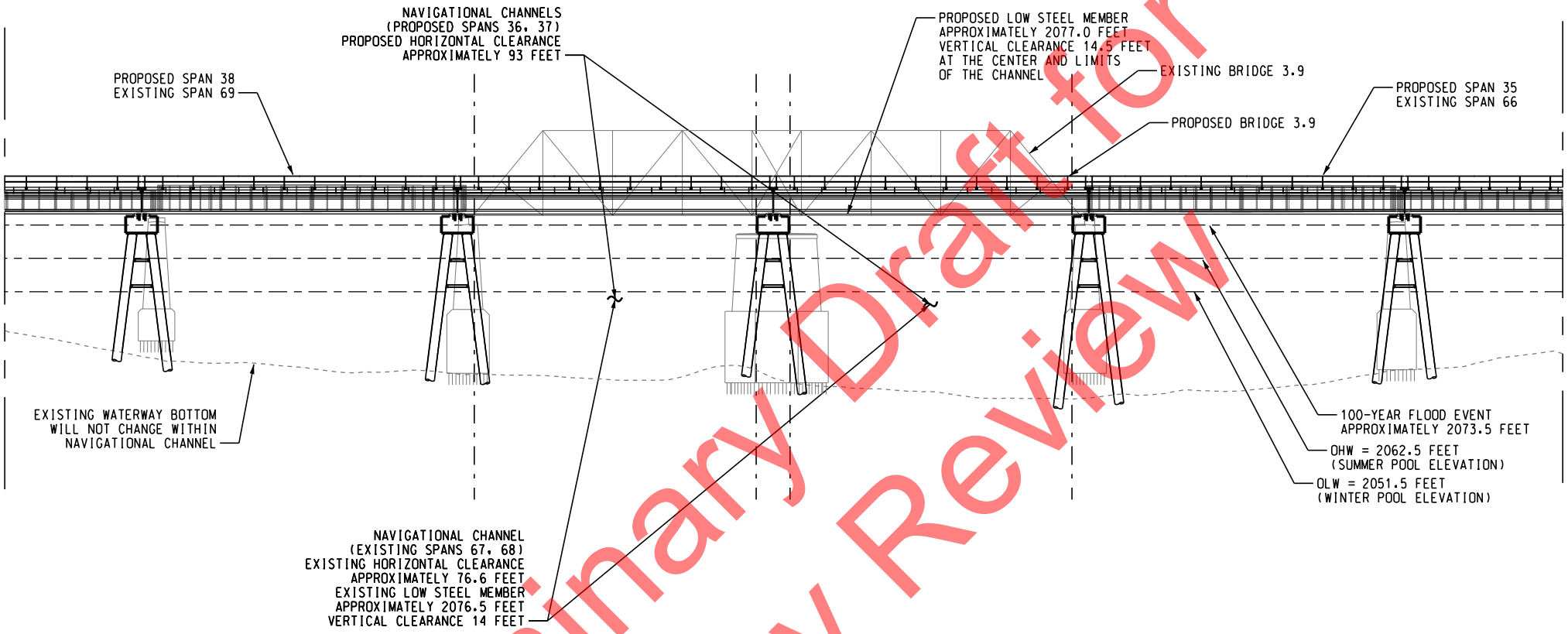

25' 0 25' 50'

APPROX. GRAPHIC SCALE: 1" = 50'

BASED ON: HANSON PROFESSIONAL SERVICES, INC. PRELIMINARY PLANS. ELEVATIONS ARE RELATIVE TO NAVD88. CONCEPTUAL PLANS UTILIZED TO OBTAIN U.S. COAST GUARD BRIDGE PERMIT

LEGEND

- - — - — LIMITS OF NAVIGATIONAL CHANNEL

EXISTING CONDITIONS / PROPOSED WORK

AGENCY REF. NO.:
PROJECT: BNSF / SANDPOINT JUNCTION CONNECTOR BRIDGE 3.9
OWNER: BNSF RAILWAY COMPANY
CONSULTANT: JACOBS ENGINEERING GROUP
LOCATION: BNSF BRIDGE 3.9 MONTANA DIVISION, KOOTENAI RIVER SUB, LINE SEGMENT 45, MP 3.9
MILE POINT OF BRIDGE LOCATION FROM MOUTH: 2.7
WATERWAY: LAKE PEND OREILLE
CITY: SANDPOINT **COUNTY:** BONNER **STATE:** IDAHO
DATE: 08/17/2018

Preliminary Draft for Agency Review

8/17/2018 2:49:13 PM $USER$
P:\W3X76600\6000ISC\6200ESIGN\JARPA\SPJ_CG_BR3-9_Elev-Nov Chan.dgn

USCG0012513/27

ELEVATION VIEW - 3 SOUTH ABUTMENT

PROPOSED PERMANENT BRIDGE 3.9

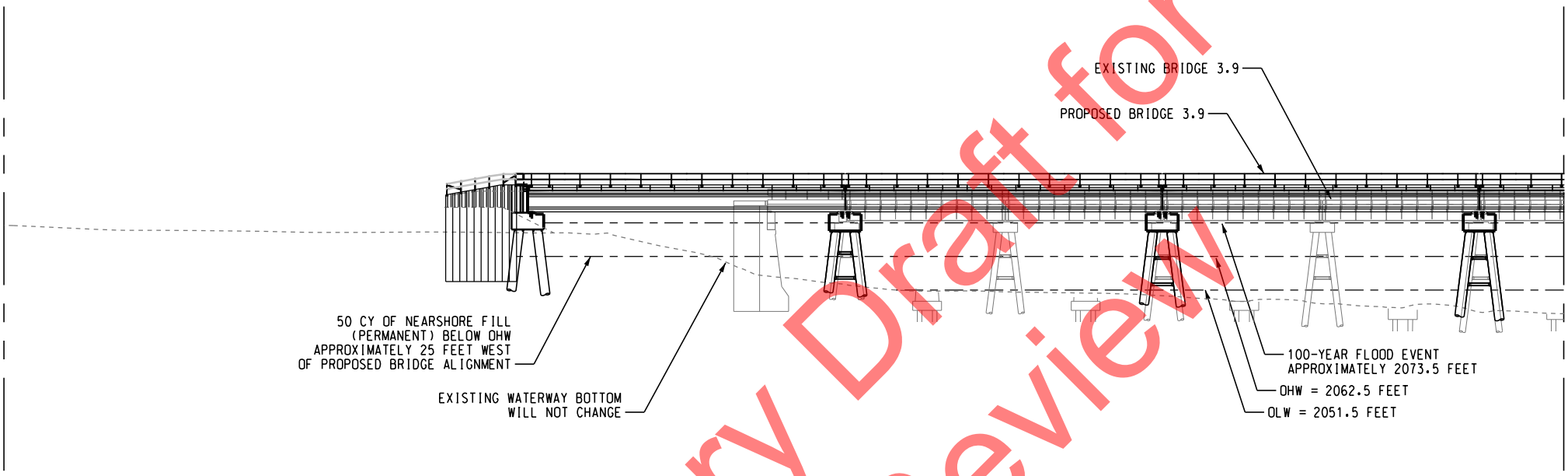

25' 0 25' 50'

APPROX. GRAPHIC SCALE: 1" = 50'

BASED ON: HANSON PROFESSIONAL SERVICES, INC. PRELIMINARY PLANS. ELEVATIONS ARE RELATIVE TO NAVD88. CONCEPTUAL PLANS UTILIZED TO OBTAIN U.S. COAST GUARD BRIDGE PERMIT

Preliminary Draft for Agency Review

EXISTING CONDITIONS / PROPOSED WORK

AGENCY REF. NO.:
PROJECT: BNSF / SANDPOINT JUNCTION CONNECTOR BRIDGE 3.9
OWNER: BNSF RAILWAY COMPANY
CONSULTANT: JACOBS ENGINEERING GROUP
LOCATION: BNSF BRIDGE 3.9 MONTANA DIVISION, KOOTENAI RIVER SUB, LINE SEGMENT 45, MP 3.9
MILE POINT OF BRIDGE LOCATION FROM MOUTH: 2.7
WATERWAY: LAKE PEND OREILLE
CITY: SANDPOINT **COUNTY:** BONNER **STATE:** IDAHO
DATE: 08/17/2018

8/17/2018 2:53:28 PM $USER$
P:\M3X76600\6000ISC\620DESIGN\JARPA\SPJ_CG_BR3-9_Elev-South Abutment.dgn

USCG0012523/27

TYPICAL SECTION VIEW

PROPOSED PERMANENT BRIDGE 3.9

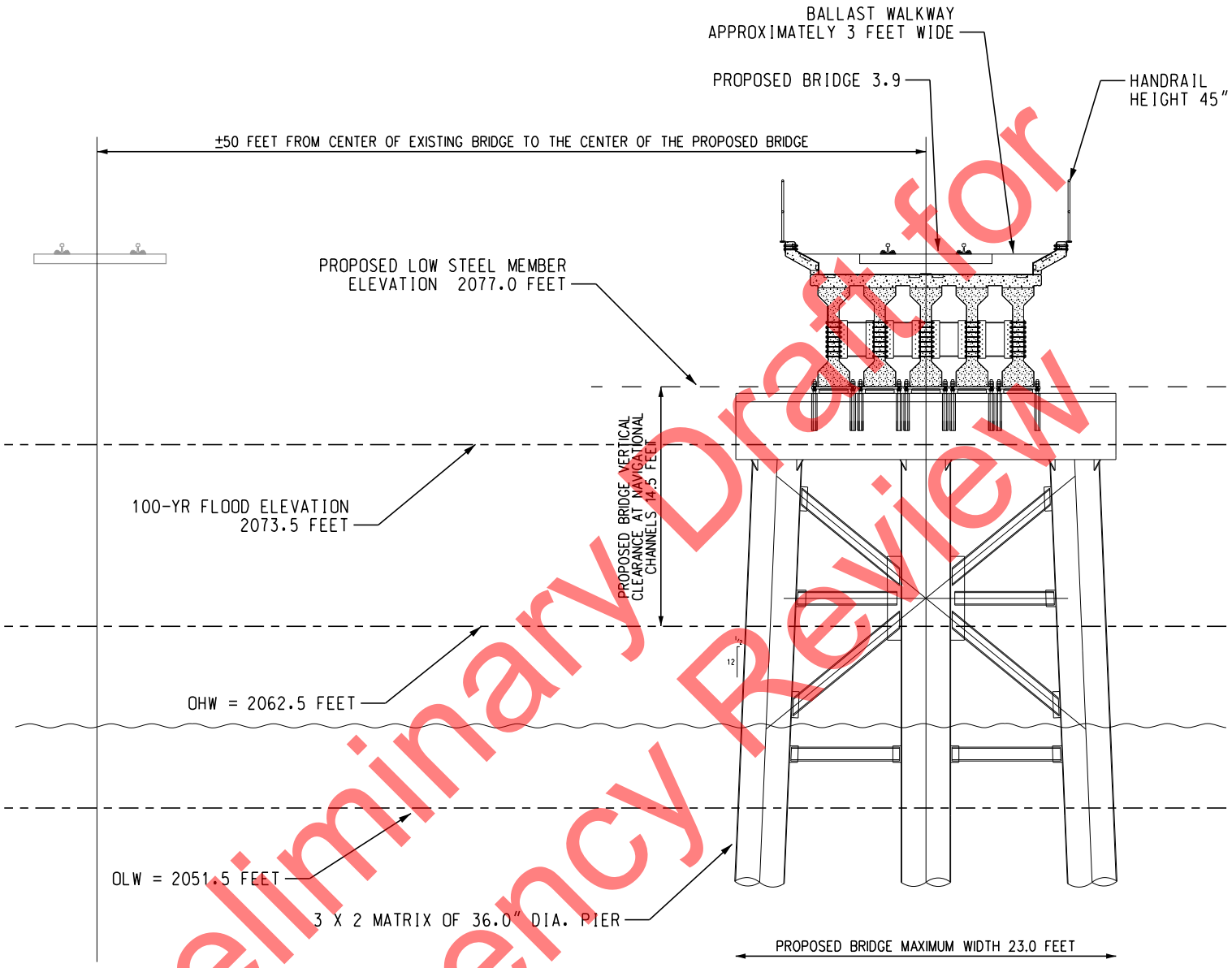

Preliminary Draft for Agency Review

5' 0 5' 10'

APPROX. GRAPHIC SCALE: 1" = 10'

BASED ON: HANSON PROFESSIONAL SERVICES, INC. PRELIMINARY PLANS. ELEVATIONS ARE RELATIVE TO NAVD88. CONCEPTUAL PLANS UTILIZED TO OBTAIN U.S. COAST GUARD BRIDGE PERMIT

EXISTING CONDITIONS / PROPOSED WORK

AGENCY REF. NO.:
PROJECT: BNSF / SANDPOINT JUNCTION CONNECTOR BRIDGE 3.9
OWNER: BNSF RAILWAY COMPANY
CONSULTANT: JACOBS ENGINEERING GROUP
LOCATION: BNSF BRIDGE 3.9 MONTANA DIVISION, KOOTENAI RIVER SUB, LINE SEGMENT 45, MP 3.9
MILE POINT OF BRIDGE LOCATION FROM MOUTH: 2.7
WATERWAY: LAKE PEND OREILLE
CITY: SANDPOINT **COUNTY:** BONNER **STATE:** IDAHO
DATE: 08/17/2018

8/17/2018 3:08:17 PM N:\Scale
P:\W3X76600\600DSC\620DESIGN\JARPA\SPJ_CG_BR3-9_Typical KS.dgn

Appendix B

Official U.S. Fish and Wildlife Species List

Preliminary Draft for Agency Review

United States Department of the Interior

FISH AND WILDLIFE SERVICE
Idaho Fish And Wildlife Office
1387 South Vinnell Way, Suite 368
Boise, ID 83709-1657
Phone: (208) 378-5243 Fax: (208) 378-5262

Preliminary Draft for Agency Review

In Reply Refer To: August 14, 2018
Consultation Code: 01EIFW00-2018-SLI-0158
Event Code: 01EIFW00-2018-E-03524
Project Name: BNSF Sandpoint Junction Connector Project - Official Species (County) List

Subject: Updated list of threatened and endangered species that may occur in your proposed project location, and/or may be affected by your proposed project

To Whom It May Concern:

The enclosed species list identifies threatened, endangered, proposed and candidate species, as well as proposed and final designated critical habitat, that may occur within the boundary of your proposed project and/or may be affected by your proposed project. The species list fulfills the requirements of the U.S. Fish and Wildlife Service (Service) under section 7(c) of the Endangered Species Act (Act) of 1973, as amended (16 U.S.C. 1531 *et seq.*).

New information based on updated surveys, changes in the abundance and distribution of species, changed habitat conditions, or other factors could change this list. Please feel free to contact us if you need more current information or assistance regarding the potential impacts to federally proposed, listed, and candidate species and federally designated and proposed critical habitat. Please note that under 50 CFR 402.12(e) of the regulations implementing section 7 of the Act, the accuracy of this species list should be verified after 90 days. This verification can be completed formally or informally as desired. The Service recommends that verification be completed by visiting the ECOS-IPaC website at regular intervals during project planning and implementation for updates to species lists and information. An updated list may be requested through the ECOS-IPaC system by completing the same process used to receive the enclosed list.

The purpose of the Act is to provide a means whereby threatened and endangered species and the ecosystems upon which they depend may be conserved. Under sections 7(a)(1) and 7(a)(2) of the Act and its implementing regulations (50 CFR 402 *et seq.*), Federal agencies are required to utilize their authorities to carry out programs for the conservation of threatened and endangered species and to determine whether projects may affect threatened and endangered species and/or designated critical habitat.

A Biological Assessment is required for construction projects (or other undertakings having similar physical impacts) that are major Federal actions significantly affecting the quality of the human environment as defined in the National Environmental Policy Act (42 U.S.C. 4332(2)(c)). For projects other than major construction activities, the Service suggests that a biological evaluation similar to a Biological Assessment be prepared to determine whether the project may affect listed or proposed species and/or designated or proposed critical habitat. Recommended contents of a Biological Assessment are described at 50 CFR 402.12.

If a Federal agency determines, based on the Biological Assessment or biological evaluation, that listed species and/or designated critical habitat may be affected by the proposed project, the agency is required to consult with the Service pursuant to 50 CFR 402. In addition, the Service recommends that candidate species, proposed species and proposed critical habitat be addressed within the consultation. More information on the regulations and procedures for section 7 consultation, including the role of permit or license applicants, can be found in the "Endangered Species Consultation Handbook" at:

http://www.fws.gov/endangered/esa-library/pdf/TOC-GLOS.PDF

Please be aware that bald and golden eagles are protected under the Bald and Golden Eagle Protection Act (16 U.S.C. 668 *et seq.*), and projects affecting these species may require development of an eagle conservation plan (https://ww.fws.gov/migratorybirds/pdf/management/eagleconservtionplanguidance.pdf). Additionally, wind energy projects should follow the wind energy guidelines (https://www.fws.gov/ecologica-servces/energy-develpment/wind/html) for minimizing impacts to migratory birds and bats.

Guidance for minimizing impacts to migratory birds for projects including communications towers (e.g., cellular, digital television, radio, and emergency broadcast) can be found at: https://www.fws.ov/bidsbird-enthusiasts/threats-to-birds/collisions/communication-towers.php.

We appreciate your concern for threatened and endangered species. The Service encourages Federal agencies to include conservation of threatened and endangered species into their project planning to further the purposes of the Act. Please include the Consultation Tracking Number in the header of this letter with any request for consultation or correspondence about your project that you submit to our office.

Attachment(s):

- Official Species List
- USFWS National Wildlife Refuges and Fish Hatcheries
- Migratory Birds
- Wetlands

Preliminary Draft for Agency Review

Official Species List

This list is provided pursuant to Section 7 of the Endangered Species Act, and fulfills the requirement for Federal agencies to "request of the Secretary of the Interior information whether any species which is listed or proposed to be listed may be present in the area of a proposed action".

This species list is provided by:

Idaho Fish And Wildlife Office
1387 South Vinnell Way, Suite 368
Boise, ID 83709-1657
(208) 378-5243

Preliminary Draft for Agency Review

Project Summary

Consultation Code: 01EIFW00-2018-SLI-0158

Event Code: 01EIFW00-2018-E-03524

Project Name: BNSF Sandpoint Junction Connector Project - Official Species (County) List

Project Type: TRANSPORTATION

Project Description: BNSF Railway Co. (BNSF) proposes to construct a second mainline track connection, which includes two new over-water bridges, between its Algoma Siding track and the Sandpoint Junction, where BNSF and the Montana Rail Link (MRL) mainlines join.

Project Location:

Approximate location of the project can be viewed in Google Maps: https://www.google.com/maps/place/48.36874949534075N116.54259694201099W

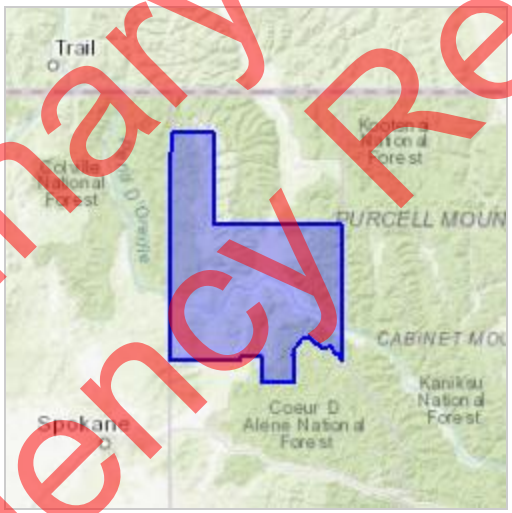

Counties: Bonner, ID

Preliminary Draft for Agency Review

Endangered Species Act Species

There is a total of 6 threatened, endangered, or candidate species on this species list.

Species on this list should be considered in an effects analysis for your project and could include species that exist in another geographic area. For example, certain fish may appear on the species list because a project could affect downstream species.

IPaC does not display listed species or critical habitats under the sole jurisdiction of NOAA Fisheries[1], as USFWS does not have the authority to speak on behalf of NOAA and the Department of Commerce.

See the "Critical habitats" section below for those critical habitats that lie wholly or partially within your project area under this office's jurisdiction. Please contact the designated FWS office if you have questions.

---

1. NOAA Fisheries, also known as the National Marine Fisheries Service (NMFS), is an office of the National Oceanic and Atmospheric Administration within the Department of Commerce.

Mammals

NAME	STATUS
Canada Lynx *Lynx canadensis* Population: Wherever Found in Contiguous U.S. There is **final** critical habitat for this species. Your location is outside the critical habitat. Species profile: https://ecos.fws.gov/ecp/species/3652	Threatened
Grizzly Bear *Ursus arctos horribilis* Population: U.S.A., conterminous (lower 48) States, except where listed as an experimental population or delisted There is **proposed** critical habitat for this species. The location of the critical habitat is not available. Species profile: https://ecos.fws.gov/ecp/species/7642	Threatened
North American Wolverine *Gulo gulo luscus* No critical habitat has been designated for this species. Species profile: https://ecos.fws.gov/ecp/species/5123	Proposed Threatened
Woodland Caribou *Rangifer tarandus caribou* Population: Selkirk Mountain population There is **final** critical habitat for this species. Your location is outside the critical habitat. Species profile: https://ecos.fws.gov/ecp/species/4618	Endangered

Preliminary Draft for Agency Review

Fishes

NAME	STATUS
Bull Trout *Salvelinus confluentus* Population: U.S.A., conterminous, lower 48 states There is **final** critical habitat for this species. Your location overlaps the critical habitat. Species profile: https://ecos.fws.gov/ecp/species/8212	Threatened

Conifers and Cycads

NAME	STATUS
Whitebark Pine *Pinus albicaulis* No critical habitat has been designated for this species. Species profile: https://ecos.fws.gov/ecp/species/1748	Candidate

Critical habitats

There is 1 critical habitat wholly or partially within your project area under this office's jurisdiction.

NAME	STATUS
Bull Trout *Salvelinus confluentus* https://ecos.fws.gov/ecp/species/8212#crithab	Final

Preliminary Draft for Agency Review

USFWS National Wildlife Refuge Lands And Fish Hatcheries

Any activity proposed on lands managed by the National Wildlife Refuge system must undergo a 'Compatibility Determination' conducted by the Refuge. Please contact the individual Refuges to discuss any questions or concerns.

THERE ARE NO REFUGE LANDS OR FISH HATCHERIES WITHIN YOUR PROJECT AREA.

Preliminary Draft for Agency Review

Migratory Birds

Certain birds are protected under the Migratory Bird Treaty Act[1] and the Bald and Golden Eagle Protection Act[2].

Any person or organization who plans or conducts activities that may result in impacts to migratory birds, eagles, and their habitats should follow appropriate regulations and consider implementing appropriate conservation measures, as described below.

---

1. The Migratory Birds Treaty Act of 1918.
2. The Bald and Golden Eagle Protection Act of 1940.
3. 50 C.F.R. Sec. 10.12 and 16 U.S.C. Sec. 668(a)

The birds listed below are birds of particular concern either because they occur on the USFWS Birds of Conservation Concern (BCC) list or warrant special attention in your project location. To learn more about the levels of concern for birds on your list and how this list is generated, see the FAQ below. This is not a list of every bird you may find in this location, nor a guarantee that every bird on this list will be found in your project area. To see exact locations of where birders and the general public have sighted birds in and around your project area, visit the E-bird data mapping tool (Tip: enter your location, desired date range and a species on your list). For projects that occur off the Atlantic Coast, additional maps and models detailing the relative occurrence and abundance of bird species on your list are available. Links to additional information about Atlantic Coast birds, and other important information about your migratory bird list, including how to properly interpret and use your migratory bird report, can be found below.

For guidance on when to schedule activities or implement avoidance and minimization measures to reduce impacts to migratory birds on your list, click on the PROBABILITY OF PRESENCE SUMMARY at the top of your list to see when these birds are most likely to be present and breeding in your project area.

NAME	BREEDING SEASON
Bald Eagle *Haliaeetus leucocephalus* This is not a Bird of Conservation Concern (BCC) in this area, but warrants attention because of the Eagle Act or for potential susceptibilities in offshore areas from certain types of development or activities. https://ecos.fws.gov/ecp/species/1626	Breeds Jan 1 to Aug 31
Cassin's Finch *Carpodacus cassinii* This is a Bird of Conservation Concern (BCC) throughout its range in the continental USA and Alaska. https://ecos.fws.gov/ecp/species/9462	Breeds May 15 to Jul 15

Preliminary Draft for Agency Review

NAME	BREEDING SEASON
Clark's Grebe *Aechmophorus clarkii* This is a Bird of Conservation Concern (BCC) throughout its range in the continental USA and Alaska.	Breeds Jan 1 to Dec 31
Golden Eagle *Aquila chrysaetos* This is not a Bird of Conservation Concern (BCC) in this area, but warrants attention because of the Eagle Act or for potential susceptibilities in offshore areas from certain types of development or activities. https://ecos.fws.gov/ecp/species/1680	Breeds Jan 1 to Aug 31
Lesser Yellowlegs *Tringa flavipes* This is a Bird of Conservation Concern (BCC) throughout its range in the continental USA and Alaska. https://ecos.fws.gov/ecp/species/9679	Breeds elsewhere
Olive-sided Flycatcher *Contopus cooperi* This is a Bird of Conservation Concern (BCC) throughout its range in the continental USA and Alaska. https://ecos.fws.gov/ecp/species/3914	Breeds May 20 to Aug 31
Rufous Hummingbird *selasphorus rufus* This is a Bird of Conservation Concern (BCC) throughout its range in the continental USA and Alaska. https://ecos.fws.gov/ecp/species/8002	Breeds Apr 15 to Jul 15

Probability Of Presence Summary

The graphs below provide our best understanding of when birds of concern are most likely to be present in your project area. This information can be used to tailor and schedule your project activities to avoid or minimize impacts to birds. Please make sure you read and understand the FAQ "Proper Interpretation and Use of Your Migratory Bird Report" before using or attempting to interpret this report.

Probability of Presence ( )

Each green bar represents the bird's relative probability of presence in the 10km grid cell(s) your project overlaps during a particular week of the year. (A year is represented as 12 4-week months.) A taller bar indicates a higher probability of species presence. The survey effort (see below) can be used to establish a level of confidence in the presence score. One can have higher confidence in the presence score if the corresponding survey effort is also high.

How is the probability of presence score calculated? The calculation is done in three steps:

1. The probability of presence for each week is calculated as the number of survey events in the week where the species was detected divided by the total number of survey events for that week. For example, if in week 12 there were 20 survey events and the Spotted Towhee

Preliminary Draft for Agency Review

was found in 5 of them, the probability of presence of the Spotted Towhee in week 12 is 0.25.

2. To properly present the pattern of presence across the year, the relative probability of presence is calculated. This is the probability of presence divided by the maximum probability of presence across all weeks. For example, imagine the probability of presence in week 20 for the Spotted Towhee is 0.05, and that the probability of presence at week 12 (0.25) is the maximum of any week of the year. The relative probability of presence on week 12 is 0.25/0.25 = 1; at week 20 it is 0.05/0.25 = 0.2.
3. The relative probability of presence calculated in the previous step undergoes a statistical conversion so that all possible values fall between 0 and 10, inclusive. This is the probability of presence score.

Breeding Season (■)
Yellow bars denote a very liberal estimate of the time-frame inside which the bird breeds across its entire range. If there are no yellow bars shown for a bird, it does not breed in your project area.

Survey Effort (|)
Vertical black lines superimposed on probability of presence bars indicate the number of surveys performed for that species in the 10km grid cell(s) your project area overlaps. The number of surveys is expressed as a range, for example, 33 to 64 surveys.

No Data (–)
A week is marked as having no data if there were no survey events for that week.

Survey Timeframe
Surveys from only the last 10 years are used in order to ensure delivery of currently relevant information. The exception to this is areas off the Atlantic coast, where bird returns are based on all years of available data, since data in these areas is currently much more sparse.

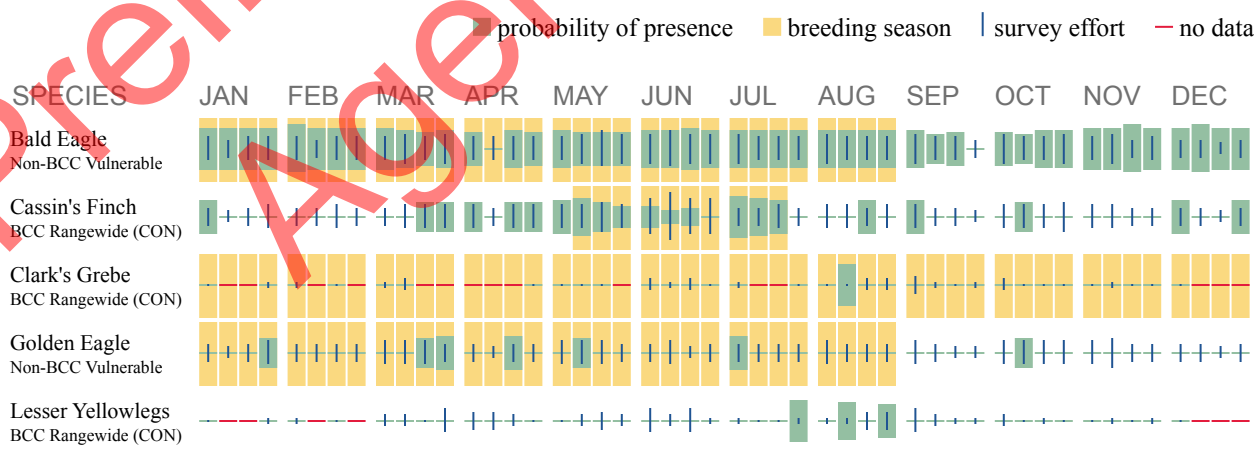

Preliminary Draft for Agency Review

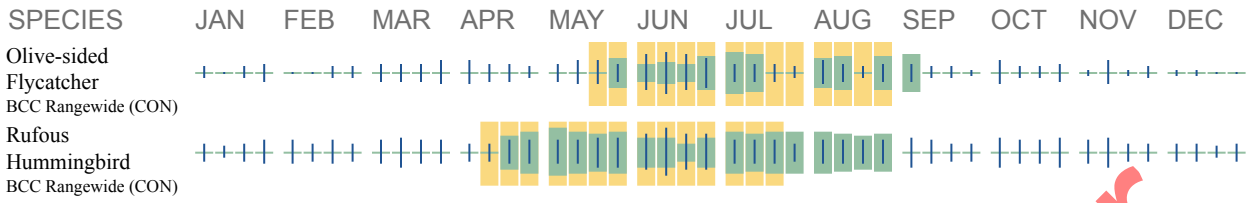

Additional information can be found using the following links:

- Birds of Conservation Concern http://www.fws.gov/birds/management/managed-species/birds-of-conservation-concern.php
- Measures for avoiding and minimizing impacts to birds http://www.fws.gov/birds/management/project-assessment-tools-and-guidance/conservation-measures.php
- Nationwide conservation measures for birds http://www.fws.gov/migratorybirds/pdf/management/nationwidestandardconservationmeasures.pdf

Migratory Birds FAQ

Tell me more about conservation measures I can implement to avoid or minimize impacts to migratory birds.
Nationwide Conservation Measures describes measures that can help avoid and minimize impacts to all birds at any location year round. Implementation of these measures is particularly important when birds are most likely to occur in the project area. When birds may be breeding in the area, identifying the locations of any active nests and avoiding their destruction is a very helpful impact minimization measure. To see when birds are most likely to occur and be breeding in your project area, view the Probability of Presence Summary. Additional measures and/or permits may be advisable depending on the type of activity you are conducting and the type of infrastructure or bird species present on your project site.

What does IPaC use to generate the migratory birds potentially occurring in my specified location?
The Migratory Bird Resource List is comprised of USFWS Birds of Conservation Concern (BCC) and other species that may warrant special attention in your project location.

The migratory bird list generated for your project is derived from data provided by the Avian Knowledge Network (AKN). The AKN data is based on a growing collection of survey, banding, and citizen science datasets and is queried and filtered to return a list of those birds reported as occurring in the 10km grid cell(s) which your project intersects, and that have been identified as warranting special attention because they are a BCC species in that area, an eagle (Eagle Act requirements may apply), or a species that has a particular vulnerability to offshore activities or development.

Preliminary Draft for Agency Review

Again, the Migratory Bird Resource list includes only a subset of birds that may occur in your project area. It is not representative of all birds that may occur in your project area. To get a list of all birds potentially present in your project area, please visit the E-bird Explore Data Tool.

What does IPaC use to generate the probability of presence graphs for the migratory birds potentially occurring in my specified location?
The probability of presence graphs associated with your migratory bird list are based on data provided by the Avian Knowledge Network (AKN). This data is derived from a growing collection of survey, banding, and citizen science datasets .

Probability of presence data is continuously being updated as new and better information becomes available. To learn more about how the probability of presence graphs are produced and how to interpret them, go the Probability of Presence Summary and then click on the "Tell me about these graphs" link.

How do I know if a bird is breeding, wintering, migrating or present year-round in my project area?
To see what part of a particular bird's range your project area falls within (i.e. breeding, wintering, migrating or year-round), you may refer to the following resources: The Cornell Lab of Ornithology All About Birds Bird Guide, or (if you are unsuccessful in locating the bird of interest there), the Cornell Lab of Ornithology Neotropical Birds guide. If a bird on your migratory bird species list has a breeding season associated with it, if that bird does occur in your project area, there may be nests present at some point within the timeframe specified. If "Breeds elsewhere" is indicated, then the bird likely does not breed in your project area.

What are the levels of concern for migratory birds?
Migratory birds delivered through IPaC fall into the following distinct categories of concern:

1. "BCC Rangewide" birds are Birds of Conservation Concern (BCC) that are of concern throughout their range anywhere within the USA (including Hawaii, the Pacific Islands, Puerto Rico, and the Virgin Islands);
2. "BCC - BCR" birds are BCCs that are of concern only in particular Bird Conservation Regions (BCRs) in the continental USA; and
3. "Non-BCC - Vulnerable" birds are not BCC species in your project area, but appear on your list either because of the Eagle Act requirements (for eagles) or (for non-eagles) potential susceptibilities in offshore areas from certain types of development or activities (e.g. offshore energy development or longline fishing).

Although it is important to try to avoid and minimize impacts to all birds, efforts should be made, in particular, to avoid and minimize impacts to the birds on this list, especially eagles and BCC species of rangewide concern. For more information on conservation measures you can implement to help avoid and minimize migratory bird impacts and requirements for eagles, please see the FAQs for these topics.

Details about birds that are potentially affected by offshore projects

Preliminary Draft for Agency Review

For additional details about the relative occurrence and abundance of both individual bird species and groups of bird species within your project area off the Atlantic Coast, please visit the Northeast Ocean Data Portal. The Portal also offers data and information about other taxa besides birds that may be helpful to you in your project review. Alternately, you may download the bird model results files underlying the portal maps through the NOAA NCCOS Integrative Statistical Modeling and Predictive Mapping of Marine Bird Distributions and Abundance on the Atlantic Outer Continental Shelf project webpage.

Bird tracking data can also provide additional details about occurrence and habitat use throughout the year, including migration. Models relying on survey data may not include this information. For additional information on marine bird tracking data, see the Diving Bird Study and the nanotag studies or contact Caleb Spiegel or Pam Loring.

What if I have eagles on my list?
If your project has the potential to disturb or kill eagles, you may need to obtain a permit to avoid violating the Eagle Act should such impacts occur.

Proper Interpretation and Use of Your Migratory Bird Report
The migratory bird list generated is not a list of all birds in your project area, only a subset of birds of priority concern. To learn more about how your list is generated, and see options for identifying what other birds may be in your project area, please see the FAQ "What does IPaC use to generate the migratory birds potentially occurring in my specified location". Please be aware this report provides the "probability of presence" of birds within the 10 km grid cell(s) that overlap your project; not your exact project footprint. On the graphs provided, please also look carefully at the survey effort (indicated by the black vertical bar) and for the existence of the "no data" indicator (a red horizontal bar). A high survey effort is the key component. If the survey effort is high, then the probability of presence score can be viewed as more dependable. In contrast, a low survey effort bar or no data bar means a lack of data and, therefore, a lack of certainty about presence of the species. This list is not perfect; it is simply a starting point for identifying what birds of concern have the potential to be in your project area, when they might be there, and if they might be breeding (which means nests might be present). The list helps you know what to look for to confirm presence, and helps guide you in knowing when to implement conservation measures to avoid or minimize potential impacts from your project activities, should presence be confirmed. To learn more about conservation measures, visit the FAQ "Tell me about conservation measures I can implement to avoid or minimize impacts to migratory birds" at the bottom of your migratory bird trust resources page.

Preliminary Draft for Agency Review

Wetlands

Impacts to NWI wetlands and other aquatic habitats may be subject to regulation under Section 404 of the Clean Water Act, or other State/Federal statutes.

For more information please contact the Regulatory Program of the local U.S. Army Corps of Engineers District.

Please note that the NWI data being shown may be out of date. We are currently working to update our NWI data set. We recommend you verify these results with a site visit to determine the actual extent of wetlands on site.

Due to your project's size, the list below may be incomplete, or the acreages reported may be inaccurate. For a full list, please contact the local U.S. Fish and Wildlife office or visit https://www.fws.gov/wetlands/data/mapper.HTML

FRESHWATER EMERGENT WETLAND

- PEM1A
- PEM1C
- PEM1F
- PEM1B
- PEM1Cb
- PEM1Fb
- PEM1Cx
- PEM1Fh

FRESHWATER FORESTED/SHRUB WETLAND

- PSS1A
- PFO1A
- PSS1C
- PFO4A
- PFO1C
- PSS1Ch
- PSS1F
- PSS1Fh
- PSS4A
- PFO4C
- PSS4C

FRESHWATER POND

- PABFb

Preliminary Draft for Agency Review

- PABF
- PABFh
- PABFx
- PUBHb
- PUBHh
- PUBHx
- PAB4H
- PUBH
- PUSC
- PUSCh
- PUBF
- PUSA
- PUSAh

LAKE

- L2USCh
- L1UBH
- L1UBHh
- L2AB4H

RIVERINE

- R3USC
- R3USA
- R5UBH
- R4SBC
- R3UBH
- R5UBFx

Preliminary Draft for Agency Review

Appendix C

Construction Timing Table

Preliminary Draft for Agency Review

BNSF - Sandpoint Junction Connector: Key Element Construction Timing w/Bull Trout Migration (BTM) Periods

	Construction Year				2019												2020												2021												2022												2023											
	Bull Trout Migration Periods (Spring; Fall)				BTM						BTM						BTM						BTM						BTM						BTM						BTM						BTM						BTM											
	TASK	Projected Start Date	Projected End Date	DURATION (Months)	March	April	May	June	July	August	September	October	November	December	January	February	March	April	May	June	July	August	September	October	November	December	January	February	March	April	May	June	July	August	September	October	November	December	January	February	March	April	May	June	July	August	September	October	November	December	January	February	March	April	May	June	July	August	September	October	November	December	January	February	March	April	May	June	July	August	September	October	November	December
	Section 7 Formal Consultation Complete	---	---	---																																																																
	Section 106 Consultation Complete	---	---	---																																																															
	Corps Individual Permit Issued (404)	---	---	---																																																															
	DEQ 401 WQ Cert Issued	---	---	---																																																															
	USCG EA FONSI Complete	---	---	---																																																															
1	Access / Staging Development: Contractor Mobilize	Mar-2019	May-2019	3																																																															
2	Identify Work Limits	Mar-2019	May-2019	3																																																															
3	Install Upland Enviro Protection BMPs	Mar-2019	May-2019	3																																																															
4	Nearshore Fills	Mar-2019	May-2019	3																																																															
5	Upland Work Adjacent to Nearshore Fills	May-2019	Jul-2019	3																																																															
6	Construct Temporary Bridge - 3.1 Sand Creek	Mar-2019	Nov-2019	7																																																															
7	Construct Temporary Bridge - 3.9 LPO	Apr-2019	May-2020	13																																																															
8	Construct Permanent Bridge - 3.1 Sand Creek *	Nov-2019	Mar-2020	3																																																															
9	Construct Permanent Bridge - 3.9 LPO	Aug-2019	Aug-2021	24																																																															
10	Remove Temporary Work Bridge - 3.1 Sand Creek	Feb-2021	Apr-2021	3																																																															
11	Remove Temporary Work Bridge - 3.9 LPO	Jul-2021	Nov-2022	12																																																															
12	Remove Temporary Nearshore Fill	Mar-2022	May-2022	3																																																															
13	Stabilize - Restore Disturbed Areas	Mar-2023	May-2023	3																																																															
14	Contractor Demobilize	Mar-2023	May-2023	3																																																															
	Total Project Duration (Months):	**Mar-2019**	**Dec-2023**	**86**																																																															

* Note remove of center span/piles during OHW and reinstall during OLW

Denotes Potential for LPO Pile Driving Activities During BTM

Preliminary Draft for Agency Review

Appendix D

Pile Driving Impact Calculators

Preliminary Draft for Agency Review

Model last updated January 26, 2009

Project Title	BNSF SPJ - Sand Creek Temporary Work Bridge 3.1
Pile information (size, type, number, pile strikes, etc.)	Impact Proof 10 24-inch-diameter steel piles (1 pile per pier) after vibratory to refusal; maximum 60 strikes/pile; 2-3 hours each install; 4 piles/day (2 simultaneously). No bubble curtains.

Fill in green cells: estimated sound levels and distances at which they were measured, estimated number of pile strikes per day, and transmision loss constant.

	Acoustic Metric			
	Peak	SEL	RMS	Effective Quiet
Measured single strike level (dB)	**207**	**178**	**194**	**150**
Distance (m)	**10**	**10**	**10**	

Estimated number of strikes	**240**

Cumulative SEL at measured distance
202

	Distance (m) to threshold			
	Onset of Physical Injury			Behavior
	Peak	Cumulative SEL dB**		RMS
	dB	Fish ≥ 2 g	Fish < 2 g	dB
Transmission loss constant (15 if unknown)	206	187	183	150
15	**12**	**97**	**179**	**8577**

** This calculation assumes that single strike SELs < 150 dB do not accumulate to cause injury (Effective Quiet)

Notes (source for estimates, etc.)

(This model was last updated January 26, 2009)

8,577meters = 5.33 miles; 97 meters = 0.60 mile; 12 meters = 0.007 mile (37 feet)

Unmitigated(levels for simultaneous driving of two piles at a time), measured 10 m from the pile, 24-inch steel pipe pile; per WSDOT BA Preparation Advanced Training Manual Version 4-2018, Table 7-12.

Number of strikes needed/24" pile for construction equipment load requirements - per BNSF

Preliminary Draft for Agency Review

Project Title	BNSF SPJ - LPO Temporary Work Bridge 3.9
Pile information (size, type, number, pile strikes, etc.)	Impact Proof 76 24-inch-diameter steel piles (1 pile per pier) after vibratory to refusal; maximum 60 strikes/pile; 2-3 hours each install; 4 piles/day (2 simultaneously). No bubble curtains.

Fill in green cells: estimated sound levels and distances at which they were measured, estimated number of pile strikes per day, and transmision loss constant.

	Acoustic Metric			
	Peak	SEL	RMS	Effective Quiet
Measured single strike level (dB)	**207**	**178**	**194**	**150**
Distance (m)	**10**	**10**	**10**	

Estimated number of strikes	**240**

Cumulative SEL at measured distance
202

	Distance (m) to threshold			
	Onset of Physical Injury			Behavior
	Peak	Cumulative SEL dB**		RMS
	dB	Fish ≥ 2 g	Fish < 2 g	dB
Transmission loss constant (15 if unknown)	206	187	183	150
15	**12**	**97**	**179**	**8577**

** This calculation assumes that single strike SELs < 150 dB do not accumulate to cause injury (Effective Quiet)

Notes (source for estimates, etc.)

(This model was last updated January 26, 2009)

8,577meters = 5.33 miles; 97 meters = 0.60 mile; 12 meters = 0.007 mile (37 feet)

Unmitigated(levels for simultaneous driving of two piles at a time), measured 10 m from the pile, 24-inch steel pipe pile; per WSDOT BA Preparation Advanced Training Manual Version 4-2018, Table 7-12.

Number of strikes needed/24" pile for construction equipment load requirements - per BNSF

Preliminary Draft for Agency Review

Project Title	BNSF Sandpoint Junction Connector, Sand Ck Br. 3.1
Pile information (size, type, number, pile strikes, etc.)	64 24-inch-diameter steel pipe piles, 22 below OHWM. Maximum 1,200 strikes/pile, 1-2 hours each install; 4 piles/day (2 simultaneously). Install during winter pool/low-water conditions. Attenuated -3 dB for bubble curtains

Fill in green cells: estimated sound levels and distances at which they were measured, estimated number of pile strikes per day, and transmision loss constant.

	Acoustic Metric			
	Peak	SEL	RMS	Effective Quiet
Measured single strike level (dB)	**204**	**175**	**191**	**150**
Distance (m)	**10**	**10**	**10**	

Estimated number of strikes	**4,800**

Cumulative SEL at measured distance
212

	Distance (m) to threshold			
	Onset of Physical Injury			Behavior
	Peak	Cumulative SEL dB**		RMS
	dB	Fish ≥ 2 g	Fish < 2 g	dB
Transmission loss constant (15 if unknown)	206	187	183	150
15	**7**	**451**	**464**	**5412**

** This calculation assumes that single strike SELs < 150 dB do not accumulate to cause injury (Effective Quiet)

Notes (source for estimates, etc.)

(This model was last updated January 25, 2009)

7 meters = 23 feet; 284 meters= 0.28 miles; 464 meters = 0.29 miles; 5,412 meters = 3.36 miles
LPO main waterbody is 0.25 mile downstream of Bridge 3.1; Sand Creek considered to be an inlet of LPO so within BT CH.

Per sound pressure levels attenuated -3 dB by using bubble curtain in water depths 2 feet or greater; for single strikes, measured 10 m from the pile, 24-inch steel pipe pile; per WSDOT BA Preparation Advanced Training Manual Version 4-2017, Table 7-12.

Dominant frequencies generated in pile driving are between 50 & 1000 Hz, so most of the energy is not propagated in water depths of 1.5 feet or less.

Underwater noise propagation is limited by sinusoity of a system (where river bends noise is unlikely to propagate; line-of-sight rule is used to determine the extent of noise propagation in river systems.)

Preliminary Draft for Agency Review

Project Title	BNSF Sandpoint Junction Connector, LPO Bridge 3.9
Pile information (size, type, number, pile strikes, etc.)	288 36-inch-diameter steel piles; maximum 1600 strikes/pile; 2-3 hours each install; 4 piles/day (2 simultaneously) Attenuated by 3 dB for bubble curtains

Fill in green cells: estimated sound levels and distances at which they were measured, estimated number of pile strikes per day, and transmision loss constant.

	Acoustic Metric			
	Peak	SEL	RMS	Effective Quiet
Measured single strike level (dB)	**207**	**180**	**190**	**150**
Distance (m)	**10**	**10**	**10**	

Estimated number of strikes	**6,400**

Cumulative SEL at measured distance
218

	Distance (m) to threshold			
	Onset of Physical Injury			Behavior
	Peak	Cumulative SEL dB**		RMS
	dB	Fish ≥ 2 g	Fish < 2 g	dB
Transmission loss constant (15 if unknown)	206	187	183	150
15	**12**	**1000**	**1000**	**4642**

** This calculation assumes that single strike SELs < 150 dB do not accumulate to cause injury (Effective Quiet)

Notes (source for estimates, etc.)

(This model was last updated January 26, 2009)

4,642 meters = 2.88 miles; 1,000 meters =0 .62 mile; 12 meters = 0.007 mile (37 feet)

Attenuated (-3 dB for bubble curtains, levels for simultaneous driving of two piles at a time), measured 10 m from the pile, 36-inch steel pipe pile; per WSDOT BA Preparation Advanced Training Manual Version 4-2017, Table 7-12.

Number of strikes needed/36" pile for rail load requirements - per BNSF

Preliminary Draft for Agency Review

Appendix E

2008 Pier Replacements Underwater Sound Level Measurements Report

Preliminary Draft for Agency Review

USCG0012773/27

Robert Miner Dynamic Testing, Inc.
Consulting, Dynamic Measurements and Analyses for Deep Foundations

July 31, 2008

Mr. Rick Smith P.E.
Jacobs Engineering
811 1st Ave, Suite 407
Seattle, WA 98104-1418

Re: Underwater Sound Level Measurements
24" OD Steel Piles, Junttan HHK5a Hydraulic hammer
July 14-July 25, 2008
Pier Replacements, BNSF Long Bridge, Sandpoint, ID

Dear Mr. Smith,

This report presents results from underwater sound level measurements for the project referenced above. Robert Miner Dynamic Testing, Inc. (RMDT) completed these measurements and this report at your request.

MEASUREMENT OBJECTIVES

The underwater sound level measurements reported herein were requested by Jacobs Engineering and BNSF. At the request of the United States Fish and Wildlife Service, RMDT's procedure generally followed the procedures set forth by WSDOT. This procedure called for monitoring of peak sound pressure level (SPL), Sound Exposure Level (SEL), and Root Mean Square (RMS) during periods with air supply to the bubble curtain alternating on and off.

TEST DETAILS

Test Sequence

RMDT carried out hydro-acoustic monitoring during ACC West Coast's (Hurlen) pile driving operations on six days spanning the period of July 14 to July 25. Driving on all piles was completed with an impact hammer and RMDT monitored SPL values during impact driving. Generally, the pile penetration resistance (blows/ft) was relatively modest such that driving times for individual piles were relatively short with respect to the pile length.

Piles

All piles were 24" OD closed end steel piles with an 0.50" nominal wall thickness and a computed cross-sectional area of 36.9 square inches. During impact driving pile lengths were either approximately 80 ft or 160 ft, with approximately 160 ft final lengths and approximately 140 ft final penetration in soil. We understand that soils were predominantly clay, and that such clay extended to great depth below the pile tips. RMDT's measurements of water depth indicated that the water depth near the piles was typically between 14 and 19 ft, and that similar shallow depths persisted to great distance from the work site.

Preliminary Draft for Agency Review

Mailing Address: P.O. Box 340, Manchester, WA, 98353, USA **Phone:** 360-871-5480
Location: 2288 Colchester Dr. E., Ste A, Manchester, WA, 98353 **Fax:** 360-871-5483

Hammer

The piles were driven with a Junttan HHK5a hydraulic hammer having a ram weighing 11,000 pounds and maximum potential energy of 43,400 ft-pounds (59 kJ), and a maximum stroke of 3.94 ft. (1.2 m). Dynamic pile measurements completed by RMDT at this site during separate foundation engineering investigations indicate that the HHK 5a hammer was typically operated so that it provided transfer energy ranging from 30,000 to 44,000 ft-pounds, with peak dynamic forces typically ranging from 660,000 to 890,000 pounds.

Bubble Curtain

The bubble curtain consisted of two submerged rings, each with an individual air supply line originating at a manifold on the deck of the work barge. One ring was placed at the mud line, and another approximately half way up the water column. For further details on the bubble curtain please refer to other project documents.

Instrumentation

Underwater sound levels were measured with one or two Reson Type 4013 hydrophones. Signals from these pressure transducers were recorded using a Dactron Photon 4-channel signal analyzer connected to a Fujitsu tablet computer. Hydrophone calibrations were checked in the field and in the laboratory using a Gras type 42AC piston-phone calibrator with hydrophone adaptor . For occasional measurement of airborne sound we used an Ono Sokki LA-4350 Type 1 integrating sound level meter.

All but three of our measurements were made by suspending the hydrophones in water adjacent to the work barge. Hydrophones were held at depth of approximately 4 and 2 m using lead weights. Some tests were made at distance of 80, 500, and 1000 ft from the pile, and for such tests the hydrophones were deployed over the side of a work skiff at depths of 3 and 2 m. Distances between the pile and our instruments were determined with a 100 foot fiber tape, or for longer distances by pier number and spacing.

ANALYSIS METHODOLOGY

Per the general procedure requested by the USFWS, results are provided in terms of peak Sound Pressure Level, Sound Exposure Level (SEL), and Root Mean Square (RMS). Each of these results are discussed and defined below.

Peak Sound Pressure Level

The peak "instantaneous" Sound Pressure Level (SPL_{peak}) is obtained from the maximum excursion (either positive or negative) from the ambient pressure. Although the pressure is measured in units such as Pascals or psi, SPL is expressed using the non-dimensional and logarithmic decibel scale. The formula for converting a measured peak pressure to SPL_{peak} is given below:

$$SPL_{peak} = 20 \text{ Log}(p/p_{ref}),$$

where p is the measured peak in Pascals (Pa) divided by a customary reference pressure. For water the customary reference pressure, p_{ref} is 1 microPascal.

Thus, signals with for which the peak pressure is 1000, 3163, or 10,000 Pa would have SPL_{peak} values of 180 dB, 190 dB, or 200 dB, respectively. For this calculation the "peak" pressure is the greater of the maximum pressure and the absolute value of the minimum pressure.

Preliminary Draft for Agency Review

Sound Exposure Level

The Sound Exposure Level, SEL is the cumulative energy expressed in decibels for a single hammer blow. It is computed as the cumulative sum of the square of individual values multiplied by time between values. For this report the SEL was computed using the individual values in units of Pascals, and then converted to dB scale for presentation.

Root Mean Square Sound Pressure Level

The root mean square Sound Pressure Level, RMS, is the square root of the SEL value computed for a specific interval within the wave form of an individual hammer blow. In this report we computed the RMS value for a time interval that contains 90 percent of the signal energy. This time was defined to begin and end when the SEL reached 5 percent and 95 percent of it's peak value, respectively.

MEASUREMENT RESULTS

Appendix A presents sound pressure measurements over time for each monitored pile. Most plots in Appendix A present results from 2 hydrophone depths, with the depths differentiated by color. Table 1 summarizes SPL_{peak} values for two or three measurement periods during driving for each pile. For those piles which were driven with the bubble curtain alternating on and off, a mean SPL_{peak} is also given in both Pascals and Decibels. All sound pressure levels for July 14-16 were measured with the bubble curtains on.

From among the series of hammer blows represented in Appendix A, we selected individual hammer blows and computed the detailed sound pressure metrics, SPL_{peak}, SEL, and RMS, as discussed above. Appendix B contains plots showing these metrics and Table 2 summarizes these results for individual pile and bubble curtain use. For each data set the blow selected for detailed analysis was the blow with the highest or second highest SPL_{peak}. The highest peak was not used if it was greater than 1.1 times the average of the next two highest peaks.

Appendix B contains plots for each selected blow showing the measurement, narrow band frequency spectra, Sound Exposure Level, and a summary of the computed sound pressure metrics.

I trust that this information will assist you and the project team. Please do not hesitate to contact us if you have any questions for RMDT regarding our measurements of this report.

Sincerely,

W. Javan Miner

Robert F. Miner

Robert Miner Dynamic Testing, Inc.

Preliminary Draft for Agency Review

Table 1. Summary of Underwater Sound Levels.

Date and Time	Pile	SPL_{peak} dB	Mean SPL_{peak} Bubble Curtain ON		Mean SPL_{peak} Bubble Curtain OFF	
			Pa	dB	Pa	dB
July 14, 2008 - 15:01	Bent 9	197 dB	5600 Pa	195 dB	N/A	N/A
July 15, 2008 - 10:49	8-1-2	186 dB	1800 Pa	185 dB	N/A	N/A
July 15, 2008 - 13:18	8-1-2	187 dB	2000 Pa	186 dB	N/A	N/A
July 15, 2008 - 13:54	9-2-3	198 dB	6300 Pa	196 dB	N/A	N/A
July 16, 2008 - 09:29	9-2-1	162 dB	110 Pa	161 dB	N/A	N/A
July 16, 2008 - 09:49	9-2-2	166 dB	180 Pa	165 dB	N/A	N/A
July 16, 2008 - 11:49	9-2-1	196 dB	5000 Pa	194 dB	N/A	N/A
July 16, 2008 - 12:35	9-2-2	196 dB	5000 Pa	194 dB	N/A	N/A
July 21, 2008 - 14:25	N/A	195 dB	3500 Pa	191 dB	5000 Pa	194 dB
July 21, 2008 - 14:41	N/A	203 dB	5000 Pa	194 dB	10000 Pa	200 dB
July 21, 2008 - 14:51	N/A	201 dB	5000 Pa	194 dB	8900 Pa	199 dB
July 24, 2008 - 09:13	12-2-1	198 dB	4500 Pa	193 dB	5600 Pa	195 dB
July 24, 2008 - 09:38	12-2-1	199 dB	4500 Pa	193 dB	7900 Pa	198 dB
July 24, 2008 - 12:13	12-1-2	201 dB	7100 Pa	197 dB	8900 Pa	199 dB
July 24, 2008 - 12:44	12-1-2	200 dB	7100 Pa	197 dB	5600 Pa	195 dB
July 25, 2008 - 10:53	12-2-2	199 dB	5000 Pa	194 dB	7100 Pa	197 dB
July 25, 2008 - 11:21	12-2-2	197 dB	4500 Pa	193 dB	5000 Pa	194 dB
July 25, 2008 - 11:27	12-2-2	198 dB	5600 Pa	195 dB	5600 Pa	195 dB

Preliminary Draft for Agency Review

Table 2. Summary of Detailed Waveform Analyses

Date and Time	Pile	Bubble Curtain ON / OFF	SPL_{Peak}		SEL		RMS	
			Pa	dB	Pa	dB	Pa	dB
July 21, 2008 - 14:51	N/A	ON	6300 Pa	196 dB	500 Pa	174 dB	1250 Pa	182 dB
		OFF	11000 Pa	201 dB	700 Pa	177 dB	1800 Pa	185 dB
July 24, 2008 - 09:38	12-2-1	ON	6300 Pa	196 dB	400 Pa	172 dB	1100 Pa	181 dB
		OFF	8900 Pa	199 dB	500 Pa	174 dB	1400 Pa	183 dB
July 24, 2008 - 12:13	12-1-2	ON	7900 Pa	198 dB	700 Pa	177 dB	1800 Pa	185 dB
		OFF	11000 Pa	201 dB	800 Pa	178 dB	2000 Pa	186 dB
July 25, 2008 - 11:21	12-2-2	ON	6300 Pa	196 dB	400 Pa	172 dB	1000 Pa	180 dB
		OFF	7900 Pa	198 dB	450 Pa	173 dB	1400 Pa	183 dB

Preliminary Draft for Agency Review

Appendix A

Time Histories for Peak Sound Pressure Measurements
and
Time Histories for Selected Individual Hammer Blows

Preliminary Draft for Agency Review

USCG0012833/27

BNSF. July 14, 2008. 15:01

Re-strike Bent 9, Bubble Curtain On (Two Rings)

Channel 3 (blue) is ~ 20 m from pile

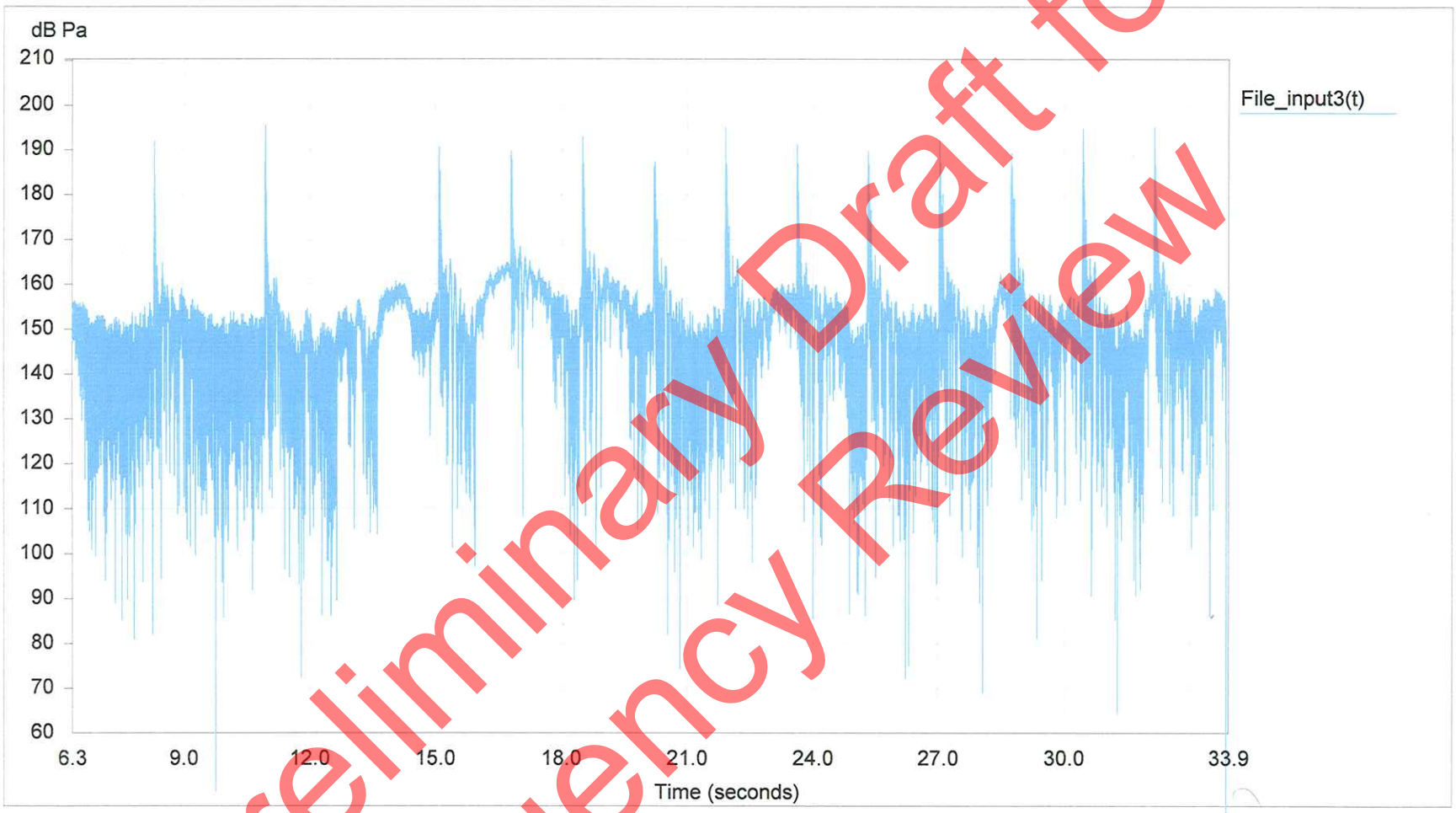

Preliminary Draft for Agency Review

BNSF. July 15, 2008. 10:49

Pile 8-1-2, Bubble Curtain On (Two Rings)

Channel 3 (blue) is ~ 12 m from pile (4 m depth), Channel 4 (red) is ~ 12 m from pile (3 m depth)

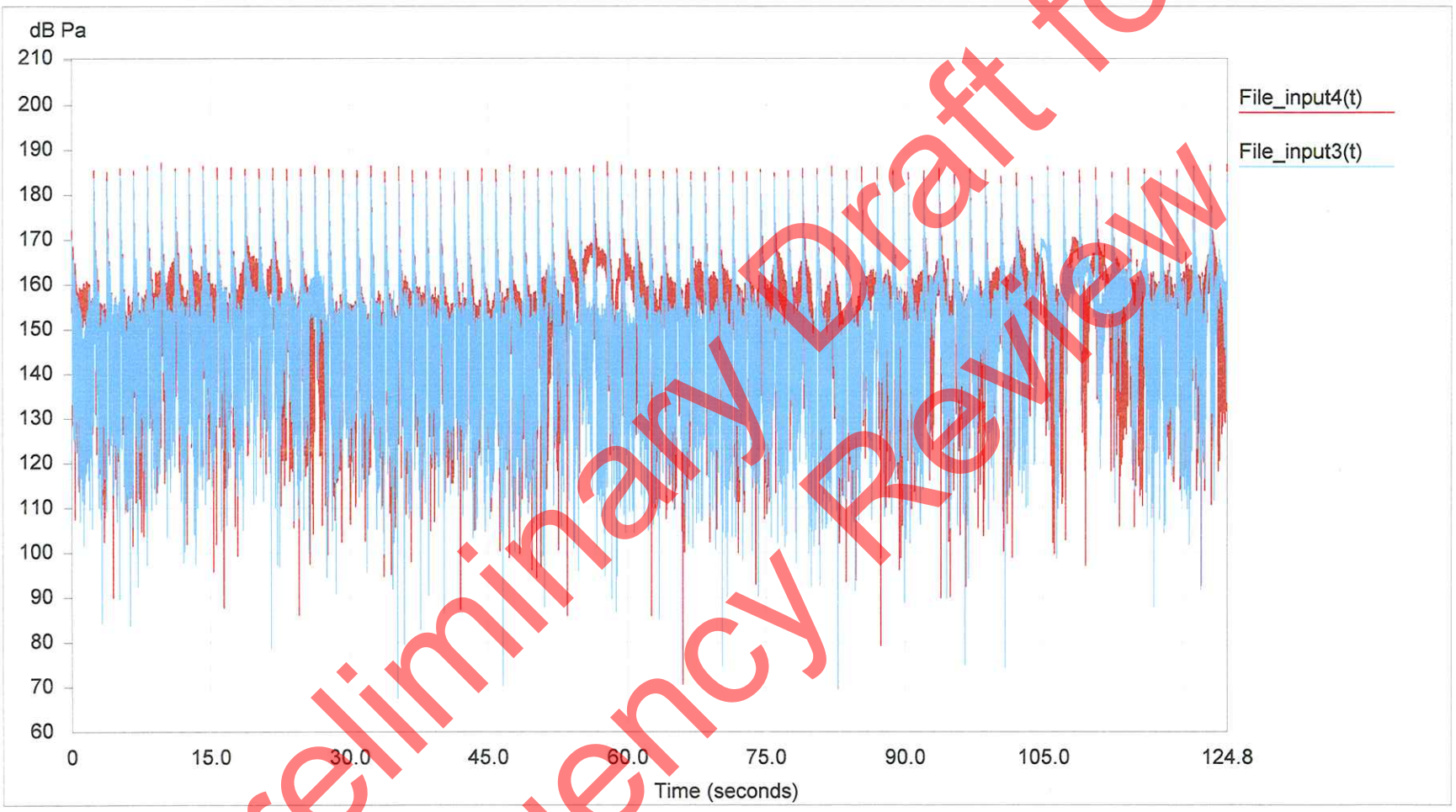

Preliminary Draft for Agency Review

USCG0012853/27

BNSF. July 15, 2008. 13:18

Pile 8-1-2, Bubble Curtain On (Two Rings)

Channel 3 (blue) is ~ 12 m from pile (4 m depth)

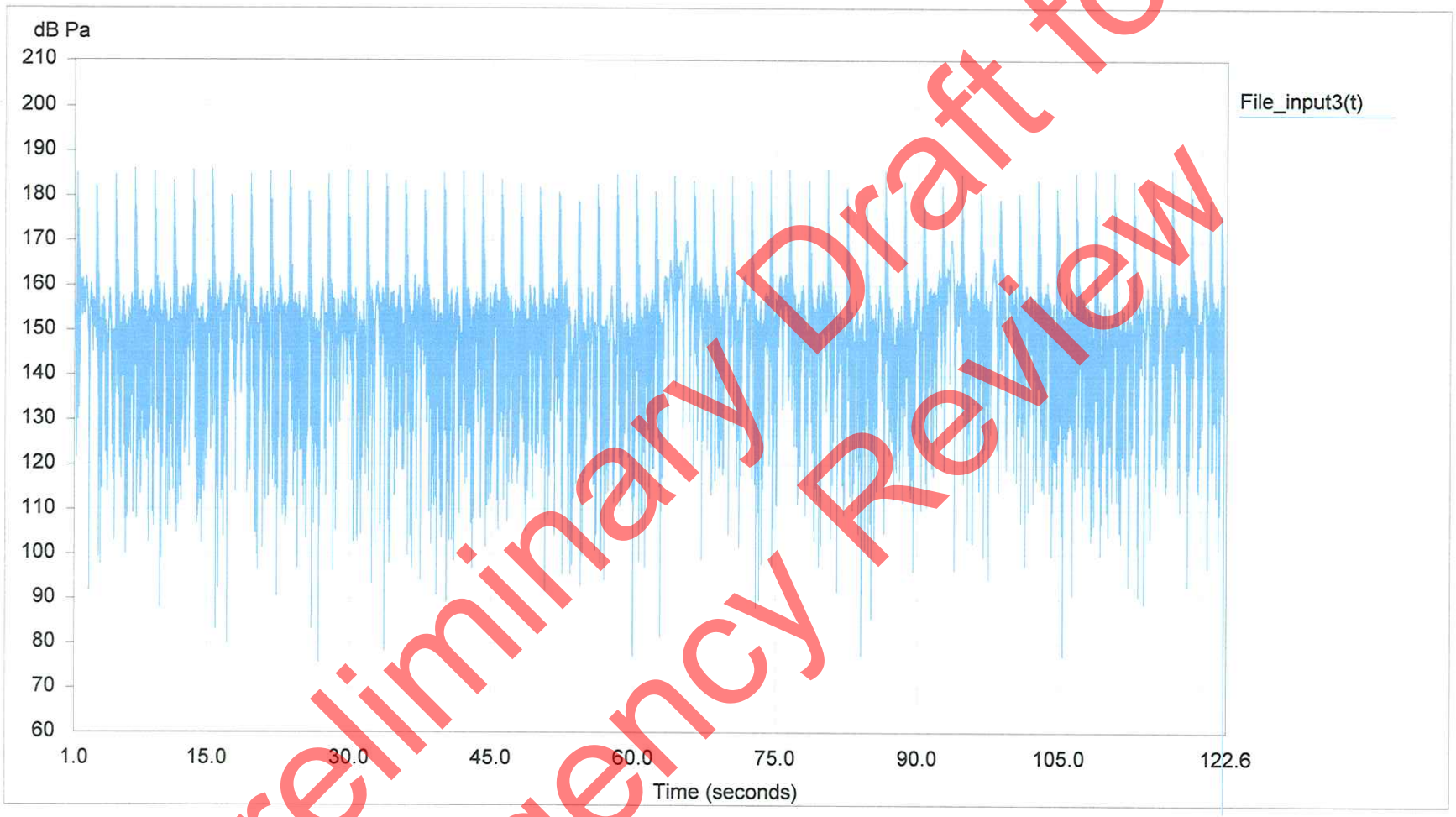

Preliminary Draft for Agency Review

USCG0012863/27

BNSF. July 15, 2008. 13:54

Pile 9-2-3, Bubble Curtain On (Two Rings)

Channel 3 (blue) is ~ 10 m from pile (4 m depth)

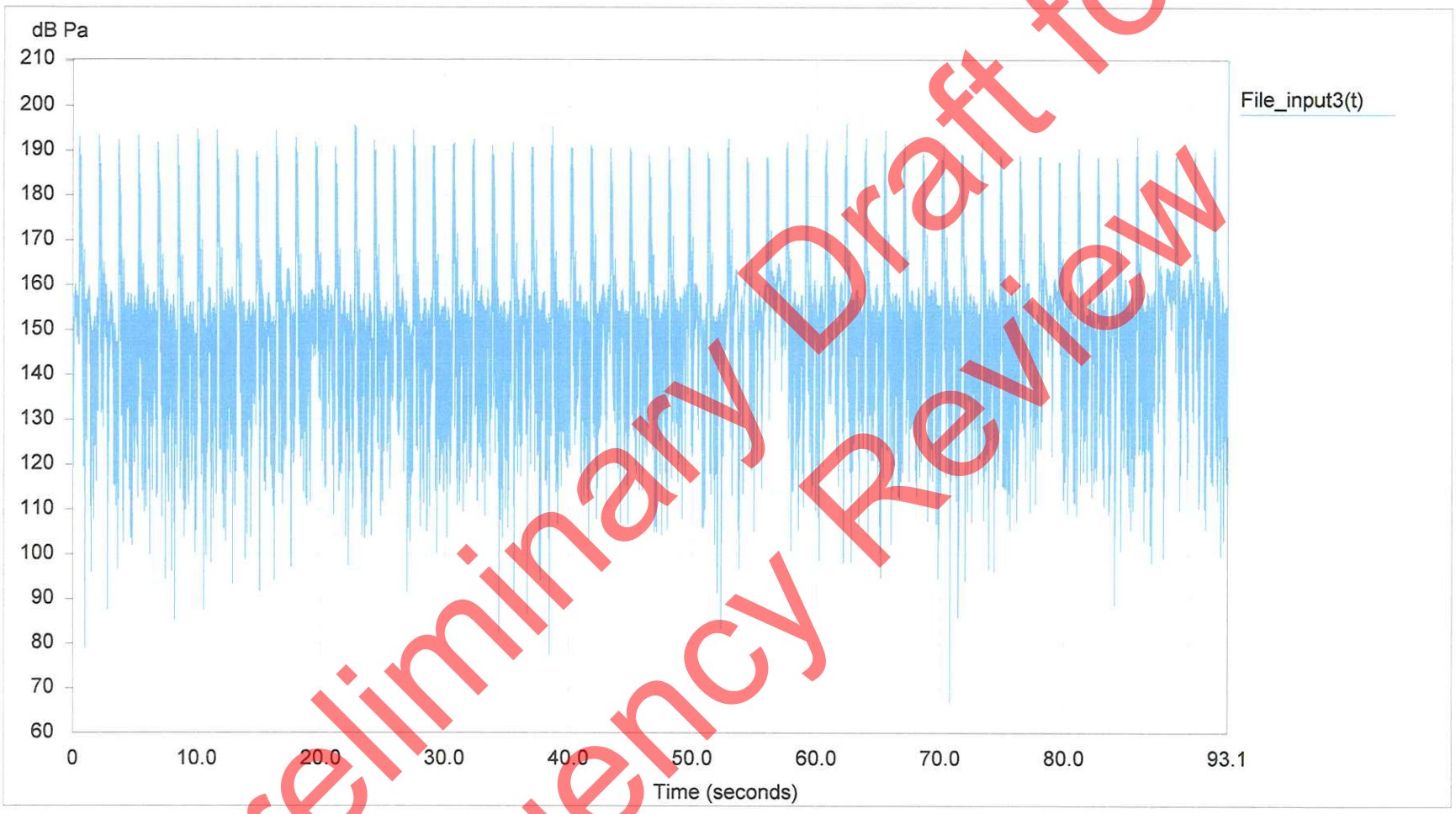

Preliminary Draft for Agency Review

USCG0012873/27

BNSF. July 16, 2008. 09:29

Pile 9-2-1, Bubble Curtain On (Two Rings)

Channel 2 (green) is ~ 1000 ft from pile (10ft depth), Channel 3 (blue) is ~ 1000 ft from pile (8 ft depth)

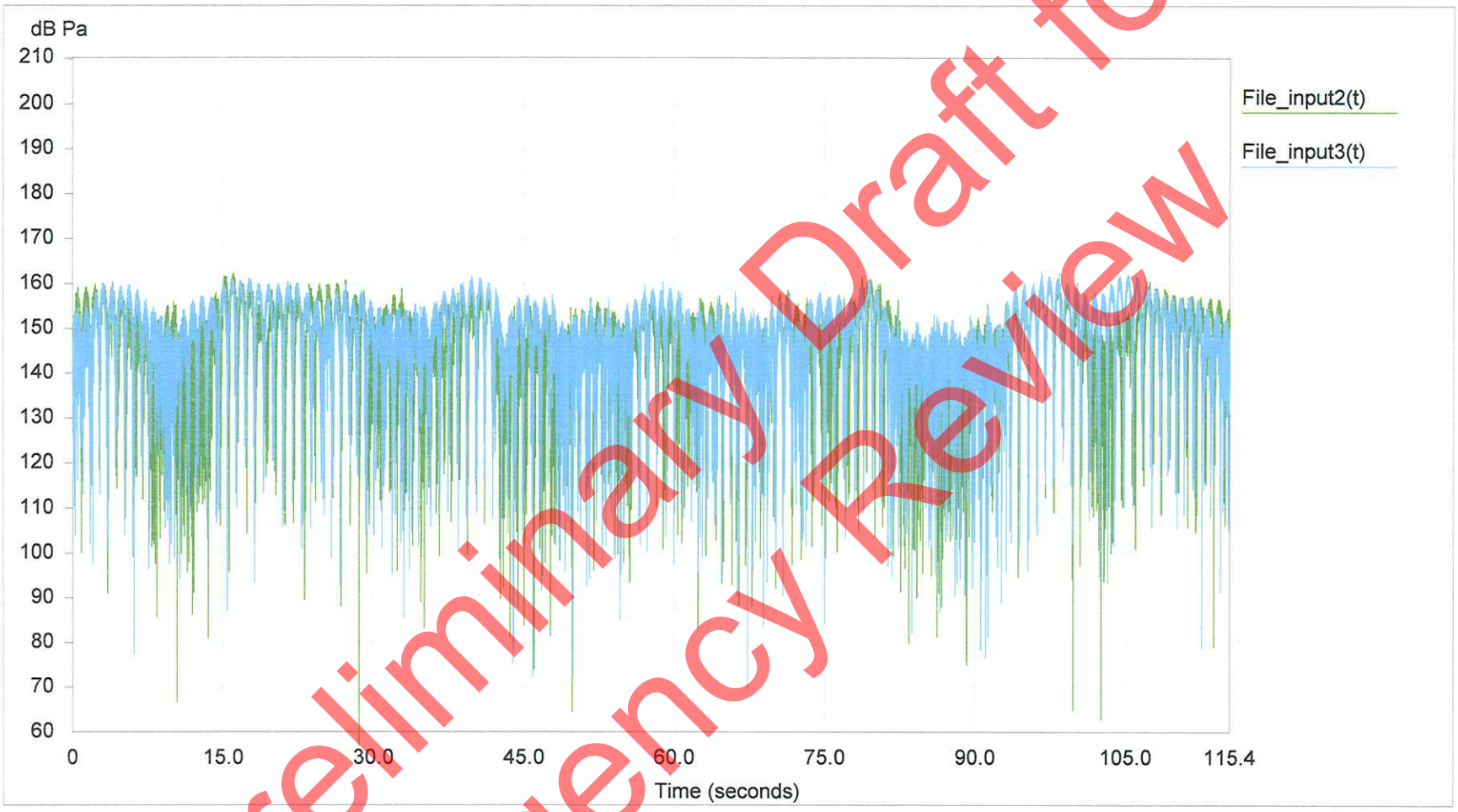

Preliminary Draft for Agency Review

USCG0012883/27

BNSF. July 16, 2008. 09:49

Pile 9-2-2, Bubble Curtain On (Two Rings)

Channel 2 (green) is ~ 500 ft from pile (10ft depth), Channel 3 (blue) is ~ 500 ft from pile (8 ft depth)

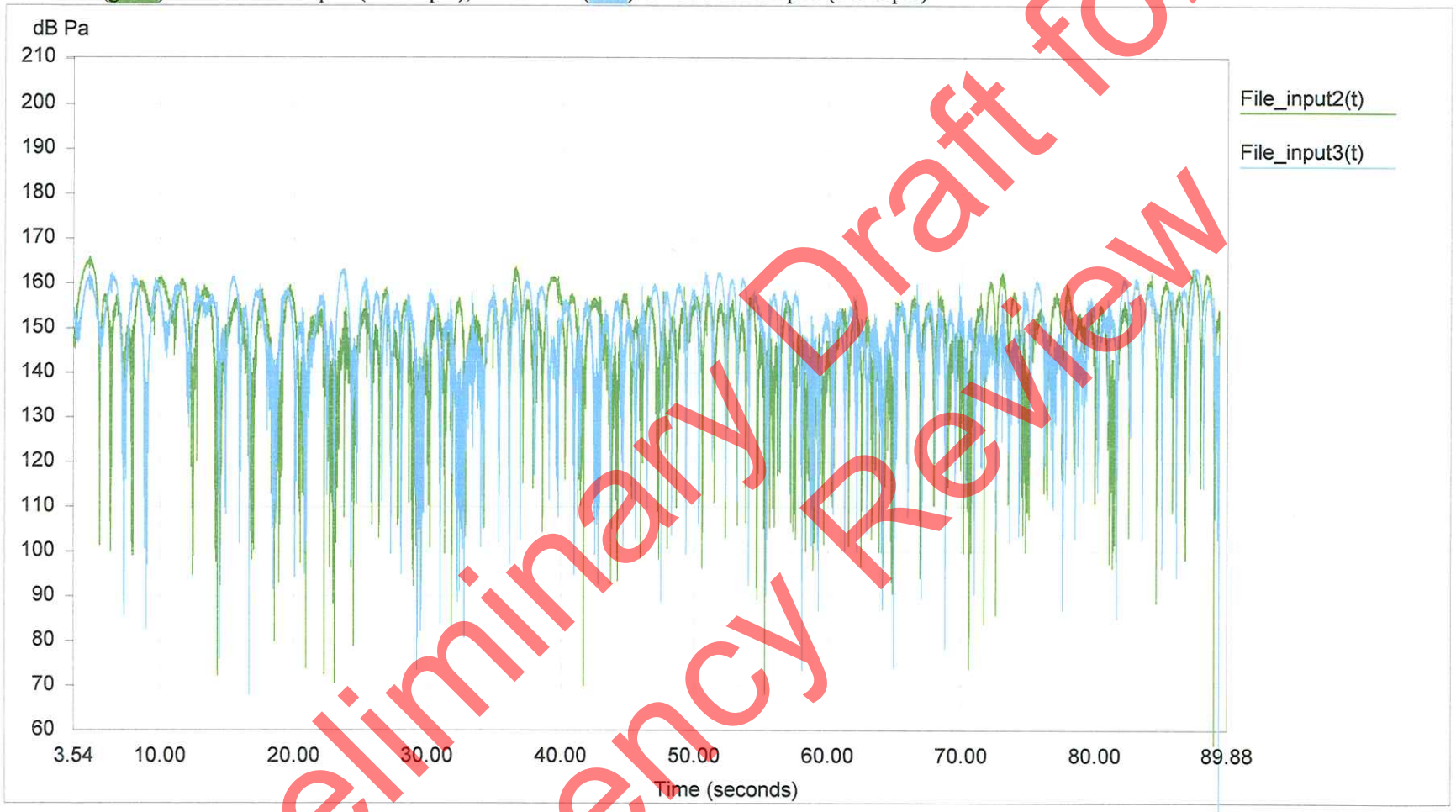

Preliminary Draft for Agency Review

BNSF. July 16, 2008. 11:49

Pile 9-2-1, Bubble Curtain On (Two Rings)

Channel 2 (green) is ~ 80 ft from pile (10 ft depth), Channel 3 (blue) is ~ 80 ft from pile (8 ft depth)

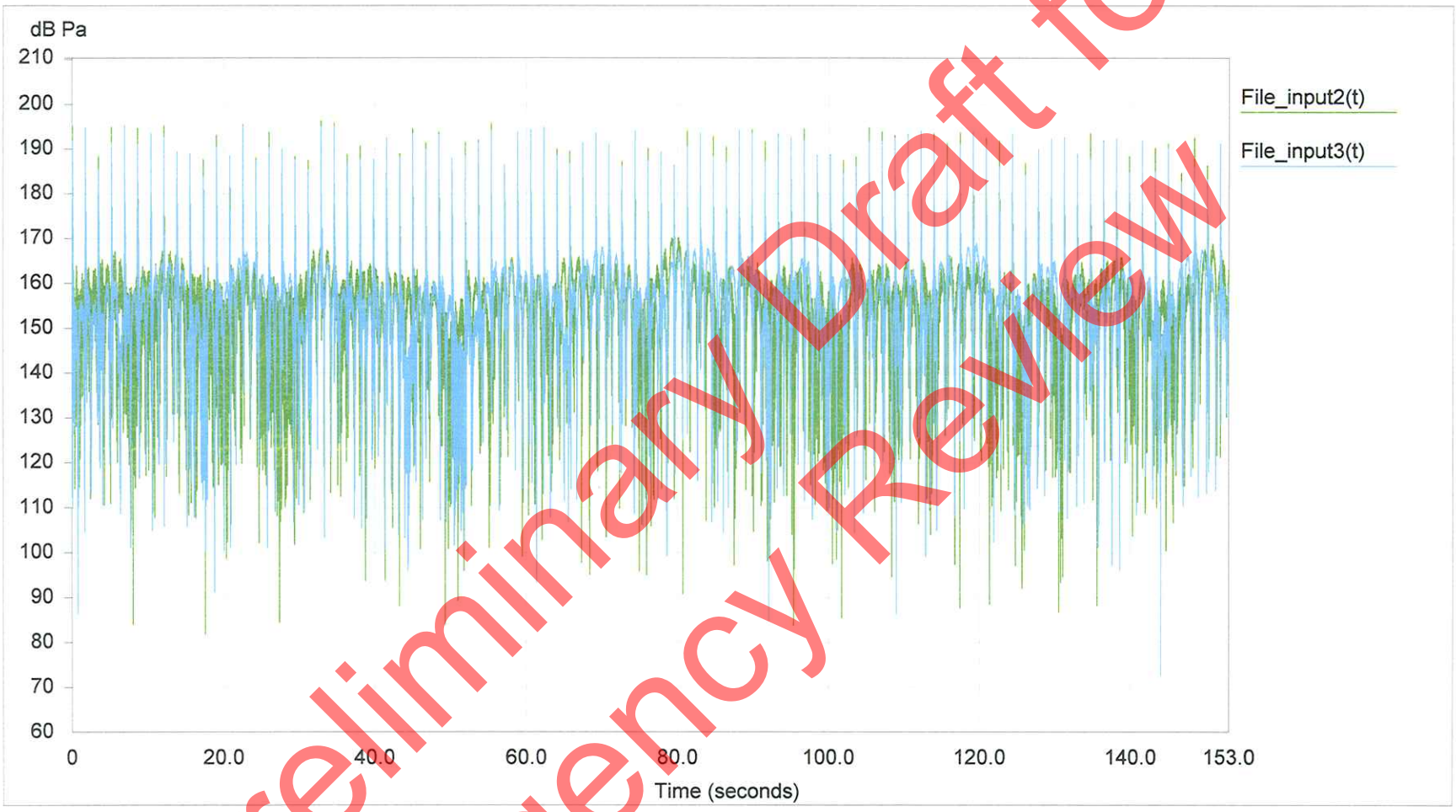

Preliminary Draft for Agency Review

USCG0012903/27

BNSF. July 16, 2008. 12:35

Pile 9-2-2, Bubble Curtain On (Two Rings)

Channel 2 (green) is ~ 10 m from pile (4 m depth), Channel 3 (blue) is ~ 10 m from pile (2 m depth)

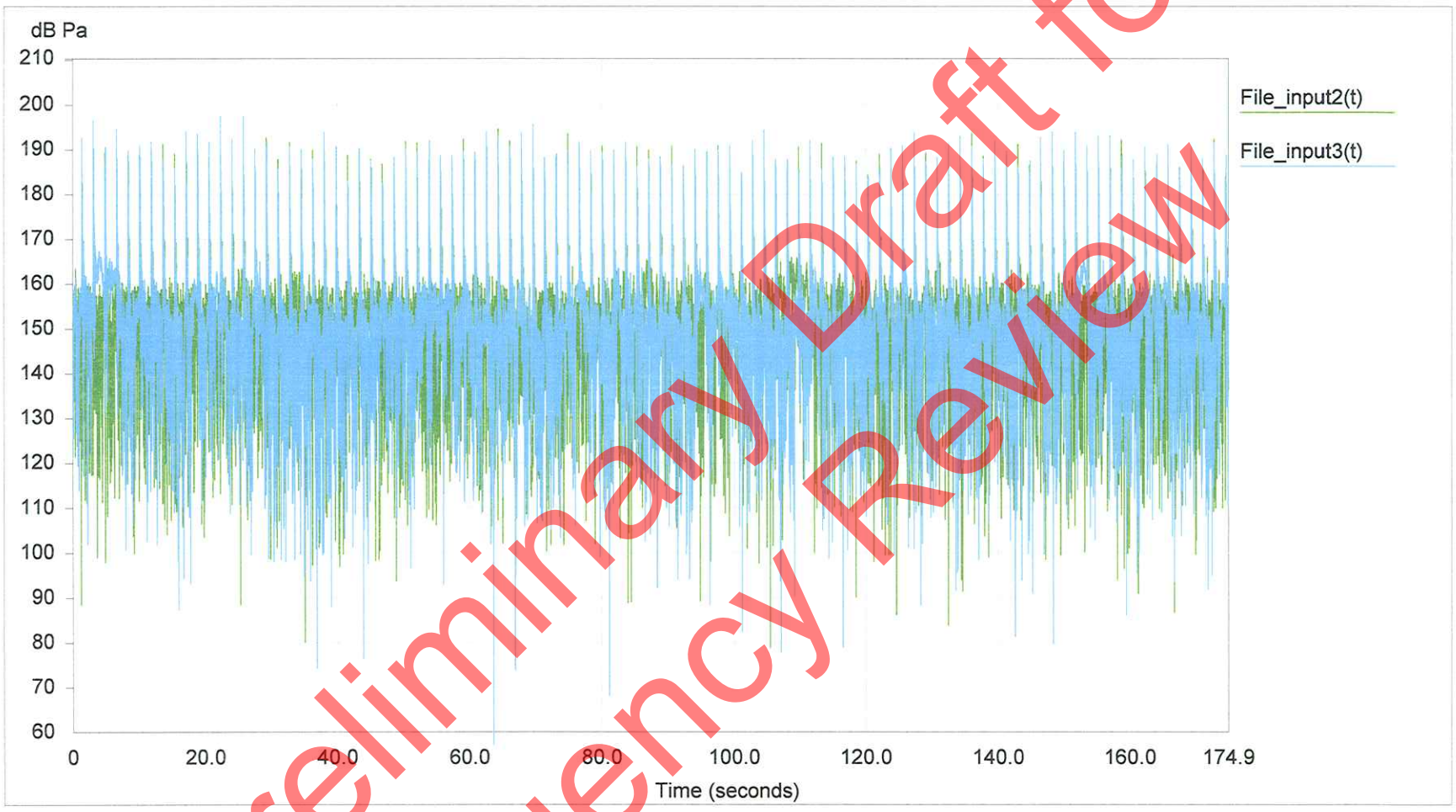

Preliminary Draft for Agency Review

USCG0012913/27

BNSF. July 21, 2008. 14:25

Bubble Curtain off between ~ 120 seconds and ~ 210 seconds (Two Rings)

Channel 2 (green) is ~ 10 m from pile (4 m depth), Channel 4 (red) is ~ 10 m from pile (2 m depth)

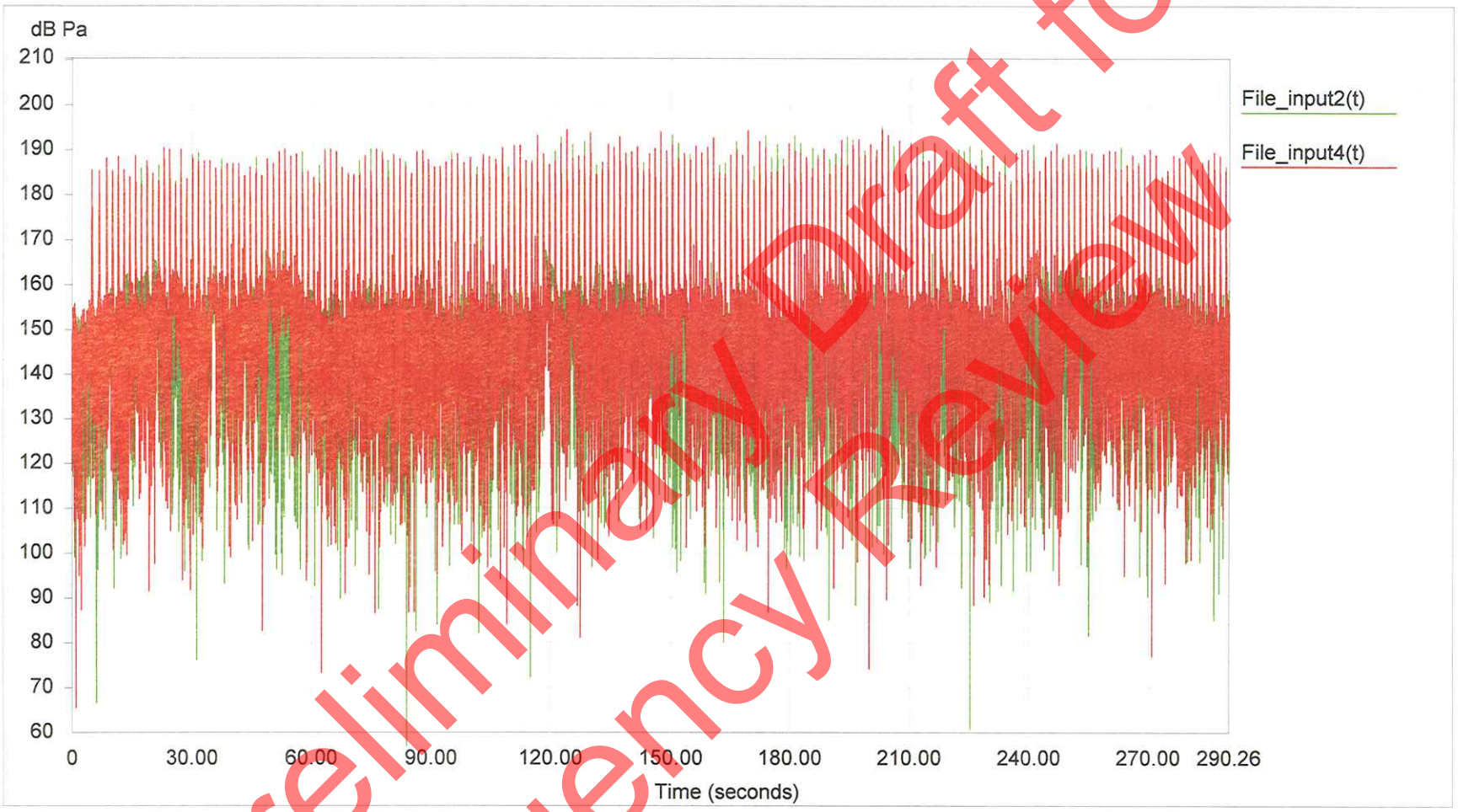

Preliminary Draft for Agency Review

BNSF. July 21, 2008. 14:41

Bubble Curtain off between ~145 seconds and 215 seconds (Two Rings)

Channel 2 (green) is ~ 10 m from pile (4 m depth), Channel 4 (red) is ~ 10 m from pile (2 m depth)

Preliminary Draft for Agency Review

BNSF. July 21, 2008. 14:51

Bubble Curtain off between ~200 seconds and 250 seconds (Two Rings)

Channel 2 (green) is ~ 10 m from pile (4 m depth), Channel 4 (red) is ~ 10 m from pile (2 m depth)

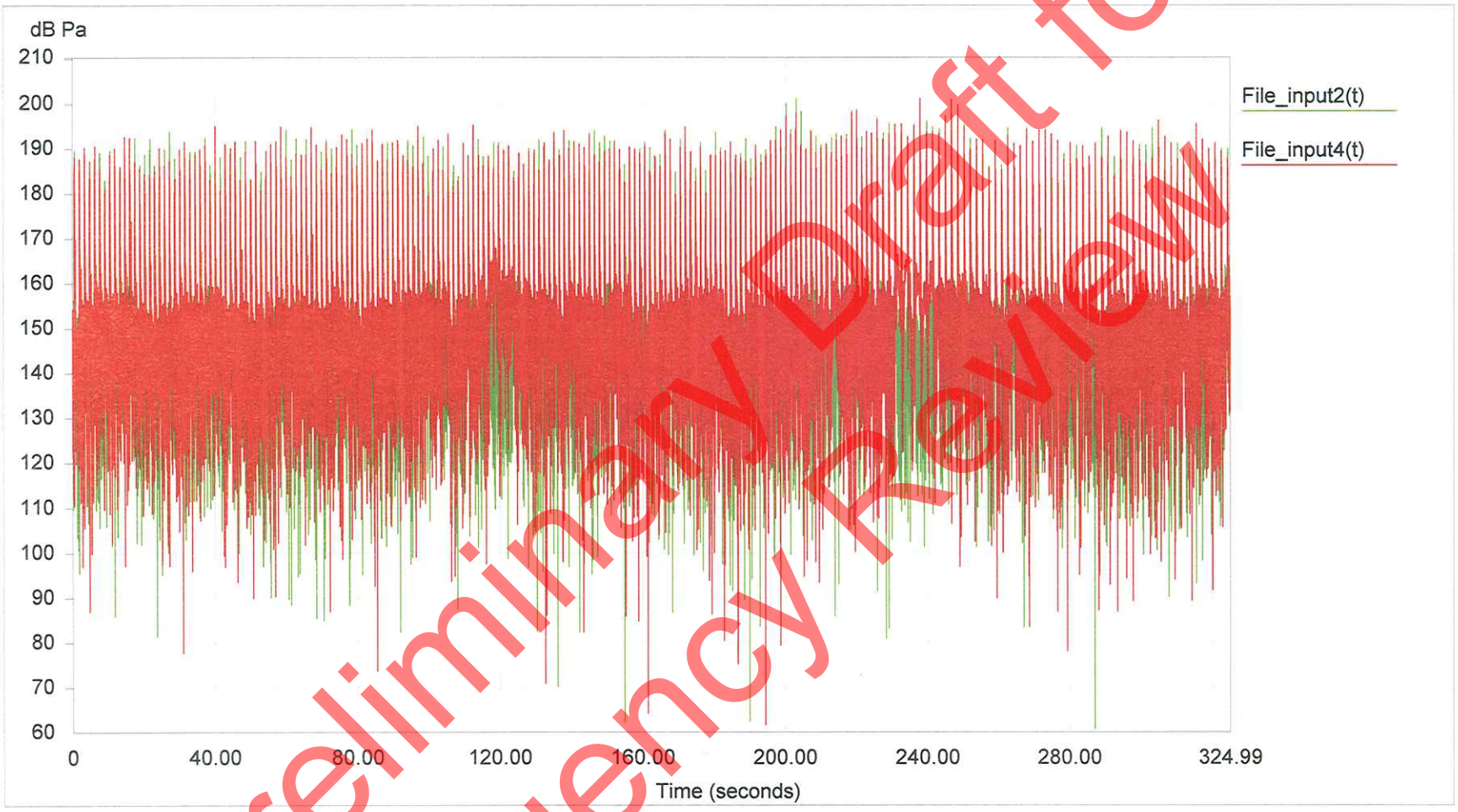

Preliminary Draft for Agency Review

BNSF. July 21, 2008. 14:51

Bubble Curtain off between ~200 seconds and 250 seconds (Two Rings)

Shown in Pascals

Channel 2 (green) is ~ 10 m from pile (4 m depth), Channel 4 (red) is ~ 10 m from pile (2 m depth)

Preliminary Draft for Agency Review

USCG0012953/27

BNSF. July 21, 2008. 14:51

Depiction of three sequential hammer blows in Pascals. Middle hammer blow selected for waveform analysis, expanded time-scale, bubble curtain on

Channel 4 (red) is ~ 10 m from pile

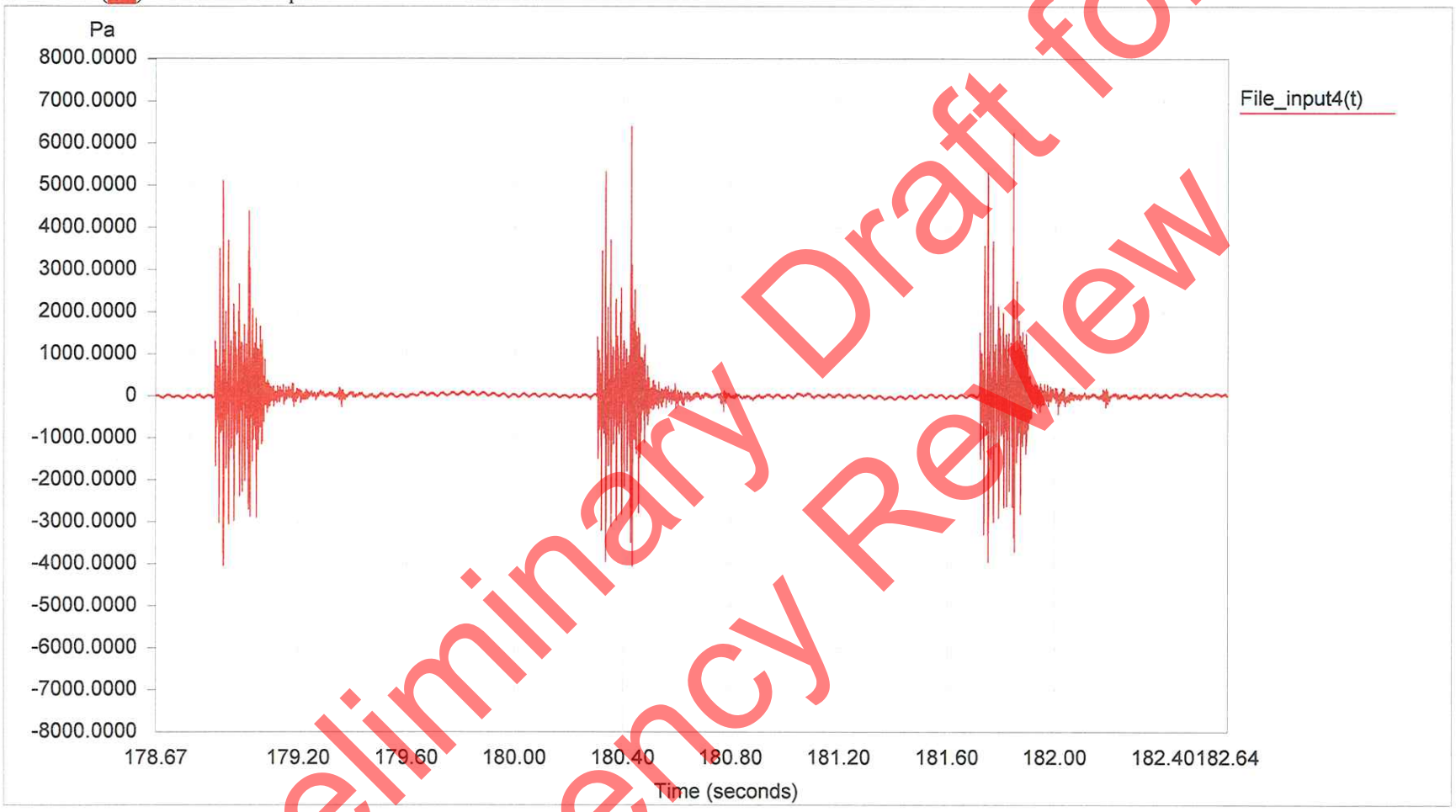

Preliminary Draft for Agency Review

BNSF. July 21, 2008. 14:51

Depiction of three sequential hammer blows in Decibels. Middle hammer blow selected for waveform analysis, expanded time-scale, bubble curtain on

Channel 4 (red) is ~ 10 m from pile

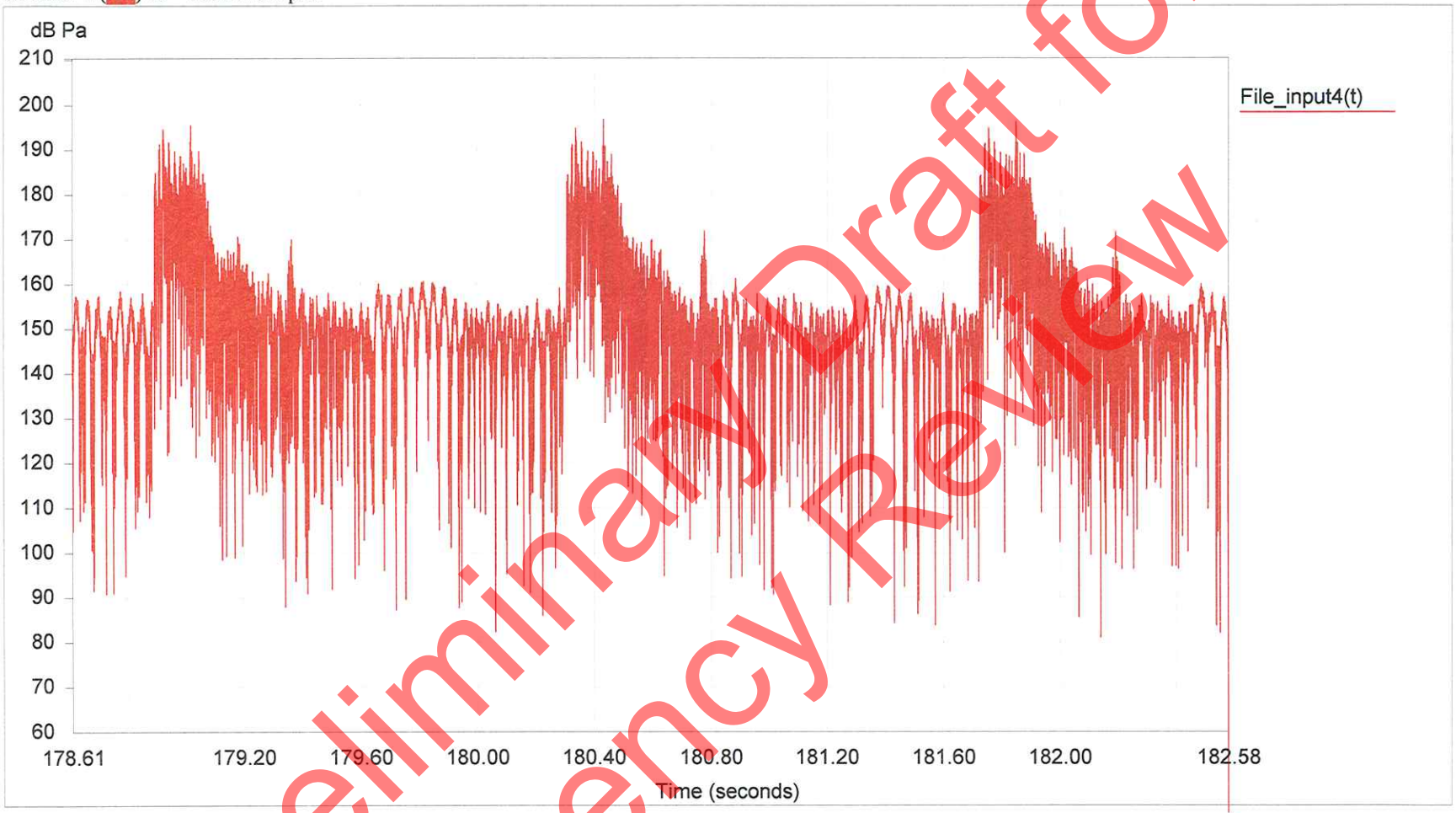

Preliminary Draft for Agency Review

BNSF. July 21, 2008. 14:51

Single hammer blow selected for waveform analysis, expanded time-scale (pulse duration ~ 200 ms), bubble curtain on
Shown in Pascals

Channel 4 (red) is ~ 10 m from pile

Preliminary Draft for Agency Review

BNSF. July 21, 2008. 14:51

Single hammer blow selected for waveform analysis, expanded time-scale (pulse duration ~ 200 ms), bubble curtain on
Shown in Decibels

Channel 4 (red) is ~ 10 m from pile

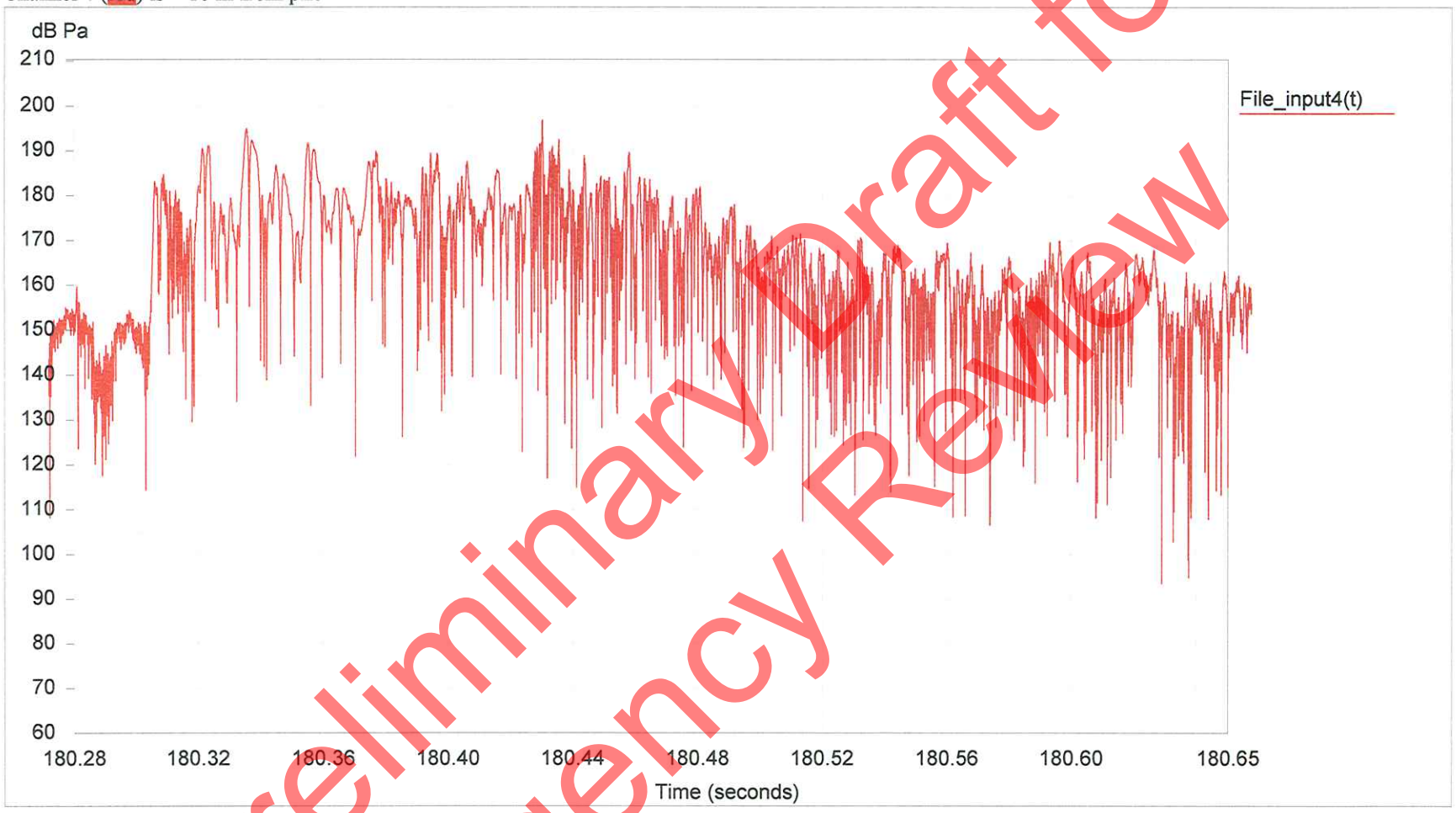

Preliminary Draft for Agency Review

BNSF. July 24, 2008. 08:43

Background Sound Pressure Level Measurement

Channel 2 (green) and Channel 3 (blue) adjacent to work barge at ~ 10 ft depth.

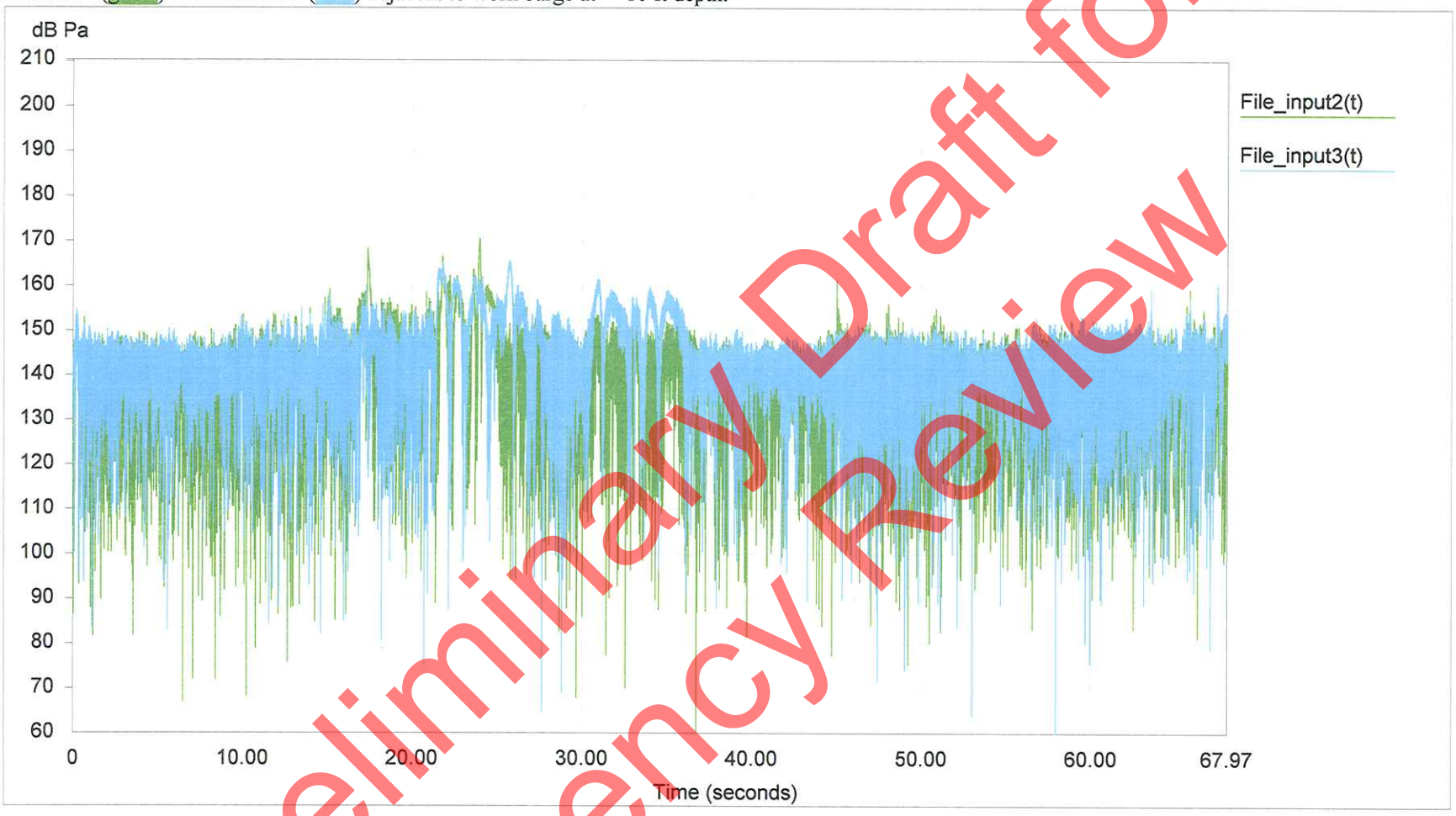

Preliminary Draft for Agency Review

BNSF. July 24, 2008. 09:13

Pile 12-2-1, Bubble curtain off between ~ 10 seconds and ~ 40 seconds (Two Rings)
Airborne Sound Pressure ~ 109 dBa

Channel 2 (green) is ~ 10 m from pile (4 m depth), Channel 3 (blue) is ~ 10 m from pile (2 m depth)

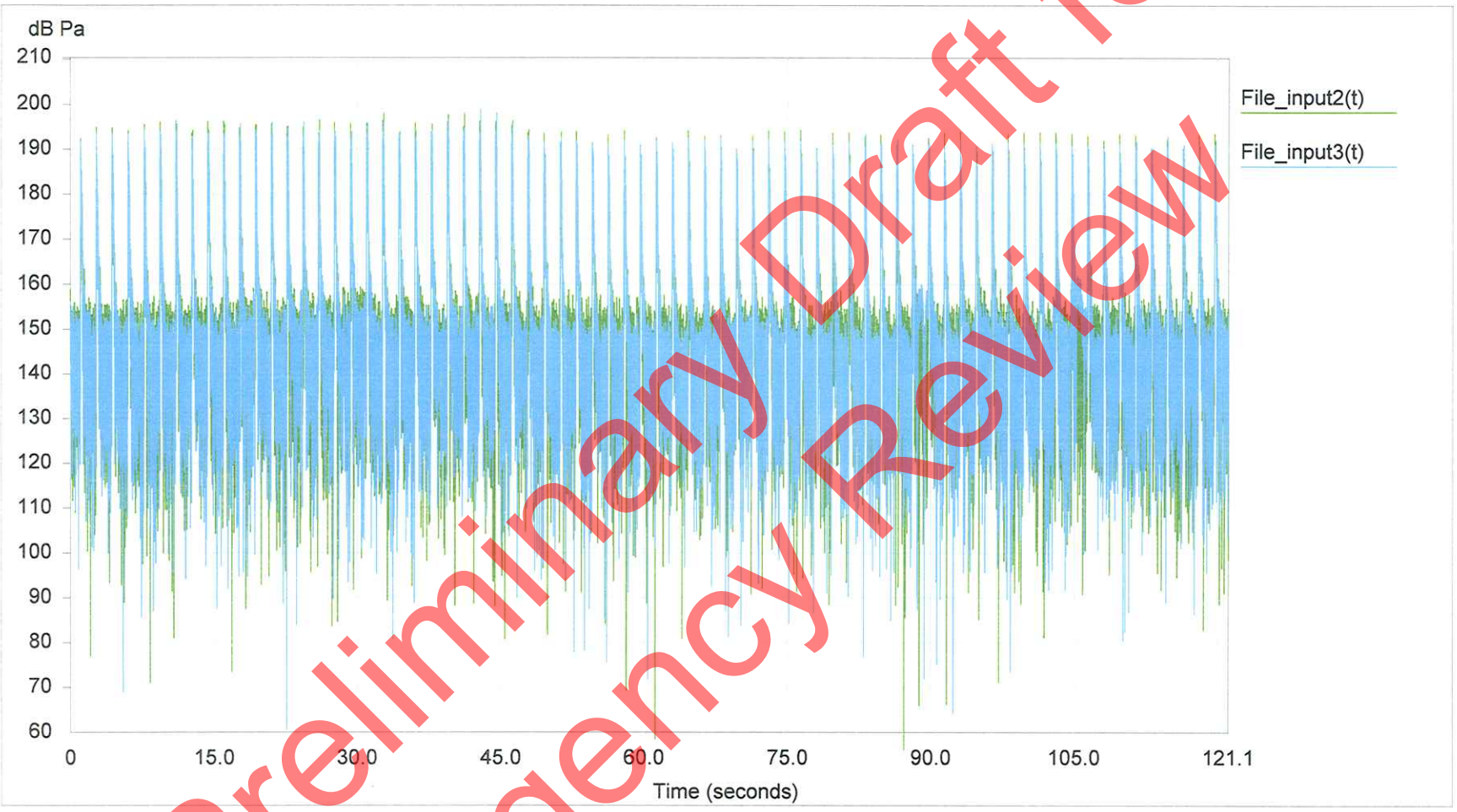

Preliminary Draft for Agency Review

BNSF. July 24, 2008. 09:38

Pile 12-2-1, Bubble Curtain off for ~ first 30 seconds (Two Rings)

Channel 2 (green) is ~ 10 m from pile (4 m depth), Channel 3 (blue) is ~ 10 m from pile (2 m depth)

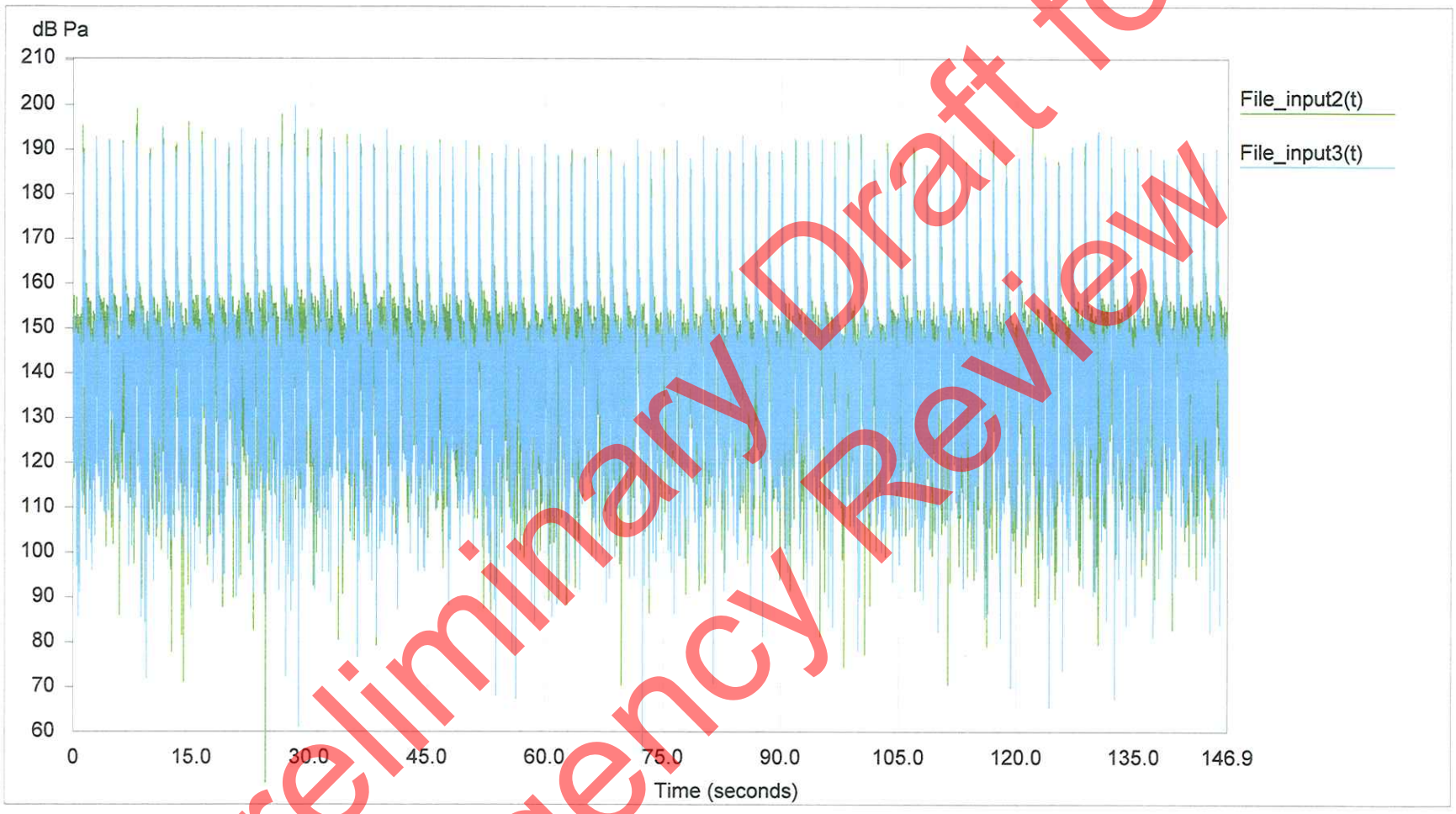

Preliminary Draft for Agency Review

USCG0013023/27

BNSF. July 24, 2008. 12:13

Pile 12-1-2, Bubble Curtain off for ~ first 30 seconds (Two Rings)

Channel 2 (green) is ~ 10 m from pile (4 m depth), Channel 3 (blue) is ~ 10 m from pile (2 m depth)

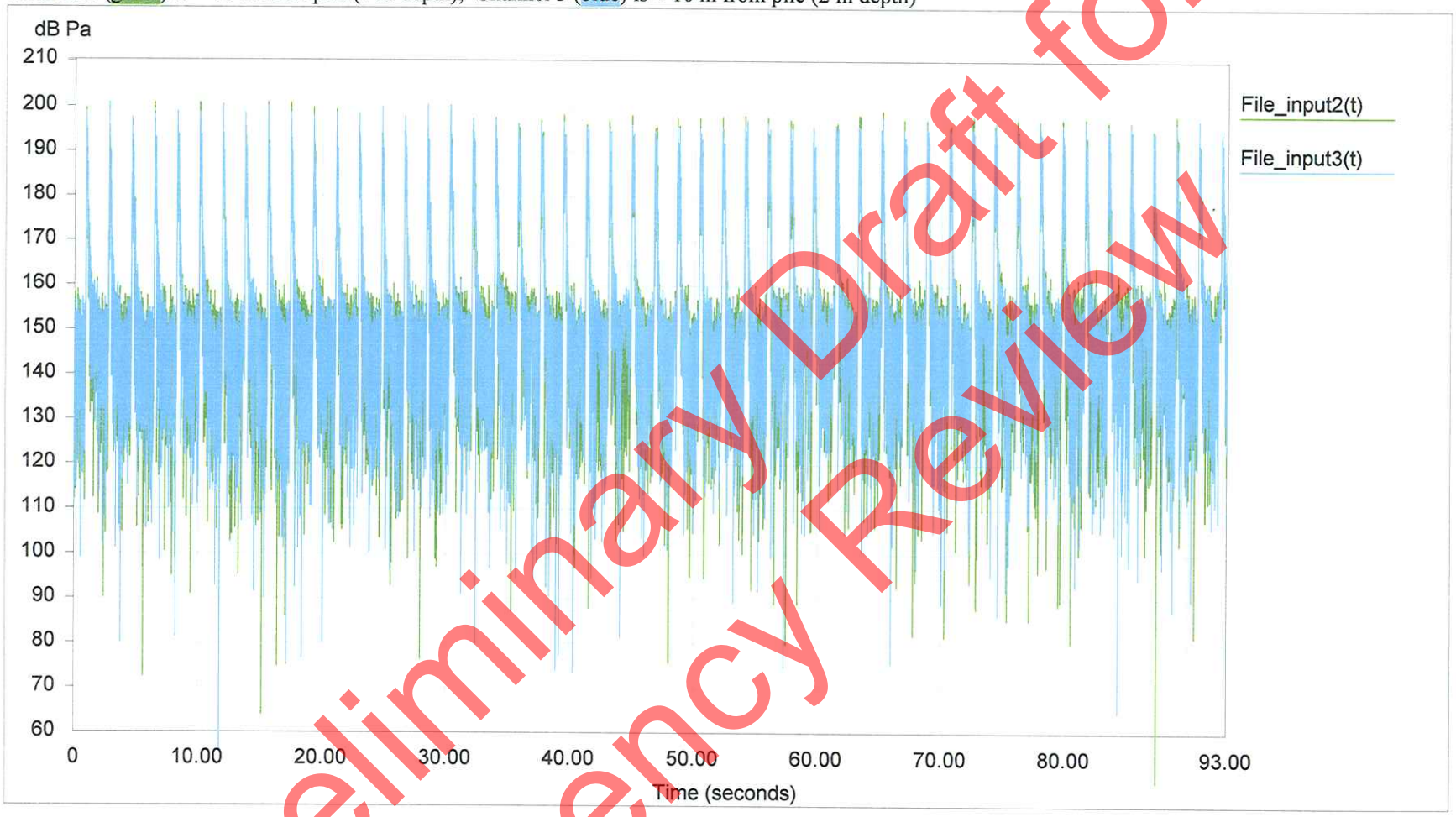

Preliminary Draft for Agency Review

USCG0013033/27

BNSF. July 24, 2008. 12:44

Pile 12-1-2, Bubble Curtain off for ~ first 30 seconds (Two Rings)

Channel 2 (green) is ~ 10 m from pile (4 m depth), Channel 3 (blue) is ~ 10 m from pile (2 m depth)

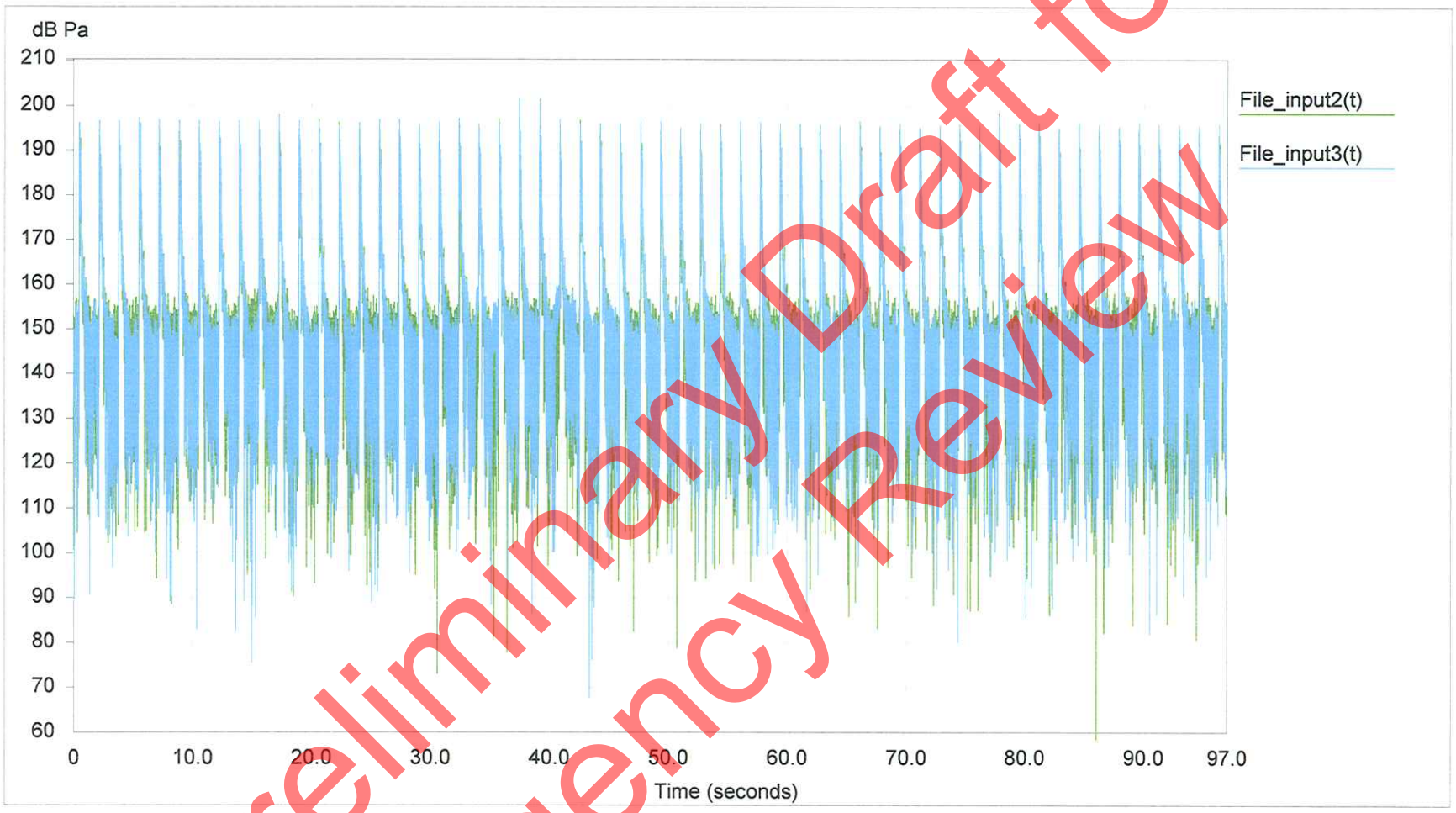

Preliminary Draft for Agency Review

USCG0013043/27

BNSF. July 25, 2008. 10:53

Pile 12-2-2, Bubble Curtain off for ~ first 45 seconds (Two Rings)

Airborne Sound Pressure ~ 108 dBa

Channel 2 (green) is ~ 10 m from pile (4 m depth), Channel 3 (blue) is ~ 10 m from pile (2 m depth)

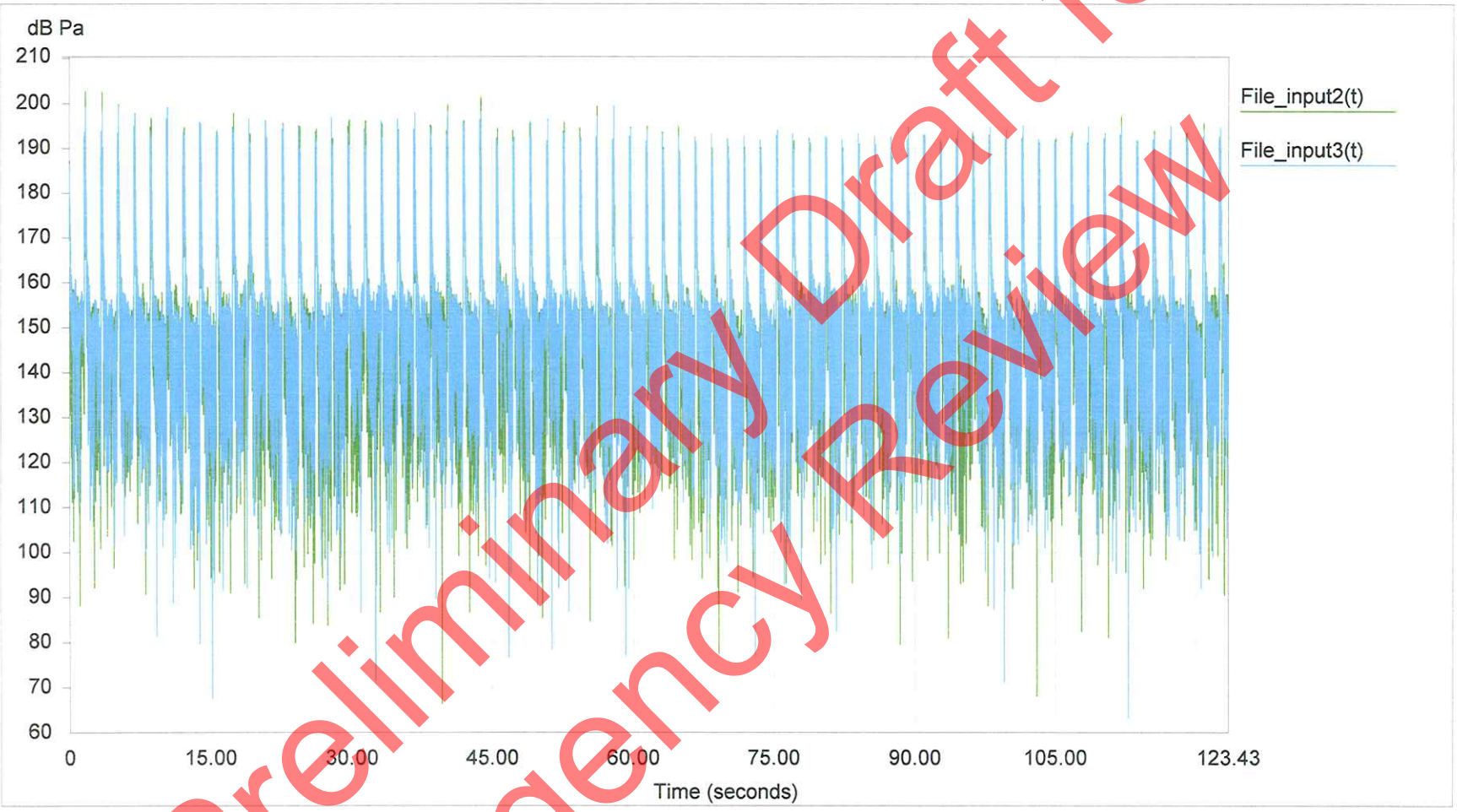

Preliminary Draft for Agency Review

USCG0013053/27

BNSF. July 25, 2008. 11:21

Pile 12-2-2, Bubble Curtain off for ~ first 35 seconds (Two Rings)

Channel 2 (green) is ~ 10 m from pile (4 m depth), Channel 3 (blue) is ~ 10 m from pile (2 m depth)

Preliminary Draft for Agency Review

BNSF. July 25, 2008. 11:27

Pile 12-2-2, Bubble Curtain off for ~ first 35 seconds (Two Rings)
Airborne Sound Pressure ~ 110 dBa

Channel 2 (green) is ~ 10 m from pile (4 m depth), Channel 3 (blue) is ~ 10 m from pile (2 m depth)

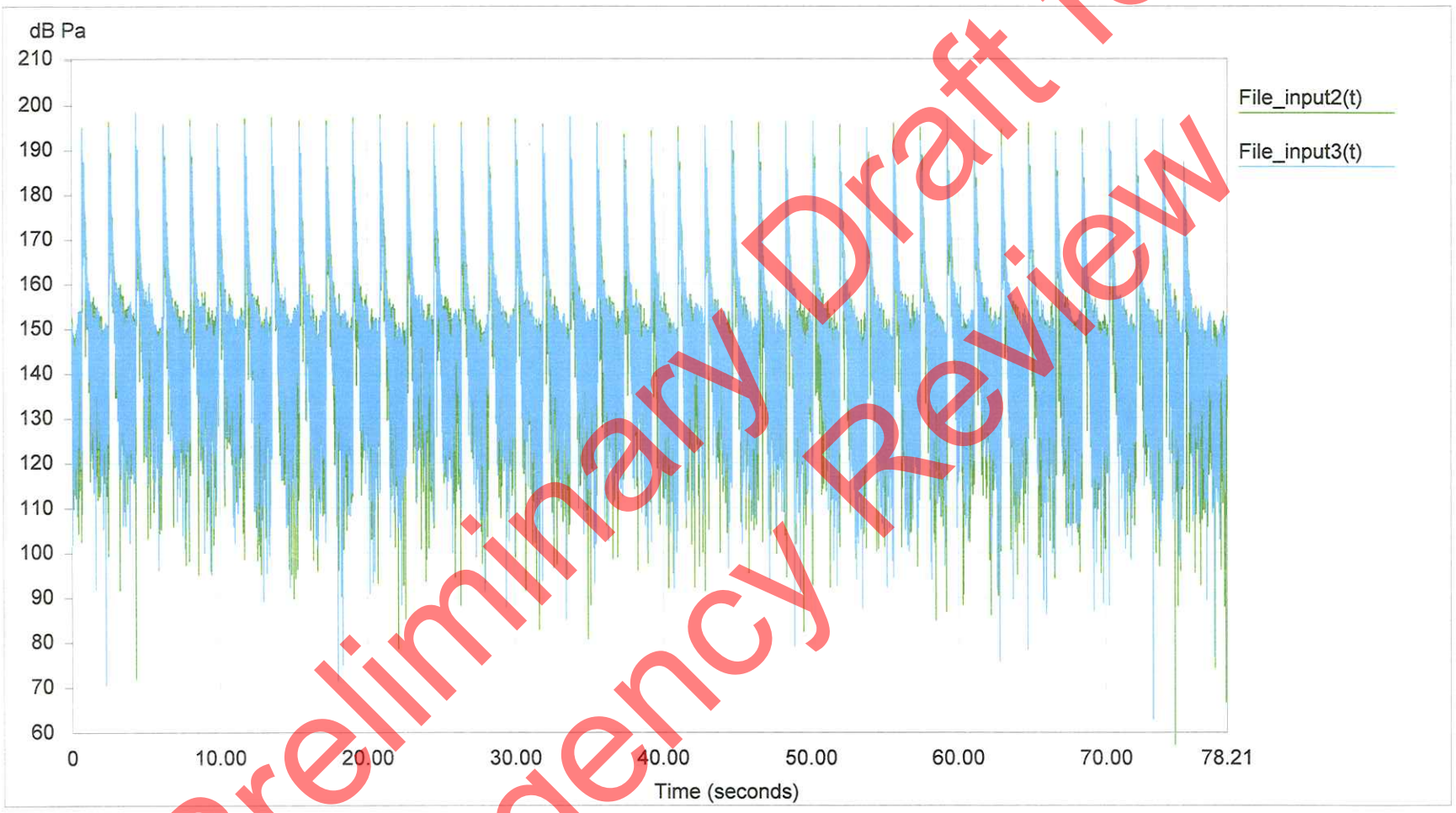

Preliminary Draft for Agency Review

Appendix B

Waveform Analyses

Preliminary Draft for Agency Review

USCG0013073/27

BNSF. July 21, 2008. 14:51. Bubble Curtain Turned Off

Figure a. Waveform

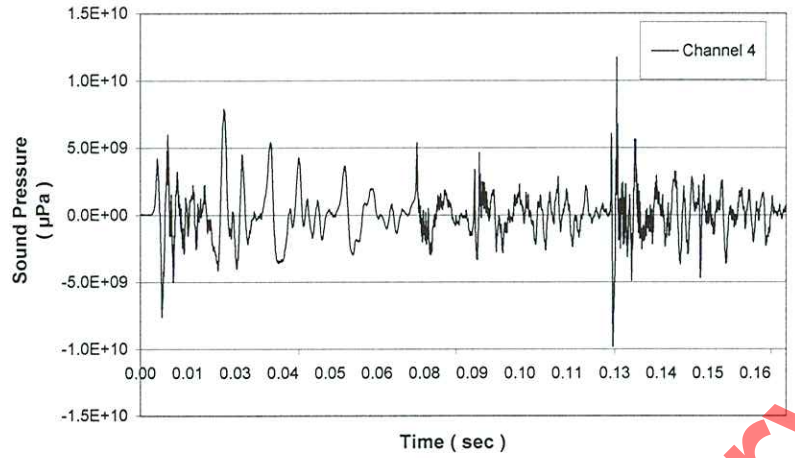

Figure b. Narrow Band Frequency Spectra

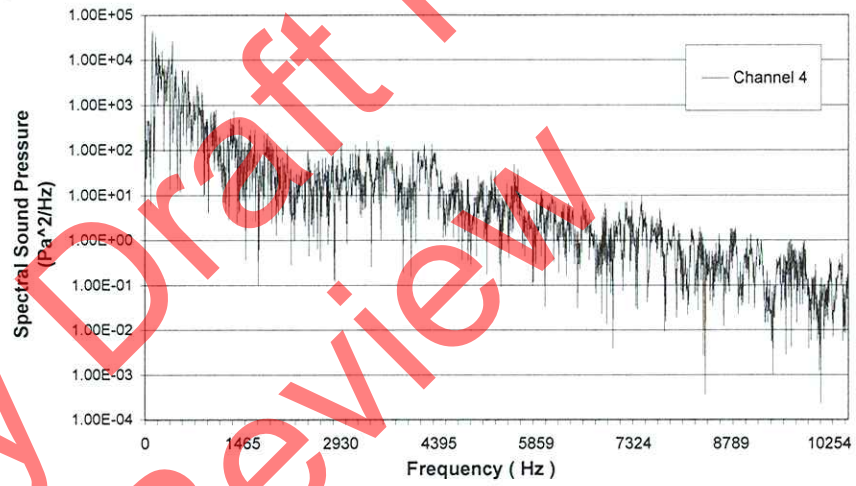

Figure c. Accumulation of Sound Energy

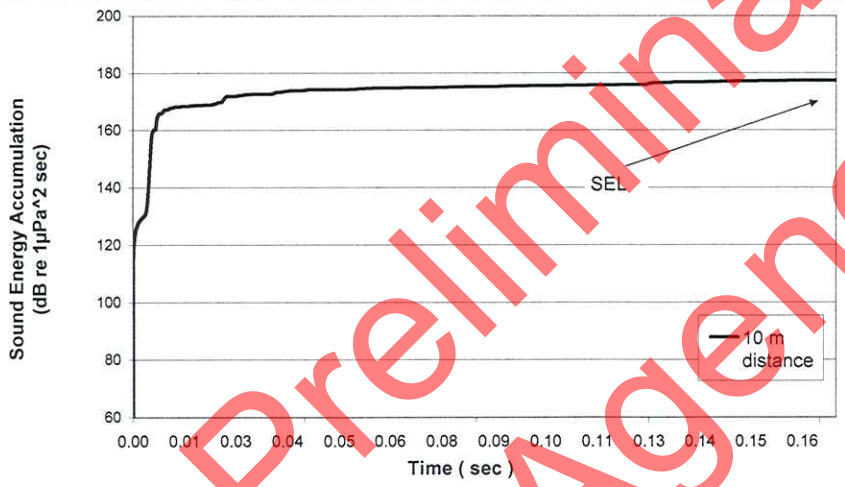

Figure d. Sound Pressure and Sound Energy Levels

Signal Analysis Sound Pressure / Energy Levels

10 m distance	Peak, dB	$RMS_{90\%}$*, dB	SEL, dB
Channel 4	201	185	177

*Impulse averaged over 90% of accumulated energy (5% to 95%)

Preliminary Draft for Agency Review

BNSF. July 21, 2008. 14:51. Bubble Curtain Turned On

Figure a. Waveform

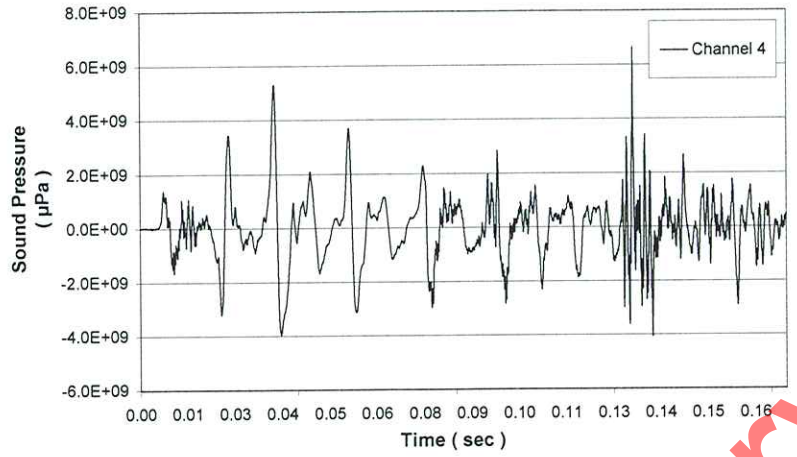

Figure b. Narrow Band Frequency Spectra

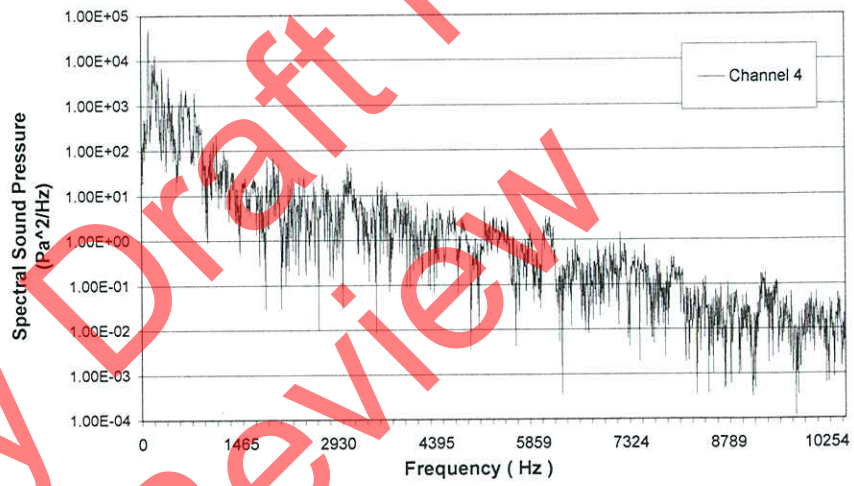

Figure c. Accumulation of Sound Energy

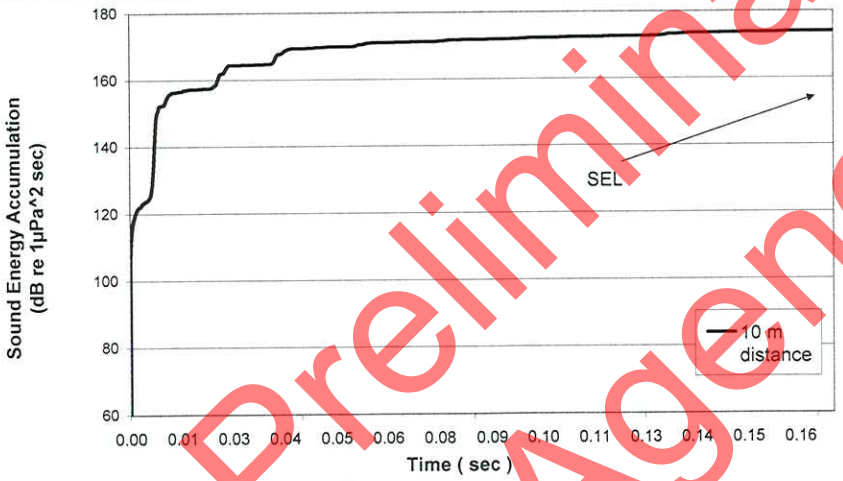

Figure d. Sound Pressure and Sound Energy Levels

Signal Analysis Sound Pressure / Energy Levels

10 m distance	Peak, dB	RMS90%*, dB	SEL, dB
Channel 4	196	182	174

*Impulse averaged over 90% of accumulated energy (5% to 95%)

Preliminary Draft for Agency Review

BNSF. July 24, 2008. 09:38. Pile 12-2-1, Bubble Curtain Turned Off

Figure a. Waveform

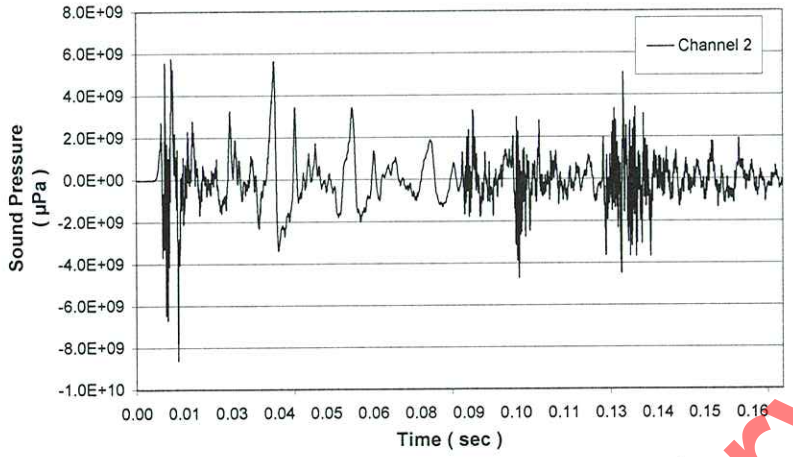

Figure b. Narrow Band Frequency Spectra

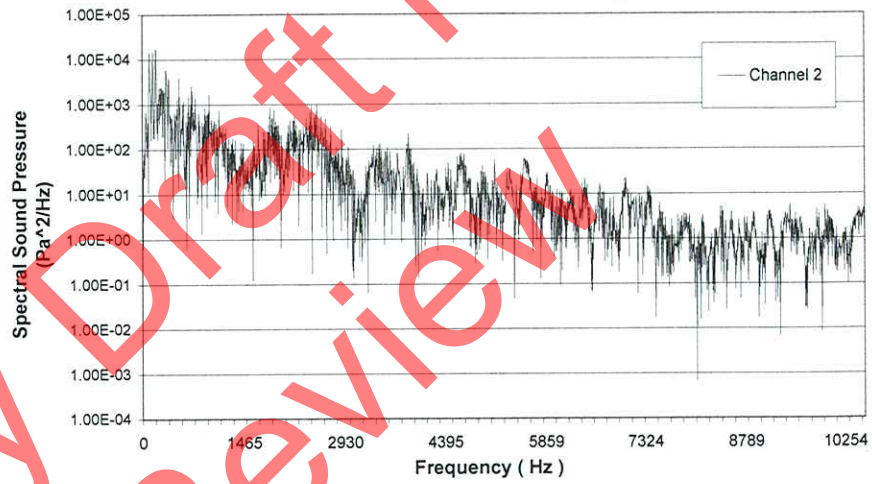

Figure c. Accumulation of Sound Energy

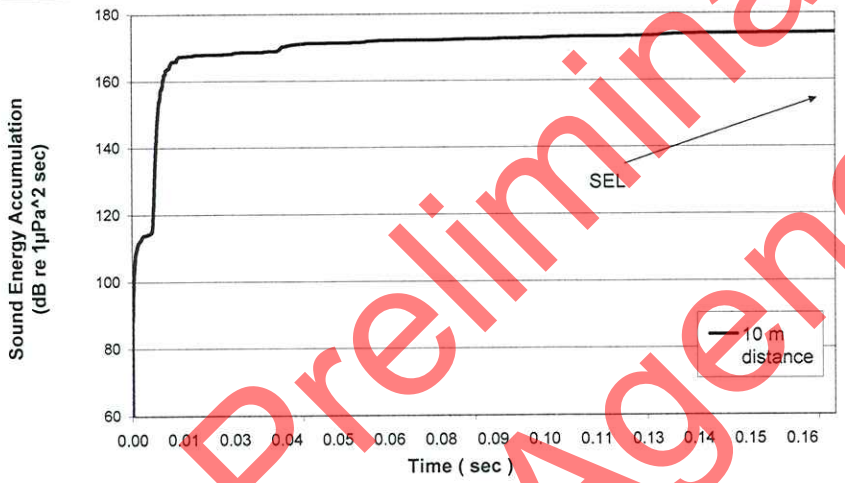

Figure d. Sound Pressure and Sound Energy Levels

Signal Analysis Sound Pressure / Energy Levels

Pile 12-2-1 - 10 m distance	Peak, dB	RMS90%*, dB	SEL, dB
Channel 2	199	183	174

*Impulse averaged over 90% of accumulated energy (5% to 95%)

Preliminary Draft for Agency Review

BNSF. July 24, 2008. 09:38. Pile 12-2-1, Bubble Curtain Turned On

Figure a. Waveform

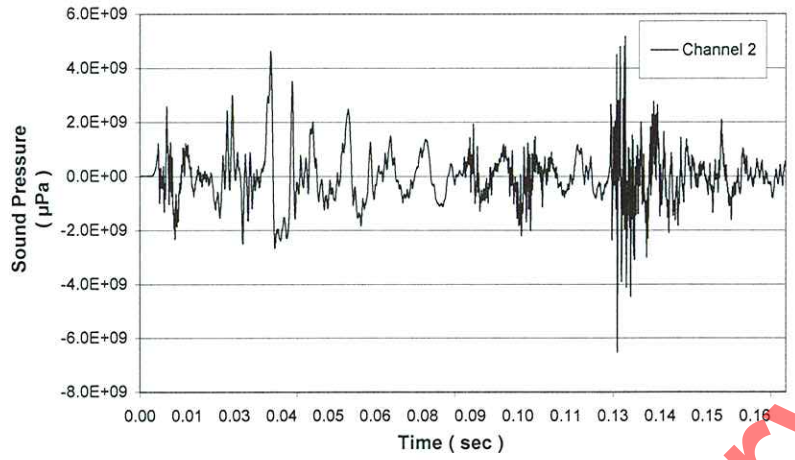

Figure b. Narrow Band Frequency Spectra

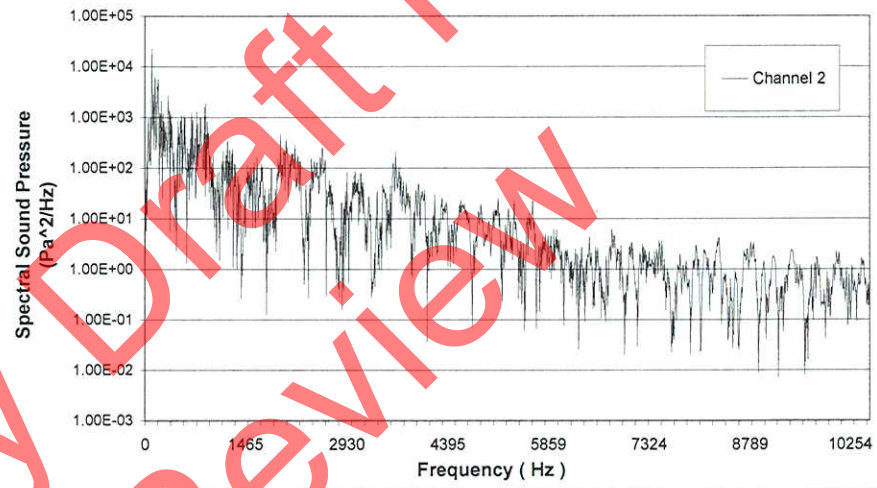

Figure c. Accumulation of Sound Energy

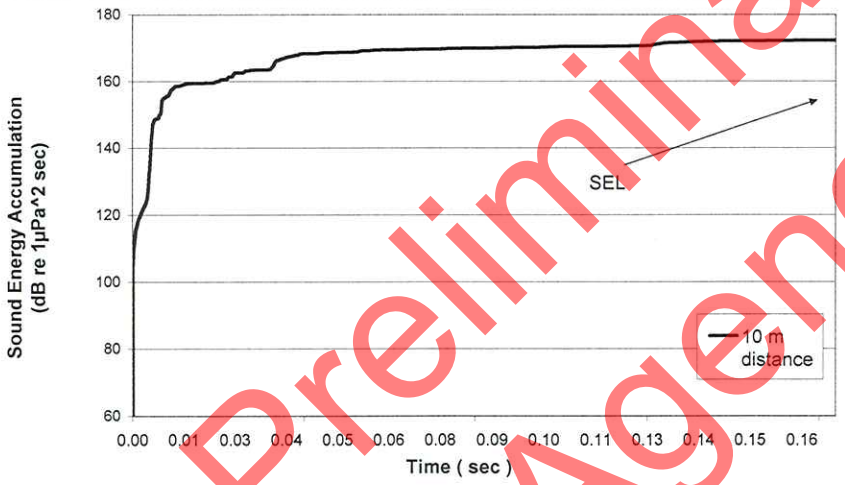

Figure d. Sound Pressure and Sound Energy Levels

Signal Analysis Sound Pressure / Energy Levels

Pile 12-2-1 - 10 m distance	Peak, dB	$RMS_{90\%}$*, dB	SEL, dB
Channel 2	196	181	172

*Impulse averaged over 90% of accumulated energy (5% to 95%)

Preliminary Draft for Agency Review

BNSF. July 24, 2008. 12:13. Pile 12-1-2, Bubble Curtain Turned Off

Figure a. Waveform

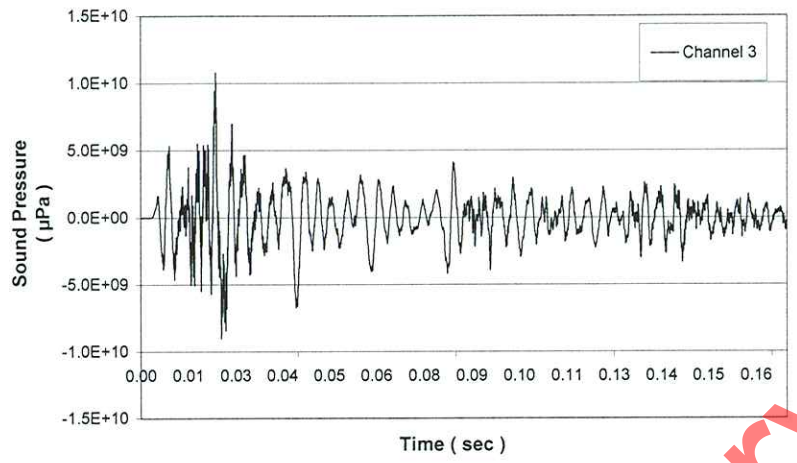

Figure b. Narrow Band Frequency Spectra

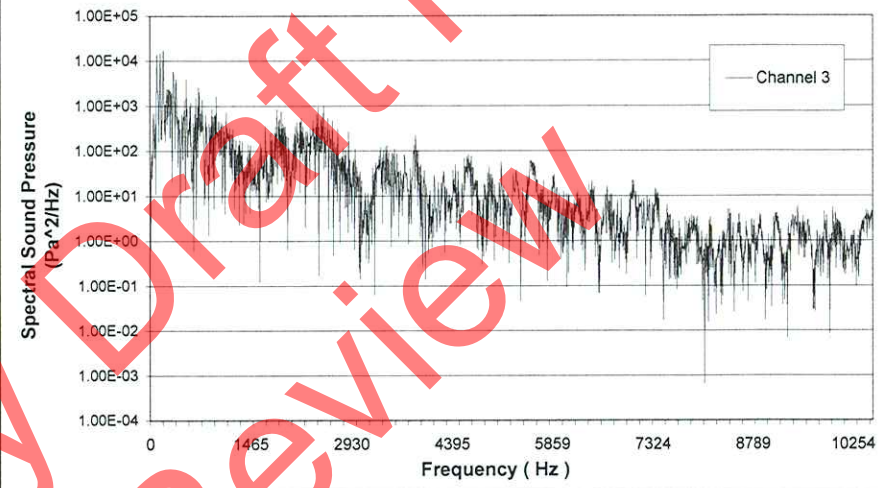

Figure c. Accumulation of Sound Energy

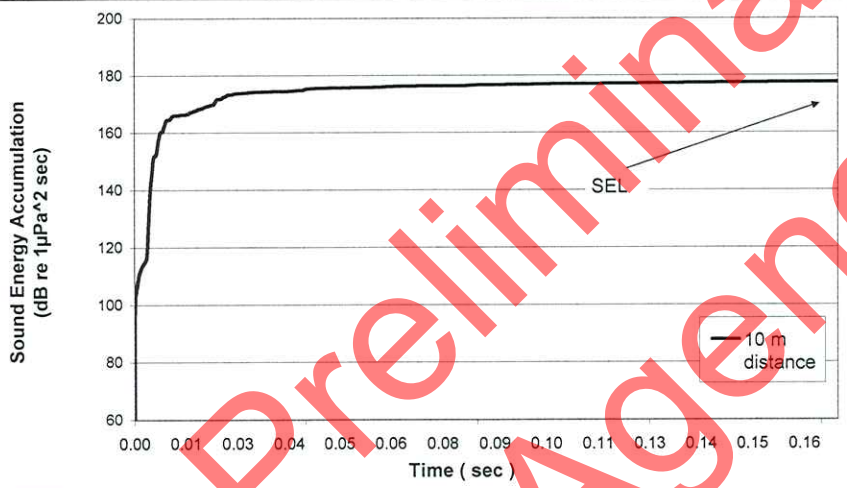

Figure d. Sound Pressure and Sound Energy Levels

Signal Analysis Sound Pressure / Energy Levels

Pile 12-1-2 - 10 m distance	Peak, dB	$RMS_{90\%}$*, dB	SEL, dB
Channel 3	201	186	178

*Impulse averaged over 90% of accumulated energy (5% to 95%)

Preliminary Draft for Agency Review

BNSF. July 24, 2008. 12:13. Pile 12-1-2, Bubble Curtain Turned On

Figure a. Waveform

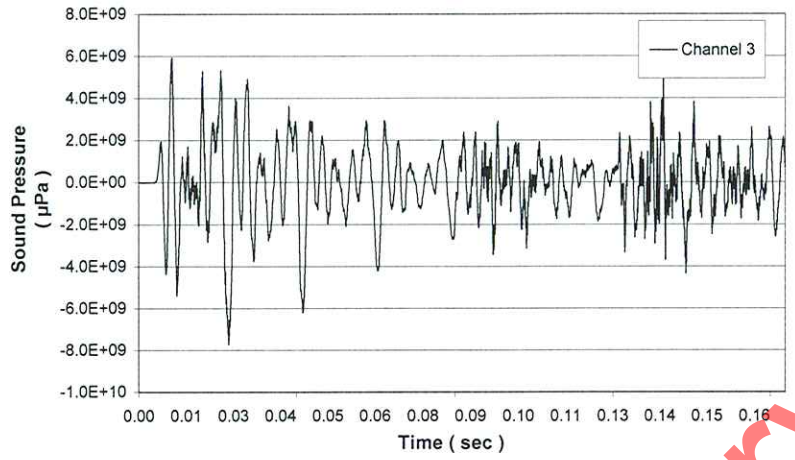

Figure b. Narrow Band Frequency Spectra

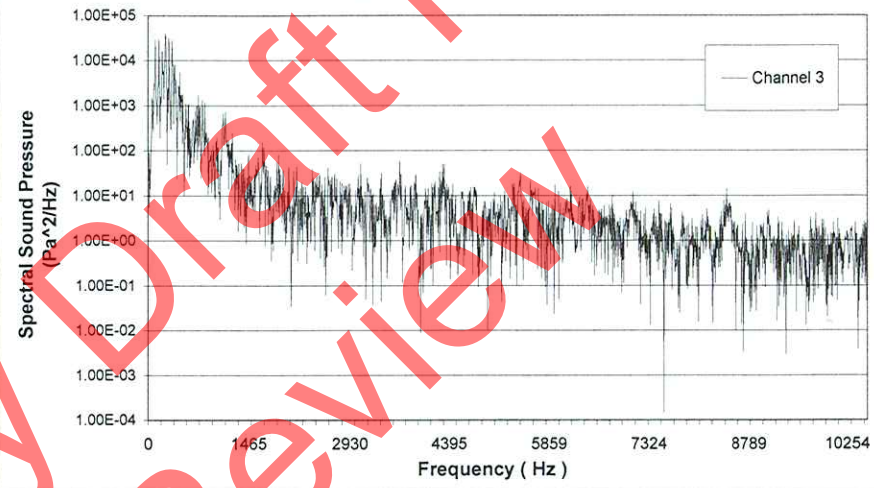

Figure c. Accumulation of Sound Energy

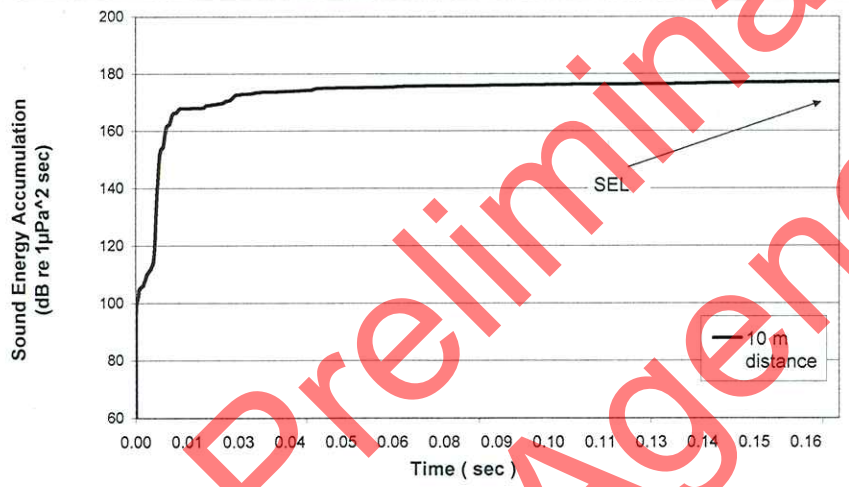

Figure d. Sound Pressure and Sound Energy Levels

Signal Analysis Sound Pressure / Energy Levels

Pile 12-1-2 - 10 m distance	Peak, dB	RMS90%*, dB	SEL, dB
Channel 3	198	185	177

*Impulse averaged over 90% of accumulated energy (5% to 95%)

Preliminary Draft for Agency Review

BNSF. July 25, 2008. 11:21. Pile 12-2-2, Bubble Curtain Turned Off

Figure a. Waveform

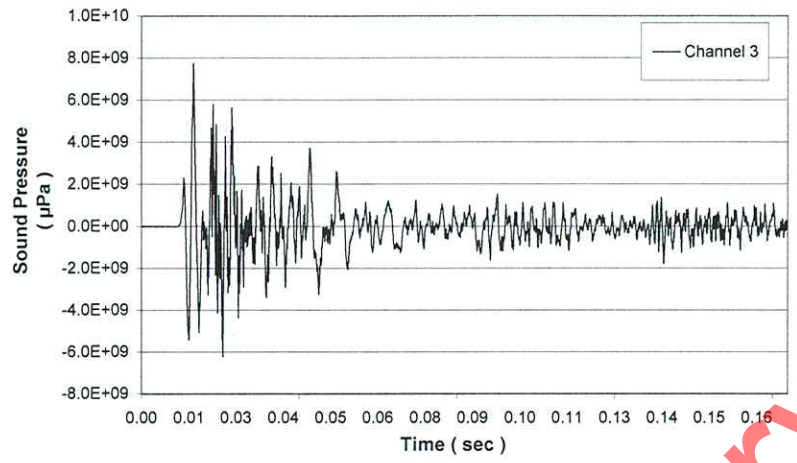

Figure b. Narrow Band Frequency Spectra

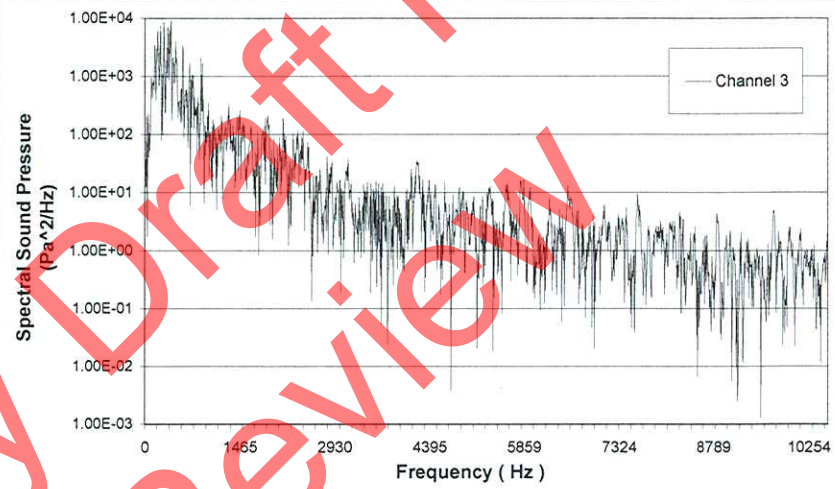

Figure c. Accumulation of Sound Energy

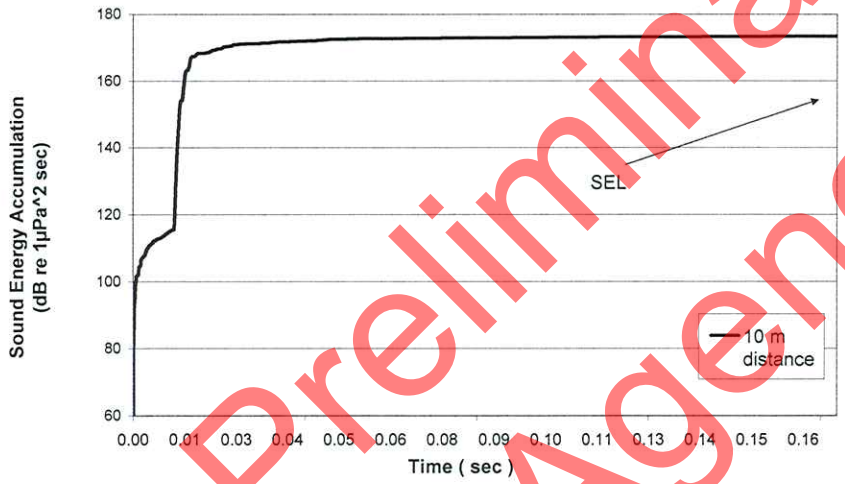

Figure d. Sound Pressure and Sound Energy Levels

Signal Analysis Sound Pressure / Energy Levels

Pile 12-2-2 - 10 m distance	Peak, dB	RMS90%*, dB	SEL, dB
Channel 3	198	183	173

*Impulse averaged over 90% of accumulated energy (5% to 95%)

Preliminary Draft for Agency Review

BNSF. July 25, 2008. 11:21. Pile 12-2-2, Bubble Curtain Turned On

Figure a. Waveform

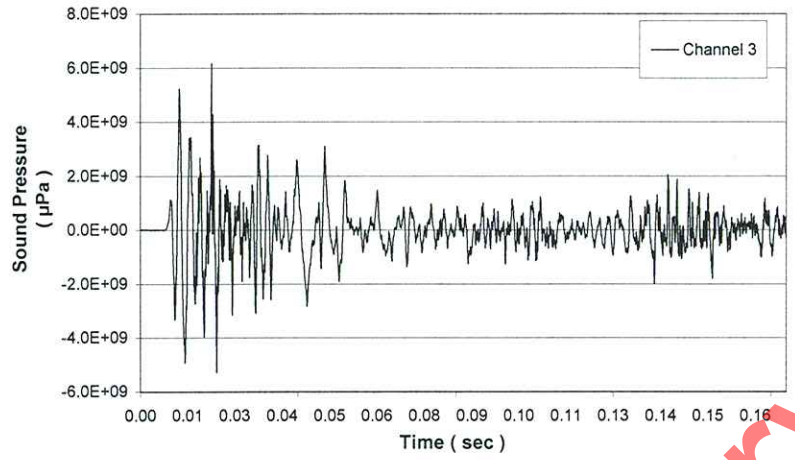

Figure b. Narrow Band Frequency Spectra

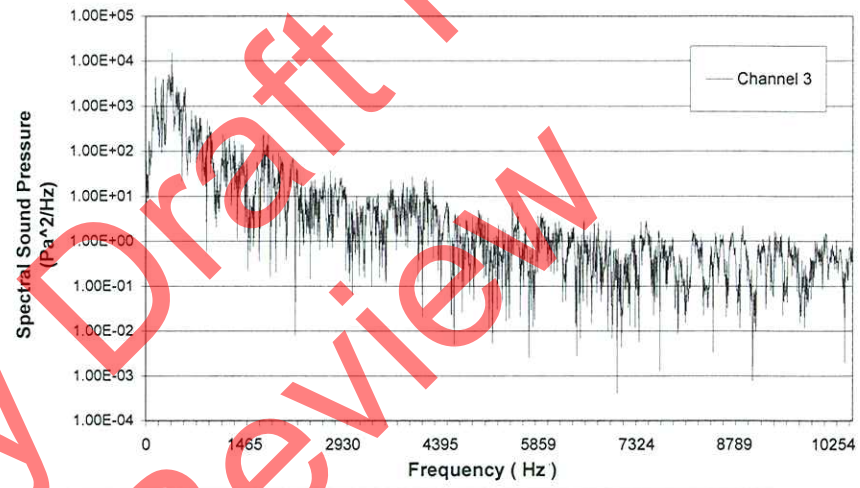

Figure c. Accumulation of Sound Energy

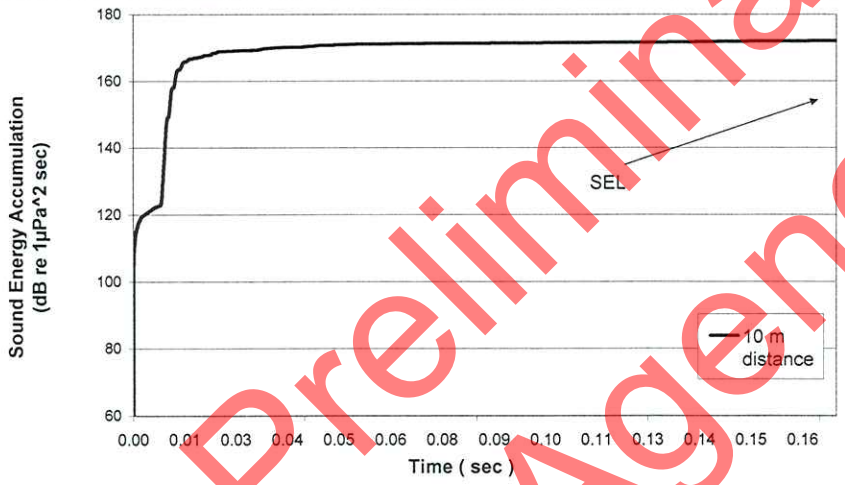

Figure d. Sound Pressure and Sound Energy Levels

Signal Analysis Sound Pressure / Energy Levels

Pile 12-2-2 - 10 m distance	Peak, dB	RMS90%*, dB	SEL, dB
Channel 3	196	180	172

*Impulse averaged over 90% of accumulated energy (5% to 95%)

Preliminary Draft for Agency Review

Appendix F
Impact Pile Driving Durations and Impact Extents

Preliminary Draft for Agency Review

Impact Pile Driving Durations and Impact Extents

Season	Migration Period or Residence Only Period	Impact Pile Driving Impact Areas	Activity
2019			
Spring (May only)	Migration	144 hours (continues to Spring 2020) Injury[1] = 97 m (0.06 mi) disturbance area = 5.3 mi	• Install Temporary bridge 3.1 • Install Temporary bridge 3.9
Summer	Residence Only		• Install Temporary bridge 3.1 • Install Temporary bridge 3.9
Fall	Migration		• Install Temporary bridge 3.1 • Install Temporary bridge 3.9 • Install Permanent bridge 3.1 (starts in November)
		44 hours (continues to Spring 2020) Injury[1] = 0.28 mi disturbance area = 3.36 mi	
2019 to 2020 winter	Residence Only		• Install Temporary bridge 3.1 • Install Temporary bridge 3.9 • Install permanent bridge 3.1
2020			
spring	Migration	" "	• Install Permanent bridge 3.1 - finishing up in March • Install Temporary bridge 3.9 • Install Permanent bridge 3.9
summer	Residence Only	432 hours (continues to Winter 2021) Injury[1] = 0.62 mi disturbance area =2.88 mi	• Install Permanent bridge 3.9
Fall	Migration		• Install Permanent bridge 3.9
2020-2021 Winter	Residence Only		• Install Permanent bridge 3.9 • Removal of temporary bridge 3.1 starting in Feb
2021			
Spring	Migration	" "	• Install Permanent bridge 3.9 • Removal of temporary bridge 3.1 Feb - April
summer	Residence Only		• Install Permanent bridge 3.9 • Removal of temporary bridge 3.9 starting in July
Fall	Migration		• Install Permanent bridge 3.9 • Removal of temporary bridge 3.9
2021-2022 Winter	Residence Only		• Install Permanent bridge 3.9 • Removal of temporary bridge 3.9
2022			
Spring	Migration	None (vibratory only)	• Removal of temporary bridge 3.9
summer	Residence Only	" "	• Removal of temporary bridge 3.9
Fall	Migration	" "	• Removal of temporary bridge 3.9
2022-2023 Winter	Residence Only	" "	• Removal of temporary bridge 3.9
2023			
2022-2023 Winter	Residence Only	" "	• Removal of temporary bridge 3.9

1. Injury spatial extent is in cumulative SEL dB to fish ≥ 2g

Preliminary Draft for Agency Review

Appendix G

Sediment Assessment

Preliminary Draft for Agency Review

USCG0013193/27

Sediment Assessment

Clark Fork River Delta
Lake Pend Oreille
Bonner County, Idaho

for
Ducks Unlimited

May 29, 2014

Preliminary Draft for Agency Review

GeoEngineers
Earth Science + Technology

Preliminary Draft for Agency Review

Sediment Assessment

Clark Fork River Delta
Lake Pend Oreille
Bonner County, Idaho

for
Ducks Unlimited

May 29, 2014

GeoEngineers

523 East Second Avenue
Spokane, Washington 99202
509.363.3125

USCG0013213/27

Sediment Assessment

Clark Fork River Delta
Lake Pend Oreille
Bonner County, Idaho

File No. 15387-014-00

May 29, 2014

Prepared for:

Ducks Unlimited
16605 East White Road
Greenacres, Washington 99016

Attention: Brian Heck, PE

Prepared by:

GeoEngineers, Inc.
523 East Second Avenue
Spokane, Washington 99202
509.363.3125

Scott H. Lathen, PE
Environmental Engineer

Bruce D. Williams
Principal

SHL:BDW:tjh

Preliminary Draft for Agency Review

Disclaimer: Any electronic form, facsimile or hard copy of the original document (email, text, table, and/or figure), if provided, and any attachments are only a copy of the original document. The original document is stored by GeoEngineers, Inc. and will serve as the official document of record.

Copyright© 2014 by GeoEngineers, Inc. All rights reserved.

GeoEngineers

Table of Contents

1.0 INTRODUCTION **1**

2.0 BACKGROUND SUMMARY **1**

3.0 SITE DESCRIPTION **2**

4.0 SCOPE OF SERVICES **2**

5.0 FIELD ACTIVITIES **3**

5.1. Soil Explorations 3
5.2. Sediment Sampling Deviations 4

6.0 CHEMICAL ANALYTICAL RESULTS **4**

6.1. Sediment Samples 4
6.2. Quality Control Samples and Analyses 5

7.0 CONCLUSION **6**

7.1. Assessment Summary 6
7.2. Recommendations 6

8.0 LIMITATIONS **7**

9.0 REFERENCES **8**

LIST OF TABLES

Table 1. Chemical Analytical Results

LIST OF FIGURES

Figure 1. Vicinity Map
Figure 2. Site Plan
Figures 3 through 5. Site Photographs

APPENDICES

Appendix A. Field Procedures
Figure A-1 – Key To Exploration Logs
Figure A-2 through A-35 – Logs of Borings
Appendix B. Chemical Analytical Data and QA/QC Review
Appendix C. Sediment Evaluation Framework, Selected Sections
Appendix D. Report Limitations and Guidelines for Use

Preliminary Draft for Agency Review

1.0 INTRODUCTION

This report presents results of a sediment assessment conducted in April 2014 at the Clark Fork River Delta in Bonner County, Idaho (herein referred as the Site). GeoEngineers has prepared this report for Ducks Unlimited (DU). DU has partnered with the Idaho Department of Fish and Game (IDFG) to restore the delta. Restoration will include excavating sediment from selected borrow areas within the delta to use as fill material elsewhere in the delta. To comply with conditions of the U.S. Army Corps of Engineers 404 permit, the Idaho Department of Environmental Quality (IDEQ) required that DU and IDFG assess the sediments in the borrow areas for metal content. The Site location is shown in Vicinity Map, Figure 1 and Site Plan, Figure 2.

GeoEngineers conducted this assessment in general accordance with our Revised Proposal dated April 3, 2014. This report references the Interim Final Sediment Evaluation Framework for the Pacific Northwest (SEF) (2006) and the Sediment Evaluation Framework for the Pacific Northwest (2009). The 2009 SEF does not contain freshwater contaminant screening levels; per IDEQ instructions, the screening levels from the 2006 edition were applied to this project. The SEF outlines the sediment evaluation requirements and the information reporting requirements. Per the SEF, a sediment evaluation generally begins with a Level 1 assessment that defines the objectives, develops a conceptual site model, collects historical site information and obtains preliminary data. Using the data developed during the Level 1 assessment, a Level 2 assessment, partially consisting of collecting and analyzing sediment samples, is planned and conducted. The Level 1 assessment was not performed at this Site. IDEQ allowed this one-time omission because of the unique circumstances associated with this project. Specifically, the sediment sampling needed to occur prior to the water level in Lake Pend Oreille being raised, preventing access to the sampling locations. This report describes the sediment sampling and analysis conducted as part of the Level 2 assessment. Other deviations from the procedures described in the SEF and in the project Sampling and Analysis Plan (SAP) (GeoEngineers 2014) are described in this report.

2.0 BACKGROUND SUMMARY

The Site is located in the Clark Fork River Delta on Lake Pend Oreille in Bonner County, Idaho, as shown in Figure 1 and Figure 2. The Site area and some of the surrounding area historically operated as a log yard. The log yard no longer operates. Historical data indicate mining activity on the Clark Fork River upstream from the Site could have deposited heavy metals.

Initial restoration dredging activities are planned on the portion of the Site designated as Area 3, located approximately in the middle of the delta (see Figure 2). Area 3 construction will include dredging about 600,000 cubic yards (CY) of sediment from areas designated as “shallow” and “deep” borrow areas for reuse on other areas of the Site. The shallow borrow areas will be excavated to depths between about 5 to 6 feet below ground surface (bgs); deep borrow areas will be excavated to depths between about 7 to 11 feet bgs. Three borrow areas located within Area 3 were planned to be sampled during this assessment. The Area 3 borrow areas are described below:

Preliminary Draft for Agency Review

- Borrow Area 1 (BA-1): A combination of deep and shallow excavations covering about 37.7 acres. The estimated volume of the cut is 510,173 CY.
- Borrow Area 2 (BA-2): A shallow excavation covering about 3.8 acres with an estimated excavation volume of 30,148 CY.
- Borrow Area 3 (BA-3): A deep excavation covering about 5.1 acres with an estimated excavation volume of about 56,984 CY. This area was underwater during our assessment; therefore, samples were not collected from this area.

In addition to Area 3, three borrow areas (BA-1, BA-4 and BA-5) in Area 7, located north of Area 3, were sampled to prepare for future restoration actions in this area.

Based on their knowledge of potential upstream contaminant sources, specifically upstream mining, IDEQ identified the contaminants of concern as heavy metals (cadmium, copper, lead, mercury and zinc) potentially deposited by the Clark Fork River and originating from upstream mining sources.

3.0 SITE DESCRIPTION

The site is located in Bonner County, Idaho, at the mouth of the Clark Fork River entering Lake Pend Oreille. Site conditions generally consist of dried lakebed areas or sandbars deposited by the meandering of the Clark Fork River, tall dense grassy areas, and tree stumps. (See Site Photographs, Figures 3 through 5.) The sampling locations were located in the sandbar and dried lake bed areas. Sampling prior to elevated river levels from spring runoff was necessary in order to obtain the sediment samples. Area 3/BA-3 was underwater at the time of the assessment.

4.0 SCOPE OF SERVICES

The purpose of our activities was to assess the borrow areas in Area 3 and Area 7/BA-1, BA-4 and BA-5 for metals contamination. Samples were collected using hand augers and sediment samplers. IDFG provided boat transportation to and from the Site for our personnel and equipment, and was also responsible for boat safety, including provision of personal floatation devices (PFDs). Our specific scope of services included the following:

- Prepared a site-specific Health and Safety Plan (HASP) to govern the safety of our personnel on site.
- Completed a one-call utility locate request for the assessment area.
- Met IDFG on site to conduct a pre-sampling reconnaissance to prepare and plan for field conditions.
- Prepared a Sampling and Analysis Plan (SAP) describing the proposed sampling program, field procedures and documentation, and quality assurance/quality control (QA/QC) procedures. The SAP was prepared following the guidelines set forth in the referenced SEF.
- Augered 33 explorations in “deep” and “shallow” borrow areas in Area 3/BA-1 and B-2, and Area 7/BA-1, BA-4 and BA-5. Two to four sediment samples were collected from each

Preliminary Draft for Agency Review

exploration location. Samples were collected using applicable environmental soil sampling protocols at variable depth intervals or when changes in the subsurface conditions were observed. Sample locations were logged using a global positioning system (GPS).

- Submitted 103 sediment samples to Anatek Laboratory Inc. (Anatek) located in Spokane, Washington for metals (cadmium, copper, lead, mercury and zinc) analysis using Environmental Protection Agency (EPA) Method 6020A.
- Prepared this report summarizing sediment sampling, chemical analytical results and recommendations.

5.0 FIELD ACTIVITIES

The sediment assessment was conducted in general accordance with the Revised Proposal dated April 3, 2014 and the SAP dated April 14, 2014. Field activities were performed by GeoEngineers' employees on April 15 and 16, 2014. Field methods used during the assessment are described in Appendix A.

5.1. Soil Explorations

Sediment samples from 33 locations (HA-1 through HA-33) were collected using hand augers, hand tools and disposable nitrile gloves. The approximate locations of sample locations are depicted in Figure 2. The sample locations are generally described below:

- HA-1 is located in Area 7, BA-4;
- HA-2 is located in the deep borrow area of BA-1 of Area 7;
- HA-3, HA-6 and HA-7 are located in BA-2 of Area 3. HA-3 was relocated from BA-3 of Area 3 because BA-3 was underwater;
- HA-4 and HA-8 through HA-33 are located in BA-1 of Area 3. HA-4 was relocated from BA-3 of Area 3 because BA-3 was underwater. Eleven sample locations are within the deep borrow areas and the remaining locations are in the shallow borrow areas; and
- HA-5 is located in BA-5 of Area 7.

Explorations located in the "Shallow Borrow Areas" were advanced to depths between 4 to 7 feet bgs and hand augers located in the "Deep Borrow Areas" were advanced to depths between 5 to 9½ feet bgs to assess the proposed restoration project excavation depths. Sediment generally consisted of brown or gray silty sand or sandy silt with varying clay percentages and occasional gravel. Relatively consistent sediment conditions were encountered across the site. Detailed sediment boring logs were prepared in general accordance with ASTM International (ASTM) Standard Practices D 2488, the Standard Practice for Classification of Soils, Visual-Manual Procedure. The sediment assessment field procedures and exploration log details are presented in Appendix A.

GeoEngineers collected two to four sediment samples from each exploration location for chemical analysis. Sediment samples were collected approximately every 1½ to 3 feet and were collected from intervals approximately 1½ to 2½ feet, 4½ to 5½ feet, 6½ to 7½ feet, and 8½ to 9½ feet

Preliminary Draft for Agency Review

bgs using a hand auger, hand tools and disposable nitrile gloves. The soil samples were transferred to two 2-ounce laboratory-prepared glass jars after collection and stored in iced coolers for transport to Anatek. Sediment exploration locations were logged using a GPS device accurate to at least 5 meters.

5.2. Sediment Sampling Deviations

The planned hand-auger exploration depths could not be reached at eight sample locations (HA-3, HA-5/5A, HA-11, HA-12, HA-13, HA-17, HA-19 and HA-33) because of refusal on gravel or severe caving caused by saturated sediment in the explorations. The number of samples specified in the SAP were not collected from these eight locations because the planned exploration depths were not reached (the SAP specified three samples from the shallow borrow explorations and four samples from the deep borrow locations). Other sediment sample deviations included the following:

- Sample location HA-5 initially was advanced in the planned location; however because of the proximity to the river (less than 10 feet south of the exploration location) the exploration was over-saturated and collapsed at about 2 feet bgs. An alternate exploration (HA-5A) was advanced about 20 feet north of the original location. The alternate exploration was advanced to about 4 feet bgs before saturated sediment conditions caused the exploration to collapse. Both locations are depicted on Figure 2.
- Samples were collected from exploration HA-11 on April 15, 2014 at depths of 1½ to 2 feet bgs and 4 to 4½ feet bgs using a hand auger. Saturated sediment caused severe caving. GeoEngineers returned to this exploration on April 16, 2014 to attempt to collect additional sediment samples from greater depths using a drop-hammer sediment sampler. One additional sample was collected from about 4½ to 5 feet bgs. Saturated sediment and associated caving prevented additional sampling from this exploration.
- Explorations HA-15 and HA-30 were both refused at about 3 and 5½ feet bgs, respectively, but the locations of both explorations were moved approximately 5 to 6 feet and re-augered to collect sediment samples from greater depths.

6.0 CHEMICAL ANALYTICAL RESULTS

6.1. Sediment Samples

A total of 103 sediment samples were collected from 33 hand-auger explorations. Sediment samples were submitted to Anatek for metals analysis using EPA Method 6020A. Sediment sample analytical results are compared to the SEF Interim Freshwater SL1 Concentrations (SL1 Concentrations) found in SEF Table 7-1 (included in Appendix C). Chemical analytical results are summarized by the following:

- Thirteen sediment samples contained concentrations of one or more metals exceeding the SL1 Concentrations.
- These 13 samples were collected from 10 exploration locations at depths ranging between 1½ to 6½ feet bgs.

Preliminary Draft for Agency Review

- At least one sample from the three exploration locations in Area 7 (HA-1, HA-2, and HA-5) contained one or more metal exceeding SL1 Concentrations.
- Eight of the exceeding samples were collected from the shallowest sample depth (between 1½ and 2½ feet bgs) of their respective explorations.
- Cadmium exceeded the SL1 Concentration (1.1 milligrams per kilogram [mg/kg]) in eight sediment samples at concentrations ranging between 1.12 and 14.8 mg/kg.
- Copper exceeded the SL1 Concentration (80 mg/kg) in nine sediment samples at concentrations ranging between 94.8 and 425 mg/kg.
- None of the samples contained lead concentrations greater than the SL1 Concentration (340 mg/kg).
- Mercury exceeded the SL1 Concentration (0.280 mg/kg) in six sediment samples at concentrations ranging between 0.301 and 0.627 mg/kg.
- Zinc exceeded the SL1 Concentration (130 mg/kg) in 10 sediment samples at concentrations ranging between 171 and 648 mg/kg.
- We did not note a correlation between the metal concentrations and subsurface sediment characteristics.

Metal concentrations from the sediment samples are tabulated in Chemical Analytical Results, Table 1 and the laboratory report is included in Appendix B.

6.2. Quality Control Samples and Analyses

Two field blanks (Field Blank 1 and 2) and two equipment rinsate blanks (Rinsate Blank 1 and 2) were collected. The purpose of field blanks was to assess if the water used during decontamination contained the contaminants of concern and therefore would bias the sediment sample results high. Field blank samples were collected from the distilled water used during decontamination procedures, poured directly into a lab provided container. Rinsate blanks are collected to evaluate the decontamination procedure used between each sample location to assess whether contaminants encountered in a given exploration are potentially cross contaminating subsequent explorations. The rinsate blank samples were collected by pouring deionized water, provided by Anatek, over the thoroughly decontaminated sampling equipment (hand auger), into a laboratory provided container. The quality control samples were submitted to Anatek for metals (cadmium, copper, lead, mercury and zinc) analysis using EPA Method 6020A. Decontamination procedures are described in Appendix A. Quality control sample results are summarized by the following:

- Cadmium, copper, lead, mercury and zinc were not detected from the field blanks indicating that the distilled water used to decontaminate the sample equipment did not bias the sediment sample results.
- Zinc was detected in both rinsate blanks at 0.0120 and 0.00988 micrograms per liter (µg/L). In our opinion, these zinc concentrations are not a likely source of cross contamination and do not contribute to the zinc detected in the sediment samples. The other metals were not detected in the rinsate samples.

Preliminary Draft for Agency Review

Laboratory QA/QC procedures and analyses are included in the attached laboratory report. No data quality exceptions were noted in Anatek's report.

7.0 CONCLUSION

7.1. Assessment Summary

GeoEngineers conducted sediment assessment activities at the Clark Fork River Delta site for DU on April 15 and 16, 2014. GeoEngineers hand-augered 33 explorations and collected 103 sediment samples from depths ranging between 1½ to 9½ feet bgs to characterize the sediment in planned borrow areas. Based on historic mining activities upstream on the Clark Fork River, the potential contaminants of concern were identified as cadmium, copper, lead, mercury and zinc. Analytical results indicated 13 sediment samples, from 10 exploration locations, contained metals concentrations greater than SL1 Concentrations. Sediment samples from each exploration located in Area 7 contained at least one metal at a concentration greater than the respective SL1 Concentration.

7.2. Recommendations

Based on the detected metal concentrations, DU and IDFG will need to manage the sediment excavated from the borrow areas in Area 3 in a manner to minimize risk particularly to aquatic life. GeoEngineers contacted IDEQ to discuss potential sediment management options. Additionally Chapter 9 of the SEF (2009) identifies general disposal options and requirements for sediment dredging projects. Chapter 9 of the SEF (2009) is included in Appendix C. These options include:

- **Limiting borrow excavations to areas where metals were not detected at concentrations greater than the SL1 Concentrations.** Metals at concentrations greater than the SL1 Concentrations (metals-impacted sediment) were only detected from seven exploration locations (HA-6, HA-14, HA-15, HA-17, HA-28, HA-32 and HA-33) in Area 3, primarily concentrated on the southern and eastern portions of Area 3. If sediments in these areas are not disturbed during dredging operations, then no additional effort is required to cap, dispose, or otherwise handle these sediments. We recommend leaving a buffer during excavation around each metals-impacted sample location extending to the adjacent non-impacted sample locations.

- **Placing metals-impacted sediment in locations to minimize exposure risks and covering them with a cap of non-impacted sediments.** If metals-impacted sediment is needed as fill material to accomplish the goals of the delta restoration, that sediment should be placed on the higher elevations of the planned fill areas. Placing the metals-impacted sediment at higher elevations reduces the risk associated with the sediments becoming washed out during flood events and exposing aquatic life to elevated metals concentrations.

  The restoration plan set provided to us indicates there are five planned fill locations in Area 3 that will be filled to an elevation of about 2066.5 feet. Though these elevated fill areas are relatively small, they might provide enough volume to place metals-impacted sediment. Metals-impacted sediment placed in the elevated fill areas should be covered with approximately 6 inches of non-metals-impacted sediment to reduce the direct contact exposure pathway to potential receptors. Capping limits the bioavailability and migration of

Preliminary Draft for Agency Review

contaminants by providing a physical barrier to exposure pathways. We further recommend re-vegetating the locations where metals-impacted sediment is placed. Vegetation will provide an additional barrier to limit potential exposure and reduce sediment erosion. A botanist or similar expert should evaluate the planned vegetation to confirm its compatibility with the metals-impacted sediment.

This option closely corresponds to the Thin Cap disposal alternative presented in the 2009 SEF ("Section 9.4.1.2"). The SEF recommends using the Thin Cap in low-energy environments where erosion and scour are less likely to expose the metals-impacted sediment.

We recommend a combination of both the options described above. If possible DU and IDFG should avoid excavating the metals-impacted sediments. If fill requirements cannot be satisfied using only the non-impacted sediments, then metals-impacted sediments should be placed in the planned higher elevation fill areas. At each exploration location in Area 3 containing metals-impacted sediments, a non-impacted sediment sample was collected at a greater depth. The sediment excavated from near the contaminated explorations should be considered metals-impacted until excavation reaches the depths where sample results indicate the metals concentrations are less than SL1 Concentrations. Sediment excavated below the non-impacted samples can be used as general fill throughout the site or as cap material covering the metals-impacted sediment. (This report only addresses the suitability of sediment for use as fill based on the metals concentrations evaluated compared to the SL1 Concentrations; no consideration is given to the sediment's structural or other properties required for the restoration project.)

We further recommend the selected contractor performing the work mark the locations of metals-impacted explorations and prepare a work plan that addresses metals-impacted sediment handling and placement. The metals-impacted sediment should be tracked during excavation and placement and final project as-built plans should indicate the placement so that the final disposition is known. DU and IDFG should plan to monitor capped metals-impacted sediment at least annually and after large flood events that might submerge the elevated fill areas. The purpose of the monitoring will be to assess the integrity of the non-impacted sediment and vegetation cap to limit potential exposure pathways. The selected contractor should have the appropriate qualifications to excavate and place contaminated sediment.

Other options to assess and handle the metals-impacted sediment are presented in the SEF (2009) and should be considered if the options described above do not achieve the overall project goals.

We also recommend additional sampling and analysis in Area 7 before construction begins in this area. Each exploration location in Area 7 contained at least one sample with metals concentration exceeding the SL1 Concentrations. An Area 7 assessment should be planned with enough time to conduct the full requirements outlined in the SEF, including the Level 1 assessment.

8.0 LIMITATIONS

We have prepared this assessment report for use by Ducks Unlimited. No other parties may place legal reliance on this work product. This report is not intended for use by others, and the information contained herein is not applicable to other sites.

Preliminary Draft for Agency Review

Within the limitations of scope, schedule and budget, our services have been executed in accordance with generally accepted environmental science practices in this area at the time this work plan was prepared. No warranty or other conditions express, or implied, should be understood.

Any electronic form, facsimile or hard copy of the original document (email, text, table and/or figure), if provided, and any attachments are only a copy of the original document. The original document is stored by GeoEngineers, Inc.

Our interpretations of subsurface conditions are based on field observations and chemical analytical data from widely spaced sampling locations at the site. Site exploration identifies subsurface conditions only at those points where subsurface tests are conducted or samples are taken. GeoEngineers reviewed field and laboratory data and then applied our professional judgment to render an opinion about subsurface conditions throughout the site. Actual subsurface conditions may differ – sometimes significantly – from those indicated in this report. Our report, conclusions and interpretations should not be construed as a warranty of the subsurface conditions.

Please refer to Appendix D titled "Report Limitations and Guidelines for Use" for additional information pertaining to use of this report.

9.0 REFERENCES

U.S. Army Corps of Engineers, U.S. EPA Region 10, et al. (2006) "Interim Final Sediment Evaluation Framework for the Pacific Northwest." 2006.

U.S. Army Corps of Engineers, U.S. EPA Region 10, et al. (2009) "Sediment Evaluation Framework for the Pacific Northwest." 2009.

Preliminary Draft for Agency Review

USCG0013313/27

TABLES

Preliminary Draft for Agency Review

GeoEngineers

Table 1

Chemical Analytical Results[1]

Lower Clark Fork River Delta Sediment Assessment
Bonner County, Idaho

Sample ID (Sample Depth, feet)	Date Collected	Sample Moisture Content (%)	Cadmium[2]	Copper[2]	Lead[2]	Mercury[2]	Zinc[2]
Soil Samples (mg/kg)							
HA-1 (1.5 - 2)	04/16/14	30.8	0.213	70.7	34.9	0.177	66.3
HA-1 (4.5 - 5)	04/16/14	31.1	0.636	**127**	79.1	**0.316**	128
HA-1 (6.5 - 7)	04/16/14	36.2	ND	23.1	12.2	ND	54.3
HA-2 (1.5 - 2)	04/16/14	30.3	**2.60**	**415**	83.8	**0.374**	**620**
HA-2 (4.5 - 5)	04/16/14	28.4	ND	19.7	8.97	ND	36.1
HA-2 (6.5 - 7)	04/16/14	22.1	ND	11.2	6.22	ND	28.3
HA-2 (9 - 9.5)	04/16/14	22.7	ND	11.5	6.14	ND	29.3
HA-3 (1.5 - 2)	04/16/14	24	ND	10.5	6.15	ND	27.2
HA-3 (4 - 4.5)	04/16/14	27.4	ND	5.27	3.47	ND	18.7
HA-4 (1.5 - 2)	04/16/14	25.4	ND	22.5	12.5	ND	53.5
HA-4 (4 - 4.5)	04/16/14	23.3	ND	12.0	6.43	ND	29.6
HA-4 (6 - 6.5)	04/16/14	29.3	ND	18.1	8.20	ND	33.3
HA -5 (1.5 - 2)	04/16/14	35.8	**2.23**	**100**	78.5	0.119	**648**
HA-5A (3.5 - 4)[3]	04/16/14	27.7	**1.64**	78.9	84.7	0.116	**417**
HA-6 (2 - 2.5)	04/15/14	34.6	ND	73.9	28.6	0.111	130
HA-6 (4 - 4.5)	04/15/14	34.6	0.751	76.8	26.6	0.122	**228**
HA-6 (6 - 6.5)	04/15/14	29.3	0.752	**94.8**	30.9	0.116	**299**
HA-7 (1.5 - 2)	04/16/14	17.7	ND	11.4	6.82	ND	29.0
HA-7 (4 - 4.5)	04/16/14	23.3	ND	4.74	4.01	ND	16.4
HA-7 (6 - 6.5)	04/16/14	22.3	ND	5.01	3.33	ND	18.9
HA-8 (1.5 - 2)	04/16/14	30.1	ND	20.8	9.93	ND	47.4
HA-8 (4 - 4.5)	04/16/14	26.8	ND	18.6	10.6	ND	39.0
HA-8 (6 - 6.5)	04/16/14	30.5	ND	12.8	6.97	ND	28.9
HA-9 (1.5 - 2)	04/16/14	26.3	ND	23.9	14.7	ND	50.5
HA-9 (4 - 4.5)	04/16/14	26.1	ND	7.35	4.36	ND	22.3
HA-9 (6 - 6.5)	04/16/14	24.4	ND	5.69	4.77	ND	20.6
HA-10 (1.5 - 2)	04/16/14	30.2	ND	18.9	11.0	ND	49.2
HA-10 (4 - 4.5)	04/16/14	27.1	ND	16.9	9.32	ND	35.6
HA-10 (6 - 6.5)	04/16/14	21.9	ND	4.56	3.30	ND	15.9
HA-10 (7.5 - 8)	04/16/14	23	ND	5.37	3.39	ND	19.2
HA-11 (1.5 - 2)	04/16/14	31.5	ND	22.9	11.9	ND	57.3
HA-11 (4 - 4.5)	04/16/14	28.9	ND	24.0	14.0	ND	63.0
HA-11 (4.5 - 5)	04/16/14	30.8	ND	14.9	7.87	ND	37.5
HA-12 (1.5 - 2)	04/16/14	27.7	ND	22.8	13.6	ND	49.6
HA-12 (4 - 4.5)	04/16/14	27.6	ND	23.5	12.6	ND	47.4
HA-12 (5.5 - 6)	04/16/14	29.1	ND	16.8	9.74	ND	43.8
HA-13 (1.5 - 2)	04/15/14	25.8	ND	26.3	13.6	ND	52.3
HA-13 (4.5 - 5)	04/15/14	25.8	ND	20.7	11.6	ND	40.3
HA-14 (1.5 - 2)	04/15/14	39.1	**1.46**	**176**	43.2	0.193	**368**
HA-14 (4 - 4.5)	04/15/14	28.8	ND	27.7	13.9	ND	60.7
HA-14 (6 - 6.5)	04/16/14	30.3	ND	22.4	12.1	ND	51.9
HA-15 (1.5 - 2)	04/15/14	30.2	1.01	**192**	54.3	**0.425**	**171**

Preliminary Draft for Agency Review

Sample ID (Sample Depth, feet)	Date Collected	Sample Moisture Content (%)	Cadmium[2]	Copper[2]	Lead[2]	Mercury[2]	Zinc[2]
HA-15 (4 - 4.5)	04/15/14	34.5	ND	25.4	12.6	ND	57.4
HA-15 (6 - 6.5)	04/15/14	22.7	ND	9.01	4.87	ND	22.6
HA-16 (2 - 2.5)	04/15/14	24.1	ND	15.0	12.0	ND	42.7
HA-16 (4 - 4.5)	04/15/14	31	ND	42.0	9.39	ND	39.6
HA-16 (6.5 - 7)	04/15/14	25.3	ND	20.9	11.4	ND	37.6
HA-17 (1.5 - 2)	04/15/14	29	ND	24.5	20.2	0.301	57.9
HA-17 (4 - 4.5)	04/15/14	25.6	ND	21.0	12.5	ND	44.6
HA-17 (6 - 6.5)	04/15/14	28.3	ND	16.8	12.2	ND	41.1
HA-18 (1.5 - 2)	04/15/14	31.9	ND	19.7	12.3	ND	48.2
HA-18 (4 - 4.5)	04/15/14	27.2	ND	25.6	14.8	ND	46.8
HA-18 (6 - 6.5)	04/15/14	23.5	ND	17.0	9.27	ND	35.2
HA-19 (1.5 - 2)	04/15/14	33	ND	25.7	14.1	0.0856	62.4
HA-19 (4 - 4.5)	04/15/14	26.4	ND	16.8	10.1	ND	34.0
HA-19 (6 - 6.5)	04/15/14	15.2	ND	8.66	5.20	ND	22.7
HA-20 (1.5 - 2)	04/15/14	19.1	ND	16.0	8.91	ND	33.1
HA-20 (4.5 - 5)	04/15/14	22.4	ND	12.4	7.51	ND	32.5
HA-20 (6.5 - 7)	04/15/14	25.1	ND	18.5	12.5	ND	42.6
HA-21 (1.5 - 2)	04/15/14	23.7	ND	21.4	13.2	ND	72.5
HA-21 (4.5 - 5)	04/15/14	23	ND	18.1	11.1	ND	42.5
HA-21 (6.5 - 7)	04/15/14	24.7	ND	19.9	11.3	ND	41.6
HA-21 (9 - 9.5)	04/15/14	23.5	ND	15.1	9.08	ND	34.9
HA-22 (2 - 2.5)	04/15/14	31.1	ND	26.3	15.4	ND	73.5
HA-22 (4.5 - 5)	04/15/14	25.7	ND	19.9	12.0	ND	37.8
HA-22 (6.5 - 7)	04/15/14	29.9	ND	20.5	10.5	ND	50.5
HA-23 (1.5 - 2)	04/15/14	25	0.662	21.1	13.9	ND	67.6
HA-23 (4.5 - 5)	04/15/14	23.3	ND	17.7	10.5	ND	36.7
HA-23 (6.5 - 7)	04/15/14	27.6	ND	21.6	12.3	ND	40.5
HA-24 (1.5 - 2)	04/15/14	26.7	ND	21.2	12.7	ND	38.3
HA-24 (4.5 - 5)	04/15/14	24.4	ND	17.2	9.43	ND	34.2
HA-24 (7 - 7.5)	04/15/14	24.3	ND	13.8	8.57	ND	32.5
HA-25 (2.5 - 3)	04/15/14	27.2	ND	17.2	9.26	ND	33.3
HA-25 (4.5 - 5)	04/15/14	24.1	ND	29.5	11.8	ND	37.7
HA-25 (6.5 - 7)	04/15/14	28	ND	10.6	6.98	ND	26.6
HA-25 (8.5 - 9)	04/15/14	18.3	ND	5.21	3.77	ND	17.4
HA-26 (1.5 - 2)	04/16/14	30.6	ND	13.3	8.59	ND	29.5
HA-26 (5 - 5.5)	04/16/14	30.4	ND	10.6	6.84	ND	26.6
HA-26 (6.5 - 7)	04/16/14	24.4	ND	5.40	4.01	ND	19.0
HA-26 (9 - 9.5)	04/16/14	23.9	ND	ND	ND	ND	ND
HA-27 (1.5 - 2)	04/15/14	31.4	ND	26.4	13.7	ND	59.1
HA-27 (4.5 -5)	04/15/14	21.3	ND	14.4	10.3	ND	36.8
HA-27 (6.5 - 7)	04/15/14	23.6	ND	14.9	8.46	ND	32.8
HA-28 (1.5 - 2)	04/16/14	27	14.8	14.8	8.96	ND	ND
HA-28 (4.5 - 5)	04/16/14	26.4	ND	15.5	9.41	ND	32.2
HA-28 (6.5 - 7)	04/16/14	26.8	ND	15.6	8.95	ND	29.7
HA-29 (1.5 - 2)	04/16/14	22.4	ND	15.2	9.21	ND	30.9
HA-29 (4.5 - 5)	04/16/14	27.2	ND	13.8	8.54	ND	27.0
HA-29 (6.5 - 7)	04/16/14	26.4	ND	13.9	9.07	ND	30.7
HA-29 (9 - 9.5)	04/16/14	27.4	ND	8.25	5.52	ND	23.0

Preliminary Draft for Agency Review

Sample ID (Sample Depth, feet)	Date Collected	Sample Moisture Content (%)	Cadmium[2]	Copper[2]	Lead[2]	Mercury[2]	Zinc[2]
HA-30 (1.5 - 2)	04/16/14	23.7	ND	18.4	12.0	ND	49.1
HA-30 (4 - 4.5)	04/16/14	28.1	ND	17.1	9.75	ND	40.1
HA-30 (6.5 - 7)	04/16/14	29.7	ND	16.6	9.32	ND	35.9
HA-31 (1.5 - 2)	04/16/14	21.6	ND	14.7	8.69	ND	31.1
HA-31 (2 - 2.5)	04/16/14	28	ND	17.7	10.5	ND	37.5
HA-31 (4.5 - 5)	04/16/14	28.8	ND	19.1	9.90	ND	38.8
HA-32 (1.5 - 2)	04/16/14	35.9	**1.12**	**98.1**	27.4	0.197	**194**
HA-32 (4.5 - 5)	04/16/14	31.1	**2.11**	**425**	97.4	**0.627**	**442**
HA-32 (6.5 - 7)	04/16/14	24.8	ND	15.2	8.88	ND	33.1
HA-32 (9 - 9.5)	04/16/14	25.6	ND	17.7	10.7	ND	40.7
HA-33 (2 - 2.5)	04/16/14	28.8	**1.97**	**238**	56.2	**0.303**	**497**
HA-33 (4 - 4.5)	04/16/14	22.9	ND	21.8	12.9	ND	54.1
HA-33 (6.5 - 7)	04/16/14	27.4	ND	12.0	7.67	ND	26.6
SEF - Interim Freshwater - SL1 Concentrations[4] (mg/kg)			**1.1**	**80**	**340**	**0.28**	**130**
QA/QC Samples (µg/L)							
Rinsate Blank 1	04/15/14		ND	ND	ND	ND	0.0120
Rinsate Blank 2	04/16/14		ND	ND	ND	ND	0.00988
Field Blank 1	04/15/14		ND	ND	ND	ND	ND
Field Blank 2	04/16/14		ND	ND	ND	ND	ND

Notes:

[1]Samples submitted to Anatek Labs, Inc. of Spokane, Washington

[2]Samples analyzed for metals using Environmental Protection Agency (EPA) Method 6020A.

[3]The planned location of HA-5 was too close to the river. Rapid groundwater seepage caused heavy caving and the boring was abandoned at about 2 feet bgs, An alternate location (HA-5A) was advanced about 20 feet north of HA-5.

[4]Northwest Regional Interim Sediment Evaluation Framework (SEF)

ND = Analyte not detected at concentrations greater than the laboratory method detection limit.

bgs = below ground surface; mg/kg = milligrams per kilogram

Bolding and shading indicates the analyte was detected at concentrations greater than SEF - Interim Freshwater - SL1 Concentrations.

Preliminary Draft for Agency Review

USCG0013353/27

FIGURES

Preliminary Draft for Agency Review

GeoEngineers

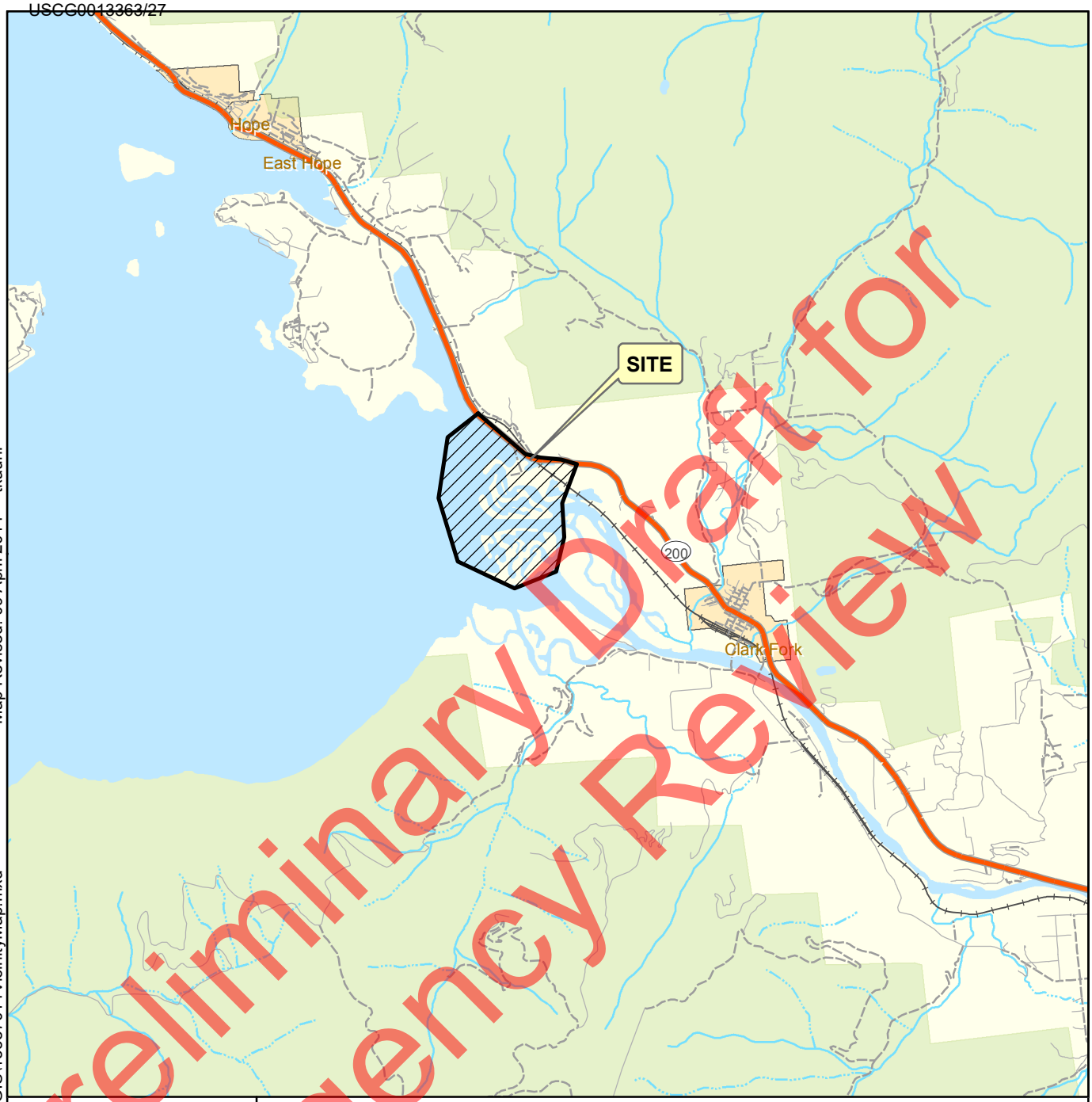

Preliminary Draft for Agency Review

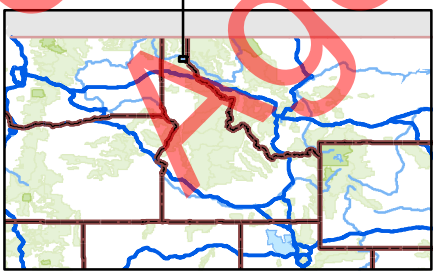

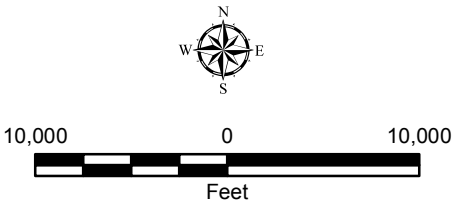

Notes:
1. The locations of all features shown are approximate.
2. This drawing is for information purposes. It is intended to assist in showing features discussed in an attached document. GeoEngineers, Inc. can not guarantee the accuracy and content of electronic files. The master file is stored by GeoEngineers, Inc. and will serve as the official record of this communication.
3. It is unlawful to copy or reproduce all or any part thereof, whether for personal use or resale, without permission.

Data Sources: ESRI Data & Maps

Projection:

Vicinity Map

Lower Clark Fork River Delta Sediment Assessment
Bonner County, Idaho

GEOENGINEERS

Figure 1

Office: SPO Path: W:\Spokane\Projects\15\15387014\GIS\15387014VicinityMap.mxd Map Revised: 09 April 2014 tkauhi

Office: SPO Path: W:\Spokane\Projects\15\15387014\GIS\15387014SitePlanMap.mxd Map Revised: 27 May 2014 ccabrera

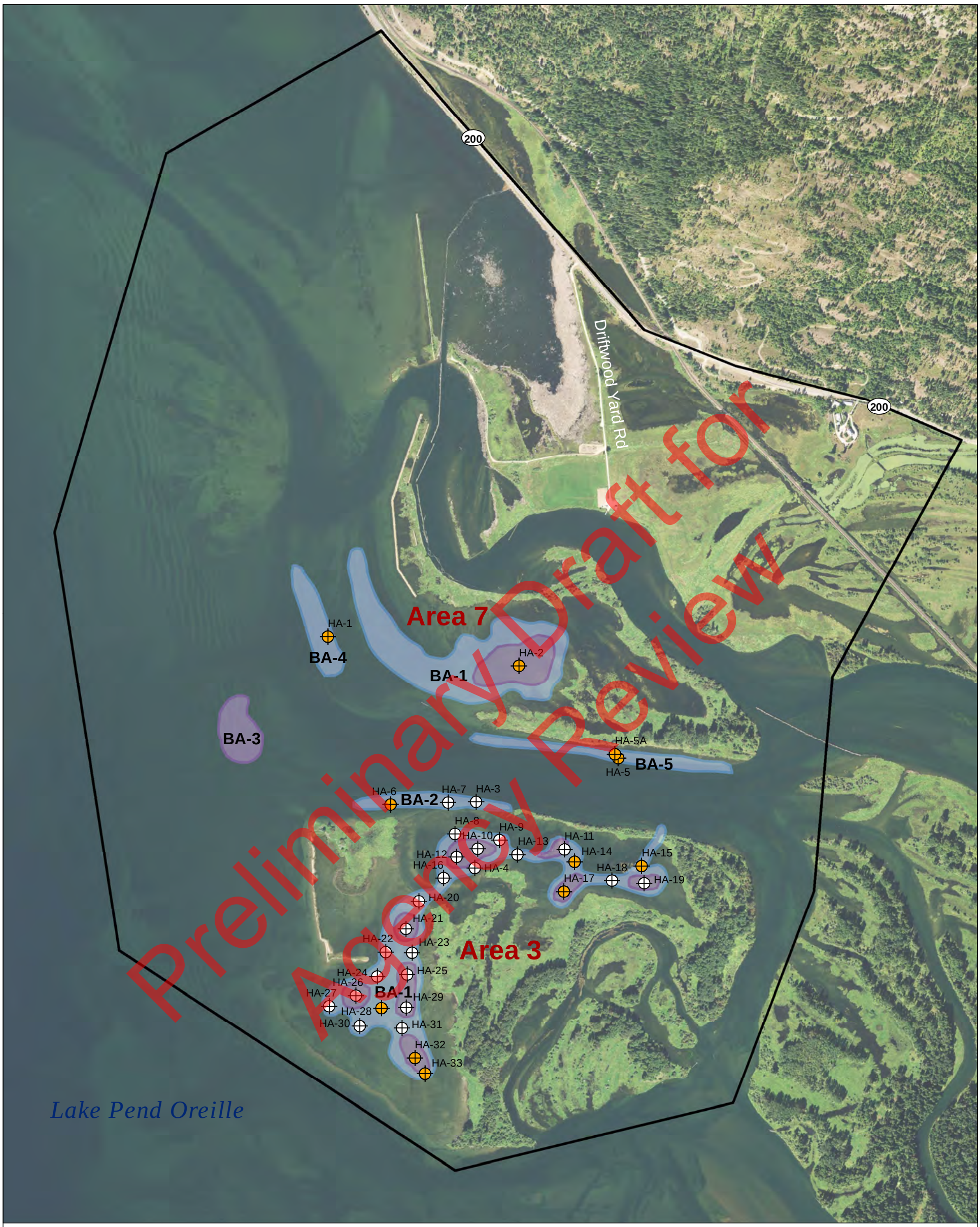

Legend

HA-3 — Hand Auger Exploration Locations

HA-1 — Exploration location with at least one sample containing one or more metal (cadmium, copper, lead, mercury or zinc) at a concentration greater than Interim SEF Freshwater SL1 levels.

Deep Borrow Area EL = 2045.0

Shallow Borrow Area EL = 2049.0

N W E S

1,000 0 1,000
Feet

Data Source: Imagery from ESRI Data Online.

Projection: NAD 1983 StatePlane Idaho East FIPS 1101 Feet
Notes:
1. The locations of all features shown are approximate.
2. This drawing is for information purposes. It is intended to assist in showing features discussed in an attached document. GeoEngineers, Inc. cannot guarantee the accuracy and content of electronic files. The master file is stored by GeoEngineers, Inc. and will serve as the official record of this communication.
3. SEF = Sediment Evaluation Framework; BA = Borrow Area

Site Plan

Lower Clark Fork River Delta Sediment Assessment
Bonner County, Idaho

GeoEngineers

Figure 2

Typical sandbar conditions encountered at site.

Typical sandbar conditions.

Preliminary Draft for Agency Review

Site Photographs	
Lower Clark Fork River Delta Sediment Assessment	
GeoEngineers	Figure 3

Basic hand-auger sample procedures

Typical site conditions

Preliminary Draft for Agency Review

Site Photographs	
Lower Clark Fork River Delta Sediment Assessment	
GeoEngineers	Figure 4

Decontamination procedure.

Sediment conditions typical of site. (Wet silty sand)

Preliminary Draft for Agency Review

Site Photographs	
Lower Clark Fork River Delta Sediment Assessment	
GeoEngineers	Figure 5

USCG0013413/27

Preliminary Draft for Agency Review

GeoEngineers

APPENDIX A
Field Procedures

Preliminary Draft for Agency Review

APPENDIX A
FIELD PROCEDURES

GENERAL

This section of the report describes the field procedures, field Quality Assurance/Quality Control (QA/QC) protocol, and the chemical testing program that was implemented during the sediment assessment activities. The field activities included the following activities:

- Collection of sediment samples from hand auger explorations;
- Decontamination procedures;
- Location control;
- Handling of investigation derived waste (IDW); and
- Laboratory Analytical Plan.

Collecting Soil Samples from Hand-Auger Explorations

Soil Sampling

Sediment samples were collected using hand augers and/or other hand tools at approximately 1½ to 2-foot sample intervals. Sampling equipment was decontaminated between each sampling location.

Sediment samples were placed in an ice chest containing frozen blue ice or crushed ice for storage prior to delivery to the laboratory. Standard chain-of-custody procedures were observed during transport of the samples to the laboratory.

Decontamination Procedures

The objective of the decontamination procedures described herein was to minimize the potential for cross-contamination between sample locations.

Sampling equipment was decontaminated in accordance with the following procedures between each sample location and sampling attempt.

1. Brush equipment with a nylon brush to remove large particulate matter.
2. Rinse with distilled water.
3. Wash with non-phosphate detergent solution (Liquinox® and potable tap water).
4. Final rinse with distilled water.

Location Control

Horizontal sample control was maintained throughout the project. Horizontal control to locate sample locations in the field was established using an iPad with GPS software accurate to approximately 5 lateral meters

Preliminary Draft for Agency Review

Vertical sample control was maintained during hand-auger operation. The depth of the augered boring was measured to the nearest inch using a metal tape measure before augering to acquire a sediment sample. The hand auger boring was measured with a metal measuring tape after the sample is retrieved from the auger boring.

Preliminary Draft for Agency Review

SOIL CLASSIFICATION CHART

MAJOR DIVISIONS			SYMBOLS GRAPH	SYMBOLS LETTER	TYPICAL DESCRIPTIONS
COARSE GRAINED SOILS MORE THAN 50% RETAINED ON NO. 200 SIEVE	GRAVEL AND GRAVELLY SOILS MORE THAN 50% OF COARSE FRACTION RETAINED ON NO. 4 SIEVE	CLEAN GRAVELS (LITTLE OR NO FINES)		GW	WELL-GRADED GRAVELS, GRAVEL - SAND MIXTURES
				GP	POORLY-GRADED GRAVELS, GRAVEL - SAND MIXTURES
		GRAVELS WITH FINES (APPRECIABLE AMOUNT OF FINES)		GM	SILTY GRAVELS, GRAVEL - SAND - SILT MIXTURES
				GC	CLAYEY GRAVELS, GRAVEL - SAND - CLAY MIXTURES
	SAND AND SANDY SOILS MORE THAN 50% OF COARSE FRACTION PASSING NO. 4 SIEVE	CLEAN SANDS (LITTLE OR NO FINES)		SW	WELL-GRADED SANDS, GRAVELLY SANDS
				SP	POORLY-GRADED SANDS, GRAVELLY SAND
		SANDS WITH FINES (APPRECIABLE AMOUNT OF FINES)		SM	SILTY SANDS, SAND - SILT MIXTURES
				SC	CLAYEY SANDS, SAND - CLAY MIXTURES
FINE GRAINED SOILS MORE THAN 50% PASSING NO. 200 SIEVE	SILTS AND CLAYS	LIQUID LIMIT LESS THAN 50		ML	INORGANIC SILTS, ROCK FLOUR, CLAYEY SILTS WITH SLIGHT PLASTICITY
				CL	INORGANIC CLAYS OF LOW TO MEDIUM PLASTICITY, GRAVELLY CLAYS, SANDY CLAYS, SILTY CLAYS, LEAN CLAYS
				OL	ORGANIC SILTS AND ORGANIC SILTY CLAYS OF LOW PLASTICITY
	SILTS AND CLAYS	LIQUID LIMIT GREATER THAN 50		MH	INORGANIC SILTS, MICACEOUS OR DIATOMACEOUS SILTY SOILS
				CH	INORGANIC CLAYS OF HIGH PLASTICITY
				OH	ORGANIC CLAYS AND SILTS OF MEDIUM TO HIGH PLASTICITY
HIGHLY ORGANIC SOILS				PT	PEAT, HUMUS, SWAMP SOILS WITH HIGH ORGANIC CONTENTS

NOTE: Multiple symbols are used to indicate borderline or dual soil classifications

ADDITIONAL MATERIAL SYMBOLS

SYMBOLS GRAPH	SYMBOLS LETTER	TYPICAL DESCRIPTIONS
	AC	Asphalt Concrete
	CC	Cement Concrete
	CR	Crushed Rock/ Quarry Spalls
	TS	Topsoil/ Forest Duff/Sod

Groundwater Contact

Measured groundwater level in exploration, well, or piezometer

Measured free product in well or piezometer

Graphic Log Contact

Distinct contact between soil strata or geologic units

Approximate location of soil strata change within a geologic soil unit

Material Description Contact

Distinct contact between soil strata or geologic units

Approximate location of soil strata change within a geologic soil unit

Sampler Symbol Descriptions

- 2.4-inch I.D. split barrel
- Standard Penetration Test (SPT)
- Shelby tube
- Piston
- Direct-Push
- Bulk or grab

Blowcount is recorded for driven samplers as the number of blows required to advance sampler 12 inches (or distance noted). See exploration log for hammer weight and drop.

A "P" indicates sampler pushed using the weight of the drill rig.

Laboratory / Field Tests

%F	Percent fines
AL	Atterberg limits
CA	Chemical analysis
CP	Laboratory compaction test
CS	Consolidation test
DS	Direct shear
HA	Hydrometer analysis
MC	Moisture content
MD	Moisture content and dry density
OC	Organic content
PM	Permeability or hydraulic conductivity
PI	Plasticity index
PP	Pocket penetrometer
PPM	Parts per million
SA	Sieve analysis
TX	Triaxial compression
UC	Unconfined compression
VS	Vane shear

Sheen Classification

NS	No Visible Sheen
SS	Slight Sheen
MS	Moderate Sheen
HS	Heavy Sheen
NT	Not Tested

NOTE: The reader must refer to the discussion in the report text and the logs of explorations for a proper understanding of subsurface conditions. Descriptions on the logs apply only at the specific exploration locations and at the time the explorations were made; they are not warranted to be representative of subsurface conditions at other locations or times.

Preliminary Draft for Agency Review

KEY TO EXPLORATION LOGS

GEOENGINEERS

FIGURE A-1

USCG0013463/27

Date Excavated: 4/16/2014 | Logged By: EBD

Equipment: Hand Auger | Total Depth (ft) 7.0

Elevation (feet)	Depth (feet)	SAMPLE: Testing Sample	SAMPLE: Sample Name / Testing	Graphic Log	Group Classification	Encountered Water	MATERIAL DESCRIPTION	Moisture Content, %	REMARKS
					SM		Gray silty sand (very loose, moist)		
						▽	Becomes wet		
	1								
		X	HA-1(1.5-2.0) CA					30.8	
	2						Becomes loose to medium dense		
	3								
	4								
		X	HA-1(4.5-6.0) CA					31.1	
	5								
	6						Becomes medium dense		
		X	HA-1(6.5-8.0) CA					36.2	
	7						Hand auger completed at approximately 7 feet Groundwater seepage observed at 0.5 feet No caving observed		

Note: See Figure A-1 for explanation of symbols

Preliminary Draft for Agency Review

Spokane: Date:5/14/14 Path:P:\15\15387014\00\GINT\15387014\00.GPJ DBTemplate:LibTemplate:GEOENGINEERS8.GDT/GEI8_TESTPIT_1P_GEOTEC

Log of Hand Auger HA-1

GEOENGINEERS

Project: Lower Clark Fork River Delta Sediment Assessment

Project Location: Bonner County, Idaho

Project Number: 15387-014-00

Figure A-2

Sheet 1 of 1

USCG0013473/27

Date Excavated: 4/16/2014 Logged By: EBD

Equipment: Hand Auger Total Depth (ft) 9.5

Elevation (feet)	Depth (feet)	SAMPLE: Testing Sample	SAMPLE: Sample Name / Testing	Graphic Log	Group Classification	Encountered Water	MATERIAL DESCRIPTION	Moisture Content, %	REMARKS
					SP		Brown fine to medium sand with trace silt (loose, moist)		
	1				SM		Grayish-brown silty fine to medium sand with orange mottling (loose, moist)		
		X	HA-2(1.5-2.0) CA					30.3	
	2				ML		Gray clayey silt with sand (soft, wet)		
	3								
	4					▽			
		X	HA-2(4.5-6.0) CA		SM		Gray silty fine to medium sand with clay (loose, wet)	28.4	
	5								
	6				SP		Gray fine to medium sand with occasional silt (very loose, wet)		
		X	HA-2(6.5-8.0) CA					22.1	
	7								
	8						With occasional orange mottling (very loose, moist)		
	9	X	HA-2(9.0-9.5) CA					22.7	

Hand auger completed at approximately 9.5 feet
Groundwater seepage observed at 4 feet
No caving observed

Note: See Figure A-1 for explanation of symbols

Preliminary Draft for Agency Review

Spokane: Date:5/14/14 Path:P:\15\15387014\00\GINT\15387014\00.GPJ DBTemplate:LibTemplate:GEOENGINEERS8.GDT/GEI8_TESTPIT_1P_GEOTEC

Log of Hand Auger HA-2

GEOENGINEERS

Project: Lower Clark Fork River Delta Sediment Assessment
Project Location: Bonner County, Idaho
Project Number: 15387-014-00

Figure A-3
Sheet 1 of 1

USCG0013483/27

Date Excavated: 4/16/2014 Logged By: EBD

Equipment: Hand Auger Total Depth (ft) 5.0

Elevation (feet)	Depth (feet)	SAMPLE Testing Sample	SAMPLE Sample Name Testing	Graphic Log	Group Classification	Encountered Water	MATERIAL DESCRIPTION	Moisture Content, %	REMARKS
					SP		Brown fine to medium sand with trace silt (loose, moist)		
	1								
		X	HA-3(1.5-2.0) CA					24	
	2					▽			
	3						Grades to gray		
	4								
		X	HA-3(4.5-6.0) CA					27.4	
	5								

Hand auger completed at approximately 5 feet
Slight to moderate groundwater seepage observed at 2 feet
Slight caving observed at 2 feet
Severe caving observed and refusal at 4.5 feet

Note: See Figure A-1 for explanation of symbols

Preliminary Draft for Agency Review

Spokane: Date:5/14/14 Path:P:\15\15387014\00\GINT\15387014\00.GPJ DBTemplate:LibTemplate:GEOENGINEERS8.GDT/GEI8_TESTPIT_1P_GEOTEC

Log of Hand Auger HA-3

GEOENGINEERS

Project: Lower Clark Fork River Delta Sediment Assessment
Project Location: Bonner County, Idaho
Project Number: 15387-014-00

Figure A-4
Sheet 1 of 1

USCG0013493/27

Date Excavated: 4/16/2014 Logged By: EBD

Equipment: Hand Auger Total Depth (ft) 6.5

Elevation (feet)	Depth (feet)	SAMPLE: Testing Sample	SAMPLE: Sample Name Testing	Graphic Log	Group Classification	Encountered Water	MATERIAL DESCRIPTION	Moisture Content, %	REMARKS
					ML		Brownish-gray sandy silt with organic matter (soft, moist0		
							Grades to gray with brown mottling		
	1								
		X	HA-4(1.5-2.0) CA					25.4	
	2								
	3				SM		Gray silty fine sand (loose, moist)		
	4	X	HA-4(4.0-4.5) CA					23.3	
	5								
	6	X	HA-4(6.0-6.5) CA					29.3	

Hand auger completed at approximately 6.5 feet
Moderate to rapid groundwater seepage observed at 3.5 feet
Severe caving observed and refusal at 6.5 feet

Note: See Figure A-1 for explanation of symbols

Preliminary Draft for Agency Review

Spokane: Date:5/14/14 Path:P:\15\15387014\00\GINT\15387014\00.GPJ DBTemplate:LibTemplate:GEOENGINEERS8.GDT/GEI8_TESTPIT_1P_GEOTEC

Log of Hand Auger HA-4

GEOENGINEERS

Project: Lower Clark Fork River Delta Sediment Assessment
Project Location: Bonner County, Idaho
Project Number: 15387-014-00

Figure A-5
Sheet 1 of 1

USCG0013503/27

Date Excavated: 4/16/2014 Logged By: EBD

Equipment: Hand Auger Total Depth (ft) 2.0

Elevation (feet)	Depth (feet)	SAMPLE Testing Sample	SAMPLE Sample Name Testing	Graphic Log	Group Classification	Encountered Water	MATERIAL DESCRIPTION	Moisture Content, %	REMARKS
					SP-SM		Brown and gray mottled fine to medium sand with silt (loose, moist)		
	1								
		X	HA-5(1.5-2.0) CA					35.8	
	2					▽			
							Refusal at 2 feet, move 20 feet north for HA-5A Hand auger completed at approximately 2 feet Moderate to rapid groundwater seepage observed at 2 Severe caving observed and refusal at 2 feet		

Note: See Figure A-1 for explanation of symbols

Preliminary Draft for Agency Review

Spokane: Date:5/14/14 Path:P:\15\15387014\00\GINT\15387014\00.GPJ DBTemplate:LibTemplate:GEOENGINEERS8.GDT/GEI8_TESTPIT_1P_GEOTEC

Log of Hand Auger HA-5

GEOENGINEERS

Project: Lower Clark Fork River Delta Sediment Assessment

Project Location: Bonner County, Idaho

Project Number: 15387-014-00

Figure A-6

Sheet 1 of 1

USCG0013513/27

Date Excavated: 4/16/2014 Logged By: EBD

Equipment: Hand Auger Total Depth (ft) 4.5

Elevation (feet)	Depth (feet)	SAMPLE: Testing Sample	SAMPLE: Sample Name / Testing	Graphic Log	Group Classification	Encountered Water	MATERIAL DESCRIPTION	Moisture Content, %	REMARKS
					SP-SM		Brown and gray mottled fine to medium sand with silt (loose, moist)		
	1								
	2								Rapid water seepage and heavy caving caused exploration HA-5 to collapse at about 2 feet below ground surface. An alternate location (HA-5A) was advanced about 20 feet north of HA-5 to achieve greater sample depths.
	3				SM		Gray fine silty sand (loose, moist)		
	4		HA-5A(3.5-4.0) CA					27.7	

Hand auger completed at approximately 4.5 feet
Moderate to rapid groundwater seepage observed at 4.5 feet
Severe caving and refusal at 4.5 feet

Note: See Figure A-1 for explanation of symbols

Preliminary Draft for Agency Review

Spokane: Date:5/14/14 Path:P:\15\15387014\00\GINT\15387014\00.GPJ DBTemplate:LibTemplate:GEOENGINEERS8.GDT/GEI8_TESTPIT_1P_GEOTEC

Log of Hand Auger HA-5A

GEOENGINEERS

Project: Lower Clark Fork River Delta Sediment Assessment
Project Location: Bonner County, Idaho
Project Number: 15387-014-00

Figure A-7
Sheet 1 of 1

Date Excavated: 4/15/2014 Logged By: EBD

Equipment: Hand Auger Total Depth (ft) 6.5

Elevation (feet)	Depth (feet)	SAMPLE: Testing Sample	SAMPLE: Sample Name / Testing	Graphic Log	Group Classification	Encountered Water	MATERIAL DESCRIPTION	Moisture Content, %	REMARKS
					SM		Gray silty fine to medium sand (very loose, moist)		
	1								
	2	X	HA-6(2.0-2.5) CA			▽		34.6	
	3								
	4	X	HA-6(4.0-4.5) CA					34.6	
					SM		Gray silty fine to coarse sand (loose, moist)		
	5								
	6	X	HA-6(6.0-6.5) CA					29.3	

Hand auger completed at approximately 6.5 feet
Rapid groundwater seepage observed at 2 feet
Moderate caving observed

Note: See Figure A-1 for explanation of symbols

Preliminary Draft for Agency Review

Spokane: Date:5/14/14 Path:P:\15\15387014\00\GINT\15387014\00.GPJ DBTemplate:LibTemplate:GEOENGINEERS8.GDT/GEI8_TESTPIT_1P_GEOTEC

Log of Hand Auger HA-6

GEOENGINEERS

Project: Lower Clark Fork River Delta Sediment Assessment
Project Location: Bonner County, Idaho
Project Number: 15387-014-00

Figure A-8
Sheet 1 of 1

USCG0013533/27

Date Excavated: 4/15/2014 Logged By: SWM

Equipment: Hand Auger Total Depth (ft) 6.5

Elevation (feet)	Depth (feet)	SAMPLE: Testing Sample	SAMPLE: Sample Name Testing	Graphic Log	Group Classification	Encountered Water	MATERIAL DESCRIPTION	Moisture Content, %	REMARKS
					SP		Brown fine to coarse sand (loose, moist)		
	1				SP-SM		Brown fine sand with silt (loose, moist)		
		X	HA-7(1.5-2.0) CA					17.7	
	2								
	3						With increased fines content		
	4	X	HA-7(4.0-4.5) CA					23.3	
	5					▽	Becomes wet at 5 feet		
	6	X	HA-7(6.0-6.5) CA					22.3	

Hand auger completed at approximately 6.5 feet
Moderate to rapid groundwater seepage observed at 5 feet
Severe caving observed at 5 feet

Note: See Figure A-1 for explanation of symbols

Preliminary Draft for Agency Review

Spokane: Date:5/14/14 Path:P:\15\15387014\00\GINT\15387014\00.GPJ DBTemplate:LibTemplate:GEOENGINEERS8.GDT/GEI8_TESTPIT_1P_GEOTEC

Log of Hand Auger HA-7

GEOENGINEERS

Project: Lower Clark Fork River Delta Sediment Assessment
Project Location: Bonner County, Idaho
Project Number: 15387-014-00

Figure A-9
Sheet 1 of 1

USCG0013543/27

Date Excavated: 4/16/2014 Logged By: SWM

Equipment: Hand Auger Total Depth (ft) 7.0

Elevation (feet)	Depth (feet)	SAMPLE: Testing Sample	SAMPLE: Sample Name / Testing	Graphic Log	Group Classification	Encountered Water	MATERIAL DESCRIPTION	Moisture Content, %	REMARKS
					SM		Brownish-gray fine silty sand with organic matter (loose, moist)		
	1								
		X	HA-8(1.5-2.0) CA		ML		Gray and brown mottled sandy silt with organic matter (soft, moist)	30.1	
	2								
	3					▽			
	4	X	HA-8(4.0-4.5) CA		SM		Gray and brown mottled silty fine sand with organic matter (loose, wet)	26.8	
	5								
	6	X	HA-8(6.0-6.5) CA					30.5	
	7								

Hand auger completed at approximately 7 feet
Moderate groundwater seepage observed at 3.5 feet
Moderate caving observed

Note: See Figure A-1 for explanation of symbols

Preliminary Draft for Agency Review

Spokane: Date:5/14/14 Path:P:\15\15387014\00\GINT\15387014\00.GPJ DBTemplate:LibTemplate:GEOENGINEERS8.GDT/GEI8_TESTPIT_1P_GEOTEC

Log of Hand Auger HA-8

GEOENGINEERS

Project: Lower Clark Fork River Delta Sediment Assessment
Project Location: Bonner County, Idaho
Project Number: 15387-014-00

Figure A-10
Sheet 1 of 1

USCG0013553/27

Date Excavated: 4/16/2014 Logged By: EBD

Equipment: Hand Auger Total Depth (ft) 6.5

Elevation (feet)	Depth (feet)	SAMPLE: Testing Sample	SAMPLE: Sample Name / Testing	Graphic Log	Group Classification	Encountered Water	MATERIAL DESCRIPTION	Moisture Content, %	REMARKS
					ML		Gray and brown mottled sandy silt with organic matter (soft, moist)		
	1								
		X	HA-9(1.5-2.0) CA					26.3	
	2								
	3				SP-SM		Gray and brown mottled fine to medium sand with silt (loose, moist)		
	4	X	HA-9(4.0-4.5) CA			▽		26.1	
	5								
	6	X	HA-9(6.0-6.5) CA				With gravel	24.4	

Hand auger completed at approximately 6.5 feet
Moderate to rapid groundwater seepage observed at 4 feet
Severe caving observed at 6.5 feet

Note: See Figure A-1 for explanation of symbols

Preliminary Draft for Agency Review

Spokane: Date:5/14/14 Path:P:\15\15387014\00\GINT\15387014\00.GPJ DBTemplate:LibTemplate:GEOENGINEERS8.GDT/GEI8_TESTPIT_1P_GEOTEC

Log of Hand Auger HA-9

GEOENGINEERS

Project: Lower Clark Fork River Delta Sediment Assessment
Project Location: Bonner County, Idaho
Project Number: 15387-014-00

Figure A-11
Sheet 1 of 1

USCG0013563/27

Date Excavated: 4/16/2014 Logged By: EBD

Equipment: Hand Auger Total Depth (ft) 8.0

Elevation (feet)	Depth (feet)	SAMPLE: Testing Sample	SAMPLE: Sample Name / Testing	Graphic Log	Group Classification	Encountered Water	MATERIAL DESCRIPTION	Moisture Content, %	REMARKS
					SM		Brownish-gray silty fine sand with organic matter (loose, moist)		
	1								
		X	HA-10(1.5-2.0) CA					30.2	
	2								
					ML		Gray and brown mottled sandy silt with organic matter (soft, moist)		
	3								
					SM		Light gray and brown mottled silty fine sand with organic matter (loose,wet)		
	4	X	HA-10(4.0-4.5) CA					27.1	
	5								
					SP-SM		Light gray and brown mottled fine to medium sand with silt and organic matter (loose, wet)		
	6	X	HA-10(6.0-6.5) CA			▽		21.9	
	7								
		X	HA-10(7.5-8.0) CA					23	
	8						Hand auger completed at 8 approximately feet Rapid groundwater seepage observed at 6 feet Severe caving observed and refusal at 8 feet		

Note: See Figure A-1 for explanation of symbols

Preliminary Draft for Agency Review

Spokane: Date:5/14/14 Path:P:\15\15387014\00\GINT\15387014\00.GPJ DBTemplate:LibTemplate:GEOENGINEERS8.GDT/GEI8_TESTPIT_1P_GEOTEC

Log of Hand Auger HA-10

GEOENGINEERS

Project: Lower Clark Fork River Delta Sediment Assessment

Project Location: Bonner County, Idaho

Project Number: 15387-014-00

Figure A-12

Sheet 1 of 1

Date Excavated: 4/15/2014 Logged By: EBD

Equipment: Hand Auger Total Depth (ft) 5.0

Elevation (feet)	Depth (feet)	SAMPLE: Testing Sample	SAMPLE: Sample Name / Testing	Graphic Log	Group Classification	Encountered Water	MATERIAL DESCRIPTION	Moisture Content, %	REMARKS
					SM		Brownish-gray silty fine sand with organic matter (very loose, moist)		
	1								
			HA-11(1.5-2.0) CA					31.5	
	2								
	3				ML		Gray sandy silt with organic matter (soft, wet)		
	4		HA-11(4.0-4.5) CA					28.9	
			HA-11(4.5-5.0) CA					30.8	Returned on 4/16/14 to use sediment sampler to obtain sample from 4.5 to 5 feet
	5								

Hand auger completed at approximately 5 feet
Moderate groundwater seepage observed at 0.5 feet
Severe caving observed and refusal at 4.5 feet

Note: See Figure A-1 for explanation of symbols

Preliminary Draft for Agency Review

Spokane: Date:5/14/14 Path:P:\15\15387014\00\GINT\15387014\00.GPJ DBTemplate:LibTemplate:GEOENGINEERS8.GDT/GEI8_TESTPIT_1P_GEOTEC

Log of Hand Auger HA-11

GEOENGINEERS

Project: Lower Clark Fork River Delta Sediment Assessment
Project Location: Bonner County, Idaho
Project Number: 15387-014-00

Figure A-13
Sheet 1 of 1

USCG0013593/27

Date Excavated: 4/16/2014 Logged By: EBD

Equipment: Hand Auger Total Depth (ft) 6.5

Elevation (feet)	Depth (feet)	SAMPLE: Testing Sample	SAMPLE: Sample Name Testing	Graphic Log	Group Classification	Encountered Water	MATERIAL DESCRIPTION	Moisture Content, %	REMARKS
					ML		Brownish-gray sandy silt with organic matter (soft, moist)		
	1								
			HA-12(1.5-2.0) CA					27.7	
	2								
	3				SM		Gray and brown mottled silty fine sand with organic matter (loose, wet)		
	4		HA-12(4.0-4.5) CA			▽		27.6	
	5								
			HA-12(5.5-6.0) CA					29.1	
	6								

Hand auger completed at approximately 6.5 feet
Moderate groundwater seepage observed at 4 feet
Severe caving observed and refusal at 6.5 feet

Note: See Figure A-1 for explanation of symbols

Preliminary Draft for Agency Review

Spokane: Date:5/14/14 Path:P:\15\15387014\00\GINT\15387014\00.GPJ DBTemplate:LibTemplate:GEOENGINEERS8.GDT/GEI8_TESTPIT_1P_GEOTEC

Log of Hand Auger HA-12

GEOENGINEERS

Project: Lower Clark Fork River Delta Sediment Assessment
Project Location: Bonner County, Idaho
Project Number: 15387-014-00

Figure A-14
Sheet 1 of 1

USCG0013593/27

Date Excavated: 4/15/2014 Logged By: EBD

Equipment: Hand Auger Total Depth (ft) 5.0

Elevation (feet)	Depth (feet)	SAMPLE: Testing Sample	SAMPLE: Sample Name / Testing	Graphic Log	Group Classification	Encountered Water	MATERIAL DESCRIPTION	Moisture Content, %	REMARKS
					ML		Brownish-gray sandy silt with organic matter (medium stiff, moist)		
	1								
		X	HA-13(1.5-2.0) CA					25.8	
	2								
	3								
					SM	▽	Light gray to brown mottled silty fine sand (loose, wet)		
	4								
		X	HA-13(4.5-5.0) CA					25.8	
	5								

Hand auger completed at approximately 5 feet
Moderate groundwater seepage observed at 3.5 feet
Severe caving observed and refusal on gravel at 5 feet

Note: See Figure A-1 for explanation of symbols

Preliminary Draft for Agency Review

Spokane: Date:5/14/14 Path:P:\15\15387014\00\GINT\15387014\00.GPJ DBTemplate:LibTemplate:GEOENGINEERS8.GDT/GEI8_TESTPIT_1P_GEOTEC

Log of Hand Auger HA-13

GeoEngineers

Project: Lower Clark Fork River Delta Sediment Assessment
Project Location: Bonner County, Idaho
Project Number: 15387-014-00

Figure A-15
Sheet 1 of 1

Date Excavated: 4/15/2014 Logged By: EBD

Equipment: Hand Auger Total Depth (ft) 6.5

Elevation (feet)	Depth (feet)	SAMPLE: Testing Sample	SAMPLE: Sample Name / Testing	Graphic Log	Group Classification	Encountered Water	MATERIAL DESCRIPTION	Moisture Content, %	REMARKS
					SM		Brownish-gray silty fine sand with organic matter (loose, moist)		
	1								
		X	HA-14(1.5-2.0) CA					39.1	
	2				ML	▽	Gray sandy silt with organic matter (medium stiff, wet)		
	3								
	4	X	HA-14(4.0-4.5) CA					28.8	
	5				SM		Gray silty fine to medium sand (loose, wet)		
	6	X	HA-14(6.0-6.5) CA		SP-SM		Gray fine to medium sand with silt (loose, wet)	30.3	

Hand auger completed at approximately 6.5 feet
Moderate groundwater seepage observed at 2 feet
Severe caving observed and refusal at 6.5 feet

Note: See Figure A-1 for explanation of symbols

Preliminary Draft for Agency Review

Spokane: Date:5/14/14 Path:P:\15\15387014\00\GINT\15387014\00.GPJ DBTemplate:LibTemplate:GEOENGINEERS8.GDT/GEI8_TESTPIT_1P_GEOTEC

Log of Hand Auger HA-14

GeoEngineers

Project: Lower Clark Fork River Delta Sediment Assessment
Project Location: Bonner County, Idaho
Project Number: 15387-014-00

Figure A-16
Sheet 1 of 1

Date Excavated: 4/15/2014 Logged By: EBD

Equipment: Hand Auger Total Depth (ft) 7.0

Elevation (feet)	Depth (feet)	SAMPLE: Testing Sample	SAMPLE: Sample Name / Testing	Graphic Log	Group Classification	Encountered Water	MATERIAL DESCRIPTION	Moisture Content, %	REMARKS
					SP-SM		Gray fine to medium sand with silt (loose, wet)		
	1				ML		Gray sandy silt with organic matter (soft, wet)		
			HA-15(1.5-2.0) CA					30.2	
	2					▽			
	3								Refusal at 3 feet; the boring was moved about 6 feet north and re-augered
	4		HA-15(4.0-4.5) CA					34.5	
					SM		Brownish-gray silty fine sand with organic matter (loose, wet)		
	5								
	6		HA-15(6.0-6.5) CA		SP		Gray fine to medium sand with trace silt (loose, wet)	22.7	
	7								

Hand auger completed at approximately 7 feet
Moderate groundwater seepage observed at 2 feet
Severe caving observed at 7 feet

Note: See Figure A-1 for explanation of symbols

Preliminary Draft for Agency Review

Log of Hand Auger HA-15

GeoEngineers

Project: Lower Clark Fork River Delta Sediment Assessment
Project Location: Bonner County, Idaho
Project Number: 15387-014-00

Figure A-17
Sheet 1 of 1

Spokane: Date:5/14/14 Path:P:\15\15387014\00\GINT\15387014\00.GPJ DBTemplate:LibTemplate:GEOENGINEERS8.GDT/GEI8_TESTPIT_1P_GEOTEC

USCG0013623/27

Date Excavated: 4/15/2014 Logged By: SWM

Equipment: Hand Auger Total Depth (ft) 7.0

Elevation (feet)	Depth (feet)	SAMPLE: Testing Sample	SAMPLE: Sample Name / Testing	Graphic Log	Group Classification	Encountered Water	MATERIAL DESCRIPTION	Moisture Content, %	REMARKS
					ML		Gray silt with trace fine sand (stiff, moist)		
	1				ML		Gray with orange mottled clayey silt and trace fine sand (stiff, moist)		
	2	X	HA-16(2.0-2.5) CA					24.1	
	3				SM		Gray silty fine to medium sand (loose, moist)		
	4	X	HA-16(4.0-4.5) CA					31	
	5								
	6				ML		Gray silt (stiff, wet)		
		X	HA-16(6.5-7.0) CA					25.3	
	7				SP		Gray fine to coarse sand with trace silt (medium dense, wet)		

Hand auger completed at approximately 7 feet
No groundwater seepage observed
No caving observed

Note: See Figure A-1 for explanation of symbols

Preliminary Draft for Agency Review

Spokane: Date:5/14/14 Path:P:\15\15387014\00\GINT\15387014\00.GPJ DBTemplate:LibTemplate:GEOENGINEERS8.GDT/GEI8_TESTPIT_1P_GEOTEC

Log of Hand Auger HA-16

GeoEngineers

Project: Lower Clark Fork River Delta Sediment Assessment
Project Location: Bonner County, Idaho
Project Number: 15387-014-00

Figure A-18
Sheet 1 of 1

USCG0013633/27

Date Excavated: 4/15/2014 Logged By: EBD

Equipment: Hand Auger Total Depth (ft) 8.0

Elevation (feet)	Depth (feet)	SAMPLE: Testing Sample	SAMPLE: Sample Name / Testing	Graphic Log	Group Classification	Encountered Water	MATERIAL DESCRIPTION	Moisture Content, %	REMARKS
					ML		Brownish-gray sandy silt with organic matter (soft, moist)		
	1								
		X	HA-17(1.5-2.0) CA					29	
	2								
	3					▽			
	4	X	HA-17(4.0-4.5) CA		SM		Grayish-brown mottled silty fine sand with organic matter (medium dense, wet)	25.6	
	5								
	6	X	HA-17(6.0-6.5) CA					28.3	
	7				SP-SM		Gray fine sand with silt (loose, wet)		
	8						Hand auger completed at approximately 8 feet Moderate groundwater seepage observed at 3 feet Severe caving observed and refusal at 8 feet		

Note: See Figure A-1 for explanation of symbols

Preliminary Draft for Agency Review

Spokane: Date:5/14/14 Path:P:\15\15387014\00\GINT\15387014\00.GPJ DBTemplate:LibTemplate:GEOENGINEERS8.GDT/GEI8_TESTPIT_1P_GEOTEC

Log of Hand Auger HA-17

GeoEngineers

Project: Lower Clark Fork River Delta Sediment Assessment

Project Location: Bonner County, Idaho

Project Number: 15387-014-00

Figure A-19

Sheet 1 of 1

USCG0013643/27

Date Excavated: 4/15/2014 Logged By: EBD

Equipment: Hand Auger Total Depth (ft) 7.0

Elevation (feet)	Depth (feet)	SAMPLE: Testing Sample	SAMPLE: Sample Name / Testing	Graphic Log	Group Classification	Encountered Water	MATERIAL DESCRIPTION	Moisture Content, %	REMARKS
					SM		Gray silty fine sand with organic matter (loose, moist)		
	1								
		X	HA-18(1.5-2.0) CA					31.9	
	2								
	3				ML		Gray and brown mottled sandy silt (very soft, moist)		
	4	X	HA-18(4.0-4.5) CA			▽		27.2	
	5								
	6	X	HA-18(6.0-6.5) CA		SP-SM		Gray fine to medium sand with silt (loose, moist)	23.5	
	7						Hand auger completed at approximately 7 feet Moderate groundwater seepage observed at 4 feet Severe caving observed at 7 feet		

Note: See Figure A-1 for explanation of symbols

Preliminary Draft for Agency Review

Spokane: Date:5/14/14 Path:P:\15\15387014\00\GINT\15387014\00.GPJ DBTemplate:LibTemplate:GEOENGINEERS8.GDT/GEI8_TESTPIT_1P_GEOTEC

Log of Hand Auger HA-18

GEOENGINEERS

Project: Lower Clark Fork River Delta Sediment Assessment

Project Location: Bonner County, Idaho

Project Number: 15387-014-00

Figure A-20

Sheet 1 of 1

USCG0013653/27

Date Excavated: 4/15/2014 Logged By: EBD

Equipment: Hand Auger Total Depth (ft) 6.5

Elevation (feet)	Depth (feet)	SAMPLE: Testing Sample	SAMPLE: Sample Name / Testing	Graphic Log	Group Classification	Encountered Water	MATERIAL DESCRIPTION	Moisture Content, %	REMARKS
					SM		Gray and brown mottled fine silty sand with organic matter, with sandy silt seams (loose, moist)		
	1								
		X	HA-19(1.5-2.0) CA					33	
	2				ML		Gray and brown mottled sandy silt with organic matter (soft, moist)		
	3								
	4	X	HA-19(4.0-4.5) CA		SM		Gray silty fine sand with organic matter (loose, moist)	26.4	
	5								
					SP		Gray fine to medium sand with trace silt (loose, moist)		
	6	X	HA-19(6.0-6.5) CA			▽		15.2	

Hand auger completed at approximately 6.5 feet
Slight groundwater seepage observed at 6 feet
Severe caving observed and refusal on gravel at 6.5 feet

Note: See Figure A-1 for explanation of symbols

Preliminary Draft for Agency Review

Spokane: Date:5/14/14 Path:P:\15\15387014\00\GINT\15387014\00.GPJ DBTemplate:LibTemplate:GEOENGINEERS8.GDT/GEI8_TESTPIT_1P_GEOTEC

Log of Hand Auger HA-19

GeoEngineers

Project: Lower Clark Fork River Delta Sediment Assessment
Project Location: Bonner County, Idaho
Project Number: 15387-014-00

Figure A-21
Sheet 1 of 1

USCG0013663/27

Date Excavated: 4/15/2014 Logged By: SWM

Equipment: Hand Auger Total Depth (ft) 7.0

Elevation (feet)	Depth (feet)	SAMPLE: Testing Sample	SAMPLE: Sample Name / Testing	Graphic Log	Group Classification	Encountered Water	MATERIAL DESCRIPTION	Moisture Content, %	REMARKS
					ML		Gray silt with trace fine sand (stiff, moist)		
	1								
		X	HA-20(1.5-2.0) CA					19.1	
	2				SM		Grayish-brown silty fine to medium sand (loose, moist)		
	3					▽			
	4								
		X	HA-20(4.5-5.0) CA					22.4	
	5								
	6								
		X	HA-20(6.5-7.0) CA					25.1	
	7								

Hand auger completed at approximately 7 feet
Slight groundwater seepage observed at 3 feet
No caving observed

Note: See Figure A-1 for explanation of symbols

Preliminary Draft for Agency Review

Spokane: Date:5/14/14 Path:P:\15\15387014\00\GINT\15387014\00.GPJ DBTemplate:LibTemplate:GEOENGINEERS8.GDT/GEI8_TESTPIT_1P_GEOTEC

Log of Hand Auger HA-20

GEOENGINEERS

Project: Lower Clark Fork River Delta Sediment Assessment
Project Location: Bonner County, Idaho
Project Number: 15387-014-00

Figure A-22
Sheet 1 of 1

USCG0013673/27

Date Excavated: 4/15/2014 | Logged By: SWM

Equipment: Hand Auger | Total Depth (ft) 9.5

Elevation (feet)	Depth (feet)	SAMPLE: Testing Sample	SAMPLE: Sample Name / Testing	Graphic Log	Group Classification	Encountered Water	MATERIAL DESCRIPTION	Moisture Content, %	REMARKS
					SC-SM		Gray silty clayey fine sand (loose, moist)		
	1								
		X	HA-21(1.5-2.0) CA					23.7	
	2								
	3								
	4				SM	▽	Gray silty fine to medium sand (loose, moist)		
		X	HA-21(4.5-5.0) CA					23	
	5								
					ML		Gray sandy silt (soft, wet)		
	6								
		X	HA-21(6.5-7.0) CA					24.7	
	7								
	8				SM		Gray silty fine to medium sand (loose, wet)		
	9	X	HA-21(9.0-9.5) CA					23.5	

Hand auger completed at approximately 9.5 feet
Moderate to rapid groundwater seepage observed at 4.5 feet
No caving observed

Note: See Figure A-1 for explanation of symbols

Preliminary Draft for Agency Review

Spokane: Date:5/14/14 Path:P:\15\15387014\00\GINT\15387014\00.GPJ DBTemplate:LibTemplate:GEOENGINEERS8.GDT/GEI8_TESTPIT_1P_GEOTEC

Log of Hand Auger HA-21

GEOENGINEERS

Project: Lower Clark Fork River Delta Sediment Assessment
Project Location: Bonner County, Idaho
Project Number: 15387-014-00

Figure A-23
Sheet 1 of 1

Date Excavated: 4/15/2014 Logged By: SWM

Equipment: Hand Auger Total Depth (ft) 7.0

Elevation (feet)	Depth (feet)	SAMPLE: Testing Sample	SAMPLE: Sample Name / Testing	Graphic Log	Group Classification	Encountered Water	MATERIAL DESCRIPTION	Moisture Content, %	REMARKS
					SP-SM		Gray fine to coarse sand with silt (loose, moist)		
	1				ML		Gray silt with fine sand (soft, moist)		
							With increased clay fines		
	2	X	HA-22(2.0-2.5) CA				Grades to light gray with increased silt content	31.1	
	3								
	4								
		X	HA-22(4.5-5.0) CA					25.7	
	5				SM		Light gray silty fine to medium sand (loose, moist)		
	6					▽	Becomes medium dense and wet		
		X	HA-22(6.5-7.0) CA				With seams of black organic matter and brown decomposing wood (medium dense, wet)	29.9	
	7						Hand auger completed at approximately 7 feet Moderate to rapid groundwater seepage observed at 6 feet No caving observed		

Note: See Figure A-1 for explanation of symbols

Preliminary Draft for Agency Review

Spokane: Date:5/14/14 Path:P:\15\15387014\00\GINT\15387014\00.GPJ DBTemplate:LibTemplate:GEOENGINEERS8.GDT/GEI8_TESTPIT_1P_GEOTEC

Log of Hand Auger HA-22

GeoEngineers

Project: Lower Clark Fork River Delta Sediment Assessment

Project Location: Bonner County, Idaho

Project Number: 15387-014-00

Figure A-24

Sheet 1 of 1

USCG0013693/27

Date Excavated: 4/15/2014 Logged By: SWM

Equipment: Hand Auger Total Depth (ft) 7.0

Elevation (feet)	Depth (feet)	SAMPLE: Testing Sample	SAMPLE: Sample Name / Testing	Graphic Log	Group Classification	Encountered Water	MATERIAL DESCRIPTION	Moisture Content, %	REMARKS
					ML		Gray silt with sand and organic matter (wood debris) (soft, moist)		
	1								
			HA-23(1.5-2.0) CA					25	
	2								
	3								
	4					▽			
			HA-23(4.5-5.0) CA					23.3	
	5				SM		Gray silty fine to medium sand (loose, wet)		
	6								
			HA-23(6.5-7.0) CA					27.6	
	7								

Hand auger completed at approximately 7 feet
Moderate to rapid groundwater seepage observed at 4 feet
No caving observed

Note: See Figure A-1 for explanation of symbols

Preliminary Draft for Agency Review

Spokane: Date:5/14/14 Path:P:\15\15387014\00\GINT\15387014\00.GPJ DBTemplate:LibTemplate:GEOENGINEERS8.GDT/GEI8_TESTPIT_1P_GEOTEC

Log of Hand Auger HA-23

GeoEngineers

Project: Lower Clark Fork River Delta Sediment Assessment
Project Location: Bonner County, Idaho
Project Number: 15387-014-00

Figure A-25
Sheet 1 of 1

Date Excavated: 4/15/2014 Logged By: SWM

Equipment: Hand Auger Total Depth (ft) 7.5

Elevation (feet)	Depth (feet)	SAMPLE: Testing Sample	SAMPLE: Sample Name / Testing	Graphic Log	Group Classification	Encountered Water	MATERIAL DESCRIPTION	Moisture Content, %	REMARKS
					ML		Gray sandy silt with brown mottling (soft, moist)		
	1								
			HA-24(1.5-2.0) CA					26.7	
	2								
	3								
	4					▽			
			HA-24(4.5-5.0) CA					24.4	
	5								
	6								
					SP-SM		Gray fine to medium sand with silt (loose, wet)		
	7		HA-24(7.0-7.5) CA					24.3	

Hand auger completed at approximately 7.5 feet
Moderate to rapid groundwater seepage observed at 4 feet
No caving observed

Note: See Figure A-1 for explanation of symbols

Preliminary Draft for Agency Review

Spokane: Date:5/14/14 Path:P:\15\15387014\00\GINT\15387014\00.GPJ DBTemplate:LibTemplate:GEOENGINEERS8.GDT/GEI8_TESTPIT_1P_GEOTEC

Log of Hand Auger HA-24

GeoEngineers

Project: Lower Clark Fork River Delta Sediment Assessment
Project Location: Bonner County, Idaho
Project Number: 15387-014-00

Figure A-26
Sheet 1 of 1

Date Excavated: 4/15/2014 Logged By: SWM

Equipment: Hand Auger Total Depth (ft) 9.0

Elevation (feet)	Depth (feet)	SAMPLE: Testing Sample	SAMPLE: Sample Name / Testing	Graphic Log	Group Classification	Encountered Water	MATERIAL DESCRIPTION	Moisture Content, %	REMARKS
					ML		Brown and gray mottled sandy silt (soft, moist)		
	1								
	2					▽			
		X	HA-25(2.5-3.0) CA					27.2	
	3								
	4								
		X	HA-25(4.5-5.0) CA					24.1	
	5				SM		Brown silty fine to medium sand (loose, wet)		
	6								
		X	HA-25(6.5-7.0) CA					28	
	7								
	8								
		X	HA-25(8.5-9.0) CA					18.3	
	9								

Hand auger completed at approximately 9 feet
Moderate to rapid groundwater seepage observed at 2 feet
No caving observed

Note: See Figure A-1 for explanation of symbols

Preliminary Draft for Agency Review

Spokane: Date:5/14/14 Path:P:\15\15387014\00\GINT\15387014\00.GPJ DBTemplate:LibTemplate:GEOENGINEERS8.GDT/GEI8_TESTPIT_1P_GEOTEC

Log of Hand Auger HA-25

GeoEngineers

Project: Lower Clark Fork River Delta Sediment Assessment
Project Location: Bonner County, Idaho
Project Number: 15387-014-00

Figure A-27
Sheet 1 of 1

USCG0013723/27

Date Excavated: 4/16/2014 Logged By: SWM

Equipment: Hand Auger Total Depth (ft) 9.5

Elevation (feet)	Depth (feet)	SAMPLE: Testing Sample	SAMPLE: Sample Name / Testing	Graphic Log	Group Classification	Encountered Water	MATERIAL DESCRIPTION	Moisture Content, %	REMARKS
					SM		Grayish-brown silty fine sand with orange mottling (loose, moist)		
	1								
		X	HA-26(1.5-2.0) CA			▽		30.6	
	2								
	3								
	4						Lacking mottling		
	5	X	HA-25(5.0-5.5) CA					30.4	
	6						Grayish-brown silty fine to medium sand (dense, wet)		
		X	HA-25(6.5-7.0) CA					24.4	
	7								
	8								
	9	X	HA-25(9.0-9.5) CA					23.9	
							With increased silt and clay		

Hand auger completed at approximately 9.5 feet
Moderate to rapid groundwater seepage observed at 1.5 feet
No caving observed

Note: See Figure A-1 for explanation of symbols

Preliminary Draft for Agency Review

Spokane: Date:5/14/14 Path:P:\15\15387014\00\GINT\15387014\00.GPJ DBTemplate:LibTemplate:GEOENGINEERS8.GDT/GEI8_TESTPIT_1P_GEOTEC

Log of Hand Auger HA-26

GeoEngineers

Project: Lower Clark Fork River Delta Sediment Assessment
Project Location: Bonner County, Idaho
Project Number: 15387-014-00

Figure A-28
Sheet 1 of 1

USCG0013733/27

Date Excavated: 4/15/2014 | Logged By: SWM

Equipment: Hand Auger | Total Depth (ft) 7.0

Elevation (feet)	Depth (feet)	SAMPLE: Testing Sample	SAMPLE: Sample Name / Testing	Graphic Log	Group Classification	Encountered Water	MATERIAL DESCRIPTION	Moisture Content, %	REMARKS
					SM		Gray and brown mottled silty fine to medium sand with clay and organic matter (decomposed wood) (loose, moist)		
	1								
			HA-27(1.5-2.0) CA					31.4	
	2					▽			
	3				ML		Gray and brown mottled sandy silt (oxidation stains) (very stiff, wet)		
	4								
			HA-27(4.5-5.0) CA					21.3	
	5								
	6								
			HA-27(6.5-7.0) CA					23.6	
	7						Hand auger completed at approximately 7 feet Moderate to rapid groundwater seepage observed at 2 feet No caving observed		

Note: See Figure A-1 for explanation of symbols

Preliminary Draft for Agency Review

Spokane: Date:5/14/14 Path:P:\15\15387014\00\GINT\15387014\00.GPJ DBTemplate:LibTemplate:GEOENGINEERS8.GDT/GEI8_TESTPIT_1P_GEOTEC

Log of Hand Auger HA-27

GeoEngineers

Project: Lower Clark Fork River Delta Sediment Assessment

Project Location: Bonner County, Idaho

Project Number: 15387-014-00

Figure A-29

Sheet 1 of 1

USCG0013743/27

Date Excavated: 4/16/2014 Logged By: SWM

Equipment: Hand Auger Total Depth (ft) 7.0

Elevation (feet)	Depth (feet)	SAMPLE: Testing Sample	SAMPLE: Sample Name / Testing	Graphic Log	Group Classification	Encountered Water	MATERIAL DESCRIPTION	Moisture Content, %	REMARKS
					SP-SM		Grayish-brown fine to medium sand with silt (loose, moist)		
	1								
					ML		Brownish-gray sandy silt (soft, wet)		
			HA-28(1.5-2.0) CA					27	
	2					▽			
	3								
	4								
			HA-28(4.5-5.0) CA					26.4	
	5				SM		Brownish-gray silty fine to medium sand with organic matter (black decomposed wood) (loose, wet)		
	6								
			HA-28(6.5-7.0) CA					26.8	
	7								

Hand auger completed at approximately 7 feet
Moderate to rapid groundwater seepage observed at 2 feet
No caving observed

Note: See Figure A-1 for explanation of symbols

Preliminary Draft for Agency Review

Spokane: Date:5/14/14 Path:P:\15\15387014\00\GINT\15387014\00.GPJ DBTemplate:LibTemplate:GEOENGINEERS8.GDT/GEI8_TESTPIT_1P_GEOTEC

Log of Hand Auger HA-28

GEOENGINEERS

Project: Lower Clark Fork River Delta Sediment Assessment
Project Location: Bonner County, Idaho
Project Number: 15387-014-00

Figure A-30
Sheet 1 of 1

USCG0013753/27

Date Excavated: 4/16/2014 Logged By: SWM

Equipment: Hand Auger Total Depth (ft) 9.5

Elevation (feet)	Depth (feet)	SAMPLE: Testing Sample	SAMPLE: Sample Name / Testing	Graphic Log	Group Classification	Encountered Water	MATERIAL DESCRIPTION	Moisture Content, %	REMARKS
					SM		Brown silty fine to medium sand with orange mottling (loose, moist)		
	1								
		X	HA-29(1.5-2.0) CA					22.4	
	2								
	3								
						▽	Becomes wet		
	4						Grades to fine sand		
		X	HA-29(4.5-5.0) CA					27.2	
	5								
	6								
		X	HA-29(6.5-7.0) CA					26.4	
	7								
	8								
	9	X	HA-29(9.0-9.5) CA					27.4	
							Gravel at 9.5 feet (2" diameter)		

Hand auger completed at approximately 9.5 feet
Moderate to rapid groundwater seepage observed at 3.5 feet
No caving observed

Note: See Figure A-1 for explanation of symbols

Preliminary Draft for Agency Review

Spokane: Date:5/14/14 Path:P:\15\15387014\00\GINT\15387014\00.GPJ DBTemplate:LibTemplate:GEOENGINEERS8.GDT/GEI8_TESTPIT_1P_GEOTEC

Log of Hand Auger HA-29

GeoEngineers

Project: Lower Clark Fork River Delta Sediment Assessment
Project Location: Bonner County, Idaho
Project Number: 15387-014-00

Figure A-31
Sheet 1 of 1

USCG0013763/27

Date Excavated: 4/16/2014 | Logged By: SWM

Equipment: Hand Auger | Total Depth (ft) 7.0

Elevation (feet)	Depth (feet)	SAMPLE: Testing Sample	SAMPLE: Sample Name / Testing	Graphic Log	Group Classification	Encountered Water	MATERIAL DESCRIPTION	Moisture Content, %	REMARKS
					SM		Grayish-brown silty fine to medium sand with slight orange mottling (loose, moist)		
	1								
		X	HA-30(1.5-2.0) CA					23.7	
	2					▽	Becomes wet		
	3						With increased fines content		
	4	X	HA-30(4.0-4.5) CA					28.1	
	5						With increased sand at 5 feet		
	6								Refusal at 5.5 feet, boring moved 5 feet and advanced to 7 feet below ground surface
		X	HA-30(6.5-7.0) CA					29.7	
	7						Hand auger completed at 7 approximately feet Moderate to rapid groundwater seepage observed at 2.5 feet No caving observed		

Note: See Figure A-1 for explanation of symbols

Preliminary Draft for Agency Review

Spokane: Date:5/14/14 Path:P:\15\15387014\00\GINT\15387014\00.GPJ DBTemplate:LibTemplate:GEOENGINEERS8.GDT/GEI8_TESTPIT_1P_GEOTEC

Log of Hand Auger HA-30

GeoEngineers

Project: Lower Clark Fork River Delta Sediment Assessment

Project Location: Bonner County, Idaho

Project Number: 15387-014-00

Figure A-32

Sheet 1 of 1

Date Excavated: 4/16/2014 Logged By: SWM

Equipment: Hand Auger Total Depth (ft) 8.0

Elevation (feet)	Depth (feet)	SAMPLE: Testing Sample	SAMPLE: Sample Name / Testing	Graphic Log	Group Classification	Encountered Water	MATERIAL DESCRIPTION	Moisture Content, %	REMARKS
					SM		Brown with orange mottled silty fine to medium sand (loose, moist)		
	1								
			HA-31(1.5-2.0) CA					21.6	
	2		HA-31(2.0-2.5) CA				Becomes less dense and with increased moisture (very loose, moist)	28	
	3								
	4					▽	Becomes wet		
			HA-31(4.5-5.0) CA				Increased sand content	28.8	
	5								
	6								
	7								
	8						Hand auger completed at approximately 8 feet Moderate to rapid groundwater seepage observed at 4 feet No caving observed		

Note: See Figure A-1 for explanation of symbols

Preliminary Draft for Agency Review

Spokane: Date:5/14/14 Path:P:\15\15387014\00\GINT\15387014\00.GPJ DBTemplate:LibTemplate:GEOENGINEERS8.GDT/GEI8_TESTPIT_1P_GEOTEC

Log of Hand Auger HA-31

GEOENGINEERS

Project: Lower Clark Fork River Delta Sediment Assessment

Project Location: Bonner County, Idaho

Project Number: 15387-014-00

Figure A-33

Sheet 1 of 1

USCG0013793/27

Date Excavated: 4/16/2014 | Logged By: SWM

Equipment: Hand Auger | Total Depth (ft) 9.5

Elevation (feet)	Depth (feet)	SAMPLE: Testing Sample	SAMPLE: Sample Name / Testing	Graphic Log	Group Classification	Encountered Water	MATERIAL DESCRIPTION	Moisture Content, %	REMARKS
					SM		Brown silty fine to medium sand with orange mottling (loose, moist)		
	1								
		X	HA-32(1.5-2.0) CA		ML		Dark gray sandy silt with black organic matter (soft, moist)	35.9	
	2								
	3						Grades to light gray with wood debris and roots (stiff, moist)		
	4								
		X	HA-32(4.5-5.0) CA					31.1	
	5						With increased silt content		
	6						Becomes soft		
		X	HA-32(6.5-7.0) CA					24.8	
	7				SM	▽	Gray silty fine to medium sand (loose, moist)		
	8				ML		Gray sandy silt (soft, moist)		
	9	X	HA-32(9.0-9.5) CA					25.6	

Hand auger completed at approximately 9.5 feet
Moderate to rapid groundwater seepage observed at 7.5 feet
No caving observed

Note: See Figure A-1 for explanation of symbols

Preliminary Draft for Agency Review

Spokane: Date:5/14/14 Path:P:\15\15387014\00\GINT\15387014\00.GPJ DBTemplate:LibTemplate:GEOENGINEERS8.GDT/GEI8_TESTPIT_1P_GEOTEC

Log of Hand Auger HA-32

GeoEngineers

Project: Lower Clark Fork River Delta Sediment Assessment
Project Location: Bonner County, Idaho
Project Number: 15387-014-00

Figure A-34
Sheet 1 of 1

USCG0013793/27

Date Excavated: 4/16/2014 | Logged By: SWM

Equipment: Hand Auger | Total Depth (ft) 7.0

Elevation (feet)	Depth (feet)	SAMPLE: Testing Sample	SAMPLE: Sample Name / Testing	Graphic Log	Group Classification	Encountered Water	MATERIAL DESCRIPTION	Moisture Content, %	REMARKS
					ML		Grayish-brown with orange mottling sandy silt with organic matter (wood debris) (soft, moist)		
	1								
	2	X	HA-33(2.0-2.5) CA					28.8	
	3						Grades to light gray silt with trace fine sand (stiff, moist)		
	4	X	HA-33(4.0-4.5) CA					22.9	
							Becomes soft with increase silt and sand and moisture		
	5								
	6				SM	▽	Light brown silty fine to medium sand (loose, wet)		
		X	HA-33(6.5-7.0) CA					27.4	
	7						Hand auger completed at approximately 7 feet Moderate to rapid groundwater seepage observed at 6 feet No caving observed		

Note: See Figure A-1 for explanation of symbols

Preliminary Draft for Agency Review

Spokane: Date:5/14/14 Path:P:\15\15387014\00\GINT\15387014\00.GPJ DBTemplate:LibTemplate:GEOENGINEERS8.GDT/GEI8_TESTPIT_1P_GEOTEC

Log of Hand Auger HA-33

GEOENGINEERS

Project: Lower Clark Fork River Delta Sediment Assessment

Project Location: Bonner County, Idaho

Project Number: 15387-014-00

Figure A-35

Sheet 1 of 1

APPENDIX B
Chemical Analytical Data and QA/QC Review

Preliminary Draft for Agency Review

APPENDIX B
CHEMICAL ANALYTICAL DATA AND QA/QC REVIEW

Sample Custody

Sample Containers and Storage

Soil samples obtained for chemical analysis were transferred in the field to laboratory-prepared sample containers and kept cool during transport to the testing laboratory.

Field Custody Procedures

Samples obtained for chemical analysis were transferred into clean sample containers supplied by the project analytical laboratory. Sufficient sample volume was obtained for the laboratory to complete the method-specific QC analyses. Possession of the samples was documented by the chain-of-custody. The chain-of-custody form were signed and dated in the appropriate places by parties involved with a transfer of custody.

Field Blank Samples

Two field blank samples were collected and analyzed. The analytical results for the field blanks were reviewed to evaluate the distilled water used on site for decontamination. Distilled water was used to fill a laboratory supplied sample container. Field blanks were analyzed for total metals (cadmium, copper, lead, mercury and zinc). No analytes were detected in the field blank samples.

Field Rinsate Samples

Two equipment rinsate blanks were collected. The analytical results for the rinsate blanks were reviewed to evaluate the adequacy of the equipment decontamination procedures and the possibility of cross-contamination caused by sampling equipment. The rinsate sample was collected using laboratory supplied deionized water used to rinse sampling equipment after decontamination. Low zinc concentrations (0.0120 and 0.00988 micrograms per liter) were detected from both rinsate samples. In our opinion, these low zinc concentrations do not indicate the likely potential for zinc cross contamination in the sediment samples.

Laboratory Custody Procedures

Upon receipt of the samples at the laboratory, whether delivered by GeoEngineers personnel or a courier service, the following procedures were followed.

The custody seals were broken, the chain-of-custody form was signed by the laboratory personnel, and the conditions of the samples were recorded on the form. The original chain-of-custody form remains with the laboratory and copies were returned to GeoEngineers.

LABORATORY QUALITY CONTROL

The laboratory maintains an internal quality assurance program as documented in its laboratory quality assurance manual. The laboratory uses a combination of blanks, surrogate recoveries, duplicates, matrix spike recoveries, matrix spike duplicate recoveries, blank spike recoveries and blank spike duplicate recoveries to evaluate the analytical results. The laboratory also uses data

Preliminary Draft for Agency Review

quality goals for individual chemicals or groups of chemicals based on the long-term performance of the test methods.

ANALYTICAL DATA REVIEW

GeoEngineers reviewed the laboratory reports for qualifiers; no qualifiers were noted in the laboratory report. In our opinion, the data is acceptable for its intended use.

Preliminary Draft for Agency Review

Anatek Labs, Inc.

1282 Alturas Drive • Moscow, ID 83843 • (208) 883-2839 • Fax (208) 882-9246 • email moscow@anateklabs.com
504 E Sprague Ste. D • Spokane WA 99202 • (509) 838-3999 • Fax (509) 838-4433 • email spokane@anateklabs.com

Client: GEO ENGINEERS
Address: 523 E 2ND
SPOKANE, WA 99202
Attn: SCOTT LATHEN

Batch #: 140417045
Project Name: CLARK FORK RIVER DELTA 15387-014-00

Analytical Results Report

Sample Number	140417045-001	**Sampling Date**	4/16/2014	**Date/Time Received**	4/17/2014 12:00 PM
Client Sample ID	HA-1(1.5-2.0)	**Sampling Time**	2:20 PM	**Extraction Date**	
Matrix	Soil	**Sample Location**			
Comments					

Parameter	Result	Units	PQL	Analysis Date	Analyst	Method	Qualifier
Cadmium	0.213	mg/Kg	0.073	4/28/2014 3:30:00 PM	KEB	EPA 6020A	
Copper	70.7	mg/Kg	0.073	4/28/2014 3:30:00 PM	KEB	EPA 6020A	
Lead	34.9	mg/Kg	0.073	4/28/2014 3:30:00 PM	KEB	EPA 6020A	
Mercury-ICPMS	0.177	mg/Kg	0.0073	4/28/2014 3:30:00 PM	KEB	EPA 6020A	
Zinc	66.3	mg/Kg	0.073	4/28/2014 3:30:00 PM	KEB	EPA 6020A	
%moisture	30.8	Percent		4/18/2014	BJR	%moisture	

Sample Number	140417045-002	**Sampling Date**	4/16/2014	**Date/Time Received**	4/17/2014 12:00 PM
Client Sample ID	HA-1(4.5-5.0)	**Sampling Time**	2:24 PM	**Extraction Date**	
Matrix	Soil	**Sample Location**			
Comments					

Parameter	Result	Units	PQL	Analysis Date	Analyst	Method	Qualifier
Cadmium	0.636	mg/Kg	0.07	4/28/2014 3:56:00 PM	KEB	EPA 6020A	
Copper	127	mg/Kg	0.702	4/28/2014 5:16:00 PM	KEB	EPA 6020A	
Lead	79.1	mg/Kg	0.07	4/28/2014 3:56:00 PM	KEB	EPA 6020A	
Mercury-ICPMS	0.316	mg/Kg	0.007	4/28/2014 3:56:00 PM	KEB	EPA 6020A	
Zinc	128	mg/Kg	0.702	4/28/2014 5:16:00 PM	KEB	EPA 6020A	
%moisture	31.1	Percent		4/18/2014	BJR	%moisture	

Preliminary Draft for Agency Review

Certifications held by Anatek Labs ID: EPA:ID00013; AZ:0701; CO:ID00013; FL(NELAP):E87893; ID:ID00013; MT:CERT0028; NM: ID00013; OR:ID200001-002; WA:C595
Certifications held by Anatek Labs WA: EPA:WA00169; ID:WA00169; WA:C585; MT:Cert0095; FL(NELAP): E871099

Anatek Labs, Inc.

1282 Alturas Drive • Moscow, ID 83843 • (208) 883-2839 • Fax (208) 882-9246 • email moscow@anateklabs.com
504 E Sprague Ste. D • Spokane WA 99202 • (509) 838-3999 • Fax (509) 838-4433 • email spokane@anateklabs.com

Client: GEO ENGINEERS
Address: 523 E 2ND
SPOKANE, WA 99202
Attn: SCOTT LATHEN

Batch #: 140417045
Project Name: CLARK FORK RIVER DELTA 15387-014-00

Analytical Results Report

Sample Number	140417045-003	**Sampling Date**	4/16/2014	**Date/Time Received**	4/17/2014 12:00 PM
Client Sample ID	HA-1(6.5-7.0)	**Sampling Time**	2:30 PM	**Extraction Date**	
Matrix	Soil	**Sample Location**			
Comments					

Parameter	Result	Units	PQL	Analysis Date	Analyst	Method	Qualifier
Cadmium	ND	mg/Kg	0.762	4/28/2014 5:24:00 PM	KEB	EPA 6020A	
Copper	23.1	mg/Kg	0.762	4/28/2014 5:24:00 PM	KEB	EPA 6020A	
Lead	12.2	mg/Kg	0.762	4/28/2014 5:24:00 PM	KEB	EPA 6020A	
Mercury-ICPMS	ND	mg/Kg	0.0762	4/28/2014 5:24:00 PM	KEB	EPA 6020A	
Zinc	54.3	mg/Kg	0.762	4/28/2014 5:24:00 PM	KEB	EPA 6020A	
%moisture	36.2	Percent		4/18/2014	BJR	%moisture	

Sample Number	140417045-004	**Sampling Date**	4/16/2014	**Date/Time Received**	4/17/2014 12:00 PM
Client Sample ID	HA-2(1.5-2.0)	**Sampling Time**	1:34 PM	**Extraction Date**	
Matrix	Soil	**Sample Location**			
Comments					

Parameter	Result	Units	PQL	Analysis Date	Analyst	Method	Qualifier
Cadmium	2.60	mg/Kg	0.679	4/28/2014 5:31:00 PM	KEB	EPA 6020A	
Copper	415	mg/Kg	0.679	4/28/2014 5:31:00 PM	KEB	EPA 6020A	
Lead	83.8	mg/Kg	0.679	4/28/2014 5:31:00 PM	KEB	EPA 6020A	
Mercury-ICPMS	0.374	mg/Kg	0.0679	4/28/2014 5:31:00 PM	KEB	EPA 6020A	
Zinc	620	mg/Kg	0.679	4/28/2014 5:31:00 PM	KEB	EPA 6020A	
%moisture	30.3	Percent		4/18/2014	BJR	%moisture	

Preliminary Draft for Agency Review

Certifications held by Anatek Labs ID: EPA:ID00013; AZ:0701; CO:ID00013; FL(NELAP):E87893; ID:ID00013; MT:CERT0028; NM: ID00013; OR:ID200001-002; WA:C595
Certifications held by Anatek Labs WA: EPA:WA00169; ID:WA00169; WA:C585; MT:Cert0095; FL(NELAP): E871099

Anatek Labs, Inc.

1282 Alturas Drive • Moscow, ID 83843 • (208) 883-2839 • Fax (208) 882-9246 • email moscow@anateklabs.com
504 E Sprague Ste. D • Spokane WA 99202 • (509) 838-3999 • Fax (509) 838-4433 • email spokane@anateklabs.com

Client: GEO ENGINEERS
Address: 523 E 2ND
SPOKANE, WA 99202
Attn: SCOTT LATHEN

Batch #: 140417045
Project Name: CLARK FORK RIVER DELTA 15387-014-00

Analytical Results Report

Sample Number 140417045-005
Client Sample ID HA-2(4.5-5.0)
Matrix Soil
Comments

Sampling Date 4/16/2014
Sampling Time 1:40 PM
Sample Location

Date/Time Received 4/17/2014 12:00 PM
Extraction Date

Parameter	Result	Units	PQL	Analysis Date	Analyst	Method	Qualifier
Cadmium	ND	mg/Kg	0.698	4/28/2014 5:39:00 PM	KEB	EPA 6020A	
Copper	19.7	mg/Kg	0.698	4/28/2014 5:39:00 PM	KEB	EPA 6020A	
Lead	8.97	mg/Kg	0.698	4/28/2014 5:39:00 PM	KEB	EPA 6020A	
Mercury-ICPMS	ND	mg/Kg	0.0698	4/28/2014 5:39:00 PM	KEB	EPA 6020A	
Zinc	36.1	mg/Kg	0.698	4/28/2014 5:39:00 PM	KEB	EPA 6020A	
%moisture	28.4	Percent		4/18/2014	BJR	%moisture	

Sample Number 140417045-006
Client Sample ID HA-2(6.5-7.0)
Matrix Soil
Comments

Sampling Date 4/16/2014
Sampling Time 1:45 PM
Sample Location

Date/Time Received 4/17/2014 12:00 PM
Extraction Date

Parameter	Result	Units	PQL	Analysis Date	Analyst	Method	Qualifier
Cadmium	ND	mg/Kg	0.626	4/28/2014 5:46:00 PM	KEB	EPA 6020A	
Copper	11.2	mg/Kg	0.626	4/28/2014 5:46:00 PM	KEB	EPA 6020A	
Lead	6.22	mg/Kg	0.626	4/28/2014 5:46:00 PM	KEB	EPA 6020A	
Mercury-ICPMS	ND	mg/Kg	0.0626	4/28/2014 5:46:00 PM	KEB	EPA 6020A	
Zinc	28.3	mg/Kg	0.626	4/28/2014 5:46:00 PM	KEB	EPA 6020A	
%moisture	22.1	Percent		4/18/2014	BJR	%moisture	

Preliminary Draft for Agency Review

Anatek Labs, Inc.

1282 Alturas Drive • Moscow, ID 83843 • (208) 883-2839 • Fax (208) 882-9246 • email moscow@anateklabs.com
504 E Sprague Ste. D • Spokane WA 99202 • (509) 838-3999 • Fax (509) 838-4433 • email spokane@anateklabs.com

Client: GEO ENGINEERS
Address: 523 E 2ND
SPOKANE, WA 99202
Attn: SCOTT LATHEN

Batch #: 140417045
Project Name: CLARK FORK RIVER DELTA 15387-014-00

Analytical Results Report

Sample Number	140417045-007	**Sampling Date**	4/16/2014	**Date/Time Received**	4/17/2014 12:00 PM
Client Sample ID	HA-2(9-9.5)	**Sampling Time**	1:50 PM	**Extraction Date**	
Matrix	Soil	**Sample Location**			
Comments					

Parameter	Result	Units	PQL	Analysis Date	Analyst	Method	Qualifier
Cadmium	ND	mg/Kg	0.633	4/28/2014 5:53:00 PM	KEB	EPA 6020A	
Copper	11.5	mg/Kg	0.633	4/28/2014 5:53:00 PM	KEB	EPA 6020A	
Lead	6.14	mg/Kg	0.633	4/28/2014 5:53:00 PM	KEB	EPA 6020A	
Mercury-ICPMS	ND	mg/Kg	0.0633	4/28/2014 5:53:00 PM	KEB	EPA 6020A	
Zinc	29.3	mg/Kg	0.633	4/28/2014 5:53:00 PM	KEB	EPA 6020A	
%moisture	22.7	Percent		4/18/2014	BJR	%moisture	

Sample Number	140417045-008	**Sampling Date**	4/16/2014	**Date/Time Received**	4/17/2014 12:00 PM
Client Sample ID	HA-3A(1.5-2)	**Sampling Time**	12:39 PM	**Extraction Date**	
Matrix	Soil	**Sample Location**			
Comments					

Parameter	Result	Units	PQL	Analysis Date	Analyst	Method	Qualifier
Cadmium	ND	mg/Kg	0.657	4/28/2014 5:02:00 PM	KEB	EPA 6020A	
Copper	10.5	mg/kg	0.657	4/28/2014 5:02:00 PM	KEB	EPA 6020A	
Lead	6.15	mg/Kg	0.657	4/28/2014 5:02:00 PM	KEB	EPA 6020A	
Mercury-ICPMS	ND	mg/Kg	0.0657	4/28/2014 5:02:00 PM	KEB	EPA 6020A	
Zinc	27.2	mg/Kg	0.657	4/28/2014 5:02:00 PM	KEB	EPA 6020A	
%moisture	24	Percent		4/18/2014	BJR	%moisture	

Preliminary Draft for Agency Review

Anatek Labs, Inc.

1282 Alturas Drive • Moscow, ID 83843 • (208) 883-2839 • Fax (208) 882-9246 • email moscow@anateklabs.com
504 E Sprague Ste. D • Spokane WA 99202 • (509) 838-3999 • Fax (509) 838-4433 • email spokane@anateklabs.com

Client: GEO ENGINEERS
Address: 523 E 2ND
SPOKANE, WA 99202
Attn: SCOTT LATHEN

Batch #: 140417045
Project Name: CLARK FORK RIVER DELTA 15387-014-00

Analytical Results Report

Sample Number 140417045-009 **Sampling Date** 4/16/2014 **Date/Time Received** 4/17/2014 12:00 PM
Client Sample ID HA-3A(4-4.5) **Sampling Time** 12:48 PM **Extraction Date**
Matrix Soil **Sample Location**
Comments

Parameter	Result	Units	PQL	Analysis Date	Analyst	Method	Qualifier
Cadmium	ND	mg/Kg	0.687	4/28/2014 6:01:00 PM	KEB	EPA 6020A	
Copper	5.27	mg/Kg	0.687	4/28/2014 6:01:00 PM	KEB	EPA 6020A	
Lead	3.47	mg/Kg	0.687	4/28/2014 6:01:00 PM	KEB	EPA 6020A	
Mercury-ICPMS	ND	mg/Kg	0.0687	4/28/2014 6:01:00 PM	KEB	EPA 6020A	
Zinc	18.7	mg/Kg	0.687	4/28/2014 6:01:00 PM	KEB	EPA 6020A	
%moisture	27.4	Percent		4/18/2014	BJR	%moisture	

Sample Number 140417045-010 **Sampling Date** 4/16/2014 **Date/Time Received** 4/17/2014 12:00 PM
Client Sample ID HA-4A(1.5-2) **Sampling Time** 9:47 AM **Extraction Date**
Matrix Soil **Sample Location**
Comments

Parameter	Result	Units	PQL	Analysis Date	Analyst	Method	Qualifier
Cadmium	ND	mg/Kg	0.662	4/28/2014 6:08:00 PM	KEB	EPA 6020A	
Copper	22.5	mg/Kg	0.662	4/28/2014 6:08:00 PM	KEB	EPA 6020A	
Lead	12.5	mg/Kg	0.662	4/28/2014 6:08:00 PM	KEB	EPA 6020A	
Mercury-ICPMS	ND	mg/Kg	0.0662	4/28/2014 6:08:00 PM	KEB	EPA 6020A	
Zinc	53.5	mg/Kg	0.662	4/28/2014 6:08:00 PM	KEB	EPA 6020A	
%moisture	25.4	Percent		4/18/2014	BJR	%moisture	

Preliminary Draft for Agency Review

Anatek Labs, Inc.

1282 Alturas Drive • Moscow, ID 83843 • (208) 883-2839 • Fax (208) 882-9246 • email moscow@anateklabs.com
504 E Sprague Ste. D • Spokane WA 99202 • (509) 838-3999 • Fax (509) 838-4433 • email spokane@anateklabs.com

Client: GEO ENGINEERS
Address: 523 E 2ND
SPOKANE, WA 99202
Attn: SCOTT LATHEN

Batch #: 140417045
Project Name: CLARK FORK RIVER DELTA 15387-014-00

Analytical Results Report

Sample Number	140417045-011	**Sampling Date**	4/16/2014	**Date/Time Received**	4/17/2014 12:00 PM
Client Sample ID	HA-4A(4-4.5)	**Sampling Time**	9:55 AM	**Extraction Date**	
Matrix	Soil	**Sample Location**			
Comments					

Parameter	Result	Units	PQL	Analysis Date	Analyst	Method	Qualifier
Cadmium	ND	mg/Kg	0.639	4/28/2014 6:38:00 PM	KEB	EPA 6020A	
Copper	12.0	mg/Kg	0.639	4/28/2014 6:38:00 PM	KEB	EPA 6020A	
Lead	6.43	mg/Kg	0.639	4/28/2014 6:38:00 PM	KEB	EPA 6020A	
Mercury-ICPMS	ND	mg/Kg	0.0639	4/28/2014 6:38:00 PM	KEB	EPA 6020A	
Zinc	29.6	mg/Kg	0.639	4/28/2014 6:38:00 PM	KEB	EPA 6020A	
%moisture	23.3	Percent		4/18/2014	BJR	%moisture	

Sample Number	140417045-012	**Sampling Date**	4/16/2014	**Date/Time Received**	4/17/2014 12:00 PM
Client Sample ID	HA-4A(6-6.5)	**Sampling Time**	10:08 AM	**Extraction Date**	
Matrix	Soil	**Sample Location**			
Comments					

Parameter	Result	Units	PQL	Analysis Date	Analyst	Method	Qualifier
Cadmium	ND	mg/Kg	0.714	4/28/2014 6:45:00 PM	KEB	EPA 6020A	
Copper	18.1	mg/Kg	0.714	4/28/2014 6:45:00 PM	KEB	EPA 6020A	
Lead	8.20	mg/Kg	0.714	4/28/2014 6:45:00 PM	KEB	EPA 6020A	
Mercury-ICPMS	ND	mg/Kg	0.0714	4/28/2014 6:45:00 PM	KEB	EPA 6020A	
Zinc	33.3	mg/Kg	0.714	4/28/2014 6:45:00 PM	KEB	EPA 6020A	
%moisture	29.3	Percent		4/18/2014	BJR	%moisture	

Preliminary Draft for Agency Review

Anatek Labs, Inc.

1282 Alturas Drive • Moscow, ID 83843 • (208) 883-2839 • Fax (208) 882-9246 • email moscow@anateklabs.com
504 E Sprague Ste. D • Spokane WA 99202 • (509) 838-3999 • Fax (509) 838-4433 • email spokane@anateklabs.com

Client: GEO ENGINEERS
Address: 523 E 2ND
SPOKANE, WA 99202
Attn: SCOTT LATHEN

Batch #: 140417045
Project Name: CLARK FORK RIVER DELTA 15387-014-00

Analytical Results Report

Sample Number	140417045-013	**Sampling Date**	4/16/2014	**Date/Time Received**	4/17/2014 12:00 PM
Client Sample ID	HA-5(1.5-2)	**Sampling Time**	1:57 PM	**Extraction Date**	
Matrix	Soil	**Sample Location**			
Comments					

Parameter	Result	Units	PQL	Analysis Date	Analyst	Method	Qualifier
Cadmium	2.23	mg/Kg	0.78	4/28/2014 6:52:00 PM	KEB	EPA 6020A	
Copper	100	mg/Kg	0.78	4/28/2014 6:52:00 PM	KEB	EPA 6020A	
Lead	78.5	mg/Kg	0.78	4/28/2014 6:52:00 PM	KEB	EPA 6020A	
Mercury-ICPMS	0.119	mg/Kg	0.078	4/28/2014 6:52:00 PM	KEB	EPA 6020A	
Zinc	648	mg/Kg	0.78	4/28/2014 6:52:00 PM	KEB	EPA 6020A	
%moisture	35.8	Percent		4/18/2014	BJR	%moisture	

Sample Number	140417045-014	**Sampling Date**	4/16/2014	**Date/Time Received**	4/17/2014 12:00 PM
Client Sample ID	HA-5A(3.5-4)	**Sampling Time**	2:04 PM	**Extraction Date**	
Matrix	Soil	**Sample Location**			
Comments					

Parameter	Result	Units	PQL	Analysis Date	Analyst	Method	Qualifier
Cadmium	1.64	mg/Kg	0.696	4/30/2014 11:11:00 PM	KEB	EPA 6020A	
Copper	78.9	mg/Kg	0.696	4/30/2014 11:11:00 PM	KEB	EPA 6020A	
Lead	84.7	mg/Kg	0.696	4/30/2014 11:11:00 PM	KEB	EPA 6020A	
Mercury-ICPMS	0.116	mg/Kg	0.0696	4/30/2014 11:11:00 PM	KEB	EPA 6020A	
Zinc	417	mg/Kg	0.696	4/30/2014 11:11:00 PM	KEB	EPA 6020A	
%moisture	27.7	Percent		4/18/2014	BJR	%moisture	

Preliminary Draft for Agency Review

Certifications held by Anatek Labs ID: EPA:ID00013; AZ:0701; CO:ID00013; FL(NELAP):E87893; ID:ID00013; MT:CERT0028; NM: ID00013; OR:ID200001-002; WA:C595
Certifications held by Anatek Labs WA: EPA:WA00169; ID:WA00169; WA:C585; MT:Cert0095; FL(NELAP): E871099

Anatek Labs, Inc.

1282 Alturas Drive • Moscow, ID 83843 • (208) 883-2839 • Fax (208) 882-9246 • email moscow@anateklabs.com
504 E Sprague Ste. D • Spokane WA 99202 • (509) 838-3999 • Fax (509) 838-4433 • email spokane@anateklabs.com

Client: GEO ENGINEERS
Address: 523 E 2ND
SPOKANE, WA 99202
Attn: SCOTT LATHEN

Batch #: 140417045
Project Name: CLARK FORK RIVER DELTA 15387-014-00

Analytical Results Report

Sample Number	140417045-015	**Sampling Date**	4/15/2014	**Date/Time Received**	4/17/2014 12:00 PM
Client Sample ID	HA-6(2-2.5)	**Sampling Time**		**Extraction Date**	
Matrix	Soil	**Sample Location**			
Comments					

Parameter	Result	Units	PQL	Analysis Date	Analyst	Method	Qualifier
Cadmium	ND	mg/Kg	0.771	4/28/2014 7:07:00 PM	KEB	EPA 6020A	
Copper	73.9	mg/Kg	0.771	4/28/2014 7:07:00 PM	KEB	EPA 6020A	
Lead	28.6	mg/Kg	0.771	4/28/2014 7:07:00 PM	KEB	EPA 6020A	
Mercury-ICPMS	0.111	mg/Kg	0.0771	4/28/2014 7:07:00 PM	KEB	EPA 6020A	
Zinc	130	mg/Kg	0.771	4/28/2014 7:07:00 PM	KEB	EPA 6020A	
%moisture	34.6	Percent		4/18/2014	BJR	%moisture	

Sample Number	140417045-016	**Sampling Date**	4/15/2014	**Date/Time Received**	4/17/2014 12:00 PM
Client Sample ID	HA-6(4-4.5)	**Sampling Time**		**Extraction Date**	
Matrix	Soil	**Sample Location**			
Comments					

Parameter	Result	Units	PQL	Analysis Date	Analyst	Method	Qualifier
Cadmium	0.751	mg/Kg	0.751	4/28/2014 7:15:00 PM	KEB	EPA 6020A	
Copper	76.8	mg/Kg	0.751	4/28/2014 7:15:00 PM	KEB	EPA 6020A	
Lead	26.6	mg/Kg	0.751	4/28/2014 7:15:00 PM	KEB	EPA 6020A	
Mercury-ICPMS	0.122	mg/Kg	0.0751	4/28/2014 7:15:00 PM	KEB	EPA 6020A	
Zinc	228	mg/Kg	0.751	4/28/2014 7:15:00 PM	KEB	EPA 6020A	
%moisture	34.6	Percent		4/18/2014	BJR	%moisture	

Preliminary Draft for Agency Review

Anatek Labs, Inc.

1282 Alturas Drive • Moscow, ID 83843 • (208) 883-2839 • Fax (208) 882-9246 • email moscow@anateklabs.com
504 E Sprague Ste. D • Spokane WA 99202 • (509) 838-3999 • Fax (509) 838-4433 • email spokane@anateklabs.com

Client: GEO ENGINEERS
Address: 523 E 2ND
SPOKANE, WA 99202
Attn: SCOTT LATHEN

Batch #: 140417045
Project Name: CLARK FORK RIVER DELTA 15387-014-00

Analytical Results Report

Sample Number	140417045-017	**Sampling Date**	4/15/2014	**Date/Time Received**	4/17/2014 12:00 PM
Client Sample ID	HA-6(6-6.5)	**Sampling Time**		**Extraction Date**	
Matrix	Soil	**Sample Location**			
Comments					

Parameter	Result	Units	PQL	Analysis Date	Analyst	Method	Qualifier
Cadmium	0.752	mg/Kg	0.702	4/28/2014 8:14:00 PM	KEB	EPA 6020A	
Copper	94.8	mg/Kg	0.702	4/28/2014 8:14:00 PM	KEB	EPA 6020A	
Lead	30.9	mg/Kg	0.702	4/28/2014 8:14:00 PM	KEB	EPA 6020A	
Mercury-ICPMS	0.116	mg/Kg	0.0702	4/28/2014 8:14:00 PM	KEB	EPA 6020A	
Zinc	299	mg/Kg	0.702	4/28/2014 8:14:00 PM	KEB	EPA 6020A	
%moisture	29.3	Percent		4/18/2014	BJR	%moisture	

Sample Number	140417045-018	**Sampling Date**	4/16/2014	**Date/Time Received**	4/17/2014 12:00 PM
Client Sample ID	HA-7(1.5-2)	**Sampling Time**	10:05 AM	**Extraction Date**	
Matrix	Soil	**Sample Location**			
Comments					

Parameter	Result	Units	PQL	Analysis Date	Analyst	Method	Qualifier
Cadmium	ND	mg/Kg	0.602	4/28/2014 8:21:00 PM	KEB	EPA 6020A	
Copper	11.4	mg/Kg	0.602	4/28/2014 8:21:00 PM	KEB	EPA 6020A	
Lead	6.82	mg/Kg	0.602	4/28/2014 8:21:00 PM	KEB	EPA 6020A	
Mercury-ICPMS	ND	mg/Kg	0.0602	4/28/2014 8:21:00 PM	KEB	EPA 6020A	
Zinc	29.0	mg/Kg	0.602	4/28/2014 8:21:00 PM	KEB	EPA 6020A	
%moisture	17.7	Percent		4/18/2014	BJR	%moisture	

Preliminary Draft for Agency Review

Certifications held by Anatek Labs ID: EPA:ID00013; AZ:0701; CO:ID00013; FL(NELAP):E87893; ID:ID00013; MT:CERT0028; NM: ID00013; OR:ID200001-002; WA:C595
Certifications held by Anatek Labs WA: EPA:WA00169; ID:WA00169; WA:C585; MT:Cert0095; FL(NELAP): E871099

Anatek Labs, Inc.

1282 Alturas Drive • Moscow, ID 83843 • (208) 883-2839 • Fax (208) 882-9246 • email moscow@anateklabs.com
504 E Sprague Ste. D • Spokane WA 99202 • (509) 838-3999 • Fax (509) 838-4433 • email spokane@anateklabs.com

Client: GEO ENGINEERS
Address: 523 E 2ND
SPOKANE, WA 99202
Attn: SCOTT LATHEN

Batch #: 140417045
Project Name: CLARK FORK RIVER DELTA 15387-014-00

Analytical Results Report

Sample Number	140417045-019	**Sampling Date**	4/16/2014	**Date/Time Received**	4/17/2014 12:00 PM
Client Sample ID	HA-7(4-4.5)	**Sampling Time**	10:10 AM	**Extraction Date**	
Matrix	Soil	**Sample Location**			
Comments					

Parameter	Result	Units	PQL	Analysis Date	Analyst	Method	Qualifier
Cadmium	ND	mg/Kg	0.64	4/28/2014 7:37:00 PM	KEB	EPA 6020A	
Copper	4.74	mg/Kg	0.64	4/28/2014 7:37:00 PM	KEB	EPA 6020A	
Lead	4.01	mg/Kg	0.64	4/28/2014 7:37:00 PM	KEB	EPA 6020A	
Mercury-ICPMS	ND	mg/Kg	0.064	4/28/2014 7:37:00 PM	KEB	EPA 6020A	
Zinc	16.4	mg/Kg	0.64	4/28/2014 7:37:00 PM	KEB	EPA 6020A	
%moisture	23.3	Percent		4/18/2014	BJR	%moisture	

Sample Number	140417045-020	**Sampling Date**	4/16/2014	**Date/Time Received**	4/17/2014 12:00 PM
Client Sample ID	HA-7(6-6.5)	**Sampling Time**	10:15 AM	**Extraction Date**	
Matrix	Soil	**Sample Location**			
Comments					

Parameter	Result	Units	PQL	Analysis Date	Analyst	Method	Qualifier
Cadmium	ND	mg/Kg	0.628	4/28/2014 7:44:00 PM	KEB	EPA 6020A	
Copper	5.01	mg/Kg	0.628	4/28/2014 7:44:00 PM	KEB	EPA 6020A	
Lead	3.33	mg/Kg	0.628	4/28/2014 7:44:00 PM	KEB	EPA 6020A	
Mercury-ICPMS	ND	mg/Kg	0.0628	4/28/2014 7:44:00 PM	KEB	EPA 6020A	
Zinc	18.9	mg/Kg	0.628	4/28/2014 7:44:00 PM	KEB	EPA 6020A	
%moisture	22.3	Percent		4/18/2014	BJR	%moisture	

Preliminary Draft for Agency Review

Anatek Labs, Inc.

1282 Alturas Drive • Moscow, ID 83843 • (208) 883-2839 • Fax (208) 882-9246 • email moscow@anateklabs.com
504 E Sprague Ste. D • Spokane WA 99202 • (509) 838-3999 • Fax (509) 838-4433 • email spokane@anateklabs.com

Client: GEO ENGINEERS
Address: 523 E 2ND
SPOKANE, WA 99202
Attn: SCOTT LATHEN

Batch #: 140417045
Project Name: CLARK FORK RIVER DELTA 15387-014-00

Analytical Results Report

Sample Number 140417045-021
Client Sample ID HA-8(1.5-2)
Matrix Soil
Comments

Sampling Date 4/16/2014
Sampling Time 11:52 AM
Sample Location

Date/Time Received 4/17/2014 12:00 PM
Extraction Date

Parameter	Result	Units	PQL	Analysis Date	Analyst	Method	Qualifier
Cadmium	ND	mg/Kg	0.703	4/30/2014 2:13:00 PM	KEB	EPA 6020A	
Copper	20.8	mg/Kg	0.703	4/30/2014 2:13:00 PM	KEB	EPA 6020A	
Lead	9.93	mg/Kg	0.703	4/30/2014 2:13:00 PM	KEB	EPA 6020A	
Mercury-ICPMS	ND	mg/Kg	0.0703	4/30/2014 2:13:00 PM	KEB	EPA 6020A	
Zinc	47.4	mg/Kg	0.703	4/30/2014 2:13:00 PM	KEB	EPA 6020A	
%moisture	30.1	Percent		4/18/2014	BJR	%moisture	

Sample Number 140417045-022
Client Sample ID HA-8(4-4.5)
Matrix Soil
Comments

Sampling Date 4/16/2014
Sampling Time 12:02 PM
Sample Location

Date/Time Received 4/17/2014 12:00 PM
Extraction Date

Parameter	Result	Units	PQL	Analysis Date	Analyst	Method	Qualifier
Cadmium	ND	mg/Kg	0.679	4/30/2014 2:38:00 PM	KEB	EPA 6020A	
Copper	18.6	mg/Kg	0.679	4/30/2014 2:38:00 PM	KEB	EPA 6020A	
Lead	10.6	mg/Kg	0.679	4/30/2014 2:38:00 PM	KEB	EPA 6020A	
Mercury-ICPMS	ND	mg/Kg	0.0679	4/30/2014 2:38:00 PM	KEB	EPA 6020A	
Zinc	39.0	mg/Kg	0.679	4/30/2014 2:38:00 PM	KEB	EPA 6020A	
%moisture	26.8	Percent		4/18/2014	BJR	%moisture	

Preliminary Draft for Agency Review

Anatek Labs, Inc.

1282 Alturas Drive • Moscow, ID 83843 • (208) 883-2839 • Fax (208) 882-9246 • email moscow@anateklabs.com
504 E Sprague Ste. D • Spokane WA 99202 • (509) 838-3999 • Fax (509) 838-4433 • email spokane@anateklabs.com

Client: GEO ENGINEERS
Address: 523 E 2ND
SPOKANE, WA 99202
Attn: SCOTT LATHEN

Batch #: 140417045
Project Name: CLARK FORK RIVER DELTA 15387-014-00

Analytical Results Report

Sample Number	140417045-023	**Sampling Date**	4/16/2014	**Date/Time Received**	4/17/2014 12:00 PM
Client Sample ID	HA-8(6-6.5)	**Sampling Time**	12:07 PM	**Extraction Date**	
Matrix	Soil	**Sample Location**			
Comments					

Parameter	Result	Units	PQL	Analysis Date	Analyst	Method	Qualifier
Cadmium	ND	mg/Kg	0.704	4/30/2014 3:17:00 PM	KEB	EPA 6020A	
Copper	12.8	mg/Kg	0.704	4/30/2014 3:17:00 PM	KEB	EPA 6020A	
Lead	6.97	mg/Kg	0.704	4/30/2014 3:17:00 PM	KEB	EPA 6020A	
Mercury-ICPMS	ND	mg/Kg	0.0704	4/30/2014 3:17:00 PM	KEB	EPA 6020A	
Zinc	28.9	mg/Kg	0.704	4/30/2014 3:17:00 PM	KEB	EPA 6020A	
%moisture	30.5	Percent		4/18/2014	BJR	%moisture	

Sample Number	140417045-024	**Sampling Date**	4/16/2014	**Date/Time Received**	4/17/2014 12:00 PM
Client Sample ID	HA-9(1.5-2)	**Sampling Time**	9:07 AM	**Extraction Date**	
Matrix	Soil	**Sample Location**			
Comments					

Parameter	Result	Units	PQL	Analysis Date	Analyst	Method	Qualifier
Cadmium	ND	mg/Kg	0.677	4/30/2014 3:24:00 PM	KEB	EPA 6020A	
Copper	23.9	mg/Kg	0.677	4/30/2014 3:24:00 PM	KEB	EPA 6020A	
Lead	14.7	mg/Kg	0.677	4/30/2014 3:24:00 PM	KEB	EPA 6020A	
Mercury-ICPMS	ND	mg/Kg	0.0677	4/30/2014 3:24:00 PM	KEB	EPA 6020A	
Zinc	50.5	mg/Kg	0.677	4/30/2014 3:24:00 PM	KEB	EPA 6020A	
%moisture	26.3	Percent		4/18/2014	BJR	%moisture	

Preliminary Draft for Agency Review

Anatek Labs, Inc.

1282 Alturas Drive • Moscow, ID 83843 • (208) 883-2839 • Fax (208) 882-9246 • email moscow@anateklabs.com
504 E Sprague Ste. D • Spokane WA 99202 • (509) 838-3999 • Fax (509) 838-4433 • email spokane@anateklabs.com

Client: GEO ENGINEERS
Address: 523 E 2ND
SPOKANE, WA 99202
Attn: SCOTT LATHEN

Batch #: 140417045
Project Name: CLARK FORK RIVER DELTA 15387-014-00

Analytical Results Report

Sample Number	140417045-025	**Sampling Date**	4/16/2014	**Date/Time Received**	4/17/2014 12:00 PM
Client Sample ID	HA-9(4-4.5)	**Sampling Time**	9:17 AM	**Extraction Date**	
Matrix	Soil	**Sample Location**			
Comments					

Parameter	Result	Units	PQL	Analysis Date	Analyst	Method	Qualifier
Cadmium	ND	mg/Kg	0.656	4/30/2014 3:39:00 PM	KEB	EPA 6020A	
Copper	7.35	mg/Kg	0.656	4/30/2014 3:39:00 PM	KEB	EPA 6020A	
Lead	4.36	mg/Kg	0.656	4/30/2014 3:39:00 PM	KEB	EPA 6020A	
Mercury-ICPMS	ND	mg/Kg	0.0656	4/30/2014 3:39:00 PM	KEB	EPA 6020A	
Zinc	22.3	mg/Kg	0.656	4/30/2014 3:39:00 PM	KEB	EPA 6020A	
%moisture	26.1	Percent		4/18/2014	BJR	%moisture	

Sample Number	140417045-026	**Sampling Date**	4/16/2014	**Date/Time Received**	4/17/2014 12:00 PM
Client Sample ID	HA-9(6-6.5)	**Sampling Time**	9:23 AM	**Extraction Date**	
Matrix	Soil	**Sample Location**			
Comments					

Parameter	Result	Units	PQL	Analysis Date	Analyst	Method	Qualifier
Cadmium	ND	mg/Kg	0.659	4/30/2014 3:46:00 PM	KEB	EPA 6020A	
Copper	5.69	mg/Kg	0.659	4/30/2014 3:46:00 PM	KEB	EPA 6020A	
Lead	4.77	mg/Kg	0.659	4/30/2014 3:46:00 PM	KEB	EPA 6020A	
Mercury-ICPMS	ND	mg/Kg	0.0659	4/30/2014 3:46:00 PM	KEB	EPA 6020A	
Zinc	20.6	mg/Kg	0.659	4/30/2014 3:46:00 PM	KEB	EPA 6020A	
%moisture	24.4	Percent		4/18/2014	BJR	%moisture	

Preliminary Draft for Agency Review

Anatek Labs, Inc.

1282 Alturas Drive • Moscow, ID 83843 • (208) 883-2839 • Fax (208) 882-9246 • email moscow@anateklabs.com
504 E Sprague Ste. D • Spokane WA 99202 • (509) 838-3999 • Fax (509) 838-4433 • email spokane@anateklabs.com

Client: GEO ENGINEERS
Address: 523 E 2ND
SPOKANE, WA 99202
Attn: SCOTT LATHEN

Batch #: 140417045
Project Name: CLARK FORK RIVER DELTA 15387-014-00

Analytical Results Report

Sample Number	140417045-027	**Sampling Date**	4/16/2014	**Date/Time Received**	4/17/2014 12:00 PM
Client Sample ID	HA-10(1.5-2)	**Sampling Time**	11:00 AM	**Extraction Date**	
Matrix	Soil	**Sample Location**			
Comments					

Parameter	Result	Units	PQL	Analysis Date	Analyst	Method	Qualifier
Cadmium	ND	mg/Kg	0.711	4/30/2014 3:54:00 PM	KEB	EPA 6020A	
Copper	18.9	mg/Kg	0.711	4/30/2014 3:54:00 PM	KEB	EPA 6020A	
Lead	11.0	mg/Kg	0.711	4/30/2014 3:54:00 PM	KEB	EPA 6020A	
Mercury-ICPMS	ND	mg/Kg	0.0711	4/30/2014 3:54:00 PM	KEB	EPA 6020A	
Zinc	49.2	mg/Kg	0.711	4/30/2014 3:54:00 PM	KEB	EPA 6020A	
%moisture	30.2	Percent		4/18/2014	BJR	%moisture	

Sample Number	140417045-028	**Sampling Date**	4/16/2014	**Date/Time Received**	4/17/2014 12:00 PM
Client Sample ID	HA-10(4-4.5)	**Sampling Time**	11:09 AM	**Extraction Date**	
Matrix	Soil	**Sample Location**			
Comments					

Parameter	Result	Units	PQL	Analysis Date	Analyst	Method	Qualifier
Cadmium	ND	mg/Kg	0.682	4/30/2014 4:01:00 PM	KEB	EPA 6020A	
Copper	16.9	mg/Kg	0.682	4/30/2014 4:01:00 PM	KEB	EPA 6020A	
Lead	9.32	mg/Kg	0.682	4/30/2014 4:01:00 PM	KEB	EPA 6020A	
Mercury-ICPMS	ND	mg/Kg	0.0682	4/30/2014 4:01:00 PM	KEB	EPA 6020A	
Zinc	35.6	mg/Kg	0.682	4/30/2014 4:01:00 PM	KEB	EPA 6020A	
%moisture	27.1	Percent		4/18/2014	BJR	%moisture	

Preliminary Draft for Agency Review

Anatek Labs, Inc.

1282 Alturas Drive • Moscow, ID 83843 • (208) 883-2839 • Fax (208) 882-9246 • email moscow@anateklabs.com
504 E Sprague Ste. D • Spokane WA 99202 • (509) 838-3999 • Fax (509) 838-4433 • email spokane@anateklabs.com

Client: GEO ENGINEERS
Address: 523 E 2ND
SPOKANE, WA 99202
Attn: SCOTT LATHEN

Batch #: 140417045
Project Name: CLARK FORK RIVER DELTA 15387-014-00

Analytical Results Report

Sample Number 140417045-029 | **Sampling Date** 4/16/2014 | **Date/Time Received** 4/17/2014 12:00 PM
Client Sample ID HA-10(6-6.5) | **Sampling Time** 11:15 AM | **Extraction Date**
Matrix Soil | **Sample Location**
Comments

Parameter	Result	Units	PQL	Analysis Date	Analyst	Method	Qualifier
Cadmium	ND	mg/Kg	0.628	4/30/2014 4:08:00 PM	KEB	EPA 6020A	
Copper	4.56	mg/Kg	0.628	4/30/2014 4:08:00 PM	KEB	EPA 6020A	
Lead	3.30	mg/Kg	0.628	4/30/2014 4:08:00 PM	KEB	EPA 6020A	
Mercury-ICPMS	ND	mg/Kg	0.0628	4/30/2014 4:08:00 PM	KEB	EPA 6020A	
Zinc	15.9	mg/Kg	0.628	4/30/2014 4:08:00 PM	KEB	EPA 6020A	
%moisture	21.9	Percent		4/18/2014	BJR	%moisture	

Sample Number 140417045-030 | **Sampling Date** 4/16/2014 | **Date/Time Received** 4/17/2014 12:00 PM
Client Sample ID HA-10(7.5-8) | **Sampling Time** 11:23 AM | **Extraction Date**
Matrix Soil | **Sample Location**
Comments

Parameter	Result	Units	PQL	Analysis Date	Analyst	Method	Qualifier
Cadmium	ND	mg/Kg	0.632	4/30/2014 4:16:00 PM	KEB	EPA 6020A	
Copper	5.37	mg/Kg	0.632	4/30/2014 4:16:00 PM	KEB	EPA 6020A	
Lead	3.39	mg/Kg	0.632	4/30/2014 4:16:00 PM	KEB	EPA 6020A	
Mercury-ICPMS	ND	mg/Kg	0.0632	4/30/2014 4:16:00 PM	KEB	EPA 6020A	
Zinc	19.2	mg/Kg	0.632	4/30/2014 4:16:00 PM	KEB	EPA 6020A	
%moisture	23	Percent		4/18/2014	BJR	%moisture	

Preliminary Draft for Agency Review

Anatek Labs, Inc.

1282 Alturas Drive • Moscow, ID 83843 • (208) 883-2839 • Fax (208) 882-9246 • email moscow@anateklabs.com
504 E Sprague Ste. D • Spokane WA 99202 • (509) 838-3999 • Fax (509) 838-4433 • email spokane@anateklabs.com

Client: GEO ENGINEERS
Address: 523 E 2ND
SPOKANE, WA 99202
Attn: SCOTT LATHEN

Batch #: 140417045
Project Name: CLARK FORK RIVER DELTA 15387-014-00

Analytical Results Report

Sample Number	140417045-031	**Sampling Date**	4/15/2014	**Date/Time Received**	4/17/2014 12:00 PM
Client Sample ID	HA-11(1.5-2)	**Sampling Time**	1:51 PM	**Extraction Date**	
Matrix	Soil	**Sample Location**			
Comments					

Parameter	Result	Units	PQL	Analysis Date	Analyst	Method	Qualifier
Cadmium	ND	mg/Kg	0.703	4/30/2014 5:06:00 PM	KEB	EPA 6020A	
Copper	22.9	mg/Kg	0.703	4/30/2014 5:06:00 PM	KEB	EPA 6020A	
Lead	11.9	mg/Kg	0.703	4/30/2014 5:06:00 PM	KEB	EPA 6020A	
Mercury-ICPMS	ND	mg/Kg	0.0703	4/30/2014 5:06:00 PM	KEB	EPA 6020A	
Zinc	57.3	mg/Kg	0.703	4/30/2014 5:06:00 PM	KEB	EPA 6020A	
%moisture	31.5	Percent		4/18/2014	BJR	%moisture	

Sample Number	140417045-032	**Sampling Date**	4/15/2014	**Date/Time Received**	4/17/2014 12:00 PM
Client Sample ID	HA-11(4-4.5)	**Sampling Time**	2:04 PM	**Extraction Date**	
Matrix	Soil	**Sample Location**			
Comments					

Parameter	Result	Units	PQL	Analysis Date	Analyst	Method	Qualifier
Cadmium	ND	mg/Kg	0.689	4/30/2014 5:14:00 PM	KEB	EPA 6020A	
Copper	24.0	mg/Kg	0.689	4/30/2014 5:14:00 PM	KEB	EPA 6020A	
Lead	14.0	mg/Kg	0.689	4/30/2014 5:14:00 PM	KEB	EPA 6020A	
Mercury-ICPMS	ND	mg/Kg	0.0689	4/30/2014 5:14:00 PM	KEB	EPA 6020A	
Zinc	63.0	mg/Kg	0.689	4/30/2014 5:14:00 PM	KEB	EPA 6020A	
%moisture	28.9	Percent		4/18/2014	BJR	%moisture	

Preliminary Draft for Agency Review

Anatek Labs, Inc.

1282 Alturas Drive • Moscow, ID 83843 • (208) 883-2839 • Fax (208) 882-9246 • email moscow@anateklabs.com
504 E Sprague Ste. D • Spokane WA 99202 • (509) 838-3999 • Fax (509) 838-4433 • email spokane@anateklabs.com

Client: GEO ENGINEERS
Address: 523 E 2ND
SPOKANE, WA 99202
Attn: SCOTT LATHEN

Batch #: 140417045
Project Name: CLARK FORK RIVER DELTA 15387-014-00

Analytical Results Report

Sample Number 140417045-033 **Sampling Date** 4/16/2014 **Date/Time Received** 4/17/2014 12:00 PM
Client Sample ID HA-11(4.5-5) **Sampling Time** 8:17 AM **Extraction Date**
Matrix Soil **Sample Location**
Comments

Parameter	Result	Units	PQL	Analysis Date	Analyst	Method	Qualifier
Cadmium	ND	mg/Kg	0.704	4/30/2014 5:21:00 PM	KEB	EPA 6020A	
Copper	14.9	mg/Kg	0.704	4/30/2014 5:21:00 PM	KEB	EPA 6020A	
Lead	7.87	mg/Kg	0.704	4/30/2014 5:21:00 PM	KEB	EPA 6020A	
Mercury-ICPMS	ND	mg/Kg	0.0704	4/30/2014 5:21:00 PM	KEB	EPA 6020A	
Zinc	37.5	mg/Kg	0.704	4/30/2014 5:21:00 PM	KEB	EPA 6020A	
%moisture	30.8	Percent		4/21/2014	BJR	%moisture	

Sample Number 140417045-034 **Sampling Date** 4/16/2014 **Date/Time Received** 4/17/2014 12:00 PM
Client Sample ID HA-12(1.5-2) **Sampling Time** 10:27 AM **Extraction Date**
Matrix Soil **Sample Location**
Comments

Parameter	Result	Units	PQL	Analysis Date	Analyst	Method	Qualifier
Cadmium	ND	mg/Kg	0.683	4/30/2014 5:28:00 PM	KEB	EPA 6020A	
Copper	22.8	mg/Kg	0.683	4/30/2014 5:28:00 PM	KEB	EPA 6020A	
Lead	13.6	mg/Kg	0.683	4/30/2014 5:28:00 PM	KEB	EPA 6020A	
Mercury-ICPMS	ND	mg/Kg	0.0683	4/30/2014 5:28:00 PM	KEB	EPA 6020A	
Zinc	49.6	mg/Kg	0.683	4/30/2014 5:28:00 PM	KEB	EPA 6020A	
%moisture	27.7	Percent		4/21/2014	BJR	%moisture	

Preliminary Draft for Agency Review

Anatek Labs, Inc.

1282 Alturas Drive • Moscow, ID 83843 • (208) 883-2839 • Fax (208) 882-9246 • email moscow@anateklabs.com
504 E Sprague Ste. D • Spokane WA 99202 • (509) 838-3999 • Fax (509) 838-4433 • email spokane@anateklabs.com

Client: GEO ENGINEERS
Address: 523 E 2ND
SPOKANE, WA 99202
Attn: SCOTT LATHEN

Batch #: 140417045
Project Name: CLARK FORK RIVER DELTA 15387-014-00

Analytical Results Report

Sample Number	140417045-035	**Sampling Date**	4/16/2014	**Date/Time Received**	4/17/2014 12:00 PM
Client Sample ID	HA-12(4-4.5)	**Sampling Time**	10:35 AM	**Extraction Date**	
Matrix	Soil	**Sample Location**			
Comments					

Parameter	Result	Units	PQL	Analysis Date	Analyst	Method	Qualifier
Cadmium	ND	mg/Kg	0.68	4/30/2014 5:36:00 PM	KEB	EPA 6020A	
Copper	23.5	mg/Kg	0.68	4/30/2014 5:36:00 PM	KEB	EPA 6020A	
Lead	12.6	mg/Kg	0.68	4/30/2014 5:36:00 PM	KEB	EPA 6020A	
Mercury-ICPMS	ND	mg/Kg	0.068	4/30/2014 5:36:00 PM	KEB	EPA 6020A	
Zinc	47.4	mg/Kg	0.68	4/30/2014 5:36:00 PM	KEB	EPA 6020A	
%moisture	27.6	Percent		4/21/2014	BJR	%moisture	

Sample Number	140417045-036	**Sampling Date**	4/16/2014	**Date/Time Received**	4/17/2014 12:00 PM
Client Sample ID	HA-12(5.5-6)	**Sampling Time**	10:38 AM	**Extraction Date**	
Matrix	Soil	**Sample Location**			
Comments					

Parameter	Result	Units	PQL	Analysis Date	Analyst	Method	Qualifier
Cadmium	ND	mg/Kg	0.697	4/30/2014 5:43:00 PM	KEB	EPA 6020A	
Copper	16.8	mg/Kg	0.697	4/30/2014 5:43:00 PM	KEB	EPA 6020A	
Lead	9.74	mg/Kg	0.697	4/30/2014 5:43:00 PM	KEB	EPA 6020A	
Mercury-ICPMS	ND	mg/Kg	0.0697	4/30/2014 5:43:00 PM	KEB	EPA 6020A	
Zinc	43.8	mg/Kg	0.697	4/30/2014 5:43:00 PM	KEB	EPA 6020A	
%moisture	29.1	Percent		4/21/2014	BJR	%moisture	

Preliminary Draft for Agency Review

Anatek Labs, Inc.

1282 Alturas Drive • Moscow, ID 83843 • (208) 883-2839 • Fax (208) 882-9246 • email moscow@anateklabs.com
504 E Sprague Ste. D • Spokane WA 99202 • (509) 838-3999 • Fax (509) 838-4433 • email spokane@anateklabs.com

Client: GEO ENGINEERS
Address: 523 E 2ND
SPOKANE, WA 99202
Attn: SCOTT LATHEN

Batch #: 140417045
Project Name: CLARK FORK RIVER DELTA 15387-014-00

Analytical Results Report

Sample Number	140417045-037	**Sampling Date**	4/15/2014	**Date/Time Received**	4/17/2014 12:00 PM
Client Sample ID	HA-13(1.5-2)	**Sampling Time**	2:54 PM	**Extraction Date**	
Matrix	Soil	**Sample Location**			
Comments					

Parameter	Result	Units	PQL	Analysis Date	Analyst	Method	Qualifier
Cadmium	ND	mg/Kg	0.674	4/30/2014 5:50:00 PM	KEB	EPA 6020A	
Copper	26.3	mg/Kg	0.674	4/30/2014 5:50:00 PM	KEB	EPA 6020A	
Lead	13.6	mg/Kg	0.674	4/30/2014 5:50:00 PM	KEB	EPA 6020A	
Mercury-ICPMS	ND	mg/Kg	0.0674	4/30/2014 5:50:00 PM	KEB	EPA 6020A	
Zinc	52.3	mg/Kg	0.674	4/30/2014 5:50:00 PM	KEB	EPA 6020A	
%moisture	25.8	Percent		4/21/2014	BJR	%moisture	

Sample Number	140417045-038	**Sampling Date**	4/15/2014	**Date/Time Received**	4/17/2014 12:00 PM
Client Sample ID	HA-13(4.5-5)	**Sampling Time**	3:06 PM	**Extraction Date**	
Matrix	Soil	**Sample Location**			
Comments					

Parameter	Result	Units	PQL	Analysis Date	Analyst	Method	Qualifier
Cadmium	ND	mg/Kg	0.658	4/30/2014 5:58:00 PM	KEB	EPA 6020A	
Copper	20.7	mg/Kg	0.658	4/30/2014 5:58:00 PM	KEB	EPA 6020A	
Lead	11.6	mg/Kg	0.658	4/30/2014 5:58:00 PM	KEB	EPA 6020A	
Mercury-ICPMS	ND	mg/Kg	0.0658	4/30/2014 5:58:00 PM	KEB	EPA 6020A	
Zinc	40.3	mg/Kg	0.658	4/30/2014 5:58:00 PM	KEB	EPA 6020A	
%moisture	25.8	Percent		4/21/2014	BJR	%moisture	

Preliminary Draft for Agency Review

Anatek Labs, Inc.

1282 Alturas Drive • Moscow, ID 83843 • (208) 883-2839 • Fax (208) 882-9246 • email moscow@anateklabs.com
504 E Sprague Ste. D • Spokane WA 99202 • (509) 838-3999 • Fax (509) 838-4433 • email spokane@anateklabs.com

Client: GEO ENGINEERS
Address: 523 E 2ND
SPOKANE, WA 99202
Attn: SCOTT LATHEN

Batch #: 140417045
Project Name: CLARK FORK RIVER DELTA 15387-014-00

Analytical Results Report

Sample Number 140417045-039 **Sampling Date** 4/15/2014 **Date/Time Received** 4/17/2014 12:00 PM
Client Sample ID HA-14(1.5-2) **Sampling Time** 1:12 PM **Extraction Date**
Matrix Soil **Sample Location**
Comments

Parameter	Result	Units	PQL	Analysis Date	Analyst	Method	Qualifier
Cadmium	1.46	mg/Kg	0.813	4/30/2014 6:05:00 PM	KEB	EPA 6020A	
Copper	176	mg/Kg	0.813	4/30/2014 6:05:00 PM	KEB	EPA 6020A	
Lead	43.2	mg/Kg	0.813	4/30/2014 6:05:00 PM	KEB	EPA 6020A	
Mercury-ICPMS	0.193	mg/Kg	0.0813	4/30/2014 6:05:00 PM	KEB	EPA 6020A	
Zinc	368	mg/Kg	0.813	4/30/2014 6:05:00 PM	KEB	EPA 6020A	
%moisture	39.1	Percent		4/21/2014	BJR	%moisture	

Sample Number 140417045-040 **Sampling Date** 4/15/2014 **Date/Time Received** 4/17/2014 12:00 PM
Client Sample ID HA-14(4-4.5) **Sampling Time** 1:20 PM **Extraction Date**
Matrix Soil **Sample Location**
Comments

Parameter	Result	Units	PQL	Analysis Date	Analyst	Method	Qualifier
Cadmium	ND	mg/Kg	0.693	4/30/2014 8:00:00 PM	KEB	EPA 6020A	
Copper	27.7	mg/Kg	0.693	4/30/2014 8:00:00 PM	KEB	EPA 6020A	
Lead	13.9	mg/Kg	0.693	4/30/2014 8:00:00 PM	KEB	EPA 6020A	
Mercury-ICPMS	ND	mg/Kg	0.0693	4/30/2014 8:00:00 PM	KEB	EPA 6020A	
Zinc	60.7	mg/Kg	0.693	4/30/2014 8:00:00 PM	KEB	EPA 6020A	
%moisture	28.8	Percent		4/21/2014	BJR	%moisture	

Preliminary Draft for Agency Review

Anatek Labs, Inc.

1282 Alturas Drive • Moscow, ID 83843 • (208) 883-2839 • Fax (208) 882-9246 • email moscow@anateklabs.com
504 E Sprague Ste. D • Spokane WA 99202 • (509) 838-3999 • Fax (509) 838-4433 • email spokane@anateklabs.com

Client: GEO ENGINEERS
Address: 523 E 2ND
SPOKANE, WA 99202
Attn: SCOTT LATHEN

Batch #: 140417045
Project Name: CLARK FORK RIVER DELTA 15387-014-00

Analytical Results Report

Sample Number 140417045-041
Client Sample ID HA-14(6-6.5)
Matrix Soil
Comments

Sampling Date 4/16/2014
Sampling Time 8:48 AM
Sample Location

Date/Time Received 4/17/2014 12:00 PM
Extraction Date

Parameter	Result	Units	PQL	Analysis Date	Analyst	Method	Qualifier
Cadmium	ND	mg/Kg	0.673	4/30/2014 7:28:00 PM	KEB	EPA 6020A	
Copper	22.4	mg/Kg	0.673	4/30/2014 7:28:00 PM	KEB	EPA 6020A	
Lead	12.1	mg/Kg	0.673	4/30/2014 7:28:00 PM	KEB	EPA 6020A	
Mercury-ICPMS	ND	mg/Kg	0.0673	4/30/2014 7:28:00 PM	KEB	EPA 6020A	
Zinc	51.9	mg/Kg	0.673	4/30/2014 7:28:00 PM	KEB	EPA 6020A	
%moisture	30.3	Percent		4/22/2014	BJR	%moisture	

Sample Number 140417045-042
Client Sample ID HA-15(1.5-2)
Matrix Soil
Comments

Sampling Date 4/15/2014
Sampling Time 11:27 AM
Sample Location

Date/Time Received 4/17/2014 12:00 PM
Extraction Date

Parameter	Result	Units	PQL	Analysis Date	Analyst	Method	Qualifier
Cadmium	1.01	mg/Kg	0.7	4/30/2014 8:07:00 PM	KEB	EPA 6020A	
Copper	192	mg/Kg	0.7	4/30/2014 8:07:00 PM	KEB	EPA 6020A	
Lead	54.3	mg/Kg	0.7	4/30/2014 8:07:00 PM	KEB	EPA 6020A	
Mercury-ICPMS	0.425	mg/Kg	0.07	4/30/2014 8:07:00 PM	KEB	EPA 6020A	
Zinc	171	mg/Kg	0.7	4/30/2014 8:07:00 PM	KEB	EPA 6020A	
%moisture	30.2	Percent		4/22/2014	BJR	%moisture	

Preliminary Draft for Agency Review

Anatek Labs, Inc.

1282 Alturas Drive • Moscow, ID 83843 • (208) 883-2839 • Fax (208) 882-9246 • email moscow@anateklabs.com
504 E Sprague Ste. D • Spokane WA 99202 • (509) 838-3999 • Fax (509) 838-4433 • email spokane@anateklabs.com

Client: GEO ENGINEERS
Address: 523 E 2ND
SPOKANE, WA 99202
Attn: SCOTT LATHEN

Batch #: 140417045
Project Name: CLARK FORK RIVER DELTA 15387-014-00

Analytical Results Report

Sample Number	140417045-043	**Sampling Date**	4/15/2014	**Date/Time Received**	4/17/2014 12:00 PM
Client Sample ID	HA-15(4-4.5)	**Sampling Time**	11:43 AM	**Extraction Date**	
Matrix	Soil	**Sample Location**			
Comments					

Parameter	Result	Units	PQL	Analysis Date	Analyst	Method	Qualifier
Cadmium	ND	mg/Kg	0.741	4/30/2014 8:14:00 PM	KEB	EPA 6020A	
Copper	25.4	mg/Kg	0.741	4/30/2014 8:14:00 PM	KEB	EPA 6020A	
Lead	12.6	mg/Kg	0.741	4/30/2014 8:14:00 PM	KEB	EPA 6020A	
Mercury-ICPMS	ND	mg/Kg	0.0741	4/30/2014 8:14:00 PM	KEB	EPA 6020A	
Zinc	57.4	mg/Kg	0.741	4/30/2014 8:14:00 PM	KEB	EPA 6020A	
%moisture	34.5	Percent		4/22/2014	BJR	%moisture	

Sample Number	140417045-044	**Sampling Date**	4/15/2014	**Date/Time Received**	4/17/2014 12:00 PM
Client Sample ID	HA-15(6-6.5)	**Sampling Time**	11:51 AM	**Extraction Date**	
Matrix	Soil	**Sample Location**			
Comments					

Parameter	Result	Units	PQL	Analysis Date	Analyst	Method	Qualifier
Cadmium	ND	mg/Kg	0.629	4/30/2014 8:22:00 PM	KEB	EPA 6020A	
Copper	9.01	mg/Kg	0.629	4/30/2014 8:22:00 PM	KEB	EPA 6020A	
Lead	4.87	mg/Kg	0.629	4/30/2014 8:22:00 PM	KEB	EPA 6020A	
Mercury-ICPMS	ND	mg/Kg	0.0629	4/30/2014 8:22:00 PM	KEB	EPA 6020A	
Zinc	22.6	mg/Kg	0.629	4/30/2014 8:22:00 PM	KEB	EPA 6020A	
%moisture	22.7	Percent		4/22/2014	BJR	%moisture	

Preliminary Draft for Agency Review

Anatek Labs, Inc.

1282 Alturas Drive • Moscow, ID 83843 • (208) 883-2839 • Fax (208) 882-9246 • email moscow@anateklabs.com
504 E Sprague Ste. D • Spokane WA 99202 • (509) 838-3999 • Fax (509) 838-4433 • email spokane@anateklabs.com

Client: GEO ENGINEERS
Address: 523 E 2ND
SPOKANE, WA 99202
Attn: SCOTT LATHEN

Batch #: 140417045
Project Name: CLARK FORK RIVER DELTA 15387-014-00

Analytical Results Report

Sample Number	140417045-045	**Sampling Date**	4/15/2014	**Date/Time Received**	4/17/2014 12:00 PM
Client Sample ID	HA-16(2-2.5)	**Sampling Time**	10:50 AM	**Extraction Date**	
Matrix	Soil	**Sample Location**			
Comments					

Parameter	Result	Units	PQL	Analysis Date	Analyst	Method	Qualifier
Cadmium	ND	mg/Kg	0.654	4/30/2014 8:51:00 PM	KEB	EPA 6020A	
Copper	15.0	mg/Kg	0.654	4/30/2014 8:51:00 PM	KEB	EPA 6020A	
Lead	12.0	mg/Kg	0.654	4/30/2014 8:51:00 PM	KEB	EPA 6020A	
Mercury-ICPMS	ND	mg/Kg	0.0654	4/30/2014 8:51:00 PM	KEB	EPA 6020A	
Zinc	42.7	mg/Kg	0.654	4/30/2014 8:51:00 PM	KEB	EPA 6020A	
%moisture	24.1	Percent		4/22/2014	BJR	%moisture	

Sample Number	140417045-046	**Sampling Date**	4/15/2014	**Date/Time Received**	4/17/2014 12:00 PM
Client Sample ID	HA-16(4-4.5)	**Sampling Time**	10:55 AM	**Extraction Date**	
Matrix	Soil	**Sample Location**			
Comments					

Parameter	Result	Units	PQL	Analysis Date	Analyst	Method	Qualifier
Cadmium	ND	mg/Kg	0.716	4/30/2014 9:06:00 PM	KEB	EPA 6020A	
Copper	42.0	mg/Kg	0.716	4/30/2014 9:06:00 PM	KEB	EPA 6020A	
Lead	9.39	mg/Kg	0.716	4/30/2014 9:06:00 PM	KEB	EPA 6020A	
Mercury-ICPMS	ND	mg/Kg	0.0716	4/30/2014 9:06:00 PM	KEB	EPA 6020A	
Zinc	39.6	mg/Kg	0.716	4/30/2014 9:06:00 PM	KEB	EPA 6020A	
%moisture	31	Percent		4/22/2014	BJR	%moisture	

Preliminary Draft for Agency Review

Certifications held by Anatek Labs ID: EPA:ID00013; AZ:0701; CO:ID00013; FL(NELAP):E87893; ID:ID00013; MT:CERT0028; NM: ID00013; OR:ID200001-002; WA:C595
Certifications held by Anatek Labs WA: EPA:WA00169; ID:WA00169; WA:C585; MT:Cert0095; FL(NELAP): E871099

Anatek Labs, Inc.

1282 Alturas Drive • Moscow, ID 83843 • (208) 883-2839 • Fax (208) 882-9246 • email moscow@anateklabs.com
504 E Sprague Ste. D • Spokane WA 99202 • (509) 838-3999 • Fax (509) 838-4433 • email spokane@anateklabs.com

Client: GEO ENGINEERS
Address: 523 E 2ND
SPOKANE, WA 99202
Attn: SCOTT LATHEN

Batch #: 140417045
Project Name: CLARK FORK RIVER DELTA 15387-014-00

Analytical Results Report

Sample Number	140417045-047	**Sampling Date**	4/15/2014	**Date/Time Received**	4/17/2014 12:00 PM
Client Sample ID	HA-16(6.5-7)	**Sampling Time**	11:00 AM	**Extraction Date**	
Matrix	Soil	**Sample Location**			
Comments					

Parameter	Result	Units	PQL	Analysis Date	Analyst	Method	Qualifier
Cadmium	ND	mg/Kg	0.661	4/30/2014 9:13:00 PM	KEB	EPA 6020A	
Copper	20.9	mg/Kg	0.661	4/30/2014 9:13:00 PM	KEB	EPA 6020A	
Lead	11.4	mg/Kg	0.661	4/30/2014 9:13:00 PM	KEB	EPA 6020A	
Mercury-ICPMS	ND	mg/Kg	0.0661	4/30/2014 9:13:00 PM	KEB	EPA 6020A	
Zinc	37.6	mg/Kg	0.661	4/30/2014 9:13:00 PM	KEB	EPA 6020A	
%moisture	25.3	Percent		4/22/2014	BJR	%moisture	

Sample Number	140417045-048	**Sampling Date**	4/15/2014	**Date/Time Received**	4/17/2014 12:00 PM
Client Sample ID	HA-17(1.5-2)	**Sampling Time**	12:31 PM	**Extraction Date**	
Matrix	Soil	**Sample Location**			
Comments					

Parameter	Result	Units	PQL	Analysis Date	Analyst	Method	Qualifier
Cadmium	ND	mg/Kg	0.689	4/30/2014 9:21:00 PM	KEB	EPA 6020A	
Copper	24.5	mg/Kg	0.689	4/30/2014 9:21:00 PM	KEB	EPA 6020A	
Lead	20.2	mg/Kg	0.689	4/30/2014 9:21:00 PM	KEB	EPA 6020A	
Mercury-ICPMS	0.301	mg/Kg	0.0689	4/30/2014 9:21:00 PM	KEB	EPA 6020A	
Zinc	57.9	mg/Kg	0.689	4/30/2014 9:21:00 PM	KEB	EPA 6020A	
%moisture	29	Percent		4/22/2014	BJR	%moisture	

Preliminary Draft for Agency Review

Anatek Labs, Inc.

1282 Alturas Drive • Moscow, ID 83843 • (208) 883-2839 • Fax (208) 882-9246 • email moscow@anateklabs.com
504 E Sprague Ste. D • Spokane WA 99202 • (509) 838-3999 • Fax (509) 838-4433 • email spokane@anateklabs.com

Client: GEO ENGINEERS
Address: 523 E 2ND
SPOKANE, WA 99202
Attn: SCOTT LATHEN

Batch #: 140417045
Project Name: CLARK FORK RIVER DELTA 15387-014-00

Analytical Results Report

Sample Number 140417045-049 **Sampling Date** 4/15/2014 **Date/Time Received** 4/17/2014 12:00 PM
Client Sample ID HA-17(4-4.5) **Sampling Time** 12:37 PM **Extraction Date**
Matrix Soil **Sample Location**
Comments

Parameter	Result	Units	PQL	Analysis Date	Analyst	Method	Qualifier
Cadmium	ND	mg/Kg	0.664	4/30/2014 9:28:00 PM	KEB	EPA 6020A	
Copper	21.0	mg/Kg	0.664	4/30/2014 9:28:00 PM	KEB	EPA 6020A	
Lead	12.5	mg/Kg	0.664	4/30/2014 9:28:00 PM	KEB	EPA 6020A	
Mercury-ICPMS	ND	mg/Kg	0.0664	4/30/2014 9:28:00 PM	KEB	EPA 6020A	
Zinc	44.6	mg/Kg	0.664	4/30/2014 9:28:00 PM	KEB	EPA 6020A	
%moisture	25.6	Percent		4/22/2014	BJR	%moisture	

Sample Number 140417045-050 **Sampling Date** 4/15/2014 **Date/Time Received** 4/17/2014 12:00 PM
Client Sample ID HA-17(6-6.5) **Sampling Time** 12:47 PM **Extraction Date**
Matrix Soil **Sample Location**
Comments

Parameter	Result	Units	PQL	Analysis Date	Analyst	Method	Qualifier
Cadmium	ND	mg/Kg	0.688	4/30/2014 9:35:00 PM	KEB	EPA 6020A	
Copper	16.8	mg/Kg	0.688	4/30/2014 9:35:00 PM	KEB	EPA 6020A	
Lead	12.2	mg/Kg	0.688	4/30/2014 9:35:00 PM	KEB	EPA 6020A	
Mercury-ICPMS	ND	mg/Kg	0.0688	4/30/2014 9:35:00 PM	KEB	EPA 6020A	
Zinc	41.1	mg/Kg	0.688	4/30/2014 9:35:00 PM	KEB	EPA 6020A	
%moisture	28.3	Percent		4/22/2014	BJR	%moisture	

Preliminary Draft for Agency Review

Anatek Labs, Inc.

1282 Alturas Drive • Moscow, ID 83843 • (208) 883-2839 • Fax (208) 882-9246 • email moscow@anateklabs.com
504 E Sprague Ste. D • Spokane WA 99202 • (509) 838-3999 • Fax (509) 838-4433 • email spokane@anateklabs.com

Client: GEO ENGINEERS
Address: 523 E 2ND
SPOKANE, WA 99202
Attn: SCOTT LATHEN

Batch #: 140417045
Project Name: CLARK FORK RIVER DELTA 15387-014-00

Analytical Results Report

Sample Number	140417045-051	**Sampling Date**	4/15/2014	**Date/Time Received**	4/17/2014 12:00 PM
Client Sample ID	HA-18(1.5-2)	**Sampling Time**	10:24 AM	**Extraction Date**	
Matrix	Soil	**Sample Location**			
Comments					

Parameter	Result	Units	PQL	Analysis Date	Analyst	Method	Qualifier
Cadmium	ND	mg/Kg	0.731	4/30/2014 9:43:00 PM	KEB	EPA 6020A	
Copper	19.7	mg/Kg	0.731	4/30/2014 9:43:00 PM	KEB	EPA 6020A	
Lead	12.3	mg/Kg	0.731	4/30/2014 9:43:00 PM	KEB	EPA 6020A	
Mercury-ICPMS	ND	mg/Kg	0.0731	4/30/2014 9:43:00 PM	KEB	EPA 6020A	
Zinc	48.2	mg/Kg	0.731	4/30/2014 9:43:00 PM	KEB	EPA 6020A	
%moisture	31.9	Percent		4/22/2014	BJR	%moisture	

Sample Number	140417045-052	**Sampling Date**	4/15/2014	**Date/Time Received**	4/17/2014 12:00 PM
Client Sample ID	HA-18(4-4.5)	**Sampling Time**	10:33 AM	**Extraction Date**	
Matrix	Soil	**Sample Location**			
Comments					

Parameter	Result	Units	PQL	Analysis Date	Analyst	Method	Qualifier
Cadmium	ND	mg/Kg	0.676	5/1/2014 5:43:00 PM	KEB	EPA 6020A	
Copper	25.6	mg/Kg	0.676	5/1/2014 5:43:00 PM	KEB	EPA 6020A	
Lead	14.8	mg/Kg	0.676	5/1/2014 5:43:00 PM	KEB	EPA 6020A	
Mercury-ICPMS	ND	mg/Kg	0.0676	5/1/2014 5:43:00 PM	KEB	EPA 6020A	
Zinc	46.8	mg/Kg	0.676	5/1/2014 5:43:00 PM	KEB	EPA 6020A	
%moisture	27.2	Percent		4/22/2014	BJR	%moisture	

Preliminary Draft for Agency Review

Certifications held by Anatek Labs ID: EPA:ID00013; AZ:0701; CO:ID00013; FL(NELAP):E87893; ID:ID00013; MT:CERT0028; NM: ID00013; OR:ID200001-002; WA:C595
Certifications held by Anatek Labs WA: EPA:WA00169; ID:WA00169; WA:C585; MT:Cert0095; FL(NELAP): E871099

Anatek Labs, Inc.

1282 Alturas Drive • Moscow, ID 83843 • (208) 883-2839 • Fax (208) 882-9246 • email moscow@anateklabs.com
504 E Sprague Ste. D • Spokane WA 99202 • (509) 838-3999 • Fax (509) 838-4433 • email spokane@anateklabs.com

Client: GEO ENGINEERS
Address: 523 E 2ND
SPOKANE, WA 99202
Attn: SCOTT LATHEN

Batch #: 140417045
Project Name: CLARK FORK RIVER DELTA 15387-014-00

Analytical Results Report

Sample Number 140417045-053 **Sampling Date** 4/15/2014 **Date/Time Received** 4/17/2014 12:00 PM
Client Sample ID HA-18(6-6.5) **Sampling Time** 10:40 AM **Extraction Date**
Matrix Soil **Sample Location**
Comments

Parameter	Result	Units	PQL	Analysis Date	Analyst	Method	Qualifier
Cadmium	ND	mg/Kg	0.64	4/30/2014 9:50:00 PM	KEB	EPA 6020A	
Copper	17.0	mg/Kg	0.64	4/30/2014 9:50:00 PM	KEB	EPA 6020A	
Lead	9.27	mg/Kg	0.64	4/30/2014 9:50:00 PM	KEB	EPA 6020A	
Mercury-ICPMS	ND	mg/Kg	0.064	4/30/2014 9:50:00 PM	KEB	EPA 6020A	
Zinc	35.2	mg/Kg	0.64	4/30/2014 9:50:00 PM	KEB	EPA 6020A	
%moisture	23.5	Percent		4/22/2014	BJR	%moisture	

Sample Number 140417045-054 **Sampling Date** 4/15/2014 **Date/Time Received** 4/17/2014 12:00 PM
Client Sample ID HA-19(1.5-2) **Sampling Time** 10:58 AM **Extraction Date**
Matrix Soil **Sample Location**
Comments

Parameter	Result	Units	PQL	Analysis Date	Analyst	Method	Qualifier
Cadmium	ND	mg/Kg	0.722	4/30/2014 9:58:00 PM	KEB	EPA 6020A	
Copper	25.7	mg/Kg	0.722	4/30/2014 9:58:00 PM	KEB	EPA 6020A	
Lead	14.1	mg/Kg	0.722	4/30/2014 9:58:00 PM	KEB	EPA 6020A	
Mercury-ICPMS	0.0856	mg/Kg	0.0722	4/30/2014 9:58:00 PM	KEB	EPA 6020A	
Zinc	62.4	mg/Kg	0.722	4/30/2014 9:58:00 PM	KEB	EPA 6020A	
%moisture	33	Percent		4/22/2014	BJR	%moisture	

Preliminary Draft for Agency Review

Certifications held by Anatek Labs ID: EPA:ID00013; AZ:0701; CO:ID00013; FL(NELAP):E87893; ID:ID00013; MT:CERT0028; NM: ID00013; OR:ID200001-002; WA:C595
Certifications held by Anatek Labs WA: EPA:WA00169; ID:WA00169; WA:C585; MT:Cert0095; FL(NELAP): E871099

Anatek Labs, Inc.

1282 Alturas Drive • Moscow, ID 83843 • (208) 883-2839 • Fax (208) 882-9246 • email moscow@anateklabs.com
504 E Sprague Ste. D • Spokane WA 99202 • (509) 838-3999 • Fax (509) 838-4433 • email spokane@anateklabs.com

Client: GEO ENGINEERS
Address: 523 E 2ND
SPOKANE, WA 99202
Attn: SCOTT LATHEN

Batch #: 140417045
Project Name: CLARK FORK RIVER DELTA 15387-014-00

Analytical Results Report

Sample Number	140417045-055	**Sampling Date**	4/15/2014	**Date/Time Received**	4/17/2014 12:00 PM
Client Sample ID	HA-19(4-4.5)	**Sampling Time**	11:06 AM	**Extraction Date**	
Matrix	Soil	**Sample Location**			
Comments					

Parameter	Result	Units	PQL	Analysis Date	Analyst	Method	Qualifier
Cadmium	ND	mg/Kg	0.679	4/30/2014 10:27:00 PM	KEB	EPA 6020A	
Copper	16.8	mg/Kg	0.679	4/30/2014 10:27:00 PM	KEB	EPA 6020A	
Lead	10.1	mg/Kg	0.679	4/30/2014 10:27:00 PM	KEB	EPA 6020A	
Mercury-ICPMS	ND	mg/Kg	0.0679	4/30/2014 10:27:00 PM	KEB	EPA 6020A	
Zinc	34.0	mg/Kg	0.679	4/30/2014 10:27:00 PM	KEB	EPA 6020A	
%moisture	26.4	Percent		4/22/2014	BJR	%moisture	

Sample Number	140417045-056	**Sampling Date**	4/15/2014	**Date/Time Received**	4/17/2014 12:00 PM
Client Sample ID	HA-19(6-6.5)	**Sampling Time**	11:11 AM	**Extraction Date**	
Matrix	Soil	**Sample Location**			
Comments					

Parameter	Result	Units	PQL	Analysis Date	Analyst	Method	Qualifier
Cadmium	ND	mg/Kg	0.583	4/30/2014 10:35:00 PM	KEB	EPA 6020A	
Copper	8.66	mg/Kg	0.583	4/30/2014 10:35:00 PM	KEB	EPA 6020A	
Lead	5.20	mg/Kg	0.583	4/30/2014 10:35:00 PM	KEB	EPA 6020A	
Mercury-ICPMS	ND	mg/Kg	0.0583	4/30/2014 10:35:00 PM	KEB	EPA 6020A	
Zinc	22.7	mg/Kg	0.583	4/30/2014 10:35:00 PM	KEB	EPA 6020A	
%moisture	15.2	Percent		4/22/2014	BJR	%moisture	

Preliminary Draft for Agency Review

Anatek Labs, Inc.

1282 Alturas Drive • Moscow, ID 83843 • (208) 883-2839 • Fax (208) 882-9246 • email moscow@anateklabs.com
504 E Sprague Ste. D • Spokane WA 99202 • (509) 838-3999 • Fax (509) 838-4433 • email spokane@anateklabs.com

Client: GEO ENGINEERS
Address: 523 E 2ND
SPOKANE, WA 99202
Attn: SCOTT LATHEN

Batch #: 140417045
Project Name: CLARK FORK RIVER DELTA 15387-014-00

Analytical Results Report

Sample Number	140417045-057	**Sampling Date**	4/15/2014	**Date/Time Received**	4/17/2014 12:00 PM
Client Sample ID	HA-20(1.5-2)	**Sampling Time**	11:22 AM	**Extraction Date**	
Matrix	Soil	**Sample Location**			
Comments					

Parameter	Result	Units	PQL	Analysis Date	Analyst	Method	Qualifier
Cadmium	ND	mg/Kg	0.61	4/30/2014 10:42:00 PM	KEB	EPA 6020A	
Copper	16.0	mg/Kg	0.61	4/30/2014 10:42:00 PM	KEB	EPA 6020A	
Lead	8.91	mg/Kg	0.61	4/30/2014 10:42:00 PM	KEB	EPA 6020A	
Mercury-ICPMS	ND	mg/Kg	0.061	4/30/2014 10:42:00 PM	KEB	EPA 6020A	
Zinc	33.1	mg/Kg	0.61	4/30/2014 10:42:00 PM	KEB	EPA 6020A	
%moisture	19.1	Percent		4/22/2014	BJR	%moisture	

Sample Number	140417045-058	**Sampling Date**	4/15/2014	**Date/Time Received**	4/17/2014 12:00 PM
Client Sample ID	HA-20(4.5-5)	**Sampling Time**	11:25 AM	**Extraction Date**	
Matrix	Soil	**Sample Location**			
Comments					

Parameter	Result	Units	PQL	Analysis Date	Analyst	Method	Qualifier
Cadmium	ND	mg/Kg	0.622	4/30/2014 10:49:00 PM	KEB	EPA 6020A	
Copper	12.4	mg/Kg	0.622	4/30/2014 10:49:00 PM	KEB	EPA 6020A	
Lead	7.51	mg/Kg	0.622	4/30/2014 10:49:00 PM	KEB	EPA 6020A	
Mercury-ICPMS	ND	mg/Kg	0.0622	4/30/2014 10:49:00 PM	KEB	EPA 6020A	
Zinc	32.5	mg/Kg	0.622	4/30/2014 10:49:00 PM	KEB	EPA 6020A	
%moisture	22.4	Percent		4/22/2014	BJR	%moisture	

Preliminary Draft for Agency Review

Anatek Labs, Inc.

1282 Alturas Drive • Moscow, ID 83843 • (208) 883-2839 • Fax (208) 882-9246 • email moscow@anateklabs.com
504 E Sprague Ste. D • Spokane WA 99202 • (509) 838-3999 • Fax (509) 838-4433 • email spokane@anateklabs.com

Client: GEO ENGINEERS
Address: 523 E 2ND
SPOKANE, WA 99202
Attn: SCOTT LATHEN

Batch #: 140417045
Project Name: CLARK FORK RIVER DELTA 15387-014-00

Analytical Results Report

Sample Number 140417045-059 **Sampling Date** 4/15/2014 **Date/Time Received** 4/17/2014 12:00 PM
Client Sample ID HA-20(6.5-7) **Sampling Time** 11:31 AM **Extraction Date**
Matrix Soil **Sample Location**
Comments

Parameter	Result	Units	PQL	Analysis Date	Analyst	Method	Qualifier
Cadmium	ND	mg/Kg	0.66	4/30/2014 10:57:00 PM	KEB	EPA 6020A	
Copper	18.5	mg/Kg	0.66	4/30/2014 10:57:00 PM	KEB	EPA 6020A	
Lead	12.5	mg/Kg	0.66	4/30/2014 10:57:00 PM	KEB	EPA 6020A	
Mercury-ICPMS	ND	mg/Kg	0.066	4/30/2014 10:57:00 PM	KEB	EPA 6020A	
Zinc	42.6	mg/Kg	0.66	4/30/2014 10:57:00 PM	KEB	EPA 6020A	
%moisture	25.1	Percent		4/22/2014	BJR	%moisture	

Sample Number 140417045-060 **Sampling Date** 4/15/2014 **Date/Time Received** 4/17/2014 12:00 PM
Client Sample ID HA-21(1.5-2) **Sampling Time** 11:56 AM **Extraction Date**
Matrix Soil **Sample Location**
Comments

Parameter	Result	Units	PQL	Analysis Date	Analyst	Method	Qualifier
Cadmium	ND	mg/Kg	0.651	4/30/2014 11:04:00 PM	KEB	EPA 6020A	
Copper	21.4	mg/Kg	0.651	4/30/2014 11:04:00 PM	KEB	EPA 6020A	
Lead	13.2	mg/Kg	0.651	4/30/2014 11:04:00 PM	KEB	EPA 6020A	
Mercury-ICPMS	ND	mg/Kg	0.0651	4/30/2014 11:04:00 PM	KEB	EPA 6020A	
Zinc	72.5	mg/Kg	0.651	4/30/2014 11:04:00 PM	KEB	EPA 6020A	
%moisture	23.7	Percent		4/22/2014	BJR	%moisture	

Preliminary Draft for Agency Review

Anatek Labs, Inc.

1282 Alturas Drive • Moscow, ID 83843 • (208) 883-2839 • Fax (208) 882-9246 • email moscow@anateklabs.com
504 E Sprague Ste. D • Spokane WA 99202 • (509) 838-3999 • Fax (509) 838-4433 • email spokane@anateklabs.com

Client: GEO ENGINEERS
Address: 523 E 2ND
SPOKANE, WA 99202
Attn: SCOTT LATHEN

Batch #: 140417045
Project Name: CLARK FORK RIVER DELTA 15387-014-00

Analytical Results Report

Sample Number	140417045-061	**Sampling Date**	4/15/2014	**Date/Time Received**	4/17/2014 12:00 PM
Client Sample ID	HA-21(4.5-5)	**Sampling Time**	12:01 PM	**Extraction Date**	
Matrix	Soil	**Sample Location**			
Comments					

Parameter	Result	Units	PQL	Analysis Date	Analyst	Method	Qualifier
Cadmium	ND	mg/Kg	0.634	5/1/2014 12:17:00 AM	KEB	EPA 6020A	
Copper	18.1	mg/Kg	0.634	5/1/2014 12:17:00 AM	KEB	EPA 6020A	
Lead	11.1	mg/Kg	0.634	5/1/2014 12:17:00 AM	KEB	EPA 6020A	
Mercury-ICPMS	ND	mg/Kg	0.0634	5/1/2014 12:17:00 AM	KEB	EPA 6020A	
Zinc	42.5	mg/Kg	0.634	5/1/2014 12:17:00 AM	KEB	EPA 6020A	
%moisture	23	Percent		4/23/2014	BJR	%moisture	

Sample Number	140417045-062	**Sampling Date**	4/15/2014	**Date/Time Received**	4/17/2014 12:00 PM
Client Sample ID	HA-21(6.5-7)	**Sampling Time**	12:10 PM	**Extraction Date**	
Matrix	Soil	**Sample Location**			
Comments					

Parameter	Result	Units	PQL	Analysis Date	Analyst	Method	Qualifier
Cadmium	ND	mg/Kg	0.652	5/1/2014 12:39:00 AM	KEB	EPA 6020A	
Copper	19.9	mg/Kg	0.652	5/1/2014 12:39:00 AM	KEB	EPA 6020A	
Lead	11.3	mg/Kg	0.652	5/1/2014 12:39:00 AM	KEB	EPA 6020A	
Mercury-ICPMS	ND	mg/Kg	0.0652	5/1/2014 12:39:00 AM	KEB	EPA 6020A	
Zinc	41.6	mg/Kg	0.652	5/1/2014 12:39:00 AM	KEB	EPA 6020A	
%moisture	24.7	Percent		4/23/2014	BJR	%moisture	

Preliminary Draft for Agency Review

Certifications held by Anatek Labs ID: EPA:ID00013; AZ:0701; CO:ID00013; FL(NELAP):E87893; ID:ID00013; MT:CERT0028; NM: ID00013; OR:ID200001-002; WA:C595
Certifications held by Anatek Labs WA: EPA:WA00169; ID:WA00169; WA:C585; MT:Cert0095; FL(NELAP): E871099

Anatek Labs, Inc.

1282 Alturas Drive • Moscow, ID 83843 • (208) 883-2839 • Fax (208) 882-9246 • email moscow@anateklabs.com
504 E Sprague Ste. D • Spokane WA 99202 • (509) 838-3999 • Fax (509) 838-4433 • email spokane@anateklabs.com

Client: GEO ENGINEERS
Address: 523 E 2ND
SPOKANE, WA 99202
Attn: SCOTT LATHEN

Batch #: 140417045
Project Name: CLARK FORK RIVER DELTA 15387-014-00

Analytical Results Report

Sample Number	140417045-063	**Sampling Date**	4/15/2014	**Date/Time Received**	4/17/2014 12:00 PM
Client Sample ID	HA-21(9-9.5)	**Sampling Time**	12:15 PM	**Extraction Date**	
Matrix	Soil	**Sample Location**			
Comments					

Parameter	Result	Units	PQL	Analysis Date	Analyst	Method	Qualifier
Cadmium	ND	mg/Kg	0.632	5/1/2014 12:46:00 AM	KEB	EPA 6020A	
Copper	15.1	mg/Kg	0.632	5/1/2014 12:46:00 AM	KEB	EPA 6020A	
Lead	9.08	mg/Kg	0.632	5/1/2014 12:46:00 AM	KEB	EPA 6020A	
Mercury-ICPMS	ND	mg/Kg	0.0632	5/1/2014 12:46:00 AM	KEB	EPA 6020A	
Zinc	34.9	mg/Kg	0.632	5/1/2014 12:46:00 AM	KEB	EPA 6020A	
%moisture	23.5	Percent		4/23/2014	BJR	%moisture	

Sample Number	140417045-064	**Sampling Date**	4/15/2014	**Date/Time Received**	4/17/2014 12:00 PM
Client Sample ID	HA-22(2-2.5)	**Sampling Time**	1:25 PM	**Extraction Date**	
Matrix	Soil	**Sample Location**			
Comments					

Parameter	Result	Units	PQL	Analysis Date	Analyst	Method	Qualifier
Cadmium	ND	mg/Kg	0.721	5/1/2014 12:54:00 AM	KEB	EPA 6020A	
Copper	26.3	mg/Kg	0.721	5/1/2014 12:54:00 AM	KEB	EPA 6020A	
Lead	15.4	mg/Kg	0.721	5/1/2014 12:54:00 AM	KEB	EPA 6020A	
Mercury-ICPMS	ND	mg/Kg	0.0721	5/1/2014 12:54:00 AM	KEB	EPA 6020A	
Zinc	73.5	mg/Kg	0.721	5/1/2014 12:54:00 AM	KEB	EPA 6020A	
%moisture	31.1	Percent		4/23/2014	BJR	%moisture	

Preliminary Draft for Agency Review

Anatek Labs, Inc.

1282 Alturas Drive • Moscow, ID 83843 • (208) 883-2839 • Fax (208) 882-9246 • email moscow@anateklabs.com
504 E Sprague Ste. D • Spokane WA 99202 • (509) 838-3999 • Fax (509) 838-4433 • email spokane@anateklabs.com

Client: GEO ENGINEERS
Address: 523 E 2ND
SPOKANE, WA 99202
Attn: SCOTT LATHEN

Batch #: 140417045
Project Name: CLARK FORK RIVER DELTA 15387-014-00

Analytical Results Report

Sample Number	140417045-065	**Sampling Date**	4/15/2014	**Date/Time Received**	4/17/2014 12:00 PM
Client Sample ID	HA-22(4.5-5)	**Sampling Time**	1:31 PM	**Extraction Date**	
Matrix	Soil	**Sample Location**			
Comments					

Parameter	Result	Units	PQL	Analysis Date	Analyst	Method	Qualifier
Cadmium	ND	mg/Kg	0.648	5/1/2014 1:01:00 AM	KEB	EPA 6020A	
Copper	19.9	mg/Kg	0.648	5/1/2014 1:01:00 AM	KEB	EPA 6020A	
Lead	12.0	mg/Kg	0.648	5/1/2014 1:01:00 AM	KEB	EPA 6020A	
Mercury-ICPMS	ND	mg/Kg	0.0648	5/1/2014 1:01:00 AM	KEB	EPA 6020A	
Zinc	37.8	mg/Kg	0.648	5/1/2014 1:01:00 AM	KEB	EPA 6020A	
%moisture	25.7	Percent		4/23/2014	BJR	%moisture	

Sample Number	140417045-066	**Sampling Date**	4/15/2014	**Date/Time Received**	4/17/2014 12:00 PM
Client Sample ID	HA-22(6.5-7)	**Sampling Time**	1:41 PM	**Extraction Date**	
Matrix	Soil	**Sample Location**			
Comments					

Parameter	Result	Units	PQL	Analysis Date	Analyst	Method	Qualifier
Cadmium	ND	mg/Kg	0.698	5/1/2014 1:38:00 AM	KEB	EPA 6020A	
Copper	20.5	mg/Kg	0.698	5/1/2014 1:38:00 AM	KEB	EPA 6020A	
Lead	10.5	mg/Kg	0.698	5/1/2014 1:38:00 AM	KEB	EPA 6020A	
Mercury-ICPMS	ND	mg/Kg	0.0698	5/1/2014 1:38:00 AM	KEB	EPA 6020A	
Zinc	50.5	mg/Kg	0.698	5/1/2014 1:38:00 AM	KEB	EPA 6020A	
%moisture	29.9	Percent		4/23/2014	BJR	%moisture	

Preliminary Draft for Agency Review

Anatek Labs, Inc.

1282 Alturas Drive • Moscow, ID 83843 • (208) 883-2839 • Fax (208) 882-9246 • email moscow@anateklabs.com
504 E Sprague Ste. D • Spokane WA 99202 • (509) 838-3999 • Fax (509) 838-4433 • email spokane@anateklabs.com

Client: GEO ENGINEERS
Address: 523 E 2ND
SPOKANE, WA 99202
Attn: SCOTT LATHEN

Batch #: 140417045
Project Name: CLARK FORK RIVER DELTA 15387-014-00

Analytical Results Report

Sample Number	140417045-067	**Sampling Date**	4/15/2014	**Date/Time Received**	4/17/2014 12:00 PM
Client Sample ID	HA-23(1.5-2)	**Sampling Time**	2:24 PM	**Extraction Date**	
Matrix	Soil	**Sample Location**			
Comments					

Parameter	Result	Units	PQL	Analysis Date	Analyst	Method	Qualifier
Cadmium	0.662	mg/Kg	0.644	5/1/2014 1:45:00 AM	KEB	EPA 6020A	
Copper	21.1	mg/Kg	0.644	5/1/2014 1:45:00 AM	KEB	EPA 6020A	
Lead	13.9	mg/Kg	0.644	5/1/2014 1:45:00 AM	KEB	EPA 6020A	
Mercury-ICPMS	ND	mg/Kg	0.0644	5/1/2014 1:45:00 AM	KEB	EPA 6020A	
Zinc	67.6	mg/Kg	0.644	5/1/2014 1:45:00 AM	KEB	EPA 6020A	
%moisture	25	Percent		4/23/2014	BJR	%moisture	

Sample Number	140417045-068	**Sampling Date**	4/15/2014	**Date/Time Received**	4/17/2014 12:00 PM
Client Sample ID	HA-23(4.5-5)	**Sampling Time**	2:32 PM	**Extraction Date**	
Matrix	Soil	**Sample Location**			
Comments					

Parameter	Result	Units	PQL	Analysis Date	Analyst	Method	Qualifier
Cadmium	ND	mg/Kg	0.627	5/1/2014 1:53:00 AM	KEB	EPA 6020A	
Copper	17.7	mg/Kg	0.627	5/1/2014 1:53:00 AM	KEB	EPA 6020A	
Lead	10.5	mg/Kg	0.627	5/1/2014 1:53:00 AM	KEB	EPA 6020A	
Mercury-ICPMS	ND	mg/Kg	0.0627	5/1/2014 1:53:00 AM	KEB	EPA 6020A	
Zinc	36.7	mg/Kg	0.627	5/1/2014 1:53:00 AM	KEB	EPA 6020A	
%moisture	23.3	Percent		4/23/2014	BJR	%moisture	

Preliminary Draft for Agency Review

Anatek Labs, Inc.

1282 Alturas Drive • Moscow, ID 83843 • (208) 883-2839 • Fax (208) 882-9246 • email moscow@anateklabs.com
504 E Sprague Ste. D • Spokane WA 99202 • (509) 838-3999 • Fax (509) 838-4433 • email spokane@anateklabs.com

Client: GEO ENGINEERS
Address: 523 E 2ND
SPOKANE, WA 99202
Attn: SCOTT LATHEN

Batch #: 140417045
Project Name: CLARK FORK RIVER DELTA 15387-014-00

Analytical Results Report

Sample Number	140417045-069	**Sampling Date**	4/15/2014	**Date/Time Received**	4/17/2014 12:00 PM
Client Sample ID	HA-23(6.5-7)	**Sampling Time**	2:37 PM	**Extraction Date**	
Matrix	Soil	**Sample Location**			
Comments					

Parameter	Result	Units	PQL	Analysis Date	Analyst	Method	Qualifier
Cadmium	ND	mg/Kg	0.673	5/1/2014 2:00:00 AM	KEB	EPA 6020A	
Copper	21.6	mg/Kg	0.673	5/1/2014 2:00:00 AM	KEB	EPA 6020A	
Lead	12.3	mg/Kg	0.673	5/1/2014 2:00:00 AM	KEB	EPA 6020A	
Mercury-ICPMS	ND	mg/Kg	0.0673	5/1/2014 2:00:00 AM	KEB	EPA 6020A	
Zinc	40.5	mg/Kg	0.673	5/1/2014 2:00:00 AM	KEB	EPA 6020A	
%moisture	27.6	Percent		4/23/2014	BJR	%moisture	

Sample Number	140417045-070	**Sampling Date**	4/15/2014	**Date/Time Received**	4/17/2014 12:00 PM
Client Sample ID	HA-24(1.5-2)	**Sampling Time**	12:45 PM	**Extraction Date**	
Matrix	Soil	**Sample Location**			
Comments					

Parameter	Result	Units	PQL	Analysis Date	Analyst	Method	Qualifier
Cadmium	ND	mg/Kg	0.662	5/1/2014 2:08:00 AM	KEB	EPA 6020A	
Copper	21.2	mg/Kg	0.662	5/1/2014 2:08:00 AM	KEB	EPA 6020A	
Lead	12.7	mg/Kg	0.662	5/1/2014 2:08:00 AM	KEB	EPA 6020A	
Mercury-ICPMS	ND	mg/Kg	0.0662	5/1/2014 2:08:00 AM	KEB	EPA 6020A	
Zinc	38.3	mg/Kg	0.662	5/1/2014 2:08:00 AM	KEB	EPA 6020A	
%moisture	26.7	Percent		4/23/2014	BJR	%moisture	

Preliminary Draft for Agency Review

Anatek Labs, Inc.

1282 Alturas Drive • Moscow, ID 83843 • (208) 883-2839 • Fax (208) 882-9246 • email moscow@anateklabs.com
504 E Sprague Ste. D • Spokane WA 99202 • (509) 838-3999 • Fax (509) 838-4433 • email spokane@anateklabs.com

Client: GEO ENGINEERS
Address: 523 E 2ND
SPOKANE, WA 99202
Attn: SCOTT LATHEN

Batch #: 140417045
Project Name: CLARK FORK RIVER DELTA 15387-014-00

Analytical Results Report

Sample Number	140417045-071	**Sampling Date**	4/15/2014	**Date/Time Received**	4/17/2014 12:00 PM
Client Sample ID	HA-24(4.5-5)	**Sampling Time**	12:52 PM	**Extraction Date**	
Matrix	Soil	**Sample Location**			
Comments					

Parameter	Result	Units	PQL	Analysis Date	Analyst	Method	Qualifier
Cadmium	ND	mg/Kg	0.64	5/1/2014 2:15:00 AM	KEB	EPA 6020A	
Copper	17.2	mg/Kg	0.64	5/1/2014 2:15:00 AM	KEB	EPA 6020A	
Lead	9.43	mg/Kg	0.64	5/1/2014 2:15:00 AM	KEB	EPA 6020A	
Mercury-ICPMS	ND	mg/Kg	0.064	5/1/2014 2:15:00 AM	KEB	EPA 6020A	
Zinc	34.2	mg/Kg	0.64	5/1/2014 2:15:00 AM	KEB	EPA 6020A	
%moisture	24.4	Percent		4/23/2014	BJR	%moisture	

Sample Number	140417045-072	**Sampling Date**	4/15/2014	**Date/Time Received**	4/17/2014 12:00 PM
Client Sample ID	HA-24(7-7.5)	**Sampling Time**	12:56 PM	**Extraction Date**	
Matrix	Soil	**Sample Location**			
Comments					

Parameter	Result	Units	PQL	Analysis Date	Analyst	Method	Qualifier
Cadmium	ND	mg/Kg	0.63	5/1/2014 2:22:00 AM	KEB	EPA 6020A	
Copper	13.8	mg/Kg	0.63	5/1/2014 2:22:00 AM	KEB	EPA 6020A	
Lead	8.57	mg/Kg	0.63	5/1/2014 2:22:00 AM	KEB	EPA 6020A	
Mercury-ICPMS	ND	mg/Kg	0.063	5/1/2014 2:22:00 AM	KEB	EPA 6020A	
Zinc	32.5	mg/Kg	0.63	5/1/2014 2:22:00 AM	KEB	EPA 6020A	
%moisture	24.3	Percent		4/23/2014	BJR	%moisture	

Preliminary Draft for Agency Review

Anatek Labs, Inc.

1282 Alturas Drive • Moscow, ID 83843 • (208) 883-2839 • Fax (208) 882-9246 • email moscow@anateklabs.com
504 E Sprague Ste. D • Spokane WA 99202 • (509) 838-3999 • Fax (509) 838-4433 • email spokane@anateklabs.com

Client: GEO ENGINEERS
Address: 523 E 2ND
SPOKANE, WA 99202
Attn: SCOTT LATHEN

Batch #: 140417045
Project Name: CLARK FORK RIVER DELTA 15387-014-00

Analytical Results Report

Sample Number	140417045-073	**Sampling Date**	4/15/2014	**Date/Time Received**	4/17/2014 12:00 PM
Client Sample ID	HA-25(2.5-3)	**Sampling Time**	1:59 PM	**Extraction Date**	
Matrix	Soil	**Sample Location**			
Comments					

Parameter	Result	Units	PQL	Analysis Date	Analyst	Method	Qualifier
Cadmium	ND	mg/Kg	0.666	5/1/2014 2:30:00 AM	KEB	EPA 6020A	
Copper	17.2	mg/Kg	0.666	5/1/2014 2:30:00 AM	KEB	EPA 6020A	
Lead	9.26	mg/Kg	0.666	5/1/2014 2:30:00 AM	KEB	EPA 6020A	
Mercury-ICPMS	ND	mg/Kg	0.0666	5/1/2014 2:30:00 AM	KEB	EPA 6020A	
Zinc	33.3	mg/Kg	0.666	5/1/2014 2:30:00 AM	KEB	EPA 6020A	
%moisture	27.2	Percent		4/23/2014	BJR	%moisture	

Sample Number	140417045-074	**Sampling Date**	4/15/2014	**Date/Time Received**	4/17/2014 12:00 PM
Client Sample ID	HA-25(4.5-5)	**Sampling Time**	2:02 PM	**Extraction Date**	
Matrix	Soil	**Sample Location**			
Comments					

Parameter	Result	Units	PQL	Analysis Date	Analyst	Method	Qualifier
Cadmium	ND	mg/Kg	0.636	5/1/2014 4:37:00 AM	KEB	EPA 6020A	
Copper	29.5	mg/Kg	0.636	5/1/2014 4:37:00 AM	KEB	EPA 6020A	
Lead	11.8	mg/Kg	0.636	5/1/2014 4:37:00 AM	KEB	EPA 6020A	
Mercury-ICPMS	ND	mg/Kg	0.0636	5/1/2014 4:37:00 AM	KEB	EPA 6020A	
Zinc	37.7	mg/Kg	0.636	5/1/2014 4:37:00 AM	KEB	EPA 6020A	
%moisture	24.1	Percent		4/23/2014	BJR	%moisture	

Preliminary Draft for Agency Review

Certifications held by Anatek Labs ID: EPA:ID00013; AZ:0701; CO:ID00013; FL(NELAP):E87893; ID:ID00013; MT:CERT0028; NM: ID00013; OR:ID200001-002; WA:C595
Certifications held by Anatek Labs WA: EPA:WA00169; ID:WA00169; WA:C585; MT:Cert0095; FL(NELAP): E871099

Anatek Labs, Inc.

1282 Alturas Drive • Moscow, ID 83843 • (208) 883-2839 • Fax (208) 882-9246 • email moscow@anateklabs.com
504 E Sprague Ste. D • Spokane WA 99202 • (509) 838-3999 • Fax (509) 838-4433 • email spokane@anateklabs.com

Client: GEO ENGINEERS
Address: 523 E 2ND
SPOKANE, WA 99202
Attn: SCOTT LATHEN

Batch #: 140417045
Project Name: CLARK FORK RIVER DELTA 15387-014-00

Analytical Results Report

Sample Number	140417045-075	**Sampling Date**	4/15/2014	**Date/Time Received**	4/17/2014 12:00 PM
Client Sample ID	HA-25(6.5-7)	**Sampling Time**	2:07 PM	**Extraction Date**	
Matrix	Soil	**Sample Location**			
Comments					

Parameter	Result	Units	PQL	Analysis Date	Analyst	Method	Qualifier
Cadmium	ND	mg/Kg	0.678	5/1/2014 2:44:00 AM	KEB	EPA 6020A	
Copper	10.6	mg/Kg	0.678	5/1/2014 2:44:00 AM	KEB	EPA 6020A	
Lead	6.98	mg/kg	0.678	5/1/2014 2:44:00 AM	KEB	EPA 6020A	
Mercury-ICPMS	ND	mg/Kg	0.0678	5/1/2014 2:44:00 AM	KEB	EPA 6020A	
Zinc	26.6	mg/Kg	0.678	5/1/2014 2:44:00 AM	KEB	EPA 6020A	
%moisture	28	Percent		4/23/2014	BJR	%moisture	

Sample Number	140417045-076	**Sampling Date**	4/15/2014	**Date/Time Received**	4/17/2014 12:00 PM
Client Sample ID	HA-25(8.5-9)	**Sampling Time**	2:11 PM	**Extraction Date**	
Matrix	Soil	**Sample Location**			
Comments					

Parameter	Result	Units	PQL	Analysis Date	Analyst	Method	Qualifier
Cadmium	ND	mg/Kg	0.612	5/1/2014 7:25:00 PM	KEB	EPA 6020A	
Copper	5.21	mg/Kg	0.612	5/1/2014 7:25:00 PM	KEB	EPA 6020A	
Lead	3.77	mg/Kg	0.612	5/1/2014 7:25:00 PM	KEB	EPA 6020A	
Mercury-ICPMS	ND	mg/Kg	0.0612	5/1/2014 7:25:00 PM	KEB	EPA 6020A	
Zinc	17.4	mg/Kg	0.612	5/1/2014 7:25:00 PM	KEB	EPA 6020A	
%moisture	18.3	Percent		4/23/2014	BJR	%moisture	

Preliminary Draft for Agency Review

Anatek Labs, Inc.

1282 Alturas Drive • Moscow, ID 83843 • (208) 883-2839 • Fax (208) 882-9246 • email moscow@anateklabs.com
504 E Sprague Ste. D • Spokane WA 99202 • (509) 838-3999 • Fax (509) 838-4433 • email spokane@anateklabs.com

Client: GEO ENGINEERS
Address: 523 E 2ND
SPOKANE, WA 99202
Attn: SCOTT LATHEN

Batch #: 140417045
Project Name: CLARK FORK RIVER DELTA 15387-014-00

Analytical Results Report

Sample Number	140417045-077	**Sampling Date**	4/16/2014	**Date/Time Received**	4/17/2014 12:00 PM
Client Sample ID	HA-26(1.5-2)	**Sampling Time**	11:21 AM	**Extraction Date**	
Matrix	Soil	**Sample Location**			
Comments					

Parameter	Result	Units	PQL	Analysis Date	Analyst	Method	Qualifier
Cadmium	ND	mg/Kg	0.706	5/1/2014 3:14:00 AM	KEB	EPA 6020A	
Copper	13.3	mg/Kg	0.706	5/1/2014 3:14:00 AM	KEB	EPA 6020A	
Lead	8.59	mg/Kg	0.706	5/1/2014 3:14:00 AM	KEB	EPA 6020A	
Mercury-ICPMS	ND	mg/Kg	0.0706	5/1/2014 3:14:00 AM	KEB	EPA 6020A	
Zinc	29.5	mg/Kg	0.706	5/1/2014 3:14:00 AM	KEB	EPA 6020A	
%moisture	30.6	Percent		4/23/2014	BJR	%moisture	

Sample Number	140417045-078	**Sampling Date**	4/16/2014	**Date/Time Received**	4/17/2014 12:00 PM
Client Sample ID	HA-26(5-5.5)	**Sampling Time**	11:25 AM	**Extraction Date**	
Matrix	Soil	**Sample Location**			
Comments					

Parameter	Result	Units	PQL	Analysis Date	Analyst	Method	Qualifier
Cadmium	ND	mg/Kg	0.687	5/1/2014 3:21:00 AM	KEB	EPA 6020A	
Copper	10.6	mg/Kg	0.687	5/1/2014 3:21:00 AM	KEB	EPA 6020A	
Lead	6.84	mg/Kg	0.687	5/1/2014 3:21:00 AM	KEB	EPA 6020A	
Mercury-ICPMS	ND	mg/Kg	0.0687	5/1/2014 3:21:00 AM	KEB	EPA 6020A	
Zinc	26.6	mg/Kg	0.687	5/1/2014 3:21:00 AM	KEB	EPA 6020A	
%moisture	30.4	Percent		4/23/2014	BJR	%moisture	

Preliminary Draft for Agency Review

Anatek Labs, Inc.

1282 Alturas Drive • Moscow, ID 83843 • (208) 883-2839 • Fax (208) 882-9246 • email moscow@anateklabs.com
504 E Sprague Ste. D • Spokane WA 99202 • (509) 838-3999 • Fax (509) 838-4433 • email spokane@anateklabs.com

Client: GEO ENGINEERS
Address: 523 E 2ND
SPOKANE, WA 99202
Attn: SCOTT LATHEN

Batch #: 140417045
Project Name: CLARK FORK RIVER DELTA 15387-014-00

Analytical Results Report

Sample Number	140417045-079	**Sampling Date**	4/16/2014	**Date/Time Received**	4/17/2014 12:00 PM
Client Sample ID	HA-26(6.5-7)	**Sampling Time**	11:28 AM	**Extraction Date**	
Matrix	Soil	**Sample Location**			
Comments					

Parameter	Result	Units	PQL	Analysis Date	Analyst	Method	Qualifier
Cadmium	ND	mg/Kg	0.657	5/1/2014 3:29:00 AM	KEB	EPA 6020A	
Copper	5.40	mg/Kg	0.657	5/1/2014 3:29:00 AM	KEB	EPA 6020A	
Lead	4.01	mg/Kg	0.657	5/1/2014 3:29:00 AM	KEB	EPA 6020A	
Mercury-ICPMS	ND	mg/Kg	0.0657	5/1/2014 3:29:00 AM	KEB	EPA 6020A	
Zinc	19.0	mg/Kg	0.657	5/1/2014 3:29:00 AM	KEB	EPA 6020A	
%moisture	24.4	Percent		4/23/2014	BJR	%moisture	

Sample Number	140417045-080	**Sampling Date**	4/16/2014	**Date/Time Received**	4/17/2014 12:00 PM
Client Sample ID	HA-26(9-9.5)	**Sampling Time**	11:34 AM	**Extraction Date**	
Matrix	Soil	**Sample Location**			
Comments					

Parameter	Result	Units	PQL	Analysis Date	Analyst	Method	Qualifier
Cadmium	ND	mg/Kg	0.001	5/1/2014 3:36:00 AM	KEB	EPA 6020A	
Copper	ND	mg/Kg	0.001	5/1/2014 3:36:00 AM	KEB	EPA 6020A	
Lead	ND	mg/Kg	0.001	5/1/2014 3:36:00 AM	KEB	EPA 6020A	
Mercury-ICPMS	ND	mg/Kg	0.0001	5/1/2014 3:36:00 AM	KEB	EPA 6020A	
Zinc	ND	mg/Kg	0.001	5/1/2014 3:36:00 AM	KEB	EPA 6020A	
%moisture	23.9	Percent		4/23/2014	BJR	%moisture	

Preliminary Draft for Agency Review

Anatek Labs, Inc.

1282 Alturas Drive • Moscow, ID 83843 • (208) 883-2839 • Fax (208) 882-9246 • email moscow@anateklabs.com
504 E Sprague Ste. D • Spokane WA 99202 • (509) 838-3999 • Fax (509) 838-4433 • email spokane@anateklabs.com

Client: GEO ENGINEERS
Address: 523 E 2ND
SPOKANE, WA 99202
Attn: SCOTT LATHEN

Batch #: 140417045
Project Name: CLARK FORK RIVER DELTA 15387-014-00

Analytical Results Report

Sample Number 140417045-081 **Sampling Date** 4/15/2014 **Date/Time Received** 4/17/2014 12:00 PM
Client Sample ID HA-27(1.5-2) **Sampling Time** 3:02 PM **Extraction Date**
Matrix Soil **Sample Location**
Comments

Parameter	Result	Units	PQL	Analysis Date	Analyst	Method	Qualifier
Cadmium	ND	mg/Kg	0.717	5/1/2014 8:16:00 AM	KEB	EPA 6020A	
Copper	26.4	mg/Kg	0.717	5/1/2014 8:16:00 AM	KEB	EPA 6020A	
Lead	13.7	mg/Kg	0.717	5/1/2014 8:16:00 AM	KEB	EPA 6020A	
Mercury-ICPMS	ND	mg/Kg	0.0717	5/1/2014 8:16:00 AM	KEB	EPA 6020A	
Zinc	59.1	mg/Kg	0.717	5/1/2014 8:16:00 AM	KEB	EPA 6020A	
%moisture	31.4	Percent		4/23/2014	BJR	%moisture	

Sample Number 140417045-082 **Sampling Date** 4/15/2014 **Date/Time Received** 4/17/2014 12:00 PM
Client Sample ID HA-27(4.5-5) **Sampling Time** 3:06 PM **Extraction Date**
Matrix Soil **Sample Location**
Comments

Parameter	Result	Units	PQL	Analysis Date	Analyst	Method	Qualifier
Cadmium	ND	mg/Kg	0.622	5/1/2014 9:34:00 AM	KEB	EPA 6020A	
Copper	14.4	mg/Kg	0.622	5/1/2014 9:34:00 AM	KEB	EPA 6020A	
Lead	10.3	mg/Kg	0.622	5/1/2014 9:34:00 AM	KEB	EPA 6020A	
Mercury-ICPMS	ND	mg/Kg	0.0622	5/1/2014 9:34:00 AM	KEB	EPA 6020A	
Zinc	36.8	mg/Kg	0.622	5/1/2014 9:34:00 AM	KEB	EPA 6020A	
%moisture	21.3	Percent		4/23/2014	BJR	%moisture	

Preliminary Draft for Agency Review

Anatek Labs, Inc.

1282 Alturas Drive • Moscow, ID 83843 • (208) 883-2839 • Fax (208) 882-9246 • email moscow@anateklabs.com
504 E Sprague Ste. D • Spokane WA 99202 • (509) 838-3999 • Fax (509) 838-4433 • email spokane@anateklabs.com

Client: GEO ENGINEERS
Address: 523 E 2ND
SPOKANE, WA 99202
Attn: SCOTT LATHEN

Batch #: 140417045
Project Name: CLARK FORK RIVER DELTA 15387-014-00

Analytical Results Report

Sample Number	140417045-083	**Sampling Date**	4/15/2014	**Date/Time Received**	4/17/2014 12:00 PM
Client Sample ID	HA-27(6.5-7)	**Sampling Time**	3:13 PM	**Extraction Date**	
Matrix	Soil	**Sample Location**			
Comments					

Parameter	Result	Units	PQL	Analysis Date	Analyst	Method	Qualifier
Cadmium	ND	mg/Kg	0.642	5/1/2014 9:41:00 AM	KEB	EPA 6020A	
Copper	14.9	mg/Kg	0.642	5/1/2014 9:41:00 AM	KEB	EPA 6020A	
Lead	8.46	mg/Kg	0.642	5/1/2014 9:41:00 AM	KEB	EPA 6020A	
Mercury-ICPMS	ND	mg/Kg	0.0642	5/1/2014 9:41:00 AM	KEB	EPA 6020A	
Zinc	32.8	mg/Kg	0.642	5/1/2014 9:41:00 AM	KEB	EPA 6020A	
%moisture	23.6	Percent		4/23/2014	BJR	%moisture	

Sample Number	140417045-084	**Sampling Date**	4/16/2014	**Date/Time Received**	4/17/2014 12:00 PM
Client Sample ID	HA-28(1.5-2)	**Sampling Time**	11:54 AM	**Extraction Date**	
Matrix	Soil	**Sample Location**			
Comments					

Parameter	Result	Units	PQL	Analysis Date	Analyst	Method	Qualifier
Cadmium	14.8	mg/Kg	0.671	5/1/2014 9:49:00 AM	KEB	EPA 6020A	
Copper	14.8	mg/Kg	0.671	5/1/2014 9:49:00 AM	KEB	EPA 6020A	
Lead	8.96	mg/Kg	0.671	5/1/2014 9:49:00 AM	KEB	EPA 6020A	
Mercury-ICPMS	ND	mg/Kg	0.0001	5/1/2014 9:49:00 AM	KEB	EPA 6020A	
Zinc	ND	mg/Kg	0.001	5/1/2014 9:49:00 AM	KEB	EPA 6020A	
%moisture	27	Percent		4/23/2014	BJR	%moisture	

Preliminary Draft for Agency Review

Anatek Labs, Inc.

1282 Alturas Drive • Moscow, ID 83843 • (208) 883-2839 • Fax (208) 882-9246 • email moscow@anateklabs.com
504 E Sprague Ste. D • Spokane WA 99202 • (509) 838-3999 • Fax (509) 838-4433 • email spokane@anateklabs.com

Client: GEO ENGINEERS
Address: 523 E 2ND
SPOKANE, WA 99202
Attn: SCOTT LATHEN

Batch #: 140417045
Project Name: CLARK FORK RIVER DELTA 15387-014-00

Analytical Results Report

Sample Number	140417045-085	**Sampling Date**	4/16/2014	**Date/Time Received**	4/17/2014 12:00 PM
Client Sample ID	HA-28(4.5-5)	**Sampling Time**	11:59 AM	**Extraction Date**	
Matrix	Soil	**Sample Location**			
Comments					

Parameter	Result	Units	PQL	Analysis Date	Analyst	Method	Qualifier
Cadmium	ND	mg/Kg	0.645	5/1/2014 10:18:00 AM	KEB	EPA 6020A	
Copper	15.5	mg/Kg	0.645	5/1/2014 10:18:00 AM	KEB	EPA 6020A	
Lead	9.41	mg/Kg	0.645	5/1/2014 10:18:00 AM	KEB	EPA 6020A	
Mercury-ICPMS	ND	mg/Kg	0.0645	5/1/2014 10:18:00 AM	KEB	EPA 6020A	
Zinc	32.2	mg/Kg	0.645	5/1/2014 10:18:00 AM	KEB	EPA 6020A	
%moisture	26.4	Percent		4/23/2014	BJR	%moisture	

Sample Number	140417045-086	**Sampling Date**	4/16/2014	**Date/Time Received**	4/17/2014 12:00 PM
Client Sample ID	HA-28(6.5-7)	**Sampling Time**	12:03 PM	**Extraction Date**	
Matrix	Soil	**Sample Location**			
Comments					

Parameter	Result	Units	PQL	Analysis Date	Analyst	Method	Qualifier
Cadmium	ND	mg/Kg	0.753	5/1/2014 10:33:00 AM	KEB	EPA 6020A	
Copper	15.6	mg/Kg	0.753	5/1/2014 10:33:00 AM	KEB	EPA 6020A	
Lead	8.95	mg/Kg	0.753	5/1/2014 10:33:00 AM	KEB	EPA 6020A	
Mercury-ICPMS	ND	mg/Kg	0.0753	5/1/2014 10:33:00 AM	KEB	EPA 6020A	
Zinc	29.7	mg/Kg	0.753	5/1/2014 10:33:00 AM	KEB	EPA 6020A	
%moisture	26.8	Percent		4/23/2014	BJR	%moisture	

Preliminary Draft for Agency Review

Anatek Labs, Inc.

1282 Alturas Drive • Moscow, ID 83843 • (208) 883-2839 • Fax (208) 882-9246 • email moscow@anateklabs.com
504 E Sprague Ste. D • Spokane WA 99202 • (509) 838-3999 • Fax (509) 838-4433 • email spokane@anateklabs.com

Client: GEO ENGINEERS
Address: 523 E 2ND
SPOKANE, WA 99202
Attn: SCOTT LATHEN

Batch #: 140417045
Project Name: CLARK FORK RIVER DELTA 15387-014-00

Analytical Results Report

Sample Number	140417045-087	**Sampling Date**	4/16/2014	**Date/Time Received**	4/17/2014 12:00 PM
Client Sample ID	HA-29(1.5-2)	**Sampling Time**	9:30 AM	**Extraction Date**	
Matrix	Soil	**Sample Location**			
Comments					

Parameter	Result	Units	PQL	Analysis Date	Analyst	Method	Qualifier
Cadmium	ND	mg/Kg	0.612	5/1/2014 10:40:00 AM	KEB	EPA 6020A	
Copper	15.2	mg/Kg	0.612	5/1/2014 10:40:00 AM	KEB	EPA 6020A	
Lead	9.21	mg/Kg	0.612	5/1/2014 10:40:00 AM	KEB	EPA 6020A	
Mercury-ICPMS	ND	mg/Kg	0.0612	5/1/2014 10:40:00 AM	KEB	EPA 6020A	
Zinc	30.9	mg/Kg	0.612	5/1/2014 10:40:00 AM	KEB	EPA 6020A	
%moisture	22.4	Percent		4/23/2014	BJR	%moisture	

Sample Number	140417045-088	**Sampling Date**	4/16/2014	**Date/Time Received**	4/17/2014 12:00 PM
Client Sample ID	HA-29(4.5-5)	**Sampling Time**	9:35 AM	**Extraction Date**	
Matrix	Soil	**Sample Location**			
Comments					

Parameter	Result	Units	PQL	Analysis Date	Analyst	Method	Qualifier
Cadmium	ND	mg/Kg	0.681	5/1/2014 10:48:00 AM	KEB	EPA 6020A	
Copper	13.8	mg/Kg	0.681	5/1/2014 10:48:00 AM	KEB	EPA 6020A	
Lead	8.54	mg/Kg	0.681	5/1/2014 10:48:00 AM	KEB	EPA 6020A	
Mercury-ICPMS	ND	mg/Kg	0.0681	5/1/2014 10:48:00 AM	KEB	EPA 6020A	
Zinc	27.0	mg/Kg	0.681	5/1/2014 10:48:00 AM	KEB	EPA 6020A	
%moisture	27.2	Percent		4/23/2014	BJR	%moisture	

Preliminary Draft for Agency Review

Certifications held by Anatek Labs ID: EPA:ID00013; AZ:0701; CO:ID00013; FL(NELAP):E87893; ID:ID00013; MT:CERT0028; NM: ID00013; OR:ID200001-002; WA:C595
Certifications held by Anatek Labs WA: EPA:WA00169; ID:WA00169; WA:C585; MT:Cert0095; FL(NELAP): E871099

Anatek Labs, Inc.

1282 Alturas Drive • Moscow, ID 83843 • (208) 883-2839 • Fax (208) 882-9246 • email moscow@anateklabs.com
504 E Sprague Ste. D • Spokane WA 99202 • (509) 838-3999 • Fax (509) 838-4433 • email spokane@anateklabs.com

Client: GEO ENGINEERS
Address: 523 E 2ND
SPOKANE, WA 99202
Attn: SCOTT LATHEN

Batch #: 140417045
Project Name: CLARK FORK RIVER DELTA 15387-014-00

Analytical Results Report

Sample Number	140417045-089	**Sampling Date**	4/16/2014	**Date/Time Received**	4/17/2014 12:00 PM
Client Sample ID	HA-29(6.5-7)	**Sampling Time**	9:41 AM	**Extraction Date**	
Matrix	Soil	**Sample Location**			
Comments					

Parameter	Result	Units	PQL	Analysis Date	Analyst	Method	Qualifier
Cadmium	ND	mg/Kg	0.635	5/1/2014 10:55:00 AM	KEB	EPA 6020A	
Copper	13.9	mg/Kg	0.635	5/1/2014 10:55:00 AM	KEB	EPA 6020A	
Lead	9.07	mg/Kg	0.635	5/1/2014 10:55:00 AM	KEB	EPA 6020A	
Mercury-ICPMS	ND	mg/Kg	0.0635	5/1/2014 10:55:00 AM	KEB	EPA 6020A	
Zinc	30.7	mg/Kg	0.635	5/1/2014 10:55:00 AM	KEB	EPA 6020A	
%moisture	26.4	Percent		4/23/2014	BJR	%moisture	

Sample Number	140417045-090	**Sampling Date**	4/16/2014	**Date/Time Received**	4/17/2014 12:00 PM
Client Sample ID	HA-29(9-9.5)	**Sampling Time**	9:48 AM	**Extraction Date**	
Matrix	Soil	**Sample Location**			
Comments					

Parameter	Result	Units	PQL	Analysis Date	Analyst	Method	Qualifier
Cadmium	ND	mg/Kg	0.655	5/1/2014 11:03:00 AM	KEB	EPA 6020A	
Copper	8.25	mg/Kg	0.655	5/1/2014 11:03:00 AM	KEB	EPA 6020A	
Lead	5.52	mg/Kg	0.655	5/1/2014 11:03:00 AM	KEB	EPA 6020A	
Mercury-ICPMS	ND	mg/Kg	0.0655	5/1/2014 11:03:00 AM	KEB	EPA 6020A	
Zinc	23.0	mg/Kg	0.655	5/1/2014 11:03:00 AM	KEB	EPA 6020A	
%moisture	27.4	Percent		4/23/2014	BJR	%moisture	

Preliminary Draft for Agency Review

Certifications held by Anatek Labs ID: EPA:ID00013; AZ:0701; CO:ID00013; FL(NELAP):E87893; ID:ID00013; MT:CERT0028; NM: ID00013; OR:ID200001-002; WA:C595
Certifications held by Anatek Labs WA: EPA:WA00169; ID:WA00169; WA:C585; MT:Cert0095; FL(NELAP): E871099

Anatek Labs, Inc.

1282 Alturas Drive • Moscow, ID 83843 • (208) 883-2839 • Fax (208) 882-9246 • email moscow@anateklabs.com
504 E Sprague Ste. D • Spokane WA 99202 • (509) 838-3999 • Fax (509) 838-4433 • email spokane@anateklabs.com

Client: GEO ENGINEERS
Address: 523 E 2ND
SPOKANE, WA 99202
Attn: SCOTT LATHEN

Batch #: 140417045
Project Name: CLARK FORK RIVER DELTA 15387-014-00

Analytical Results Report

Sample Number	140417045-091	**Sampling Date**	4/16/2014	**Date/Time Received**	4/17/2014 12:00 PM
Client Sample ID	HA-30(1.5-2)	**Sampling Time**	10:42 AM	**Extraction Date**	
Matrix	Soil	**Sample Location**			
Comments					

Parameter	Result	Units	PQL	Analysis Date	Analyst	Method	Qualifier
Cadmium	ND	mg/Kg	0.616	5/1/2014 11:10:00 AM	KEB	EPA 6020A	
Copper	18.4	mg/Kg	0.616	5/1/2014 11:10:00 AM	KEB	EPA 6020A	
Lead	12.0	mg/Kg	0.616	5/1/2014 11:10:00 AM	KEB	EPA 6020A	
Mercury-ICPMS	ND	mg/Kg	0.0616	5/1/2014 11:10:00 AM	KEB	EPA 6020A	
Zinc	49.1	mg/Kg	0.616	5/1/2014 11:10:00 AM	KEB	EPA 6020A	
%moisture	23.7	Percent		4/23/2014	BJR	%moisture	

Sample Number	140417045-092	**Sampling Date**	4/16/2014	**Date/Time Received**	4/17/2014 12:00 PM
Client Sample ID	HA-30(4-4.5)	**Sampling Time**	10:56 AM	**Extraction Date**	
Matrix	Soil	**Sample Location**			
Comments					

Parameter	Result	Units	PQL	Analysis Date	Analyst	Method	Qualifier
Cadmium	ND	mg/Kg	0.675	5/1/2014 11:17:00 AM	KEB	EPA 6020A	
Copper	17.1	mg/Kg	0.675	5/1/2014 11:17:00 AM	KEB	EPA 6020A	
Lead	9.75	mg/Kg	0.675	5/1/2014 11:17:00 AM	KEB	EPA 6020A	
Mercury-ICPMS	ND	mg/Kg	0.0675	5/1/2014 11:17:00 AM	KEB	EPA 6020A	
Zinc	40.1	mg/Kg	0.675	5/1/2014 11:17:00 AM	KEB	EPA 6020A	
%moisture	28.1	Percent		4/23/2014	BJR	%moisture	

Preliminary Draft for Agency Review

Anatek Labs, Inc.

1282 Alturas Drive • Moscow, ID 83843 • (208) 883-2839 • Fax (208) 882-9246 • email moscow@anateklabs.com
504 E Sprague Ste. D • Spokane WA 99202 • (509) 838-3999 • Fax (509) 838-4433 • email spokane@anateklabs.com

Client: GEO ENGINEERS
Address: 523 E 2ND
SPOKANE, WA 99202
Attn: SCOTT LATHEN

Batch #: 140417045
Project Name: CLARK FORK RIVER DELTA 15387-014-00

Analytical Results Report

Sample Number	140417045-093	**Sampling Date**	4/16/2014	**Date/Time Received**	4/17/2014 12:00 PM
Client Sample ID	HA-30(6.5-7)	**Sampling Time**	11:05 AM	**Extraction Date**	
Matrix	Soil	**Sample Location**			
Comments					

Parameter	Result	Units	PQL	Analysis Date	Analyst	Method	Qualifier
Cadmium	ND	mg/Kg	0.687	5/1/2014 11:25:00 AM	KEB	EPA 6020A	
Copper	16.6	mg/Kg	0.687	5/1/2014 11:25:00 AM	KEB	EPA 6020A	
Lead	9.32	mg/Kg	0.687	5/1/2014 11:25:00 AM	KEB	EPA 6020A	
Mercury-ICPMS	ND	mg/Kg	0.0687	5/1/2014 11:25:00 AM	KEB	EPA 6020A	
Zinc	35.9	mg/Kg	0.687	5/1/2014 11:25:00 AM	KEB	EPA 6020A	
%moisture	29.7	Percent		4/23/2014	BJR	%moisture	

Sample Number	140417045-094	**Sampling Date**	4/16/2014	**Date/Time Received**	4/17/2014 12:00 PM
Client Sample ID	HA-31(1.5-2)	**Sampling Time**	10:15 AM	**Extraction Date**	
Matrix	Soil	**Sample Location**			
Comments					

Parameter	Result	Units	PQL	Analysis Date	Analyst	Method	Qualifier
Cadmium	ND	mg/Kg	0.635	5/1/2014 5:36:00 PM	KEB	EPA 6020A	
Copper	14.7	mg/Kg	0.635	5/1/2014 5:36:00 PM	KEB	EPA 6020A	
Lead	8.69	mg/Kg	0.635	5/1/2014 5:36:00 PM	KEB	EPA 6020A	
Mercury-ICPMS	ND	mg/Kg	0.0635	5/1/2014 5:36:00 PM	KEB	EPA 6020A	
Zinc	31.1	mg/Kg	0.635	5/1/2014 5:36:00 PM	KEB	EPA 6020A	
%moisture	21.6	Percent		4/23/2014	BJR	%moisture	

Preliminary Draft for Agency Review

Anatek Labs, Inc.

1282 Alturas Drive • Moscow, ID 83843 • (208) 883-2839 • Fax (208) 882-9246 • email moscow@anateklabs.com
504 E Sprague Ste. D • Spokane WA 99202 • (509) 838-3999 • Fax (509) 838-4433 • email spokane@anateklabs.com

Client: GEO ENGINEERS
Address: 523 E 2ND
SPOKANE, WA 99202
Attn: SCOTT LATHEN

Batch #: 140417045
Project Name: CLARK FORK RIVER DELTA 15387-014-00

Analytical Results Report

Sample Number	140417045-095	**Sampling Date**	4/16/2014	**Date/Time Received**	4/17/2014 12:00 PM
Client Sample ID	HA-31(2-2.5)	**Sampling Time**	10:27 AM	**Extraction Date**	
Matrix	Soil	**Sample Location**			
Comments					

Parameter	Result	Units	PQL	Analysis Date	Analyst	Method	Qualifier
Cadmium	ND	mg/Kg	0.697	5/1/2014 6:20:00 PM	KEB	EPA 6020A	
Copper	17.7	mg/Kg	0.697	5/1/2014 6:20:00 PM	KEB	EPA 6020A	
Lead	10.5	mg/Kg	0.697	5/1/2014 6:20:00 PM	KEB	EPA 6020A	
Mercury-ICPMS	ND	mg/Kg	0.0697	5/1/2014 6:20:00 PM	KEB	EPA 6020A	
Zinc	37.5	mg/Kg	0.697	5/1/2014 6:20:00 PM	KEB	EPA 6020A	
%moisture	28	Percent		4/23/2014	BJR	%moisture	

Sample Number	140417045-096	**Sampling Date**	4/16/2014	**Date/Time Received**	4/17/2014 12:00 PM
Client Sample ID	HA-31(4.5-5)	**Sampling Time**	10:19 AM	**Extraction Date**	
Matrix	Soil	**Sample Location**			
Comments					

Parameter	Result	Units	PQL	Analysis Date	Analyst	Method	Qualifier
Cadmium	ND	mg/Kg	0.695	5/1/2014 6:27:00 PM	KEB	EPA 6020A	
Copper	19.1	mg/Kg	0.695	5/1/2014 6:27:00 PM	KEB	EPA 6020A	
Lead	9.90	mg/Kg	0.695	5/1/2014 6:27:00 PM	KEB	EPA 6020A	
Mercury-ICPMS	ND	mg/Kg	0.0695	5/1/2014 6:27:00 PM	KEB	EPA 6020A	
Zinc	38.8	mg/Kg	0.698	5/1/2014 6:27:00 PM	KEB	EPA 6020A	
%moisture	28.8	Percent		4/23/2014	BJR	%moisture	

Preliminary Draft for Agency Review

Anatek Labs, Inc.

1282 Alturas Drive • Moscow, ID 83843 • (208) 883-2839 • Fax (208) 882-9246 • email moscow@anateklabs.com
504 E Sprague Ste. D • Spokane WA 99202 • (509) 838-3999 • Fax (509) 838-4433 • email spokane@anateklabs.com

Client: GEO ENGINEERS
Address: 523 E 2ND
SPOKANE, WA 99202
Attn: SCOTT LATHEN

Batch #: 140417045
Project Name: CLARK FORK RIVER DELTA 15387-014-00

Analytical Results Report

Sample Number	140417045-097	**Sampling Date**	4/16/2014	**Date/Time Received**	4/17/2014 12:00 PM
Client Sample ID	HA-32(1.5-2)	**Sampling Time**	8:50 AM	**Extraction Date**	
Matrix	Soil	**Sample Location**			
Comments					

Parameter	Result	Units	PQL	Analysis Date	Analyst	Method	Qualifier
Cadmium	1.12	mg/Kg	0.746	5/1/2014 6:34:00 PM	KEB	EPA 6020A	
Copper	98.1	mg/Kg	0.746	5/1/2014 6:34:00 PM	KEB	EPA 6020A	
Lead	27.4	mg/Kg	0.746	5/1/2014 6:34:00 PM	KEB	EPA 6020A	
Mercury-ICPMS	0.197	mg/Kg	0.0746	5/1/2014 6:34:00 PM	KEB	EPA 6020A	
Zinc	194	mg/Kg	0.746	5/1/2014 6:34:00 PM	KEB	EPA 6020A	
%moisture	35.9	Percent		4/23/2014	BJR	%moisture	

Sample Number	140417045-098	**Sampling Date**	4/16/2014	**Date/Time Received**	4/17/2014 12:00 PM
Client Sample ID	HA-32(4.5-5)	**Sampling Time**	8:57 AM	**Extraction Date**	
Matrix	Soil	**Sample Location**			
Comments					

Parameter	Result	Units	PQL	Analysis Date	Analyst	Method	Qualifier
Cadmium	2.11	mg/kg	0.705	5/1/2014 6:41:00 PM	KEB	EPA 6020A	
Copper	425	mg/Kg	0.705	5/1/2014 6:41:00 PM	KEB	EPA 6020A	
Lead	97.4	mg/Kg	0.705	5/1/2014 6:41:00 PM	KEB	EPA 6020A	
Mercury-ICPMS	0.627	mg/Kg	0.0705	5/1/2014 6:41:00 PM	KEB	EPA 6020A	
Zinc	442	mg/Kg	0.705	5/1/2014 6:41:00 PM	KEB	EPA 6020A	
%moisture	31.1	Percent		4/23/2014	BJR	%moisture	

Preliminary Draft for Agency Review

Anatek Labs, Inc.

1282 Alturas Drive • Moscow, ID 83843 • (208) 883-2839 • Fax (208) 882-9246 • email moscow@anateklabs.com
504 E Sprague Ste. D • Spokane WA 99202 • (509) 838-3999 • Fax (509) 838-4433 • email spokane@anateklabs.com

Client: GEO ENGINEERS
Address: 523 E 2ND
SPOKANE, WA 99202
Attn: SCOTT LATHEN

Batch #: 140417045
Project Name: CLARK FORK RIVER DELTA 15387-014-00

Analytical Results Report

Sample Number	140417045-099	**Sampling Date**	4/16/2014	**Date/Time Received**	4/17/2014 12:00 PM
Client Sample ID	HA-32(6.5-7)	**Sampling Time**	9:07 AM	**Extraction Date**	
Matrix	Soil	**Sample Location**			
Comments					

Parameter	Result	Units	PQL	Analysis Date	Analyst	Method	Qualifier
Cadmium	ND	mg/Kg	0.661	5/1/2014 6:49:00 PM	KEB	EPA 6020A	
Copper	15.2	mg/Kg	0.661	5/1/2014 6:49:00 PM	KEB	EPA 6020A	
Lead	8.88	mg/Kg	0.661	5/1/2014 6:49:00 PM	KEB	EPA 6020A	
Mercury-ICPMS	ND	mg/Kg	0.0661	5/1/2014 6:49:00 PM	KEB	EPA 6020A	
Zinc	33.1	mg/Kg	0.661	5/1/2014 6:49:00 PM	KEB	EPA 6020A	
%moisture	24.8	Percent		4/23/2014	BJR	%moisture	

Sample Number	140417045-100	**Sampling Date**	4/16/2014	**Date/Time Received**	4/17/2014 12:00 PM
Client Sample ID	HA-32(9-9.5)	**Sampling Time**	9:15 AM	**Extraction Date**	
Matrix	Soil	**Sample Location**			
Comments					

Parameter	Result	Units	PQL	Analysis Date	Analyst	Method	Qualifier
Cadmium	ND	mg/Kg	0.656	5/1/2014 6:56:00 PM	KEB	EPA 6020A	
Copper	17.7	mg/Kg	0.656	5/1/2014 6:56:00 PM	KEB	EPA 6020A	
Lead	10.7	mg/Kg	0.656	5/1/2014 6:56:00 PM	KEB	EPA 6020A	
Mercury-ICPMS	ND	mg/Kg	0.0656	5/1/2014 6:56:00 PM	KEB	EPA 6020A	
Zinc	40.7	mg/Kg	0.656	5/1/2014 6:56:00 PM	KEB	EPA 6020A	
%moisture	25.6	Percent		4/23/2014	BJR	%moisture	

Preliminary Draft for Agency Review

Anatek Labs, Inc.

1282 Alturas Drive • Moscow, ID 83843 • (208) 883-2839 • Fax (208) 882-9246 • email moscow@anateklabs.com
504 E Sprague Ste. D • Spokane WA 99202 • (509) 838-3999 • Fax (509) 838-4433 • email spokane@anateklabs.com

Client: GEO ENGINEERS
Address: 523 E 2ND
SPOKANE, WA 99202
Attn: SCOTT LATHEN

Batch #: 140417045
Project Name: CLARK FORK RIVER DELTA 15387-014-00

Analytical Results Report

Sample Number	140417045-101	**Sampling Date**	4/16/2014	**Date/Time Received**	4/17/2014 12:00 PM
Client Sample ID	HA-33(2-2.5)	**Sampling Time**	8:23 AM	**Extraction Date**	
Matrix	Soil	**Sample Location**			
Comments					

Parameter	Result	Units	PQL	Analysis Date	Analyst	Method	Qualifier
Cadmium	1.97	mg/Kg	0.698	5/1/2014 5:27:00 PM	KEB	EPA 6020A	
Copper	238	mg/Kg	0.698	5/1/2014 5:27:00 PM	KEB	EPA 6020A	
Lead	56.2	mg/Kg	0.698	5/1/2014 5:27:00 PM	KEB	EPA 6020A	
Mercury-ICPMS	0.303	mg/Kg	0.0698	5/1/2014 5:27:00 PM	KEB	EPA 6020A	
Zinc	497	mg/Kg	0.698	5/1/2014 5:27:00 PM	KEB	EPA 6020A	
%moisture	28.8	Percent		4/23/2014	BJR	%moisture	

Sample Number	140417045-102	**Sampling Date**	4/16/2014	**Date/Time Received**	4/17/2014 12:00 PM
Client Sample ID	HA-33(4-4.5)	**Sampling Time**	8:28 AM	**Extraction Date**	
Matrix	Soil	**Sample Location**			
Comments					

Parameter	Result	Units	PQL	Analysis Date	Analyst	Method	Qualifier
Cadmium	ND	mg/Kg	0.624	5/1/2014 7:03:00 PM	KEB	EPA 6020A	
Copper	21.8	mg/Kg	0.624	5/1/2014 7:03:00 PM	KEB	EPA 6020A	
Lead	12.9	mg/Kg	0.624	5/1/2014 7:03:00 PM	KEB	EPA 6020A	
Mercury-ICPMS	ND	mg/Kg	0.0624	5/1/2014 7:03:00 PM	KEB	EPA 6020A	
Zinc	54.1	mg/Kg	0.624	5/1/2014 7:03:00 PM	KEB	EPA 6020A	
%moisture	22.9	Percent		4/23/2014	BJR	%moisture	

Preliminary Draft for Agency Review

Anatek Labs, Inc.

1282 Alturas Drive • Moscow, ID 83843 • (208) 883-2839 • Fax (208) 882-9246 • email moscow@anateklabs.com
504 E Sprague Ste. D • Spokane WA 99202 • (509) 838-3999 • Fax (509) 838-4433 • email spokane@anateklabs.com

Client: GEO ENGINEERS
Address: 523 E 2ND
SPOKANE, WA 99202
Attn: SCOTT LATHEN

Batch #: 140417045
Project Name: CLARK FORK RIVER DELTA 15387-014-00

Analytical Results Report

Sample Number	140417045-103	**Sampling Date**	4/16/2014	**Date/Time Received**	4/17/2014 12:00 PM
Client Sample ID	HA-33(6.5-7)	**Sampling Time**	8:36 AM	**Extraction Date**	
Matrix	Soil	**Sample Location**			
Comments					

Parameter	Result	Units	PQL	Analysis Date	Analyst	Method	Qualifier
Cadmium	ND	mg/Kg	0.663	5/1/2014 7:11:00 PM	KEB	EPA 6020A	
Copper	12.0	mg/Kg	0.663	5/1/2014 7:11:00 PM	KEB	EPA 6020A	
Lead	7.67	mg/Kg	0.663	5/1/2014 7:11:00 PM	KEB	EPA 6020A	
Mercury-ICPMS	ND	mg/Kg	0.0663	5/1/2014 7:11:00 PM	KEB	EPA 6020A	
Zinc	26.6	mg/Kg	0.663	5/1/2014 7:11:00 PM	KEB	EPA 6020A	
%moisture	27.4	Percent		4/23/2014	BJR	%moisture	

Sample Number	140417045-104	**Sampling Date**	4/15/2014	**Date/Time Received**	4/17/2014 12:00 PM
Client Sample ID	RINSEATE BLANK 1	**Sampling Time**	5:05 PM	**Extraction Date**	
Matrix	Water	**Sample Location**			
Comments					

Parameter	Result	Units	PQL	Analysis Date	Analyst	Method	Qualifier
Cadmium	ND	mg/L	0.001	4/29/2014 4:01:00 PM	KEB	EPA 200.8	
Copper	ND	mg/L	0.001	4/29/2014 4:01:00 PM	KEB	EPA 200.8	
Lead	ND	mg/L	0.001	4/29/2014 4:01:00 PM	KEB	EPA 200.8	
Mercury-ICPMS	ND	mg/L	0.0001	4/29/2014 4:01:00 PM	KEB	EPA 200.8	
Zinc	0.0120	mg/L	0.001	4/29/2014 4:01:00 PM	KEB	EPA 200.8	

Preliminary Draft for Agency Review

Anatek Labs, Inc.

1282 Alturas Drive • Moscow, ID 83843 • (208) 883-2839 • Fax (208) 882-9246 • email moscow@anateklabs.com
504 E Sprague Ste. D • Spokane WA 99202 • (509) 838-3999 • Fax (509) 838-4433 • email spokane@anateklabs.com

Client: GEO ENGINEERS
Address: 523 E 2ND
SPOKANE, WA 99202
Attn: SCOTT LATHEN

Batch #: 140417045
Project Name: CLARK FORK RIVER DELTA 15387-014-00

Analytical Results Report

Sample Number 140417045-105
Client Sample ID RINSEATE BLANK 2
Matrix Water
Comments

Sampling Date 4/16/2014
Sampling Time 6:05 PM
Sample Location

Date/Time Received 4/17/2014 12:00 PM
Extraction Date

Parameter	Result	Units	PQL	Analysis Date	Analyst	Method	Qualifier
Cadmium	ND	mg/L	0.001	4/29/2014 4:08:00 PM	KEB	EPA 200.8	
Copper	ND	mg/L	0.001	4/29/2014 4:08:00 PM	KEB	EPA 200.8	
Lead	ND	mg/L	0.001	4/29/2014 4:08:00 PM	KEB	EPA 200.8	
Mercury-ICPMS	ND	mg/L	0.0001	4/29/2014 4:08:00 PM	KEB	EPA 200.8	
Zinc	0.00988	mg/L	0.001	4/29/2014 4:08:00 PM	KEB	EPA 200.8	

Sample Number 140417045-108
Client Sample ID FIELD BLANK 1
Matrix Water
Comments

Sampling Date 4/18/2014
Sampling Time 10:44 AM
Sample Location

Date/Time Received 4/17/2014 12:00 PM
Extraction Date

Parameter	Result	Units	PQL	Analysis Date	Analyst	Method	Qualifier
Cadmium	ND	mg/L	0.001	4/29/2014 4:18:00 PM	KEB	EPA 200.8	
Copper	ND	mg/L	0.001	4/29/2014 4:18:00 PM	KEB	EPA 200.8	
Lead	ND	mg/L	0.001	4/29/2014 4:18:00 PM	KEB	EPA 200.8	
Mercury-ICPMS	ND	mg/L	0.0001	4/29/2014 4:18:00 PM	KEB	EPA 200.8	
Zinc	ND	mg/L	0.001	4/29/2014 4:18:00 PM	KEB	EPA 200.8	

Preliminary Draft for Agency Review

Anatek Labs, Inc.

1282 Alturas Drive • Moscow, ID 83843 • (208) 883-2839 • Fax (208) 882-9246 • email moscow@anateklabs.com
504 E Sprague Ste. D • Spokane WA 99202 • (509) 838-3999 • Fax (509) 838-4433 • email spokane@anateklabs.com

Client: GEO ENGINEERS
Address: 523 E 2ND
SPOKANE, WA 99202
Attn: SCOTT LATHEN

Batch #: 140417045
Project Name: CLARK FORK RIVER DELTA 15387-014-00

Analytical Results Report

Sample Number	140417045-109	**Sampling Date**	4/18/2014	**Date/Time Received**	4/17/2014 12:00 PM
Client Sample ID	FIELD BLANK 2	**Sampling Time**	10:44 AM	**Extraction Date**	
Matrix	Water	**Sample Location**			
Comments					

Parameter	Result	Units	PQL	Analysis Date	Analyst	Method	Qualifier
Cadmium	ND	mg/L	0.001	4/29/2014 4:33:00 PM	KEB	EPA 200.8	
Copper	ND	mg/L	0.001	4/29/2014 4:33:00 PM	KEB	EPA 200.8	
Lead	ND	mg/L	0.001	4/29/2014 4:33:00 PM	KEB	EPA 200.8	
Mercury-ICPMS	ND	mg/L	0.0001	4/29/2014 4:33:00 PM	KEB	EPA 200.8	
Zinc	ND	mg/L	0.001	4/29/2014 4:33:00 PM	KEB	EPA 200.8	

Authorized Signature

Kathleen A. Sattler

Kathy Sattler, Lab Manager

MCL EPA's Maximum Contaminant Level
ND Not Detected
PQL Practical Quantitation Limit

This report shall not be reproduced except in full, without the written approval of the laboratory.
The results reported relate only to the samples indicated.
Soil/solid results are reported on a dry-weight basis unless otherwise noted.

Preliminary Draft for Agency Review

Anatek Labs, Inc.

1282 Alturas Drive • Moscow, ID 83843 • (208) 883-2839 • Fax (208) 882-9246 • email moscow@anateklabs.com
504 E Sprague Ste. D • Spokane WA 99202 • (509) 838-3999 • Fax (509) 838-4433 • email spokane@anateklabs.com

Client: GEO ENGINEERS
Address: 523 E 2ND
SPOKANE, WA 99202
Attn: SCOTT LATHEN

Batch #: 140417045
Project Name: CLARK FORK RIVER DELTA 15387-014-00

Analytical Results Report

Quality Control Data

Preliminary Draft for Agency Review

Lab Control Sample

Parameter	LCS Result	Units	LCS Spike	%Rec	AR %Rec	Prep Date	Analysis Date
Lead	0.0485	mg/L	0.05	97.0	85-115	4/23/2014	4/30/2014
Cadmium	0.0410	mg/kg	0.04	102.5	80-120	4/25/2014	4/30/2014
Zinc	0.0386	mg/kg	0.04	96.5	80-120	4/24/2014	4/30/2014
MERCURY-ICPMS	0.00191	mg/kg	0.002	95.5	80-120	4/24/2014	4/30/2014
Lead	0.0353	mg/kg	0.04	88.3	80-120	4/24/2014	4/30/2014
Copper	0.0362	mg/kg	0.04	90.5	80-120	4/24/2014	4/30/2014
Cadmium	0.0382	mg/kg	0.04	95.5	80-120	4/24/2014	4/30/2014
Cadmium	0.0406	mg/kg	0.04	101.5	80-120	4/29/2014	4/28/2014
MERCURY-ICPMS	0.00250	mg/L	0.0025	100.0	85-115	4/23/2014	4/30/2014
MERCURY-ICPMS	0.00198	mg/kg	0.002	99.0	80-120	4/25/2014	4/30/2014
Copper	0.0468	mg/L	0.05	93.6	85-115	4/23/2014	4/30/2014
Cadmium	0.0496	mg/L	0.05	99.2	85-115	4/23/2014	4/30/2014
Zinc	0.0410	mg/kg	0.04	102.5	80-120	4/29/2014	4/28/2014
MERCURY-ICPMS	0.00197	mg/kg	0.002	98.5	80-120	4/29/2014	4/28/2014
Lead	0.0406	mg/kg	0.04	101.5	80-120	4/29/2014	4/28/2014
Copper	0.0395	mg/kg	0.04	98.8	80-120	4/29/2014	4/28/2014
Zinc	0.0564	mg/L	0.05	112.8	85-115	4/23/2014	4/30/2014
Cadmium	0.0403	mg/kg	0.04	100.8	80-120	4/28/2014	4/30/2014
MERCURY-ICPMS	0.00203	mg/kg	0.002	101.5	80-120	4/28/2014	5/1/2014
Lead	0.0409	mg/kg	0.04	102.3	80-120	4/28/2014	5/1/2014
Copper	0.0374	mg/kg	0.04	93.5	80-120	4/28/2014	5/1/2014
Cadmium	0.0408	mg/kg	0.04	102.0	80-120	4/28/2014	5/1/2014
Zinc	0.0413	mg/kg	0.04	103.3	80-120	4/28/2014	4/30/2014
MERCURY-ICPMS	0.00199	mg/kg	0.002	99.5	80-120	4/28/2014	4/30/2014
Copper	0.0367	mg/kg	0.04	91.8	80-120	4/25/2014	4/30/2014
Copper	0.0372	mg/kg	0.04	93.0	80-120	4/28/2014	4/30/2014
Lead	0.0410	mg/kg	0.04	102.5	80-120	4/25/2014	4/30/2014
Zinc	0.0376	mg/kg	0.04	94.0	80-120	4/25/2014	4/30/2014
MERCURY-ICPMS	0.00198	mg/kg	0.002	99.0	80-120	4/25/2014	4/30/2014
Lead	0.0411	mg/kg	0.04	102.8	80-120	4/25/2014	4/30/2014
Copper	0.0367	mg/kg	0.04	91.8	80-120	4/25/2014	4/30/2014
Cadmium	0.0392	mg/kg	0.04	98.0	80-120	4/25/2014	4/30/2014
Zinc	0.0384	mg/kg	0.04	96.0	80-120	4/25/2014	4/30/2014
Zinc	0.0392	mg/kg	0.04	98.0	80-120	4/28/2014	5/1/2014
Lead	0.0418	mg/kg	0.04	104.5	80-120	4/28/2014	4/30/2014

Comments:

Certifications held by Anatek Labs ID: EPA:ID00013; AZ:0701; CO:ID00013; FL(NELAP):E87893; ID:ID00013; MT:CERT0028; NM: ID00013; OR:ID200001-002; WA:C595
Certifications held by Anatek Labs WA: EPA:WA00169; ID:WA00169; WA:C585; MT:Cert0095; FL(NELAP): E871099

Anatek Labs, Inc.

1282 Alturas Drive • Moscow, ID 83843 • (208) 883-2839 • Fax (208) 882-9246 • email moscow@anateklabs.com
504 E Sprague Ste. D • Spokane WA 99202 • (509) 838-3999 • Fax (509) 838-4433 • email spokane@anateklabs.com

Client: GEO ENGINEERS
Address: 523 E 2ND
SPOKANE, WA 99202
Attn: SCOTT LATHEN

Batch #: 140417045
Project Name: CLARK FORK RIVER DELTA 15387-014-00

Analytical Results Report

Quality Control Data

Preliminary Draft for Agency Review

Matrix Spike

Sample Number	Parameter	Sample Result	MS Result	Units	MS Spike	%Rec	AR %Rec	Prep Date	Analysis Date
140417059-001A	Copper	0.00620	0.0472	mg/L	0.05	82.0	70-130	4/23/2014	4/30/2014
140417045-001	Lead	34.9	67.7	mg/kg	28.2	116.3	75-125	4/29/2014	4/28/2014
140417059-001A	Lead	ND	0.0438	mg/L	0.05	87.6	70-130	4/23/2014	4/30/2014
140417045-052	Copper	25.6	47.7	mg/kg	27.2	81.3	75-125	4/28/2014	5/1/2014
140417045-081	Copper	26.4	49.9	mg/kg	28.6	82.2	75-125	4/28/2014	4/30/2014
140417045-061	Copper	18.1	38.7	mg/kg	25.2	81.7	75-125	4/25/2014	4/30/2014
140417045-041	Copper	22.4	45.0	mg/kg	25.9	87.3	75-125	4/25/2014	4/30/2014
140417059-001A	Cadmium	ND	0.0452	mg/L	0.05	90.4	70-130	4/23/2014	4/30/2014
140417045-001	Copper	70.7	99.5	mg/kg	28.2	102.1	75-125	4/29/2014	4/28/2014
140417045-061	Lead	11.1	33.9	mg/kg	25.2	90.5	75-125	4/25/2014	4/30/2014
140417045-052	Cadmium	ND	25.6	mg/kg	27.2	94.1	75-125	4/28/2014	5/1/2014
140417045-081	Cadmium	ND	26.7	mg/kg	28.6	93.4	75-125	4/28/2014	4/30/2014
140417045-061	Cadmium	ND	22.6	mg/kg	25.2	89.7	75-125	4/25/2014	4/30/2014
140417045-041	Cadmium	ND	24.7	mg/kg	25.9	95.4	75-125	4/25/2014	4/30/2014
140417045-021	Cadmium	ND	27.4	mg/kg	27.2	100.7	75-125	4/24/2014	4/30/2014
140417045-001	Cadmium	0.213	29.7	mg/kg	28.2	104.6	75-125	4/29/2014	4/28/2014
140417045-021	Copper	20.8	49.1	mg/kg	27.2	104.0	75-125	4/24/2014	4/30/2014
140417045-061	MERCURY-ICPMS	ND	1.13	mg/kg	1.26	89.7	75-125	4/25/2014	4/30/2014
140417045-081	Zinc	59.1	82.1	mg/kg	28.6	80.4	75-125	4/28/2014	4/30/2014
140417045-061	Zinc	42.5	66.7	mg/kg	25.2	96.0	75-125	4/25/2014	4/30/2014
140417045-041	Zinc	51.9	76.3	mg/kg	25.9	94.2	75-125	4/25/2014	4/30/2014
140417045-021	Zinc	47.4	79.7	mg/kg	27.2	118.8	75-125	4/24/2014	4/30/2014
140417045-001	Zinc	66.3	99.0	mg/kg	28.2	116.0	75-125	4/29/2014	4/28/2014
140417059-001A	Zinc	0.0414	0.0845	mg/L	0.05	86.2	70-130	4/23/2014	4/30/2014
140417045-021	Lead	9.93	37.1	mg/kg	27.2	99.9	75-125	4/24/2014	4/30/2014
140417045-081	MERCURY-ICPMS	ND	1.30	mg/kg	1.43	90.9	75-125	4/28/2014	4/30/2014
140417045-041	Lead	12.1	36.9	mg/kg	25.9	95.8	75-125	4/25/2014	4/30/2014
140417045-041	MERCURY-ICPMS	ND	1.36	mg/kg	1.3	104.6	75-125	4/25/2014	4/30/2014
140417045-021	MERCURY-ICPMS	ND	1.49	mg/kg	1.36	109.6	75-125	4/24/2014	4/30/2014
140417045-001	MERCURY-ICPMS	0.177	1.56	mg/kg	1.41	98.1	75-125	4/29/2014	4/28/2014
140417059-001A	MERCURY-ICPMS	ND	0.00234	mg/L	0.003	93.6	70-130	4/23/2014	4/30/2014
140417045-052	Lead	14.8	39.0	mg/kg	27.2	89.0	75-125	4/28/2014	5/1/2014
140417045-081	Lead	13.7	40.6	mg/kg	28.6	94.1	75-125	4/28/2014	4/30/2014
140417045-052	Zinc	46.8	80.4	mg/kg	27.2	123.5	75-125	4/28/2014	5/1/2014
140417045-052	MERCURY-ICPMS	ND	1.22	mg/kg	1.36	89.7	75-125	4/28/2014	5/1/2014

Comments:

Certifications held by Anatek Labs ID: EPA:ID00013; AZ:0701; CO:ID00013; FL(NELAP):E87893; ID:ID00013; MT:CERT0028; NM: ID00013; OR:ID200001-002; WA:C595
Certifications held by Anatek Labs WA: EPA:WA00169; ID:WA00169; WA:C585; MT:Cert0095; FL(NELAP): E871099

Anatek Labs, Inc.

1282 Alturas Drive • Moscow, ID 83843 • (208) 883-2839 • Fax (208) 882-9246 • email moscow@anateklabs.com
504 E Sprague Ste. D • Spokane WA 99202 • (509) 838-3999 • Fax (509) 838-4433 • email spokane@anateklabs.com

Client: GEO ENGINEERS
Address: 523 E 2ND
SPOKANE, WA 99202
Attn: SCOTT LATHEN

Batch #: 140417045
Project Name: CLARK FORK RIVER DELTA 15387-014-00

Analytical Results Report

Quality Control Data

Matrix Spike Duplicate

Parameter	MSD Result	Units	MSD Spike	%Rec	%RPD	AR %RPD	Prep Date	Analysis Date
Copper	0.0463	mg/L	0.05	80.2	1.9	0-20	4/23/2014	4/30/2014
Lead	68.3	mg/kg	28.2	118.4	0.9	0-20	4/29/2014	4/28/2014
Lead	0.0450	mg/L	0.05	90.0	2.7	0-20	4/23/2014	4/30/2014
Copper	47.8	mg/kg	27.2	81.6	0.2	0-20	4/28/2014	5/1/2014
Copper	50.3	mg/kg	28.6	83.6	0.8	0-20	4/28/2014	4/30/2014
Copper	39.3	mg/kg	25.2	84.1	1.5	0-20	4/25/2014	4/30/2014
Copper	48.6	mg/kg	25.9	101.2	7.7	0-20	4/25/2014	4/30/2014
Cadmium	0.0458	mg/L	0.05	91.6	1.3	0-20	4/23/2014	4/30/2014
Copper	99.1	mg/kg	28.2	100.7	0.4	0-20	4/29/2014	4/28/2014
Lead	34.6	mg/kg	25.2	93.3	2.0	0-20	4/25/2014	4/30/2014
Cadmium	27.7	mg/kg	27.2	101.8	7.9	0-20	4/28/2014	5/1/2014
Cadmium	26.6	mg/kg	28.6	93.0	0.4	0-20	4/28/2014	4/30/2014
Cadmium	23.4	mg/kg	25.2	92.9	3.5	0-20	4/25/2014	4/30/2014
Cadmium	25.8	mg/kg	25.9	99.6	4.4	0-20	4/25/2014	4/30/2014
Cadmium	28.3	mg/kg	27.2	104.0	3.2	0-20	4/24/2014	4/30/2014
Cadmium	29.9	mg/kg	28.2	105.3	0.7	0-20	4/29/2014	4/28/2014
Copper	48.1	mg/kg	27.2	100.4	2.1	0-20	4/24/2014	4/30/2014
MERCURY-ICPMS	1.23	mg/kg	1.26	97.6	8.5	0-20	4/25/2014	4/30/2014
Zinc	82.9	mg/kg	28.6	83.2	1.0	0-20	4/28/2014	4/30/2014
Zinc	70.2	mg/kg	25.2	109.9	5.1	0-20	4/25/2014	4/30/2014
Zinc	81.7	mg/kg	25.9	115.1	6.8	0-20	4/25/2014	4/30/2014
Zinc	79.4	mg/kg	27.2	117.6	0.4	0-20	4/24/2014	4/30/2014
Zinc	99.5	mg/kg	28.2	117.7	0.5	0-20	4/29/2014	4/28/2014
Zinc	0.0796	mg/L	0.05	76.4	6.0	0-20	4/23/2014	4/30/2014
Lead	37.7	mg/kg	27.2	102.1	1.6	0-20	4/24/2014	4/30/2014
MERCURY-ICPMS	1.33	mg/kg	1.43	93.0	2.3	0-20	4/28/2014	4/30/2014
Lead	37.6	mg/kg	25.9	98.5	1.9	0-20	4/25/2014	4/30/2014
MERCURY-ICPMS	1.25	mg/kg	1.3	96.2	8.4	0-20	4/25/2014	4/30/2014
MERCURY-ICPMS	1.51	mg/kg	1.36	111.0	1.3	0-20	4/24/2014	4/30/2014
MERCURY-ICPMS	1.68	mg/kg	1.41	106.6	7.4	0-20	4/29/2014	4/28/2014
MERCURY-ICPMS	0.00229	mg/L	0.0025	91.6	2.2	0-20	4/23/2014	4/30/2014
Lead	39.8	mg/kg	27.2	91.9	2.0	0-20	4/28/2014	5/1/2014
Lead	40.6	mg/kg	28.6	94.1	0.0	0-20	4/28/2014	4/30/2014
Zinc	73.2	mg/kg	27.2	97.1	9.4	0-20	4/28/2014	5/1/2014
MERCURY-ICPMS	1.33	mg/kg	1.36	97.8	8.6	0-20	4/28/2014	5/1/2014

Method Blank

Comments:

Certifications held by Anatek Labs ID: EPA:ID00013; AZ:0701; CO:ID00013; FL(NELAP):E87893; ID:ID00013; MT:CERT0028; NM: ID00013; OR:ID200001-002; WA:C595
Certifications held by Anatek Labs WA: EPA:WA00169; ID:WA00169; WA:C585; MT:Cert0095; FL(NELAP): E871099

Preliminary Draft for Agency Review

Anatek Labs, Inc.

1282 Alturas Drive • Moscow, ID 83843 • (208) 883-2839 • Fax (208) 882-9246 • email moscow@anateklabs.com
504 E Sprague Ste. D • Spokane WA 99202 • (509) 838-3999 • Fax (509) 838-4433 • email spokane@anateklabs.com

Client: GEO ENGINEERS
Address: 523 E 2ND
SPOKANE, WA 99202
Attn: SCOTT LATHEN

Batch #: 140417045
Project Name: CLARK FORK RIVER DELTA 15387-014-00

Analytical Results Report

Quality Control Data

Parameter	Result	Units	PQL	Prep Date	Analysis Date
Cadmium	ND	mg/L	0.001	4/23/2014	4/30/2014
Cadmium	ND	mg/Kg	0.001	4/24/2014	4/30/2014
Cadmium	ND	mg/Kg	0.001	4/25/2014	4/30/2014
Cadmium	ND	mg/Kg	0.001	4/25/2014	4/30/2014
Cadmium	ND	mg/Kg	0.001	4/28/2014	4/30/2014
Cadmium	ND	mg/Kg	0.001	4/28/2014	5/1/2014
Cadmium	ND	mg/Kg	0.001	4/29/2014	4/28/2014
Copper	ND	mg/Kg	0.001	4/29/2014	4/28/2014
Copper	ND	mg/Kg	0.001	4/28/2014	5/1/2014
Copper	ND	mg/Kg	0.001	4/28/2014	4/30/2014
Copper	ND	mg/Kg	0.001	4/25/2014	4/30/2014
Copper	ND	mg/Kg	0.001	4/25/2014	4/30/2014
Copper	ND	mg/L	0.001	4/23/2014	4/30/2014
Copper	ND	mg/Kg	0.001	4/24/2014	4/30/2014
Lead	ND	mg/Kg	0.001	4/25/2014	4/30/2014
Lead	ND	mg/Kg	0.001	4/29/2014	4/28/2014
Lead	ND	mg/L	0.001	4/23/2014	4/30/2014
Lead	ND	mg/Kg	0.001	4/24/2014	4/30/2014
Lead	ND	mg/Kg	0.001	4/28/2014	4/30/2014
Lead	ND	mg/Kg	0.001	4/28/2014	5/1/2014
Lead	ND	mg/Kg	0.001	4/25/2014	4/30/2014
Mercury-ICPMS	ND	mg/Kg	0.0001	4/25/2014	4/30/2014
Mercury-ICPMS	ND	mg/Kg	0.0001	4/28/2014	4/30/2014
Mercury-ICPMS	ND	mg/Kg	0.0001	4/25/2014	4/30/2014
Mercury-ICPMS	ND	mg/Kg	0.0001	4/24/2014	4/30/2014
Mercury-ICPMS	ND	mg/L	0.0001	4/23/2014	4/30/2014
Mercury-ICPMS	ND	mg/Kg	0.0001	4/29/2014	4/28/2014
Mercury-ICPMS	ND	mg/Kg	0.0001	4/28/2014	5/1/2014
Zinc	ND	mg/Kg	0.001	4/28/2014	5/1/2014
Zinc	ND	mg/Kg	0.001	4/29/2014	4/28/2014
Zinc	ND	mg/L	0.001	4/23/2014	4/30/2014
Zinc	ND	mg/Kg	0.001	4/24/2014	4/30/2014
Zinc	ND	mg/Kg	0.001	4/25/2014	4/30/2014
Zinc	ND	mg/Kg	0.001	4/25/2014	4/30/2014
Zinc	ND	mg/Kg	0.001	4/28/2014	4/30/2014

Duplicate

Sample Numbe	Parameter	Sample Result	Duplicate Result	Units	%RPD	AR %RPD	Prep Date	Analysis Date

Comments:

Certifications held by Anatek Labs ID: EPA:ID00013; AZ:0701; CO:ID00013; FL(NELAP):E87893; ID:ID00013; MT:CERT0028; NM: ID00013; OR:ID200001-002; WA:C595
Certifications held by Anatek Labs WA: EPA:WA00169; ID:WA00169; WA:C585; MT:Cert0095; FL(NELAP): E871099

Preliminary Draft for Agency Review

Anatek Labs, Inc.

1282 Alturas Drive • Moscow, ID 83843 • (208) 883-2839 • Fax (208) 882-9246 • email moscow@anateklabs.com
504 E Sprague Ste. D • Spokane WA 99202 • (509) 838-3999 • Fax (509) 838-4433 • email spokane@anateklabs.com

Client: GEO ENGINEERS
Address: 523 E 2ND
SPOKANE, WA 99202
Attn: SCOTT LATHEN

Batch #: 140417045
Project Name: CLARK FORK RIVER DELTA 15387-014-00

Analytical Results Report

Quality Control Data

Preliminary Draft for Agency Review

Duplicate

Sample Numbe	Parameter	Sample Result	Duplicate Result	Units	%RPD	AR %RPD	Prep Date	Analysis Date
140417045-065	Lead	12.0	12.3	mg/Kg	2.5	0-20	4/25/2014	4/30/2014
140417045-024	Cadmium	ND	ND	mg/Kg	0.0	0-20	4/24/2014	4/30/2014
140417045-045	Cadmium	ND	ND	mg/Kg	0.0	0-20	4/25/2014	4/30/2014
140417045-065	Cadmium		ND	mg/Kg	0.0	0-20	4/25/2014	4/30/2014
140417045-085	Cadmium	ND	ND	mg/Kg	0.0	0-20	4/28/2014	4/30/2014
140417045-103	Cadmium	ND	ND	mg/Kg	0.0	0-20	4/28/2014	5/1/2014
140417045-008	Copper	10.5	11.0	mg/Kg	4.7	0-20	4/29/2014	4/28/2014
140417045-024	Copper	23.9	21.1	mg/Kg	12.4	0-20	4/24/2014	4/30/2014
140417045-045	Copper	15.0	14.7	mg/Kg	2.0	0-20	4/25/2014	4/30/2014
140417045-065	Copper	19.9	21.3	mg/Kg	6.8	0-20	4/25/2014	4/30/2014
140417045-085	Copper	15.5	14.1	mg/Kg	9.5	0-20	4/28/2014	4/30/2014
140417045-103	Copper	12.0	11.0	mg/Kg	8.7	0-20	4/28/2014	5/1/2014
140417045-008	Lead	6.15	6.24	mg/Kg	1.5	0-20	4/29/2014	4/28/2014
140417045-008	Cadmium	ND	ND	mg/Kg	0.0	0-20	4/29/2014	4/28/2014
140417045-045	Lead	12.0	11.7	mg/Kg	2.5	0-20	4/25/2014	4/30/2014
140417045-103	Zinc	26.6	25.1	mg/Kg	5.8	0-20	4/28/2014	5/1/2014
140417045-085	Lead	9.41	8.97	mg/Kg	4.8	0-20	4/28/2014	4/30/2014
140417045-103	Lead	7.67	7.10	mg/Kg	7.7	0-20	4/28/2014	5/1/2014
140417045-008	Mercury-ICPMS	ND	ND	mg/Kg	0.0	0-20	4/29/2014	4/28/2014
140417045-024	Mercury-ICPMS	ND	ND	mg/Kg	0.0	0-20	4/24/2014	4/30/2014
140417045-045	Mercury-ICPMS	ND	ND	mg/Kg	0.0	0-20	4/25/2014	4/30/2014
140417045-065	Mercury-ICPMS	ND	0	mg/Kg	0.0	0-20	4/25/2014	4/30/2014
140417045-085	Mercury-ICPMS	ND	ND	mg/Kg	0.0	0-20	4/28/2014	4/30/2014
140417045-103	Mercury-ICPMS	ND	ND	mg/Kg	0.0	0-20	4/28/2014	5/1/2014
140417045-008	Zinc	27.2	27.5	mg/Kg	1.1	0-20	4/29/2014	4/28/2014
140417045-024	Zinc	50.5	51.8	mg/Kg	2.5	0-20	4/24/2014	4/30/2014
140417045-045	Zinc	42.7	41.6	mg/Kg	2.6	0-20	4/25/2014	4/30/2014
140417045-065	Zinc	37.8	40.8	mg/Kg	7.6	0-20	4/25/2014	4/30/2014
140417045-085	Zinc	32.2	31.5	mg/Kg	2.2	0-20	4/28/2014	4/30/2014
140417045-024	Lead	14.7	12.7	mg/Kg	14.6	0-20	4/24/2014	4/30/2014

AR Acceptable Range
ND Not Detected
PQL Practical Quantitation Limit
RPD Relative Percentage Difference

Comments:

Certifications held by Anatek Labs ID: EPA:ID00013; AZ:0701; CO:ID00013; FL(NELAP):E87893; ID:ID00013; MT:CERT0028; NM: ID00013; OR:ID200001-002; WA:C595
Certifications held by Anatek Labs WA: EPA:WA00169; ID:WA00169; WA:C585; MT:Cert0095; FL(NELAP): E871099

Anatek Labs, Inc.

1282 Alturas Drive • Moscow, ID 83843 • (208) 883-2839 • Fax (208) 882-9246 • email moscow@anateklabs.com
504 E Sprague Ste. D • Spokane WA 99202 • (509) 838-3999 • Fax (509) 838-4433 • email spokane@anateklabs.com

Login Report

Customer Name: GEO ENGINEERS
523 E 2ND
SPOKANE WA 99202

Order ID: 140417045
Order Date: 4/17/2014

Contact Name: SCOTT LATHEN
Comment:

Project Name: CLARK FORK RIVER DELTA 15387-014-00

Sample #: 140417045-001 **Customer Sample #:** HA-1(1.5-2.0)

Recv'd: ☑ **Collector:** **Date Collected:** 4/16/2014
Quantity: 1 **Matrix:** Soil **Date Received:** 4/17/2014 12:00:00 PM
Comment:

Test	Lab	Method	Due Date	Priority
%Moisture	S	%moisture	4/29/2014	***Normal (~10 Days)***
CADMIUM	S	EPA 6020A	4/29/2014	***Normal (~10 Days)***
COPPER	S	EPA 6020A	4/29/2014	***Normal (~10 Days)***
LEAD	S	EPA 6020A	4/29/2014	***Normal (~10 Days)***
MERCURY-ICPMS	S	EPA 6020A	4/29/2014	***Normal (~10 Days)***
ZINC	S	EPA 6020A	4/29/2014	***Normal (~10 Days)***

Sample #: 140417045-002 **Customer Sample #:** HA-1(4.5-5.0)

Recv'd: ☑ **Collector:** **Date Collected:** 4/16/2014
Quantity: 1 **Matrix:** Soil **Date Received:** 4/17/2014 12:00:00 PM
Comment:

Test	Lab	Method	Due Date	Priority
%Moisture	S	%moisture	4/29/2014	***Normal (~10 Days)***
CADMIUM	S	EPA 6020A	4/29/2014	***Normal (~10 Days)***
COPPER	S	EPA 6020A	4/29/2014	***Normal (~10 Days)***
LEAD	S	EPA 6020A	4/29/2014	***Normal (~10 Days)***
MERCURY-ICPMS	S	EPA 6020A	4/29/2014	***Normal (~10 Days)***
ZINC	S	EPA 6020A	4/29/2014	***Normal (~10 Days)***

Preliminary Draft for Agency Review

Customer Name: GEO ENGINEERS
523 E 2ND
SPOKANE WA 99202

Order ID: 140417045
Order Date: 4/17/2014

Contact Name: SCOTT LATHEN
Comment:

Project Name: CLARK FORK RIVER DELTA 15387-014-00

Sample #: 140417045-003 **Customer Sample #:** HA-1(6.5-7.0)

Recv'd: ☑ **Collector:** **Date Collected:** 4/16/2014
Quantity: 1 **Matrix:** Soil **Date Received:** 4/17/2014 12:00:00 PM
Comment:

Test	Lab	Method	Due Date	Priority
%Moisture	S	%moisture	4/29/2014	***Normal (~10 Days)***
CADMIUM	S	EPA 6020A	4/29/2014	***Normal (~10 Days)***
COPPER	S	EPA 6020A	4/29/2014	***Normal (~10 Days)***
LEAD	S	EPA 6020A	4/29/2014	***Normal (~10 Days)***
MERCURY-ICPMS	S	EPA 6020A	4/29/2014	***Normal (~10 Days)***
ZINC	S	EPA 6020A	4/29/2014	***Normal (~10 Days)***

Sample #: 140417045-004 **Customer Sample #:** HA-2(1.5-2.0)

Recv'd: ☑ **Collector:** **Date Collected:** 4/16/2014
Quantity: 1 **Matrix:** Soil **Date Received:** 4/17/2014 12:00:00 PM
Comment:

Test	Lab	Method	Due Date	Priority
%Moisture	S	%moisture	4/29/2014	***Normal (~10 Days)***
CADMIUM	S	EPA 6020A	4/29/2014	***Normal (~10 Days)***
COPPER	S	EPA 6020A	4/29/2014	***Normal (~10 Days)***
LEAD	S	EPA 6020A	4/29/2014	***Normal (~10 Days)***
MERCURY-ICPMS	S	EPA 6020A	4/29/2014	***Normal (~10 Days)***
ZINC	S	EPA 6020A	4/29/2014	***Normal (~10 Days)***

Sample #: 140417045-005 **Customer Sample #:** HA-2(4.5-5.0)

Recv'd: ☑ **Collector:** **Date Collected:** 4/16/2014
Quantity: 1 **Matrix:** Soil **Date Received:** 4/17/2014 12:00:00 PM
Comment:

Test	Lab	Method	Due Date	Priority
%Moisture	S	%moisture	4/29/2014	***Normal (~10 Days)***
CADMIUM	S	EPA 6020A	4/29/2014	***Normal (~10 Days)***
COPPER	S	EPA 6020A	4/29/2014	***Normal (~10 Days)***
LEAD	S	EPA 6020A	4/29/2014	***Normal (~10 Days)***

Preliminary Draft for Agency Review

Customer Name: GEO ENGINEERS
523 E 2ND
SPOKANE WA 99202

Order ID: 140417045
Order Date: 4/17/2014

Contact Name: SCOTT LATHEN
Comment:

Project Name: CLARK FORK RIVER DELTA 15387-014-00

MERCURY-ICPMS	S	EPA 6020A	4/29/2014	***Normal (~10 Days)***
ZINC	S	EPA 6020A	4/29/2014	***Normal (~10 Days)***

Sample #: 140417045-006 **Customer Sample #:** HA-2(6.5-7.0)

Recv'd: ☑ **Collector:** **Date Collected:** 4/16/2014
Quantity: 1 **Matrix:** Soil **Date Received:** 4/17/2014 12:00:00 PM
Comment:

Test	Lab	Method	Due Date	Priority
%Moisture	S	%moisture	4/29/2014	***Normal (~10 Days)***
CADMIUM	S	EPA 6020A	4/29/2014	***Normal (~10 Days)***
COPPER	S	EPA 6020A	4/29/2014	***Normal (~10 Days)***
LEAD	S	EPA 6020A	4/29/2014	***Normal (~10 Days)***
MERCURY-ICPMS	S	EPA 6020A	4/29/2014	***Normal (~10 Days)***
ZINC	S	EPA 6020A	4/29/2014	***Normal (~10 Days)***

Sample #: 140417045-007 **Customer Sample #:** HA-2(9-9.5)

Recv'd: ☑ **Collector:** **Date Collected:** 4/16/2014
Quantity: 1 **Matrix:** Soil **Date Received:** 4/17/2014 12:00:00 PM
Comment:

Test	Lab	Method	Due Date	Priority
%Moisture	S	%moisture	4/29/2014	***Normal (~10 Days)***
CADMIUM	S	EPA 6020A	4/29/2014	***Normal (~10 Days)***
COPPER	S	EPA 6020A	4/29/2014	***Normal (~10 Days)***
LEAD	S	EPA 6020A	4/29/2014	***Normal (~10 Days)***
MERCURY-ICPMS	S	EPA 6020A	4/29/2014	***Normal (~10 Days)***
ZINC	S	EPA 6020A	4/29/2014	***Normal (~10 Days)***

Sample #: 140417045-008 **Customer Sample #:** HA-3A(1.5-2)

Recv'd: ☑ **Collector:** **Date Collected:** 4/16/2014
Quantity: 1 **Matrix:** Soil **Date Received:** 4/17/2014 12:00:00 PM
Comment:

Test	Lab	Method	Due Date	Priority
%Moisture	S	%moisture	4/29/2014	***Normal (~10 Days)***
CADMIUM	S	EPA 6020A	4/29/2014	***Normal (~10 Days)***

Preliminary Draft for Agency Review

Customer Name: GEO ENGINEERS
523 E 2ND
SPOKANE WA 99202

Order ID: 140417045
Order Date: 4/17/2014

Contact Name: SCOTT LATHEN
Comment:

Project Name: CLARK FORK RIVER DELTA 15387-014-00

COPPER	S	EPA 6020A	4/29/2014	***Normal (~10 Days)***
LEAD	S	EPA 6020A	4/29/2014	***Normal (~10 Days)***
MERCURY-ICPMS	S	EPA 6020A	4/29/2014	***Normal (~10 Days)***
ZINC	S	EPA 6020A	4/29/2014	***Normal (~10 Days)***

Sample #: 140417045-009 **Customer Sample #:** HA-3A(4-4.5)

Recv'd: ☑ **Collector:** **Date Collected:** 4/16/2014
Quantity: 1 **Matrix:** Soil **Date Received:** 4/17/2014 12:00:00 PM
Comment:

Test	Lab	Method	Due Date	Priority
%Moisture	S	%moisture	4/29/2014	***Normal (~10 Days)***
CADMIUM	S	EPA 6020A	4/29/2014	***Normal (~10 Days)***
COPPER	S	EPA 6020A	4/29/2014	***Normal (~10 Days)***
LEAD	S	EPA 6020A	4/29/2014	***Normal (~10 Days)***
MERCURY-ICPMS	S	EPA 6020A	4/29/2014	***Normal (~10 Days)***
ZINC	S	EPA 6020A	4/29/2014	***Normal (~10 Days)***

Sample #: 140417045-010 **Customer Sample #:** HA-4A(1.5-2)

Recv'd: ☑ **Collector:** **Date Collected:** 4/16/2014
Quantity: 1 **Matrix:** Soil **Date Received:** 4/17/2014 12:00:00 PM
Comment:

Test	Lab	Method	Due Date	Priority
%Moisture	S	%moisture	4/29/2014	***Normal (~10 Days)***
CADMIUM	S	EPA 6020A	4/29/2014	***Normal (~10 Days)***
COPPER	S	EPA 6020A	4/29/2014	***Normal (~10 Days)***
LEAD	S	EPA 6020A	4/29/2014	***Normal (~10 Days)***
MERCURY-ICPMS	S	EPA 6020A	4/29/2014	***Normal (~10 Days)***
ZINC	S	EPA 6020A	4/29/2014	***Normal (~10 Days)***

Preliminary Draft for Agency Review

Customer Name: GEO ENGINEERS
523 E 2ND
SPOKANE WA 99202

Order ID: 140417045
Order Date: 4/17/2014

Contact Name: SCOTT LATHEN
Comment:

Project Name: CLARK FORK RIVER DELTA 15387-014-00

Sample #: 140417045-011 **Customer Sample #:** HA-4A(4-4.5)

Recv'd: ☑ **Collector:** **Date Collected:** 4/16/2014
Quantity: 1 **Matrix:** Soil **Date Received:** 4/17/2014 12:00:00 PM
Comment:

Test	Lab	Method	Due Date	Priority
%Moisture	S	%moisture	4/29/2014	***Normal (~10 Days)***
CADMIUM	S	EPA 6020A	4/29/2014	***Normal (~10 Days)***
COPPER	S	EPA 6020A	4/29/2014	***Normal (~10 Days)***
LEAD	S	EPA 6020A	4/29/2014	***Normal (~10 Days)***
MERCURY-ICPMS	S	EPA 6020A	4/29/2014	***Normal (~10 Days)***
ZINC	S	EPA 6020A	4/29/2014	***Normal (~10 Days)***

Sample #: 140417045-012 **Customer Sample #:** HA-4A(6-6.5)

Recv'd: ☑ **Collector:** **Date Collected:** 4/16/2014
Quantity: 1 **Matrix:** Soil **Date Received:** 4/17/2014 12:00:00 PM
Comment:

Test	Lab	Method	Due Date	Priority
%Moisture	S	%moisture	4/29/2014	***Normal (~10 Days)***
CADMIUM	S	EPA 6020A	4/29/2014	***Normal (~10 Days)***
COPPER	S	EPA 6020A	4/29/2014	***Normal (~10 Days)***
LEAD	S	EPA 6020A	4/29/2014	***Normal (~10 Days)***
MERCURY-ICPMS	S	EPA 6020A	4/29/2014	***Normal (~10 Days)***
ZINC	S	EPA 6020A	4/29/2014	***Normal (~10 Days)***

Sample #: 140417045-013 **Customer Sample #:** HA-5(1.5-2)

Recv'd: ☑ **Collector:** **Date Collected:** 4/16/2014
Quantity: 1 **Matrix:** Soil **Date Received:** 4/17/2014 12:00:00 PM
Comment:

Test	Lab	Method	Due Date	Priority
%Moisture	S	%moisture	4/29/2014	***Normal (~10 Days)***
CADMIUM	S	EPA 6020A	4/29/2014	***Normal (~10 Days)***
COPPER	S	EPA 6020A	4/29/2014	***Normal (~10 Days)***
LEAD	S	EPA 6020A	4/29/2014	***Normal (~10 Days)***

Preliminary Draft for Agency Review

Customer Name: GEO ENGINEERS
523 E 2ND
SPOKANE WA 99202

Order ID: 140417045
Order Date: 4/17/2014

Contact Name: SCOTT LATHEN
Comment:

Project Name: CLARK FORK RIVER DELTA 15387-014-00

MERCURY-ICPMS	S	EPA 6020A	4/29/2014	***Normal (~10 Days)***
ZINC	S	EPA 6020A	4/29/2014	***Normal (~10 Days)***

Sample #: 140417045-014 **Customer Sample #:** HA-5A(3.5-4)

Recv'd: ☑ **Collector:** **Date Collected:** 4/16/2014
Quantity: 1 **Matrix:** Soil **Date Received:** 4/17/2014 12:00:00 PM
Comment:

Test	Lab	Method	Due Date	Priority
%Moisture	S	%moisture	4/29/2014	***Normal (~10 Days)***
CADMIUM	S	EPA 6020A	4/29/2014	***Normal (~10 Days)***
COPPER	S	EPA 6020A	4/29/2014	***Normal (~10 Days)***
LEAD	S	EPA 6020A	4/29/2014	***Normal (~10 Days)***
MERCURY-ICPMS	S	EPA 6020A	4/29/2014	***Normal (~10 Days)***
ZINC	S	EPA 6020A	4/29/2014	***Normal (~10 Days)***

Sample #: 140417045-015 **Customer Sample #:** HA-6(2-2.5)

Recv'd: ☑ **Collector:** **Date Collected:** 4/15/2014
Quantity: 1 **Matrix:** Soil **Date Received:** 4/17/2014 12:00:00 PM
Comment:

Test	Lab	Method	Due Date	Priority
%Moisture	S	%moisture	4/29/2014	***Normal (~10 Days)***
CADMIUM	S	EPA 6020A	4/29/2014	***Normal (~10 Days)***
COPPER	S	EPA 6020A	4/29/2014	***Normal (~10 Days)***
LEAD	S	EPA 6020A	4/29/2014	***Normal (~10 Days)***
MERCURY-ICPMS	S	EPA 6020A	4/29/2014	***Normal (~10 Days)***
ZINC	S	EPA 6020A	4/29/2014	***Normal (~10 Days)***

Sample #: 140417045-016 **Customer Sample #:** HA-6(4-4.5)

Recv'd: ☑ **Collector:** **Date Collected:** 4/15/2014
Quantity: 1 **Matrix:** Soil **Date Received:** 4/17/2014 12:00:00 PM
Comment:

Test	Lab	Method	Due Date	Priority
%Moisture	S	%moisture	4/29/2014	***Normal (~10 Days)***
CADMIUM	S	EPA 6020A	4/29/2014	***Normal (~10 Days)***

Preliminary Draft for Agency Review

Customer Name: GEO ENGINEERS
523 E 2ND
SPOKANE WA 99202

Order ID: 140417045
Order Date: 4/17/2014

Contact Name: SCOTT LATHEN
Comment:

Project Name: CLARK FORK RIVER DELTA 15387-014-00

COPPER	S	EPA 6020A	4/29/2014	***Normal (~10 Days)***
LEAD	S	EPA 6020A	4/29/2014	***Normal (~10 Days)***
MERCURY-ICPMS	S	EPA 6020A	4/29/2014	***Normal (~10 Days)***
ZINC	S	EPA 6020A	4/29/2014	***Normal (~10 Days)***

Sample #: 140417045-017 **Customer Sample #:** HA-6(6-6.5)

Recv'd: ☑ **Collector:** **Date Collected:** 4/15/2014
Quantity: 1 **Matrix:** Soil **Date Received:** 4/17/2014 12:00:00 PM
Comment:

Test	Lab	Method	Due Date	Priority
%Moisture	S	%moisture	4/29/2014	***Normal (~10 Days)***
CADMIUM	S	EPA 6020A	4/29/2014	***Normal (~10 Days)***
COPPER	S	EPA 6020A	4/29/2014	***Normal (~10 Days)***
LEAD	S	EPA 6020A	4/29/2014	***Normal (~10 Days)***
MERCURY-ICPMS	S	EPA 6020A	4/29/2014	***Normal (~10 Days)***
ZINC	S	EPA 6020A	4/29/2014	***Normal (~10 Days)***

Sample #: 140417045-018 **Customer Sample #:** HA-7(1.5-2)

Recv'd: ☑ **Collector:** **Date Collected:** 4/16/2014
Quantity: 1 **Matrix:** Soil **Date Received:** 4/17/2014 12:00:00 PM
Comment:

Test	Lab	Method	Due Date	Priority
%Moisture	S	%moisture	4/29/2014	***Normal (~10 Days)***
CADMIUM	S	EPA 6020A	4/29/2014	***Normal (~10 Days)***
COPPER	S	EPA 6020A	4/29/2014	***Normal (~10 Days)***
LEAD	S	EPA 6020A	4/29/2014	***Normal (~10 Days)***
MERCURY-ICPMS	S	EPA 6020A	4/29/2014	***Normal (~10 Days)***
ZINC	S	EPA 6020A	4/29/2014	***Normal (~10 Days)***

Preliminary Draft for Agency Review

Customer Name: GEO ENGINEERS
523 E 2ND
SPOKANE WA 99202

Order ID: 140417045
Order Date: 4/17/2014

Contact Name: SCOTT LATHEN
Comment:

Project Name: CLARK FORK RIVER DELTA 15387-014-00

Sample #: 140417045-019 **Customer Sample #:** HA-7(4-4.5)

Recv'd: ☑ **Collector:** **Date Collected:** 4/16/2014
Quantity: 1 **Matrix:** Soil **Date Received:** 4/17/2014 12:00:00 PM
Comment:

Test	Lab	Method	Due Date	Priority
%Moisture	S	%moisture	4/29/2014	***Normal (~10 Days)***
CADMIUM	S	EPA 6020A	4/29/2014	***Normal (~10 Days)***
COPPER	S	EPA 6020A	4/29/2014	***Normal (~10 Days)***
LEAD	S	EPA 6020A	4/29/2014	***Normal (~10 Days)***
MERCURY-ICPMS	S	EPA 6020A	4/29/2014	***Normal (~10 Days)***
ZINC	S	EPA 6020A	4/29/2014	***Normal (~10 Days)***

Sample #: 140417045-020 **Customer Sample #:** HA-7(6-6.5)

Recv'd: ☑ **Collector:** **Date Collected:** 4/16/2014
Quantity: 1 **Matrix:** Soil **Date Received:** 4/17/2014 12:00:00 PM
Comment:

Test	Lab	Method	Due Date	Priority
%Moisture	S	%moisture	4/29/2014	***Normal (~10 Days)***
CADMIUM	S	EPA 6020A	4/29/2014	***Normal (~10 Days)***
COPPER	S	EPA 6020A	4/29/2014	***Normal (~10 Days)***
LEAD	S	EPA 6020A	4/29/2014	***Normal (~10 Days)***
MERCURY-ICPMS	S	EPA 6020A	4/29/2014	***Normal (~10 Days)***
ZINC	S	EPA 6020A	4/29/2014	***Normal (~10 Days)***

Sample #: 140417045-021 **Customer Sample #:** HA-8(1.5-2)

Recv'd: ☑ **Collector:** **Date Collected:** 4/16/2014
Quantity: 1 **Matrix:** Soil **Date Received:** 4/17/2014 12:00:00 PM
Comment:

Test	Lab	Method	Due Date	Priority
%Moisture	S	%moisture	4/29/2014	***Normal (~10 Days)***
CADMIUM	S	EPA 6020A	4/29/2014	***Normal (~10 Days)***
COPPER	S	EPA 6020A	4/29/2014	***Normal (~10 Days)***
LEAD	S	EPA 6020A	4/29/2014	***Normal (~10 Days)***

Preliminary Draft for Agency Review

Customer Name: GEO ENGINEERS
523 E 2ND
SPOKANE WA 99202

Order ID: 140417045
Order Date: 4/17/2014

Contact Name: SCOTT LATHEN
Comment:

Project Name: CLARK FORK RIVER DELTA 15387-014-00

MERCURY-ICPMS	S	EPA 6020A	4/29/2014	***Normal (~10 Days)***
ZINC	S	EPA 6020A	4/29/2014	***Normal (~10 Days)***

Sample #: 140417045-022 **Customer Sample #:** HA-8(4-4.5)

Recv'd: ☑ **Collector:** **Date Collected:** 4/16/2014
Quantity: 1 **Matrix:** Soil **Date Received:** 4/17/2014 12:00:00 PM
Comment:

Test	Lab	Method	Due Date	Priority
%Moisture	S	%moisture	4/29/2014	***Normal (~10 Days)***
CADMIUM	S	EPA 6020A	4/29/2014	***Normal (~10 Days)***
COPPER	S	EPA 6020A	4/29/2014	***Normal (~10 Days)***
LEAD	S	EPA 6020A	4/29/2014	***Normal (~10 Days)***
MERCURY-ICPMS	S	EPA 6020A	4/29/2014	***Normal (~10 Days)***
ZINC	S	EPA 6020A	4/29/2014	***Normal (~10 Days)***

Sample #: 140417045-023 **Customer Sample #:** HA-8(6-6.5)

Recv'd: ☑ **Collector:** **Date Collected:** 4/16/2014
Quantity: 1 **Matrix:** Soil **Date Received:** 4/17/2014 12:00:00 PM
Comment:

Test	Lab	Method	Due Date	Priority
%Moisture	S	%moisture	4/29/2014	***Normal (~10 Days)***
CADMIUM	S	EPA 6020A	4/29/2014	***Normal (~10 Days)***
COPPER	S	EPA 6020A	4/29/2014	***Normal (~10 Days)***
LEAD	S	EPA 6020A	4/29/2014	***Normal (~10 Days)***
MERCURY-ICPMS	S	EPA 6020A	4/29/2014	***Normal (~10 Days)***
ZINC	S	EPA 6020A	4/29/2014	***Normal (~10 Days)***

Sample #: 140417045-024 **Customer Sample #:** HA-9(1.5-2)

Recv'd: ☑ **Collector:** **Date Collected:** 4/16/2014
Quantity: 1 **Matrix:** Soil **Date Received:** 4/17/2014 12:00:00 PM
Comment:

Test	Lab	Method	Due Date	Priority
%Moisture	S	%moisture	4/29/2014	***Normal (~10 Days)***
CADMIUM	S	EPA 6020A	4/29/2014	***Normal (~10 Days)***

Preliminary Draft for Agency Review

Customer Name: GEO ENGINEERS
523 E 2ND
SPOKANE WA 99202

Order ID: 140417045
Order Date: 4/17/2014

Contact Name: SCOTT LATHEN
Comment:

Project Name: CLARK FORK RIVER DELTA 15387-014-00

COPPER	S	EPA 6020A	4/29/2014	***Normal (~10 Days)***
LEAD	S	EPA 6020A	4/29/2014	***Normal (~10 Days)***
MERCURY-ICPMS	S	EPA 6020A	4/29/2014	***Normal (~10 Days)***
ZINC	S	EPA 6020A	4/29/2014	***Normal (~10 Days)***

Sample #: 140417045-025 **Customer Sample #:** HA-9(4-4.5)

Recv'd: ☑ **Collector:** **Date Collected:** 4/16/2014
Quantity: 1 **Matrix:** Soil **Date Received:** 4/17/2014 12:00:00 PM
Comment:

Test	Lab	Method	Due Date	Priority
%Moisture	S	%moisture	4/29/2014	***Normal (~10 Days)***
CADMIUM	S	EPA 6020A	4/29/2014	***Normal (~10 Days)***
COPPER	S	EPA 6020A	4/29/2014	***Normal (~10 Days)***
LEAD	S	EPA 6020A	4/29/2014	***Normal (~10 Days)***
MERCURY-ICPMS	S	EPA 6020A	4/29/2014	***Normal (~10 Days)***
ZINC	S	EPA 6020A	4/29/2014	***Normal (~10 Days)***

Sample #: 140417045-026 **Customer Sample #:** HA-9(6-6.5)

Recv'd: ☑ **Collector:** **Date Collected:** 4/16/2014
Quantity: 1 **Matrix:** Soil **Date Received:** 4/17/2014 12:00:00 PM
Comment:

Test	Lab	Method	Due Date	Priority
%Moisture	S	%moisture	4/29/2014	***Normal (~10 Days)***
CADMIUM	S	EPA 6020A	4/29/2014	***Normal (~10 Days)***
COPPER	S	EPA 6020A	4/29/2014	***Normal (~10 Days)***
LEAD	S	EPA 6020A	4/29/2014	***Normal (~10 Days)***
MERCURY-ICPMS	S	EPA 6020A	4/29/2014	***Normal (~10 Days)***
ZINC	S	EPA 6020A	4/29/2014	***Normal (~10 Days)***

Preliminary Draft for Agency Review

Customer Name: GEO ENGINEERS
523 E 2ND
SPOKANE WA 99202

Order ID: 140417045
Order Date: 4/17/2014

Contact Name: SCOTT LATHEN
Comment:

Project Name: CLARK FORK RIVER DELTA 15387-014-00

Sample #: 140417045-027 **Customer Sample #:** HA-10(1.5-2)

Recv'd: ☑ **Collector:** **Date Collected:** 4/16/2014
Quantity: 1 **Matrix:** Soil **Date Received:** 4/17/2014 12:00:00 PM
Comment:

Test	Lab	Method	Due Date	Priority
%Moisture	S	%moisture	4/29/2014	***Normal (~10 Days)***
CADMIUM	S	EPA 6020A	4/29/2014	***Normal (~10 Days)***
COPPER	S	EPA 6020A	4/29/2014	***Normal (~10 Days)***
LEAD	S	EPA 6020A	4/29/2014	***Normal (~10 Days)***
MERCURY-ICPMS	S	EPA 6020A	4/29/2014	***Normal (~10 Days)***
ZINC	S	EPA 6020A	4/29/2014	***Normal (~10 Days)***

Sample #: 140417045-028 **Customer Sample #:** HA-10(4-4.5)

Recv'd: ☑ **Collector:** **Date Collected:** 4/16/2014
Quantity: 1 **Matrix:** Soil **Date Received:** 4/17/2014 12:00:00 PM
Comment:

Test	Lab	Method	Due Date	Priority
%Moisture	S	%moisture	4/29/2014	***Normal (~10 Days)***
CADMIUM	S	EPA 6020A	4/29/2014	***Normal (~10 Days)***
COPPER	S	EPA 6020A	4/29/2014	***Normal (~10 Days)***
LEAD	S	EPA 6020A	4/29/2014	***Normal (~10 Days)***
MERCURY-ICPMS	S	EPA 6020A	4/29/2014	***Normal (~10 Days)***
ZINC	S	EPA 6020A	4/29/2014	***Normal (~10 Days)***

Sample #: 140417045-029 **Customer Sample #:** HA-10(6-6.5)

Recv'd: ☑ **Collector:** **Date Collected:** 4/16/2014
Quantity: 1 **Matrix:** Soil **Date Received:** 4/17/2014 12:00:00 PM
Comment:

Test	Lab	Method	Due Date	Priority
%Moisture	S	%moisture	4/29/2014	***Normal (~10 Days)***
CADMIUM	S	EPA 6020A	4/29/2014	***Normal (~10 Days)***
COPPER	S	EPA 6020A	4/29/2014	***Normal (~10 Days)***
LEAD	S	EPA 6020A	4/29/2014	***Normal (~10 Days)***

Preliminary Draft for Agency Review

Customer Name: GEO ENGINEERS
523 E 2ND
SPOKANE WA 99202

Order ID: 140417045
Order Date: 4/17/2014

Contact Name: SCOTT LATHEN
Comment:

Project Name: CLARK FORK RIVER DELTA 15387-014-00

MERCURY-ICPMS	S	EPA 6020A	4/29/2014	***Normal (~10 Days)***
ZINC	S	EPA 6020A	4/29/2014	***Normal (~10 Days)***

Sample #: 140417045-030 **Customer Sample #:** HA-10(7.5-8)

Recv'd: ☑ **Collector:** **Date Collected:** 4/16/2014
Quantity: 1 **Matrix:** Soil **Date Received:** 4/17/2014 12:00:00 PM
Comment:

Test	Lab	Method	Due Date	Priority
%Moisture	S	%moisture	4/29/2014	***Normal (~10 Days)***
CADMIUM	S	EPA 6020A	4/29/2014	***Normal (~10 Days)***
COPPER	S	EPA 6020A	4/29/2014	***Normal (~10 Days)***
LEAD	S	EPA 6020A	4/29/2014	***Normal (~10 Days)***
MERCURY-ICPMS	S	EPA 6020A	4/29/2014	***Normal (~10 Days)***
ZINC	S	EPA 6020A	4/29/2014	***Normal (~10 Days)***

Sample #: 140417045-031 **Customer Sample #:** HA-11(1.5-2)

Recv'd: ☑ **Collector:** **Date Collected:** 4/15/2014
Quantity: 1 **Matrix:** Soil **Date Received:** 4/17/2014 12:00:00 PM
Comment:

Test	Lab	Method	Due Date	Priority
%Moisture	S	%moisture	4/29/2014	***Normal (~10 Days)***
CADMIUM	S	EPA 6020A	4/29/2014	***Normal (~10 Days)***
COPPER	S	EPA 6020A	4/29/2014	***Normal (~10 Days)***
LEAD	S	EPA 6020A	4/29/2014	***Normal (~10 Days)***
MERCURY-ICPMS	S	EPA 6020A	4/29/2014	***Normal (~10 Days)***
ZINC	S	EPA 6020A	4/29/2014	***Normal (~10 Days)***

Sample #: 140417045-032 **Customer Sample #:** HA-11(4-4.5)

Recv'd: ☑ **Collector:** **Date Collected:** 4/15/2014
Quantity: 1 **Matrix:** Soil **Date Received:** 4/17/2014 12:00:00 PM
Comment:

Test	Lab	Method	Due Date	Priority
%Moisture	S	%moisture	4/29/2014	***Normal (~10 Days)***
CADMIUM	S	EPA 6020A	4/29/2014	***Normal (~10 Days)***

Preliminary Draft for Agency Review

Customer Name: GEO ENGINEERS
523 E 2ND
SPOKANE WA 99202

Order ID: 140417045
Order Date: 4/17/2014

Contact Name: SCOTT LATHEN
Comment:

Project Name: CLARK FORK RIVER DELTA 15387-014-00

COPPER	S	EPA 6020A	4/29/2014	***Normal (~10 Days)***
LEAD	S	EPA 6020A	4/29/2014	***Normal (~10 Days)***
MERCURY-ICPMS	S	EPA 6020A	4/29/2014	***Normal (~10 Days)***
ZINC	S	EPA 6020A	4/29/2014	***Normal (~10 Days)***

Sample #: 140417045-033 **Customer Sample #:** HA-11(4.5-5)

Recv'd: ☑ **Collector:** **Date Collected:** 4/16/2014
Quantity: 1 **Matrix:** Soil **Date Received:** 4/17/2014 12:00:00 PM
Comment:

Test	Lab	Method	Due Date	Priority
%Moisture	S	%moisture	4/29/2014	***Normal (~10 Days)***
CADMIUM	S	EPA 6020A	4/29/2014	***Normal (~10 Days)***
COPPER	S	EPA 6020A	4/29/2014	***Normal (~10 Days)***
LEAD	S	EPA 6020A	4/29/2014	***Normal (~10 Days)***
MERCURY-ICPMS	S	EPA 6020A	4/29/2014	***Normal (~10 Days)***
ZINC	S	EPA 6020A	4/29/2014	***Normal (~10 Days)***

Sample #: 140417045-034 **Customer Sample #:** HA-12(1.5-2)

Recv'd: ☑ **Collector:** **Date Collected:** 4/16/2014
Quantity: 1 **Matrix:** Soil **Date Received:** 4/17/2014 12:00:00 PM
Comment:

Test	Lab	Method	Due Date	Priority
%Moisture	S	%moisture	4/29/2014	***Normal (~10 Days)***
CADMIUM	S	EPA 6020A	4/29/2014	***Normal (~10 Days)***
COPPER	S	EPA 6020A	4/29/2014	***Normal (~10 Days)***
LEAD	S	EPA 6020A	4/29/2014	***Normal (~10 Days)***
MERCURY-ICPMS	S	EPA 6020A	4/29/2014	***Normal (~10 Days)***
ZINC	S	EPA 6020A	4/29/2014	***Normal (~10 Days)***

Preliminary Draft for Agency Review

Customer Name: GEO ENGINEERS
523 E 2ND
SPOKANE WA 99202

Order ID: 140417045
Order Date: 4/17/2014

Contact Name: SCOTT LATHEN
Comment:

Project Name: CLARK FORK RIVER DELTA 15387-014-00

Sample #: 140417045-035 **Customer Sample #:** HA-12(4-4.5)

Recv'd: ☑ **Collector:** **Date Collected:** 4/16/2014
Quantity: 1 **Matrix:** Soil **Date Received:** 4/17/2014 12:00:00 PM
Comment:

Test	Lab	Method	Due Date	Priority
%Moisture	S	%moisture	4/29/2014	***Normal (~10 Days)***
CADMIUM	S	EPA 6020A	4/29/2014	***Normal (~10 Days)***
COPPER	S	EPA 6020A	4/29/2014	***Normal (~10 Days)***
LEAD	S	EPA 6020A	4/29/2014	***Normal (~10 Days)***
MERCURY-ICPMS	S	EPA 6020A	4/29/2014	***Normal (~10 Days)***
ZINC	S	EPA 6020A	4/29/2014	***Normal (~10 Days)***

Sample #: 140417045-036 **Customer Sample #:** HA-12(5.5-6)

Recv'd: ☑ **Collector:** **Date Collected:** 4/16/2014
Quantity: 1 **Matrix:** Soil **Date Received:** 4/17/2014 12:00:00 PM
Comment:

Test	Lab	Method	Due Date	Priority
%Moisture	S	%moisture	4/29/2014	***Normal (~10 Days)***
CADMIUM	S	EPA 6020A	4/29/2014	***Normal (~10 Days)***
COPPER	S	EPA 6020A	4/29/2014	***Normal (~10 Days)***
LEAD	S	EPA 6020A	4/29/2014	***Normal (~10 Days)***
MERCURY-ICPMS	S	EPA 6020A	4/29/2014	***Normal (~10 Days)***
ZINC	S	EPA 6020A	4/29/2014	***Normal (~10 Days)***

Sample #: 140417045-037 **Customer Sample #:** HA-13(1.5-2)

Recv'd: ☑ **Collector:** **Date Collected:** 4/15/2014
Quantity: 1 **Matrix:** Soil **Date Received:** 4/17/2014 12:00:00 PM
Comment:

Test	Lab	Method	Due Date	Priority
%Moisture	S	%moisture	4/29/2014	***Normal (~10 Days)***
CADMIUM	S	EPA 6020A	4/29/2014	***Normal (~10 Days)***
COPPER	S	EPA 6020A	4/29/2014	***Normal (~10 Days)***
LEAD	S	EPA 6020A	4/29/2014	***Normal (~10 Days)***

Preliminary Draft for Agency Review

Customer Name: GEO ENGINEERS
523 E 2ND
SPOKANE WA 99202

Order ID: 140417045
Order Date: 4/17/2014

Contact Name: SCOTT LATHEN
Comment:

Project Name: CLARK FORK RIVER DELTA 15387-014-00

MERCURY-ICPMS	S	EPA 6020A	4/29/2014	***Normal (~10 Days)***
ZINC	S	EPA 6020A	4/29/2014	***Normal (~10 Days)***

Sample #: 140417045-038 **Customer Sample #:** HA-13(4.5-5)

Recv'd: ☑ **Collector:** **Date Collected:** 4/15/2014
Quantity: 1 **Matrix:** Soil **Date Received:** 4/17/2014 12:00:00 PM
Comment:

Test	Lab	Method	Due Date	Priority
%Moisture	S	%moisture	4/29/2014	***Normal (~10 Days)***
CADMIUM	S	EPA 6020A	4/29/2014	***Normal (~10 Days)***
COPPER	S	EPA 6020A	4/29/2014	***Normal (~10 Days)***
LEAD	S	EPA 6020A	4/29/2014	***Normal (~10 Days)***
MERCURY-ICPMS	S	EPA 6020A	4/29/2014	***Normal (~10 Days)***
ZINC	S	EPA 6020A	4/29/2014	***Normal (~10 Days)***

Sample #: 140417045-039 **Customer Sample #:** HA-14(1.5-2)

Recv'd: ☑ **Collector:** **Date Collected:** 4/15/2014
Quantity: 1 **Matrix:** Soil **Date Received:** 4/17/2014 12:00:00 PM
Comment:

Test	Lab	Method	Due Date	Priority
%Moisture	S	%moisture	4/29/2014	***Normal (~10 Days)***
CADMIUM	S	EPA 6020A	4/29/2014	***Normal (~10 Days)***
COPPER	S	EPA 6020A	4/29/2014	***Normal (~10 Days)***
LEAD	S	EPA 6020A	4/29/2014	***Normal (~10 Days)***
MERCURY-ICPMS	S	EPA 6020A	4/29/2014	***Normal (~10 Days)***
ZINC	S	EPA 6020A	4/29/2014	***Normal (~10 Days)***

Sample #: 140417045-040 **Customer Sample #:** HA-14(4-4.5)

Recv'd: ☑ **Collector:** **Date Collected:** 4/15/2014
Quantity: 1 **Matrix:** Soil **Date Received:** 4/17/2014 12:00:00 PM
Comment:

Test	Lab	Method	Due Date	Priority
%Moisture	S	%moisture	4/29/2014	***Normal (~10 Days)***
CADMIUM	S	EPA 6020A	4/29/2014	***Normal (~10 Days)***

Preliminary Draft for Agency Review

Customer Name: GEO ENGINEERS
523 E 2ND
SPOKANE WA 99202

Order ID: 140417045
Order Date: 4/17/2014

Contact Name: SCOTT LATHEN
Comment:

Project Name: CLARK FORK RIVER DELTA 15387-014-00

COPPER	S	EPA 6020A	4/29/2014	***Normal (~10 Days)***
LEAD	S	EPA 6020A	4/29/2014	***Normal (~10 Days)***
MERCURY-ICPMS	S	EPA 6020A	4/29/2014	***Normal (~10 Days)***
ZINC	S	EPA 6020A	4/29/2014	***Normal (~10 Days)***

Sample #: 140417045-041 **Customer Sample #:** HA-14(6-6.5)

Recv'd: ☑ **Collector:** **Date Collected:** 4/16/2014
Quantity: 1 **Matrix:** Soil **Date Received:** 4/17/2014 12:00:00 PM
Comment:

Test	Lab	Method	Due Date	Priority
%Moisture	S	%moisture	4/29/2014	***Normal (~10 Days)***
CADMIUM	S	EPA 6020A	4/29/2014	***Normal (~10 Days)***
COPPER	S	EPA 6020A	4/29/2014	***Normal (~10 Days)***
LEAD	S	EPA 6020A	4/29/2014	***Normal (~10 Days)***
MERCURY-ICPMS	S	EPA 6020A	4/29/2014	***Normal (~10 Days)***
ZINC	S	EPA 6020A	4/29/2014	***Normal (~10 Days)***

Sample #: 140417045-042 **Customer Sample #:** HA-15(1.5-2)

Recv'd: ☑ **Collector:** **Date Collected:** 4/15/2014
Quantity: 1 **Matrix:** Soil **Date Received:** 4/17/2014 12:00:00 PM
Comment:

Test	Lab	Method	Due Date	Priority
%Moisture	S	%moisture	4/29/2014	***Normal (~10 Days)***
CADMIUM	S	EPA 6020A	4/29/2014	***Normal (~10 Days)***
COPPER	S	EPA 6020A	4/29/2014	***Normal (~10 Days)***
LEAD	S	EPA 6020A	4/29/2014	***Normal (~10 Days)***
MERCURY-ICPMS	S	EPA 6020A	4/29/2014	***Normal (~10 Days)***
ZINC	S	EPA 6020A	4/29/2014	***Normal (~10 Days)***

Preliminary Draft for Agency Review

Customer Name: GEO ENGINEERS
523 E 2ND
SPOKANE WA 99202

Order ID: 140417045
Order Date: 4/17/2014

Contact Name: SCOTT LATHEN
Comment:

Project Name: CLARK FORK RIVER DELTA 15387-014-00

Sample #: 140417045-043 **Customer Sample #:** HA-15(4-4.5)

Recv'd: ☑ **Collector:** **Date Collected:** 4/15/2014
Quantity: 1 **Matrix:** Soil **Date Received:** 4/17/2014 12:00:00 PM
Comment:

Test	Lab	Method	Due Date	Priority
%Moisture	S	%moisture	4/29/2014	***Normal (~10 Days)***
CADMIUM	S	EPA 6020A	4/29/2014	***Normal (~10 Days)***
COPPER	S	EPA 6020A	4/29/2014	***Normal (~10 Days)***
LEAD	S	EPA 6020A	4/29/2014	***Normal (~10 Days)***
MERCURY-ICPMS	S	EPA 6020A	4/29/2014	***Normal (~10 Days)***
ZINC	S	EPA 6020A	4/29/2014	***Normal (~10 Days)***

Sample #: 140417045-044 **Customer Sample #:** HA-15(6-6.5)

Recv'd: ☑ **Collector:** **Date Collected:** 4/15/2014
Quantity: 1 **Matrix:** Soil **Date Received:** 4/17/2014 12:00:00 PM
Comment:

Test	Lab	Method	Due Date	Priority
%Moisture	S	%moisture	4/29/2014	***Normal (~10 Days)***
CADMIUM	S	EPA 6020A	4/29/2014	***Normal (~10 Days)***
COPPER	S	EPA 6020A	4/29/2014	***Normal (~10 Days)***
LEAD	S	EPA 6020A	4/29/2014	***Normal (~10 Days)***
MERCURY-ICPMS	S	EPA 6020A	4/29/2014	***Normal (~10 Days)***
ZINC	S	EPA 6020A	4/29/2014	***Normal (~10 Days)***

Sample #: 140417045-045 **Customer Sample #:** HA-16(2-2.5)

Recv'd: ☑ **Collector:** **Date Collected:** 4/15/2014
Quantity: 1 **Matrix:** Soil **Date Received:** 4/17/2014 12:00:00 PM
Comment:

Test	Lab	Method	Due Date	Priority
%Moisture	S	%moisture	4/29/2014	***Normal (~10 Days)***
CADMIUM	S	EPA 6020A	4/29/2014	***Normal (~10 Days)***
COPPER	S	EPA 6020A	4/29/2014	***Normal (~10 Days)***
LEAD	S	EPA 6020A	4/29/2014	***Normal (~10 Days)***

Preliminary Draft for Agency Review

Customer Name: GEO ENGINEERS
523 E 2ND
SPOKANE WA 99202

Order ID: 140417045
Order Date: 4/17/2014

Contact Name: SCOTT LATHEN
Comment:

Project Name: CLARK FORK RIVER DELTA 15387-014-00

MERCURY-ICPMS	S	EPA 6020A	4/29/2014	***Normal (~10 Days)***
ZINC	S	EPA 6020A	4/29/2014	***Normal (~10 Days)***

Sample #: 140417045-046 **Customer Sample #:** HA-16(4-4.5)

Recv'd: ☑ **Collector:** **Date Collected:** 4/15/2014
Quantity: 1 **Matrix:** Soil **Date Received:** 4/17/2014 12:00:00 PM
Comment:

Test	Lab	Method	Due Date	Priority
%Moisture	S	%moisture	4/29/2014	***Normal (~10 Days)***
CADMIUM	S	EPA 6020A	4/29/2014	***Normal (~10 Days)***
COPPER	S	EPA 6020A	4/29/2014	***Normal (~10 Days)***
LEAD	S	EPA 6020A	4/29/2014	***Normal (~10 Days)***
MERCURY-ICPMS	S	EPA 6020A	4/29/2014	***Normal (~10 Days)***
ZINC	S	EPA 6020A	4/29/2014	***Normal (~10 Days)***

Sample #: 140417045-047 **Customer Sample #:** HA-16(6.5-7)

Recv'd: ☑ **Collector:** **Date Collected:** 4/15/2014
Quantity: 1 **Matrix:** Soil **Date Received:** 4/17/2014 12:00:00 PM
Comment:

Test	Lab	Method	Due Date	Priority
%Moisture	S	%moisture	4/29/2014	***Normal (~10 Days)***
CADMIUM	S	EPA 6020A	4/29/2014	***Normal (~10 Days)***
COPPER	S	EPA 6020A	4/29/2014	***Normal (~10 Days)***
LEAD	S	EPA 6020A	4/29/2014	***Normal (~10 Days)***
MERCURY-ICPMS	S	EPA 6020A	4/29/2014	***Normal (~10 Days)***
ZINC	S	EPA 6020A	4/29/2014	***Normal (~10 Days)***

Sample #: 140417045-048 **Customer Sample #:** HA-17(1.5-2)

Recv'd: ☑ **Collector:** **Date Collected:** 4/15/2014
Quantity: 1 **Matrix:** Soil **Date Received:** 4/17/2014 12:00:00 PM
Comment:

Test	Lab	Method	Due Date	Priority
%Moisture	S	%moisture	4/29/2014	***Normal (~10 Days)***
CADMIUM	S	EPA 6020A	4/29/2014	***Normal (~10 Days)***

Preliminary Draft for Agency Review

Customer Name: GEO ENGINEERS
523 E 2ND
SPOKANE WA 99202

Order ID: 140417045
Order Date: 4/17/2014

Contact Name: SCOTT LATHEN
Comment:

Project Name: CLARK FORK RIVER DELTA 15387-014-00

COPPER	S	EPA 6020A	4/29/2014	***Normal (~10 Days)***
LEAD	S	EPA 6020A	4/29/2014	***Normal (~10 Days)***
MERCURY-ICPMS	S	EPA 6020A	4/29/2014	***Normal (~10 Days)***
ZINC	S	EPA 6020A	4/29/2014	***Normal (~10 Days)***

Sample #: 140417045-049 **Customer Sample #:** HA-17(4-4.5)

Recv'd: ☑ **Collector:** **Date Collected:** 4/15/2014
Quantity: 1 **Matrix:** Soil **Date Received:** 4/17/2014 12:00:00 PM
Comment:

Test	Lab	Method	Due Date	Priority
%Moisture	S	%moisture	4/29/2014	***Normal (~10 Days)***
CADMIUM	S	EPA 6020A	4/29/2014	***Normal (~10 Days)***
COPPER	S	EPA 6020A	4/29/2014	***Normal (~10 Days)***
LEAD	S	EPA 6020A	4/29/2014	***Normal (~10 Days)***
MERCURY-ICPMS	S	EPA 6020A	4/29/2014	***Normal (~10 Days)***
ZINC	S	EPA 6020A	4/29/2014	***Normal (~10 Days)***

Sample #: 140417045-050 **Customer Sample #:** HA-17(6-6.5)

Recv'd: ☑ **Collector:** **Date Collected:** 4/15/2014
Quantity: 1 **Matrix:** Soil **Date Received:** 4/17/2014 12:00:00 PM
Comment:

Test	Lab	Method	Due Date	Priority
%Moisture	S	%moisture	4/29/2014	***Normal (~10 Days)***
CADMIUM	S	EPA 6020A	4/29/2014	***Normal (~10 Days)***
COPPER	S	EPA 6020A	4/29/2014	***Normal (~10 Days)***
LEAD	S	EPA 6020A	4/29/2014	***Normal (~10 Days)***
MERCURY-ICPMS	S	EPA 6020A	4/29/2014	***Normal (~10 Days)***
ZINC	S	EPA 6020A	4/29/2014	***Normal (~10 Days)***

Preliminary Draft for Agency Review

Customer Name: GEO ENGINEERS
523 E 2ND
SPOKANE WA 99202

Order ID: 140417045
Order Date: 4/17/2014

Contact Name: SCOTT LATHEN
Comment:

Project Name: CLARK FORK RIVER DELTA 15387-014-00

Sample #: 140417045-051 **Customer Sample #:** HA-18(1.5-2)

Recv'd: ☑ **Collector:** **Date Collected:** 4/15/2014
Quantity: 1 **Matrix:** Soil **Date Received:** 4/17/2014 12:00:00 PM
Comment:

Test	Lab	Method	Due Date	Priority
%Moisture	S	%moisture	4/29/2014	***Normal (~10 Days)***
CADMIUM	S	EPA 6020A	4/29/2014	***Normal (~10 Days)***
COPPER	S	EPA 6020A	4/29/2014	***Normal (~10 Days)***
LEAD	S	EPA 6020A	4/29/2014	***Normal (~10 Days)***
MERCURY-ICPMS	S	EPA 6020A	4/29/2014	***Normal (~10 Days)***
ZINC	S	EPA 6020A	4/29/2014	***Normal (~10 Days)***

Sample #: 140417045-052 **Customer Sample #:** HA-18(4-4.5)

Recv'd: ☑ **Collector:** **Date Collected:** 4/15/2014
Quantity: 1 **Matrix:** Soil **Date Received:** 4/17/2014 12:00:00 PM
Comment:

Test	Lab	Method	Due Date	Priority
%Moisture	S	%moisture	4/29/2014	***Normal (~10 Days)***
CADMIUM	S	EPA 6020A	4/29/2014	***Normal (~10 Days)***
COPPER	S	EPA 6020A	4/29/2014	***Normal (~10 Days)***
LEAD	S	EPA 6020A	4/29/2014	***Normal (~10 Days)***
MERCURY-ICPMS	S	EPA 6020A	4/29/2014	***Normal (~10 Days)***
ZINC	S	EPA 6020A	4/29/2014	***Normal (~10 Days)***

Sample #: 140417045-053 **Customer Sample #:** HA-18(6-6.5)

Recv'd: ☑ **Collector:** **Date Collected:** 4/15/2014
Quantity: 1 **Matrix:** Soil **Date Received:** 4/17/2014 12:00:00 PM
Comment:

Test	Lab	Method	Due Date	Priority
%Moisture	S	%moisture	4/29/2014	***Normal (~10 Days)***
CADMIUM	S	EPA 6020A	4/29/2014	***Normal (~10 Days)***
COPPER	S	EPA 6020A	4/29/2014	***Normal (~10 Days)***
LEAD	S	EPA 6020A	4/29/2014	***Normal (~10 Days)***

Preliminary Draft for Agency Review

Customer Name: GEO ENGINEERS
523 E 2ND
SPOKANE WA 99202

Order ID: 140417045
Order Date: 4/17/2014

Contact Name: SCOTT LATHEN
Comment:

Project Name: CLARK FORK RIVER DELTA 15387-014-00

MERCURY-ICPMS	S	EPA 6020A	4/29/2014	***Normal (~10 Days)***
ZINC	S	EPA 6020A	4/29/2014	***Normal (~10 Days)***

Sample #: 140417045-054 **Customer Sample #:** HA-19(1.5-2)

Recv'd: ☑ **Collector:** **Date Collected:** 4/15/2014
Quantity: 1 **Matrix:** Soil **Date Received:** 4/17/2014 12:00:00 PM
Comment:

Test	Lab	Method	Due Date	Priority
%Moisture	S	%moisture	4/29/2014	***Normal (~10 Days)***
CADMIUM	S	EPA 6020A	4/29/2014	***Normal (~10 Days)***
COPPER	S	EPA 6020A	4/29/2014	***Normal (~10 Days)***
LEAD	S	EPA 6020A	4/29/2014	***Normal (~10 Days)***
MERCURY-ICPMS	S	EPA 6020A	4/29/2014	***Normal (~10 Days)***
ZINC	S	EPA 6020A	4/29/2014	***Normal (~10 Days)***

Sample #: 140417045-055 **Customer Sample #:** HA-19(4-4.5)

Recv'd: ☑ **Collector:** **Date Collected:** 4/15/2014
Quantity: 1 **Matrix:** Soil **Date Received:** 4/17/2014 12:00:00 PM
Comment:

Test	Lab	Method	Due Date	Priority
%Moisture	S	%moisture	4/29/2014	***Normal (~10 Days)***
CADMIUM	S	EPA 6020A	4/29/2014	***Normal (~10 Days)***
COPPER	S	EPA 6020A	4/29/2014	***Normal (~10 Days)***
LEAD	S	EPA 6020A	4/29/2014	***Normal (~10 Days)***
MERCURY-ICPMS	S	EPA 6020A	4/29/2014	***Normal (~10 Days)***
ZINC	S	EPA 6020A	4/29/2014	***Normal (~10 Days)***

Sample #: 140417045-056 **Customer Sample #:** HA-19(6-6.5)

Recv'd: ☑ **Collector:** **Date Collected:** 4/15/2014
Quantity: 1 **Matrix:** Soil **Date Received:** 4/17/2014 12:00:00 PM
Comment:

Test	Lab	Method	Due Date	Priority
%Moisture	S	%moisture	4/29/2014	***Normal (~10 Days)***
CADMIUM	S	EPA 6020A	4/29/2014	***Normal (~10 Days)***

Preliminary Draft for Agency Review

Customer Name: GEO ENGINEERS
523 E 2ND
SPOKANE WA 99202

Order ID: 140417045
Order Date: 4/17/2014

Contact Name: SCOTT LATHEN
Comment:

Project Name: CLARK FORK RIVER DELTA 15387-014-00

COPPER	S	EPA 6020A	4/29/2014	***Normal (~10 Days)***
LEAD	S	EPA 6020A	4/29/2014	***Normal (~10 Days)***
MERCURY-ICPMS	S	EPA 6020A	4/29/2014	***Normal (~10 Days)***
ZINC	S	EPA 6020A	4/29/2014	***Normal (~10 Days)***

Sample #: 140417045-057 **Customer Sample #:** HA-20(1.5-2)

Recv'd: ☑ **Collector:** **Date Collected:** 4/15/2014
Quantity: 1 **Matrix:** Soil **Date Received:** 4/17/2014 12:00:00 PM
Comment:

Test	Lab	Method	Due Date	Priority
%Moisture	S	%moisture	4/29/2014	***Normal (~10 Days)***
CADMIUM	S	EPA 6020A	4/29/2014	***Normal (~10 Days)***
COPPER	S	EPA 6020A	4/29/2014	***Normal (~10 Days)***
LEAD	S	EPA 6020A	4/29/2014	***Normal (~10 Days)***
MERCURY-ICPMS	S	EPA 6020A	4/29/2014	***Normal (~10 Days)***
ZINC	S	EPA 6020A	4/29/2014	***Normal (~10 Days)***

Sample #: 140417045-058 **Customer Sample #:** HA-20(4.5-5)

Recv'd: ☑ **Collector:** **Date Collected:** 4/15/2014
Quantity: 1 **Matrix:** Soil **Date Received:** 4/17/2014 12:00:00 PM
Comment:

Test	Lab	Method	Due Date	Priority
%Moisture	S	%moisture	4/29/2014	***Normal (~10 Days)***
CADMIUM	S	EPA 6020A	4/29/2014	***Normal (~10 Days)***
COPPER	S	EPA 6020A	4/29/2014	***Normal (~10 Days)***
LEAD	S	EPA 6020A	4/29/2014	***Normal (~10 Days)***
MERCURY-ICPMS	S	EPA 6020A	4/29/2014	***Normal (~10 Days)***
ZINC	S	EPA 6020A	4/29/2014	***Normal (~10 Days)***

Preliminary Draft for Agency Review

Customer Name: GEO ENGINEERS
523 E 2ND
SPOKANE WA 99202

Order ID: 140417045
Order Date: 4/17/2014

Contact Name: SCOTT LATHEN
Comment:

Project Name: CLARK FORK RIVER DELTA 15387-014-00

Sample #: 140417045-059 **Customer Sample #:** HA-20(6.5-7)

Recv'd: ☑ **Collector:** **Date Collected:** 4/15/2014
Quantity: 1 **Matrix:** Soil **Date Received:** 4/17/2014 12:00:00 PM
Comment:

Test	Lab	Method	Due Date	Priority
%Moisture	S	%moisture	4/29/2014	***Normal (~10 Days)***
CADMIUM	S	EPA 6020A	4/29/2014	***Normal (~10 Days)***
COPPER	S	EPA 6020A	4/29/2014	***Normal (~10 Days)***
LEAD	S	EPA 6020A	4/29/2014	***Normal (~10 Days)***
MERCURY-ICPMS	S	EPA 6020A	4/29/2014	***Normal (~10 Days)***
ZINC	S	EPA 6020A	4/29/2014	***Normal (~10 Days)***

Sample #: 140417045-060 **Customer Sample #:** HA-21(1.5-2)

Recv'd: ☑ **Collector:** **Date Collected:** 4/15/2014
Quantity: 1 **Matrix:** Soil **Date Received:** 4/17/2014 12:00:00 PM
Comment:

Test	Lab	Method	Due Date	Priority
%Moisture	S	%moisture	4/29/2014	***Normal (~10 Days)***
CADMIUM	S	EPA 6020A	4/29/2014	***Normal (~10 Days)***
COPPER	S	EPA 6020A	4/29/2014	***Normal (~10 Days)***
LEAD	S	EPA 6020A	4/29/2014	***Normal (~10 Days)***
MERCURY-ICPMS	S	EPA 6020A	4/29/2014	***Normal (~10 Days)***
ZINC	S	EPA 6020A	4/29/2014	***Normal (~10 Days)***

Sample #: 140417045-061 **Customer Sample #:** HA-21(4.5-5)

Recv'd: ☑ **Collector:** **Date Collected:** 4/15/2014
Quantity: 1 **Matrix:** Soil **Date Received:** 4/17/2014 12:00:00 PM
Comment:

Test	Lab	Method	Due Date	Priority
%Moisture	S	%moisture	4/29/2014	***Normal (~10 Days)***
CADMIUM	S	EPA 6020A	4/29/2014	***Normal (~10 Days)***
COPPER	S	EPA 6020A	4/29/2014	***Normal (~10 Days)***
LEAD	S	EPA 6020A	4/29/2014	***Normal (~10 Days)***

Preliminary Draft for Agency Review

Customer Name: GEO ENGINEERS
523 E 2ND
SPOKANE WA 99202

Order ID: 140417045
Order Date: 4/17/2014

Contact Name: SCOTT LATHEN
Comment:

Project Name: CLARK FORK RIVER DELTA 15387-014-00

MERCURY-ICPMS	S	EPA 6020A	4/29/2014	***Normal (~10 Days)***
ZINC	S	EPA 6020A	4/29/2014	***Normal (~10 Days)***

Sample #: 140417045-062 **Customer Sample #:** HA-21(6.5-7)

Recv'd: ☑ **Collector:** **Date Collected:** 4/15/2014
Quantity: 1 **Matrix:** Soil **Date Received:** 4/17/2014 12:00:00 PM
Comment:

Test	Lab	Method	Due Date	Priority
%Moisture	S	%moisture	4/29/2014	***Normal (~10 Days)***
CADMIUM	S	EPA 6020A	4/29/2014	***Normal (~10 Days)***
COPPER	S	EPA 6020A	4/29/2014	***Normal (~10 Days)***
LEAD	S	EPA 6020A	4/29/2014	***Normal (~10 Days)***
MERCURY-ICPMS	S	EPA 6020A	4/29/2014	***Normal (~10 Days)***
ZINC	S	EPA 6020A	4/29/2014	***Normal (~10 Days)***

Sample #: 140417045-063 **Customer Sample #:** HA-21(9-9.5)

Recv'd: ☑ **Collector:** **Date Collected:** 4/15/2014
Quantity: 1 **Matrix:** Soil **Date Received:** 4/17/2014 12:00:00 PM
Comment:

Test	Lab	Method	Due Date	Priority
%Moisture	S	%moisture	4/29/2014	***Normal (~10 Days)***
CADMIUM	S	EPA 6020A	4/29/2014	***Normal (~10 Days)***
COPPER	S	EPA 6020A	4/29/2014	***Normal (~10 Days)***
LEAD	S	EPA 6020A	4/29/2014	***Normal (~10 Days)***
MERCURY-ICPMS	S	EPA 6020A	4/29/2014	***Normal (~10 Days)***
ZINC	S	EPA 6020A	4/29/2014	***Normal (~10 Days)***

Sample #: 140417045-064 **Customer Sample #:** HA-22(2-2.5)

Recv'd: ☑ **Collector:** **Date Collected:** 4/15/2014
Quantity: 1 **Matrix:** Soil **Date Received:** 4/17/2014 12:00:00 PM
Comment:

Test	Lab	Method	Due Date	Priority
%Moisture	S	%moisture	4/29/2014	***Normal (~10 Days)***
CADMIUM	S	EPA 6020A	4/29/2014	***Normal (~10 Days)***

Preliminary Draft for Agency Review

Customer Name: GEO ENGINEERS
523 E 2ND
SPOKANE WA 99202

Order ID: 140417045
Order Date: 4/17/2014

Contact Name: SCOTT LATHEN
Comment:

Project Name: CLARK FORK RIVER DELTA 15387-014-00

COPPER	S	EPA 6020A	4/29/2014	***Normal (~10 Days)***
LEAD	S	EPA 6020A	4/29/2014	***Normal (~10 Days)***
MERCURY-ICPMS	S	EPA 6020A	4/29/2014	***Normal (~10 Days)***
ZINC	S	EPA 6020A	4/29/2014	***Normal (~10 Days)***

Sample #: 140417045-065 **Customer Sample #:** HA-22(4.5-5)

Recv'd: ☑ **Collector:** **Date Collected:** 4/15/2014
Quantity: 1 **Matrix:** Soil **Date Received:** 4/17/2014 12:00:00 PM
Comment:

Test	Lab	Method	Due Date	Priority
%Moisture	S	%moisture	4/29/2014	***Normal (~10 Days)***
CADMIUM	S	EPA 6020A	4/29/2014	***Normal (~10 Days)***
COPPER	S	EPA 6020A	4/29/2014	***Normal (~10 Days)***
LEAD	S	EPA 6020A	4/29/2014	***Normal (~10 Days)***
MERCURY-ICPMS	S	EPA 6020A	4/29/2014	***Normal (~10 Days)***
ZINC	S	EPA 6020A	4/29/2014	***Normal (~10 Days)***

Sample #: 140417045-066 **Customer Sample #:** HA-22(6.5-7)

Recv'd: ☑ **Collector:** **Date Collected:** 4/15/2014
Quantity: 1 **Matrix:** Soil **Date Received:** 4/17/2014 12:00:00 PM
Comment:

Test	Lab	Method	Due Date	Priority
%Moisture	S	%moisture	4/29/2014	***Normal (~10 Days)***
CADMIUM	S	EPA 6020A	4/29/2014	***Normal (~10 Days)***
COPPER	S	EPA 6020A	4/29/2014	***Normal (~10 Days)***
LEAD	S	EPA 6020A	4/29/2014	***Normal (~10 Days)***
MERCURY-ICPMS	S	EPA 6020A	4/29/2014	***Normal (~10 Days)***
ZINC	S	EPA 6020A	4/29/2014	***Normal (~10 Days)***

Preliminary Draft for Agency Review

Customer Name: GEO ENGINEERS
523 E 2ND
SPOKANE WA 99202

Order ID: 140417045
Order Date: 4/17/2014

Contact Name: SCOTT LATHEN
Comment:

Project Name: CLARK FORK RIVER DELTA 15387-014-00

Sample #: 140417045-067 **Customer Sample #:** HA-23(1.5-2)

Recv'd: ☑ **Collector:** **Date Collected:** 4/15/2014
Quantity: 1 **Matrix:** Soil **Date Received:** 4/17/2014 12:00:00 PM
Comment:

Test	Lab	Method	Due Date	Priority
%Moisture	S	%moisture	4/29/2014	***Normal (~10 Days)***
CADMIUM	S	EPA 6020A	4/29/2014	***Normal (~10 Days)***
COPPER	S	EPA 6020A	4/29/2014	***Normal (~10 Days)***
LEAD	S	EPA 6020A	4/29/2014	***Normal (~10 Days)***
MERCURY-ICPMS	S	EPA 6020A	4/29/2014	***Normal (~10 Days)***
ZINC	S	EPA 6020A	4/29/2014	***Normal (~10 Days)***

Sample #: 140417045-068 **Customer Sample #:** HA-23(4.5-5)

Recv'd: ☑ **Collector:** **Date Collected:** 4/15/2014
Quantity: 1 **Matrix:** Soil **Date Received:** 4/17/2014 12:00:00 PM
Comment:

Test	Lab	Method	Due Date	Priority
%Moisture	S	%moisture	4/29/2014	***Normal (~10 Days)***
CADMIUM	S	EPA 6020A	4/29/2014	***Normal (~10 Days)***
COPPER	S	EPA 6020A	4/29/2014	***Normal (~10 Days)***
LEAD	S	EPA 6020A	4/29/2014	***Normal (~10 Days)***
MERCURY-ICPMS	S	EPA 6020A	4/29/2014	***Normal (~10 Days)***
ZINC	S	EPA 6020A	4/29/2014	***Normal (~10 Days)***

Sample #: 140417045-069 **Customer Sample #:** HA-23(6.5-7)

Recv'd: ☑ **Collector:** **Date Collected:** 4/15/2014
Quantity: 1 **Matrix:** Soil **Date Received:** 4/17/2014 12:00:00 PM
Comment:

Test	Lab	Method	Due Date	Priority
%Moisture	S	%moisture	4/29/2014	***Normal (~10 Days)***
CADMIUM	S	EPA 6020A	4/29/2014	***Normal (~10 Days)***
COPPER	S	EPA 6020A	4/29/2014	***Normal (~10 Days)***
LEAD	S	EPA 6020A	4/29/2014	***Normal (~10 Days)***

Preliminary Draft for Agency Review

Customer Name: GEO ENGINEERS
523 E 2ND
SPOKANE WA 99202

Order ID: 140417045
Order Date: 4/17/2014

Contact Name: SCOTT LATHEN
Comment:

Project Name: CLARK FORK RIVER DELTA 15387-014-00

MERCURY-ICPMS	S	EPA 6020A	4/29/2014	***Normal (~10 Days)***
ZINC	S	EPA 6020A	4/29/2014	***Normal (~10 Days)***

Sample #: 140417045-070 **Customer Sample #:** HA-24(1.5-2)

Recv'd: ☑ **Collector:** **Date Collected:** 4/15/2014
Quantity: 1 **Matrix:** Soil **Date Received:** 4/17/2014 12:00:00 PM
Comment:

Test	Lab	Method	Due Date	Priority
%Moisture	S	%moisture	4/29/2014	***Normal (~10 Days)***
CADMIUM	S	EPA 6020A	4/29/2014	***Normal (~10 Days)***
COPPER	S	EPA 6020A	4/29/2014	***Normal (~10 Days)***
LEAD	S	EPA 6020A	4/29/2014	***Normal (~10 Days)***
MERCURY-ICPMS	S	EPA 6020A	4/29/2014	***Normal (~10 Days)***
ZINC	S	EPA 6020A	4/29/2014	***Normal (~10 Days)***

Sample #: 140417045-071 **Customer Sample #:** HA-24(4.5-5)

Recv'd: ☑ **Collector:** **Date Collected:** 4/15/2014
Quantity: 1 **Matrix:** Soil **Date Received:** 4/17/2014 12:00:00 PM
Comment:

Test	Lab	Method	Due Date	Priority
%Moisture	S	%moisture	4/29/2014	***Normal (~10 Days)***
CADMIUM	S	EPA 6020A	4/29/2014	***Normal (~10 Days)***
COPPER	S	EPA 6020A	4/29/2014	***Normal (~10 Days)***
LEAD	S	EPA 6020A	4/29/2014	***Normal (~10 Days)***
MERCURY-ICPMS	S	EPA 6020A	4/29/2014	***Normal (~10 Days)***
ZINC	S	EPA 6020A	4/29/2014	***Normal (~10 Days)***

Sample #: 140417045-072 **Customer Sample #:** HA-24(7-7.5)

Recv'd: ☑ **Collector:** **Date Collected:** 4/15/2014
Quantity: 1 **Matrix:** Soil **Date Received:** 4/17/2014 12:00:00 PM
Comment:

Test	Lab	Method	Due Date	Priority
%Moisture	S	%moisture	4/29/2014	***Normal (~10 Days)***
CADMIUM	S	EPA 6020A	4/29/2014	***Normal (~10 Days)***

Preliminary Draft for Agency Review

Customer Name: GEO ENGINEERS
523 E 2ND
SPOKANE WA 99202

Order ID: 140417045
Order Date: 4/17/2014

Contact Name: SCOTT LATHEN
Comment:

Project Name: CLARK FORK RIVER DELTA 15387-014-00

COPPER	S	EPA 6020A	4/29/2014	***Normal (~10 Days)***
LEAD	S	EPA 6020A	4/29/2014	***Normal (~10 Days)***
MERCURY-ICPMS	S	EPA 6020A	4/29/2014	***Normal (~10 Days)***
ZINC	S	EPA 6020A	4/29/2014	***Normal (~10 Days)***

Sample #: 140417045-073 **Customer Sample #:** HA-25(2.5-3)

Recv'd: ☑ **Collector:** **Date Collected:** 4/15/2014
Quantity: 1 **Matrix:** Soil **Date Received:** 4/17/2014 12:00:00 PM
Comment:

Test	Lab	Method	Due Date	Priority
%Moisture	S	%moisture	4/29/2014	***Normal (~10 Days)***
CADMIUM	S	EPA 6020A	4/29/2014	***Normal (~10 Days)***
COPPER	S	EPA 6020A	4/29/2014	***Normal (~10 Days)***
LEAD	S	EPA 6020A	4/29/2014	***Normal (~10 Days)***
MERCURY-ICPMS	S	EPA 6020A	4/29/2014	***Normal (~10 Days)***
ZINC	S	EPA 6020A	4/29/2014	***Normal (~10 Days)***

Sample #: 140417045-074 **Customer Sample #:** HA-25(4.5-5)

Recv'd: ☑ **Collector:** **Date Collected:** 4/15/2014
Quantity: 1 **Matrix:** Soil **Date Received:** 4/17/2014 12:00:00 PM
Comment:

Test	Lab	Method	Due Date	Priority
%Moisture	S	%moisture	4/29/2014	***Normal (~10 Days)***
CADMIUM	S	EPA 6020A	4/29/2014	***Normal (~10 Days)***
COPPER	S	EPA 6020A	4/29/2014	***Normal (~10 Days)***
LEAD	S	EPA 6020A	4/29/2014	***Normal (~10 Days)***
MERCURY-ICPMS	S	EPA 6020A	4/29/2014	***Normal (~10 Days)***
ZINC	S	EPA 6020A	4/29/2014	***Normal (~10 Days)***

Preliminary Draft for Agency Review

Customer Name: GEO ENGINEERS
523 E 2ND
SPOKANE WA 99202

Order ID: 140417045
Order Date: 4/17/2014

Contact Name: SCOTT LATHEN
Comment:

Project Name: CLARK FORK RIVER DELTA 15387-014-00

Sample #: 140417045-075 **Customer Sample #:** HA-25(6.5-7)

Recv'd: ☑ **Collector:** **Date Collected:** 4/15/2014
Quantity: 1 **Matrix:** Soil **Date Received:** 4/17/2014 12:00:00 PM
Comment:

Test	Lab	Method	Due Date	Priority
%Moisture	S	%moisture	4/29/2014	***Normal (~10 Days)***
CADMIUM	S	EPA 6020A	4/29/2014	***Normal (~10 Days)***
COPPER	S	EPA 6020A	4/29/2014	***Normal (~10 Days)***
LEAD	S	EPA 6020A	4/29/2014	***Normal (~10 Days)***
MERCURY-ICPMS	S	EPA 6020A	4/29/2014	***Normal (~10 Days)***
ZINC	S	EPA 6020A	4/29/2014	***Normal (~10 Days)***

Sample #: 140417045-076 **Customer Sample #:** HA-25(8.5-9)

Recv'd: ☑ **Collector:** **Date Collected:** 4/15/2014
Quantity: 1 **Matrix:** Soil **Date Received:** 4/17/2014 12:00:00 PM
Comment:

Test	Lab	Method	Due Date	Priority
%Moisture	S	%moisture	4/29/2014	***Normal (~10 Days)***
CADMIUM	S	EPA 6020A	4/29/2014	***Normal (~10 Days)***
COPPER	S	EPA 6020A	4/29/2014	***Normal (~10 Days)***
LEAD	S	EPA 6020A	4/29/2014	***Normal (~10 Days)***
MERCURY-ICPMS	S	EPA 6020A	4/29/2014	***Normal (~10 Days)***
ZINC	S	EPA 6020A	4/29/2014	***Normal (~10 Days)***

Sample #: 140417045-077 **Customer Sample #:** HA-26(1.5-2)

Recv'd: ☑ **Collector:** **Date Collected:** 4/16/2014
Quantity: 1 **Matrix:** Soil **Date Received:** 4/17/2014 12:00:00 PM
Comment:

Test	Lab	Method	Due Date	Priority
%Moisture	S	%moisture	4/29/2014	***Normal (~10 Days)***
CADMIUM	S	EPA 6020A	4/29/2014	***Normal (~10 Days)***
COPPER	S	EPA 6020A	4/29/2014	***Normal (~10 Days)***
LEAD	S	EPA 6020A	4/29/2014	***Normal (~10 Days)***

Preliminary Draft for Agency Review

Customer Name: GEO ENGINEERS
523 E 2ND
SPOKANE WA 99202

Order ID: 140417045
Order Date: 4/17/2014

Contact Name: SCOTT LATHEN
Comment:

Project Name: CLARK FORK RIVER DELTA 15387-014-00

MERCURY-ICPMS	S	EPA 6020A	4/29/2014	***Normal (~10 Days)***
ZINC	S	EPA 6020A	4/29/2014	***Normal (~10 Days)***

Sample #: 140417045-078 **Customer Sample #:** HA-26(5-5.5)

Recv'd: ☑ **Collector:** **Date Collected:** 4/16/2014
Quantity: 1 **Matrix:** Soil **Date Received:** 4/17/2014 12:00:00 PM
Comment:

Test	Lab	Method	Due Date	Priority
%Moisture	S	%moisture	4/29/2014	***Normal (~10 Days)***
CADMIUM	S	EPA 6020A	4/29/2014	***Normal (~10 Days)***
COPPER	S	EPA 6020A	4/29/2014	***Normal (~10 Days)***
LEAD	S	EPA 6020A	4/29/2014	***Normal (~10 Days)***
MERCURY-ICPMS	S	EPA 6020A	4/29/2014	***Normal (~10 Days)***
ZINC	S	EPA 6020A	4/29/2014	***Normal (~10 Days)***

Sample #: 140417045-079 **Customer Sample #:** HA-26(6.5-7)

Recv'd: ☑ **Collector:** **Date Collected:** 4/16/2014
Quantity: 1 **Matrix:** Soil **Date Received:** 4/17/2014 12:00:00 PM
Comment:

Test	Lab	Method	Due Date	Priority
%Moisture	S	%moisture	4/29/2014	***Normal (~10 Days)***
CADMIUM	S	EPA 6020A	4/29/2014	***Normal (~10 Days)***
COPPER	S	EPA 6020A	4/29/2014	***Normal (~10 Days)***
LEAD	S	EPA 6020A	4/29/2014	***Normal (~10 Days)***
MERCURY-ICPMS	S	EPA 6020A	4/29/2014	***Normal (~10 Days)***
ZINC	S	EPA 6020A	4/29/2014	***Normal (~10 Days)***

Sample #: 140417045-080 **Customer Sample #:** HA-26(9-9.5)

Recv'd: ☑ **Collector:** **Date Collected:** 4/16/2014
Quantity: 1 **Matrix:** Soil **Date Received:** 4/17/2014 12:00:00 PM
Comment:

Test	Lab	Method	Due Date	Priority
%Moisture	S	%moisture	4/29/2014	***Normal (~10 Days)***
CADMIUM	S	EPA 6020A	4/29/2014	***Normal (~10 Days)***

Preliminary Draft for Agency Review

Customer Name: GEO ENGINEERS
523 E 2ND
SPOKANE WA 99202

Order ID: 140417045
Order Date: 4/17/2014

Contact Name: SCOTT LATHEN
Comment:

Project Name: CLARK FORK RIVER DELTA 15387-014-00

COPPER	S	EPA 6020A	4/29/2014	***Normal (~10 Days)***
LEAD	S	EPA 6020A	4/29/2014	***Normal (~10 Days)***
MERCURY-ICPMS	S	EPA 6020A	4/29/2014	***Normal (~10 Days)***
ZINC	S	EPA 6020A	4/29/2014	***Normal (~10 Days)***

Sample #: 140417045-081 **Customer Sample #:** HA-27(1.5-2)

Recv'd: ☑ **Collector:** **Date Collected:** 4/15/2014
Quantity: 1 **Matrix:** Soil **Date Received:** 4/17/2014 12:00:00 PM
Comment:

Test	Lab	Method	Due Date	Priority
%Moisture	S	%moisture	4/29/2014	***Normal (~10 Days)***
CADMIUM	S	EPA 6020A	4/29/2014	***Normal (~10 Days)***
COPPER	S	EPA 6020A	4/29/2014	***Normal (~10 Days)***
LEAD	S	EPA 6020A	4/29/2014	***Normal (~10 Days)***
MERCURY-ICPMS	S	EPA 6020A	4/29/2014	***Normal (~10 Days)***
ZINC	S	EPA 6020A	4/29/2014	***Normal (~10 Days)***

Sample #: 140417045-082 **Customer Sample #:** HA-27(4.5-5)

Recv'd: ☑ **Collector:** **Date Collected:** 4/15/2014
Quantity: 1 **Matrix:** Soil **Date Received:** 4/17/2014 12:00:00 PM
Comment:

Test	Lab	Method	Due Date	Priority
%Moisture	S	%moisture	4/29/2014	***Normal (~10 Days)***
CADMIUM	S	EPA 6020A	4/29/2014	***Normal (~10 Days)***
COPPER	S	EPA 6020A	4/29/2014	***Normal (~10 Days)***
LEAD	S	EPA 6020A	4/29/2014	***Normal (~10 Days)***
MERCURY-ICPMS	S	EPA 6020A	4/29/2014	***Normal (~10 Days)***
ZINC	S	EPA 6020A	4/29/2014	***Normal (~10 Days)***

Preliminary Draft for Agency Review

Customer Name: GEO ENGINEERS
523 E 2ND
SPOKANE WA 99202

Order ID: 140417045
Order Date: 4/17/2014

Contact Name: SCOTT LATHEN
Comment:

Project Name: CLARK FORK RIVER DELTA 15387-014-00

Sample #: 140417045-083 **Customer Sample #:** HA-27(6.5-7)

Recv'd: ☑ **Collector:** **Date Collected:** 4/15/2014
Quantity: 1 **Matrix:** Soil **Date Received:** 4/17/2014 12:00:00 PM
Comment:

Test	Lab	Method	Due Date	Priority
%Moisture	S	%moisture	4/29/2014	***Normal (~10 Days)***
CADMIUM	S	EPA 6020A	4/29/2014	***Normal (~10 Days)***
COPPER	S	EPA 6020A	4/29/2014	***Normal (~10 Days)***
LEAD	S	EPA 6020A	4/29/2014	***Normal (~10 Days)***
MERCURY-ICPMS	S	EPA 6020A	4/29/2014	***Normal (~10 Days)***
ZINC	S	EPA 6020A	4/29/2014	***Normal (~10 Days)***

Sample #: 140417045-084 **Customer Sample #:** HA-28(1.5-2)

Recv'd: ☑ **Collector:** **Date Collected:** 4/16/2014
Quantity: 1 **Matrix:** Soil **Date Received:** 4/17/2014 12:00:00 PM
Comment:

Test	Lab	Method	Due Date	Priority
%Moisture	S	%moisture	4/29/2014	***Normal (~10 Days)***
CADMIUM	S	EPA 6020A	4/29/2014	***Normal (~10 Days)***
COPPER	S	EPA 6020A	4/29/2014	***Normal (~10 Days)***
LEAD	S	EPA 6020A	4/29/2014	***Normal (~10 Days)***
MERCURY-ICPMS	S	EPA 6020A	4/29/2014	***Normal (~10 Days)***
ZINC	S	EPA 6020A	4/29/2014	***Normal (~10 Days)***

Sample #: 140417045-085 **Customer Sample #:** HA-28(4.5-5)

Recv'd: ☑ **Collector:** **Date Collected:** 4/16/2014
Quantity: 1 **Matrix:** Soil **Date Received:** 4/17/2014 12:00:00 PM
Comment:

Test	Lab	Method	Due Date	Priority
%Moisture	S	%moisture	4/29/2014	***Normal (~10 Days)***
CADMIUM	S	EPA 6020A	4/29/2014	***Normal (~10 Days)***
COPPER	S	EPA 6020A	4/29/2014	***Normal (~10 Days)***
LEAD	S	EPA 6020A	4/29/2014	***Normal (~10 Days)***

Preliminary Draft for Agency Review

Customer Name: GEO ENGINEERS
523 E 2ND
SPOKANE WA 99202

Order ID: 140417045
Order Date: 4/17/2014

Contact Name: SCOTT LATHEN
Comment:

Project Name: CLARK FORK RIVER DELTA 15387-014-00

MERCURY-ICPMS	S	EPA 6020A	4/29/2014	***Normal (~10 Days)***
ZINC	S	EPA 6020A	4/29/2014	***Normal (~10 Days)***

Sample #: 140417045-086 **Customer Sample #:** HA-28(6.5-7)

Recv'd: ☑ **Collector:** **Date Collected:** 4/16/2014
Quantity: 1 **Matrix:** Soil **Date Received:** 4/17/2014 12:00:00 PM
Comment:

Test	Lab	Method	Due Date	Priority
%Moisture	S	%moisture	4/29/2014	***Normal (~10 Days)***
CADMIUM	S	EPA 6020A	4/29/2014	***Normal (~10 Days)***
COPPER	S	EPA 6020A	4/29/2014	***Normal (~10 Days)***
LEAD	S	EPA 6020A	4/29/2014	***Normal (~10 Days)***
MERCURY-ICPMS	S	EPA 6020A	4/29/2014	***Normal (~10 Days)***
ZINC	S	EPA 6020A	4/29/2014	***Normal (~10 Days)***

Sample #: 140417045-087 **Customer Sample #:** HA-29(1.5-2)

Recv'd: ☑ **Collector:** **Date Collected:** 4/16/2014
Quantity: 1 **Matrix:** Soil **Date Received:** 4/17/2014 12:00:00 PM
Comment:

Test	Lab	Method	Due Date	Priority
%Moisture	S	%moisture	4/29/2014	***Normal (~10 Days)***
CADMIUM	S	EPA 6020A	4/29/2014	***Normal (~10 Days)***
COPPER	S	EPA 6020A	4/29/2014	***Normal (~10 Days)***
LEAD	S	EPA 6020A	4/29/2014	***Normal (~10 Days)***
MERCURY-ICPMS	S	EPA 6020A	4/29/2014	***Normal (~10 Days)***
ZINC	S	EPA 6020A	4/29/2014	***Normal (~10 Days)***

Sample #: 140417045-088 **Customer Sample #:** HA-29(4.5-5)

Recv'd: ☑ **Collector:** **Date Collected:** 4/16/2014
Quantity: 1 **Matrix:** Soil **Date Received:** 4/17/2014 12:00:00 PM
Comment:

Test	Lab	Method	Due Date	Priority
%Moisture	S	%moisture	4/29/2014	***Normal (~10 Days)***
CADMIUM	S	EPA 6020A	4/29/2014	***Normal (~10 Days)***

Preliminary Draft for Agency Review

Customer Name: GEO ENGINEERS
523 E 2ND
SPOKANE WA 99202

Order ID: 140417045
Order Date: 4/17/2014

Contact Name: SCOTT LATHEN
Comment:

Project Name: CLARK FORK RIVER DELTA 15387-014-00

COPPER	S	EPA 6020A	4/29/2014	***Normal (~10 Days)***
LEAD	S	EPA 6020A	4/29/2014	***Normal (~10 Days)***
MERCURY-ICPMS	S	EPA 6020A	4/29/2014	***Normal (~10 Days)***
ZINC	S	EPA 6020A	4/29/2014	***Normal (~10 Days)***

Sample #: 140417045-089 **Customer Sample #:** HA-29(6.5-7)

Recv'd: ☑ **Collector:** **Date Collected:** 4/16/2014
Quantity: 1 **Matrix:** Soil **Date Received:** 4/17/2014 12:00:00 PM
Comment:

Test	Lab	Method	Due Date	Priority
%Moisture	S	%moisture	4/29/2014	***Normal (~10 Days)***
CADMIUM	S	EPA 6020A	4/29/2014	***Normal (~10 Days)***
COPPER	S	EPA 6020A	4/29/2014	***Normal (~10 Days)***
LEAD	S	EPA 6020A	4/29/2014	***Normal (~10 Days)***
MERCURY-ICPMS	S	EPA 6020A	4/29/2014	***Normal (~10 Days)***
ZINC	S	EPA 6020A	4/29/2014	***Normal (~10 Days)***

Sample #: 140417045-090 **Customer Sample #:** HA-29(9-9.5)

Recv'd: ☑ **Collector:** **Date Collected:** 4/16/2014
Quantity: 1 **Matrix:** Soil **Date Received:** 4/17/2014 12:00:00 PM
Comment:

Test	Lab	Method	Due Date	Priority
%Moisture	S	%moisture	4/29/2014	***Normal (~10 Days)***
CADMIUM	S	EPA 6020A	4/29/2014	***Normal (~10 Days)***
COPPER	S	EPA 6020A	4/29/2014	***Normal (~10 Days)***
LEAD	S	EPA 6020A	4/29/2014	***Normal (~10 Days)***
MERCURY-ICPMS	S	EPA 6020A	4/29/2014	***Normal (~10 Days)***
ZINC	S	EPA 6020A	4/29/2014	***Normal (~10 Days)***

Preliminary Draft for Agency Review

Customer Name: GEO ENGINEERS
523 E 2ND
SPOKANE WA 99202

Order ID: 140417045
Order Date: 4/17/2014

Contact Name: SCOTT LATHEN
Comment:

Project Name: CLARK FORK RIVER DELTA 15387-014-00

Sample #: 140417045-091 **Customer Sample #:** HA-30(1.5-2)

Recv'd: ☑ **Collector:** **Date Collected:** 4/16/2014
Quantity: 1 **Matrix:** Soil **Date Received:** 4/17/2014 12:00:00 PM
Comment:

Test	Lab	Method	Due Date	Priority
%Moisture	S	%moisture	4/29/2014	***Normal (~10 Days)***
CADMIUM	S	EPA 6020A	4/29/2014	***Normal (~10 Days)***
COPPER	S	EPA 6020A	4/29/2014	***Normal (~10 Days)***
LEAD	S	EPA 6020A	4/29/2014	***Normal (~10 Days)***
MERCURY-ICPMS	S	EPA 6020A	4/29/2014	***Normal (~10 Days)***
ZINC	S	EPA 6020A	4/29/2014	***Normal (~10 Days)***

Sample #: 140417045-092 **Customer Sample #:** HA-30(4-4.5)

Recv'd: ☑ **Collector:** **Date Collected:** 4/16/2014
Quantity: 1 **Matrix:** Soil **Date Received:** 4/17/2014 12:00:00 PM
Comment:

Test	Lab	Method	Due Date	Priority
%Moisture	S	%moisture	4/29/2014	***Normal (~10 Days)***
CADMIUM	S	EPA 6020A	4/29/2014	***Normal (~10 Days)***
COPPER	S	EPA 6020A	4/29/2014	***Normal (~10 Days)***
LEAD	S	EPA 6020A	4/29/2014	***Normal (~10 Days)***
MERCURY-ICPMS	S	EPA 6020A	4/29/2014	***Normal (~10 Days)***
ZINC	S	EPA 6020A	4/29/2014	***Normal (~10 Days)***

Sample #: 140417045-093 **Customer Sample #:** HA-30(6.5-7)

Recv'd: ☑ **Collector:** **Date Collected:** 4/16/2014
Quantity: 1 **Matrix:** Soil **Date Received:** 4/17/2014 12:00:00 PM
Comment:

Test	Lab	Method	Due Date	Priority
%Moisture	S	%moisture	4/29/2014	***Normal (~10 Days)***
CADMIUM	S	EPA 6020A	4/29/2014	***Normal (~10 Days)***
COPPER	S	EPA 6020A	4/29/2014	***Normal (~10 Days)***
LEAD	S	EPA 6020A	4/29/2014	***Normal (~10 Days)***

Preliminary Draft for Agency Review

Customer Name: GEO ENGINEERS
523 E 2ND
SPOKANE WA 99202

Order ID: 140417045
Order Date: 4/17/2014

Contact Name: SCOTT LATHEN
Comment:

Project Name: CLARK FORK RIVER DELTA 15387-014-00

MERCURY-ICPMS	S	EPA 6020A	4/29/2014	***Normal (~10 Days)***
ZINC	S	EPA 6020A	4/29/2014	***Normal (~10 Days)***

Sample #: 140417045-094 **Customer Sample #:** HA-31(1.5-2)

Recv'd: ☑ **Collector:** **Date Collected:** 4/16/2014
Quantity: 1 **Matrix:** Soil **Date Received:** 4/17/2014 12:00:00 PM
Comment:

Test	Lab	Method	Due Date	Priority
%Moisture	S	%moisture	4/29/2014	***Normal (~10 Days)***
CADMIUM	S	EPA 6020A	4/29/2014	***Normal (~10 Days)***
COPPER	S	EPA 6020A	4/29/2014	***Normal (~10 Days)***
LEAD	S	EPA 6020A	4/29/2014	***Normal (~10 Days)***
MERCURY-ICPMS	S	EPA 6020A	4/29/2014	***Normal (~10 Days)***
ZINC	S	EPA 6020A	4/29/2014	***Normal (~10 Days)***

Sample #: 140417045-095 **Customer Sample #:** HA-31(2-2.5)

Recv'd: ☑ **Collector:** **Date Collected:** 4/16/2014
Quantity: 1 **Matrix:** Soil **Date Received:** 4/17/2014 12:00:00 PM
Comment:

Test	Lab	Method	Due Date	Priority
%Moisture	S	%moisture	4/29/2014	***Normal (~10 Days)***
CADMIUM	S	EPA 6020A	4/29/2014	***Normal (~10 Days)***
COPPER	S	EPA 6020A	4/29/2014	***Normal (~10 Days)***
LEAD	S	EPA 6020A	4/29/2014	***Normal (~10 Days)***
MERCURY-ICPMS	S	EPA 6020A	4/29/2014	***Normal (~10 Days)***
ZINC	S	EPA 6020A	4/29/2014	***Normal (~10 Days)***

Sample #: 140417045-096 **Customer Sample #:** HA-31(4.5-5)

Recv'd: ☑ **Collector:** **Date Collected:** 4/16/2014
Quantity: 1 **Matrix:** Soil **Date Received:** 4/17/2014 12:00:00 PM
Comment:

Test	Lab	Method	Due Date	Priority
%Moisture	S	%moisture	4/29/2014	***Normal (~10 Days)***
CADMIUM	S	EPA 6020A	4/29/2014	***Normal (~10 Days)***

Preliminary Draft for Agency Review

Customer Name: GEO ENGINEERS
523 E 2ND
SPOKANE WA 99202

Order ID: 140417045
Order Date: 4/17/2014

Contact Name: SCOTT LATHEN
Comment:

Project Name: CLARK FORK RIVER DELTA 15387-014-00

COPPER	S	EPA 6020A	4/29/2014	***Normal (~10 Days)***
LEAD	S	EPA 6020A	4/29/2014	***Normal (~10 Days)***
MERCURY-ICPMS	S	EPA 6020A	4/29/2014	***Normal (~10 Days)***
ZINC	S	EPA 6020A	4/29/2014	***Normal (~10 Days)***

Sample #: 140417045-097 **Customer Sample #:** HA-32(1.5-2)

Recv'd: ☑ **Collector:** **Date Collected:** 4/16/2014
Quantity: 1 **Matrix:** Soil **Date Received:** 4/17/2014 12:00:00 PM
Comment:

Test	Lab	Method	Due Date	Priority
%Moisture	S	%moisture	4/29/2014	***Normal (~10 Days)***
CADMIUM	S	EPA 6020A	4/29/2014	***Normal (~10 Days)***
COPPER	S	EPA 6020A	4/29/2014	***Normal (~10 Days)***
LEAD	S	EPA 6020A	4/29/2014	***Normal (~10 Days)***
MERCURY-ICPMS	S	EPA 6020A	4/29/2014	***Normal (~10 Days)***
ZINC	S	EPA 6020A	4/29/2014	***Normal (~10 Days)***

Sample #: 140417045-098 **Customer Sample #:** HA-32(4.5-5)

Recv'd: ☑ **Collector:** **Date Collected:** 4/16/2014
Quantity: 1 **Matrix:** Soil **Date Received:** 4/17/2014 12:00:00 PM
Comment:

Test	Lab	Method	Due Date	Priority
%Moisture	S	%moisture	4/29/2014	***Normal (~10 Days)***
CADMIUM	S	EPA 6020A	4/29/2014	***Normal (~10 Days)***
COPPER	S	EPA 6020A	4/29/2014	***Normal (~10 Days)***
LEAD	S	EPA 6020A	4/29/2014	***Normal (~10 Days)***
MERCURY-ICPMS	S	EPA 6020A	4/29/2014	***Normal (~10 Days)***
ZINC	S	EPA 6020A	4/29/2014	***Normal (~10 Days)***

Preliminary Draft for Agency Review

Customer Name: GEO ENGINEERS
523 E 2ND
SPOKANE WA 99202

Order ID: 140417045
Order Date: 4/17/2014

Contact Name: SCOTT LATHEN
Comment:

Project Name: CLARK FORK RIVER DELTA 15387-014-00

Sample #: 140417045-099 **Customer Sample #:** HA-32(6.5-7)

Recv'd: ☑ **Collector:** **Date Collected:** 4/16/2014
Quantity: 1 **Matrix:** Soil **Date Received:** 4/17/2014 12:00:00 PM
Comment:

Test	Lab	Method	Due Date	Priority
%Moisture	S	%moisture	4/29/2014	***Normal (~10 Days)***
CADMIUM	S	EPA 6020A	4/29/2014	***Normal (~10 Days)***
COPPER	S	EPA 6020A	4/29/2014	***Normal (~10 Days)***
LEAD	S	EPA 6020A	4/29/2014	***Normal (~10 Days)***
MERCURY-ICPMS	S	EPA 6020A	4/29/2014	***Normal (~10 Days)***
ZINC	S	EPA 6020A	4/29/2014	***Normal (~10 Days)***

Sample #: 140417045-100 **Customer Sample #:** HA-32(9-9.5)

Recv'd: ☑ **Collector:** **Date Collected:** 4/16/2014
Quantity: 1 **Matrix:** Soil **Date Received:** 4/17/2014 12:00:00 PM
Comment:

Test	Lab	Method	Due Date	Priority
%Moisture	S	%moisture	4/29/2014	***Normal (~10 Days)***
CADMIUM	S	EPA 6020A	4/29/2014	***Normal (~10 Days)***
COPPER	S	EPA 6020A	4/29/2014	***Normal (~10 Days)***
LEAD	S	EPA 6020A	4/29/2014	***Normal (~10 Days)***
MERCURY-ICPMS	S	EPA 6020A	4/29/2014	***Normal (~10 Days)***
ZINC	S	EPA 6020A	4/29/2014	***Normal (~10 Days)***

Sample #: 140417045-101 **Customer Sample #:** HA-33(2-2.5)

Recv'd: ☑ **Collector:** **Date Collected:** 4/16/2014
Quantity: 1 **Matrix:** Soil **Date Received:** 4/17/2014 12:00:00 PM
Comment:

Test	Lab	Method	Due Date	Priority
%Moisture	S	%moisture	4/29/2014	***Normal (~10 Days)***
CADMIUM	S	EPA 6020A	4/29/2014	***Normal (~10 Days)***
COPPER	S	EPA 6020A	4/29/2014	***Normal (~10 Days)***
LEAD	S	EPA 6020A	4/29/2014	***Normal (~10 Days)***

Preliminary Draft for Agency Review

Customer Name: GEO ENGINEERS
523 E 2ND
SPOKANE WA 99202

Order ID: 140417045
Order Date: 4/17/2014

Contact Name: SCOTT LATHEN
Comment:

Project Name: CLARK FORK RIVER DELTA 15387-014-00

MERCURY-ICPMS	S	EPA 6020A	4/29/2014	***Normal (~10 Days)***
ZINC	S	EPA 6020A	4/29/2014	***Normal (~10 Days)***

Sample #: 140417045-102 **Customer Sample #:** HA-33(4-4.5)

Recv'd: ☑ **Collector:** **Date Collected:** 4/16/2014
Quantity: 1 **Matrix:** Soil **Date Received:** 4/17/2014 12:00:00 PM
Comment:

Test	Lab	Method	Due Date	Priority
%Moisture	S	%moisture	4/29/2014	***Normal (~10 Days)***
CADMIUM	S	EPA 6020A	4/29/2014	***Normal (~10 Days)***
COPPER	S	EPA 6020A	4/29/2014	***Normal (~10 Days)***
LEAD	S	EPA 6020A	4/29/2014	***Normal (~10 Days)***
MERCURY-ICPMS	S	EPA 6020A	4/29/2014	***Normal (~10 Days)***
ZINC	S	EPA 6020A	4/29/2014	***Normal (~10 Days)***

Sample #: 140417045-103 **Customer Sample #:** HA-33(6.5-7)

Recv'd: ☑ **Collector:** **Date Collected:** 4/16/2014
Quantity: 1 **Matrix:** Soil **Date Received:** 4/17/2014 12:00:00 PM
Comment:

Test	Lab	Method	Due Date	Priority
%Moisture	S	%moisture	4/29/2014	***Normal (~10 Days)***
CADMIUM	S	EPA 6020A	4/29/2014	***Normal (~10 Days)***
COPPER	S	EPA 6020A	4/29/2014	***Normal (~10 Days)***
LEAD	S	EPA 6020A	4/29/2014	***Normal (~10 Days)***
MERCURY-ICPMS	S	EPA 6020A	4/29/2014	***Normal (~10 Days)***
ZINC	S	EPA 6020A	4/29/2014	***Normal (~10 Days)***

Sample #: 140417045-104 **Customer Sample #:** RINSEATE BLANK 1

Recv'd: ☑ **Collector:** **Date Collected:** 4/15/2014
Quantity: 1 **Matrix:** Water **Date Received:** 4/17/2014 12:00:00 PM
Comment:

Test	Lab	Method	Due Date	Priority
CADMIUM	S	EPA 200.8	4/29/2014	***Normal (~10 Days)***
COPPER	S	EPA 200.8	4/29/2014	***Normal (~10 Days)***

Preliminary Draft for Agency Review

Customer Name: GEO ENGINEERS
523 E 2ND
SPOKANE WA 99202

Order ID: 140417045
Order Date: 4/17/2014

Contact Name: SCOTT LATHEN
Comment:

Project Name: CLARK FORK RIVER DELTA 15387-014-00

LEAD	S	EPA 200.8	4/29/2014	***Normal (~10 Days)***
MERCURY-ICPMS	S	EPA 200.8	4/29/2014	***Normal (~10 Days)***
ZINC	S	EPA 200.8	4/29/2014	***Normal (~10 Days)***

Sample #: 140417045-105 **Customer Sample #:** RINSEATE BLANK 2

Recv'd: ☑ **Collector:** **Date Collected:** 4/16/2014
Quantity: 1 **Matrix:** Water **Date Received:** 4/17/2014 12:00:00 PM
Comment:

Test	Lab	Method	Due Date	Priority
CADMIUM	S	EPA 200.8	4/29/2014	***Normal (~10 Days)***
COPPER	S	EPA 200.8	4/29/2014	***Normal (~10 Days)***
LEAD	S	EPA 200.8	4/29/2014	***Normal (~10 Days)***
MERCURY-ICPMS	S	EPA 200.8	4/29/2014	***Normal (~10 Days)***
ZINC	S	EPA 200.8	4/29/2014	***Normal (~10 Days)***

Sample #: 140417045-108 **Customer Sample #:** FIELD BLANK 1

Recv'd: ☑ **Collector:** **Date Collected:** 4/18/2014
Quantity: 1 **Matrix:** Water **Date Received:** 4/17/2014 12:00:00 PM
Comment:

Test	Lab	Method	Due Date	Priority
CADMIUM	S	EPA 200.8	4/29/2014	***Normal (~10 Days)***
COPPER	S	EPA 200.8	4/29/2014	***Normal (~10 Days)***
LEAD	S	EPA 200.8	4/29/2014	***Normal (~10 Days)***
MERCURY-ICPMS	S	EPA 200.8	4/29/2014	***Normal (~10 Days)***
ZINC	S	EPA 200.8	4/29/2014	***Normal (~10 Days)***

Sample #: 140417045-109 **Customer Sample #:** FIELD BLANK 2

Recv'd: ☑ **Collector:** **Date Collected:** 4/18/2014
Quantity: 1 **Matrix:** Water **Date Received:** 4/17/2014 12:00:00 PM
Comment:

Test	Lab	Method	Due Date	Priority
CADMIUM	S	EPA 200.8	4/29/2014	***Normal (~10 Days)***
COPPER	S	EPA 200.8	4/29/2014	***Normal (~10 Days)***
LEAD	S	EPA 200.8	4/29/2014	***Normal (~10 Days)***

Preliminary Draft for Agency Review

Customer Name: GEO ENGINEERS
523 E 2ND
SPOKANE WA 99202

Order ID: 140417045
Order Date: 4/17/2014

Contact Name: SCOTT LATHEN

Project Name: CLARK FORK RIVER DELTA 15387-014-00

Comment:

MERCURY-ICPMS	S	EPA 200.8	4/29/2014	***Normal (~10 Days)***
ZINC	S	EPA 200.8	4/29/2014	***Normal (~10 Days)***

SAMPLE CONDITION RECORD

Samples received in a cooler?	Yes
Samples received intact?	Yes
What is the temperature inside the cooler?	1.6/0.6
Samples received with a COC?	Yes
Samples received within holding time?	Yes
Are all sample bottles properly preserved?	N/A
Are VOC samples free of headspace?	N/A
Is there a trip blank to accompany VOC samples?	N/A
Labels and chain agree?	Yes

Preliminary Draft for Agency Review

USCG0014833/27

Anatek Labs, Inc.

Chain of Custody Record

1282 Alturas Drive, Moscow ID 83843 (208) 883-2839 FAX 882-9246
504 E Sprague Ste D, Spokane WA 99202 (509) 838-3999 FAX 838-4433

Anatek 40417 045 GEOE Last Due 4/29/2014
1st SAMP 4/15/2014 1st RCVD 4/17/2014
CLARK FORK RIVER DELTA

http://www.anateklabs.com/services/guidelines/reporting.asp

Company Name: GeoEngineers, Inc
Address: 523 E 2nd Ave
City: Spokane State: WA Zip: 99202
Phone: 509.363.3125
Fax:

Project Manager: Scott Lathen
Project Name & #: Clark Fork River Delta
Email Address :
Purchase Order #:
Sampler Name & phone:

X Normal
__Next Day*
__2nd Day*
__Other*_____

*All rush order requests must be prior approved.

__Phone
__Mail
__Fax
__Email

Provide Sample Description / List Analyses Requested

Preservative:

Lab ID	Sample Identification	Sampling Date/Time	Matrix	# of Containers	Sample Volume	Cadmium	Copper	Lead	Mercury	Zinc
	HA-1 (1.5-2.0)	04/16/14 1420	S	1	4oz	X				
	HA-1 (4.5-5.0)	04/16/14 1424								
	HA-1 (6.5-7.0)	04/16/14 1430								
	HA-2 (1.5-2.0)	04/16/14 1334								
	HA-2 (4.5-5.0)	04/16/14 1340								
	HA-2 (6.5-7.0)	04/16/14 1345								
	HA-2 (9-9.5)	04/16/14 1350								
	HA-3a (1.5-2)	04/16/14 1239								
	HA-3a (4-4.5)	04/16/14 1248								
	HA-4a (1.5-2)	04/16/14 0947								
	HA-4a (4-4.5)	04/16/14 0955								
	HA-4a (6-6.5)	04/16/14 1008								
	HA-5 (1.5-2)	04/16/14 1357								

	Printed Name	Signature	Company	Date	Time
Relinquished by	Scott Lathen	[signature]	GEI	4/17/14	1200
Received by	Scott	[signature]	Anatek	4/17/14	1200
Relinquished by					
Received by					
Relinquished by					
Received by					

Note Special Instructions/Comments

Inspection Checklist

Received Intact? Y N
Labels & Chains Agree? Y N
Containers Sealed? Y N
VOC Head Space? Y N

hand / 2 Coolers

Temperature (°C): 1.6 / 0.6
Preservative: ice

Date & Time: 4-17-14
Inspected By: KB

Preliminary Draft for Agency Review

USCG00148843/27

Anatek Labs, Inc.

Chain of Custody Record

1282 Alturas Drive, Moscow ID 83843 (208) 883-2839 FAX 882-9246
504 E Sprague Ste D, Spokane WA 99202 (509) 838-3999 FAX 838-4433

40417 045 GEOE Last Due 4/29/2014
1st SAMP 4/15/2014 1st RCVD 4/17/2014
CLARK FORK RIVER DELTA

Company Name: GeoEngineers, Inc.	Project Manager: Scott Latham
Address: 523 E 2nd Ave	Project Name & #: Clark Fork River Delta
City: Spokane State: WA Zip: 99202	Email Address:
Phone: 509.363.3125	Purchase Order #: 15387-014-00
Fax:	Sampler Name & phone:

Please refer to our normal turn around times at: http://www.anateklabs.com/services/guidelines/reporting.asp

X Normal
__Next Day*
__2nd Day*
__Other*_____

*All rush order requests must be prior approved.

__Phone
__Mail
__Fax
__Email

Provide Sample Description / List Analyses Requested

Preservative:

Lab ID	Sample Identification	Sampling Date/Time	Matrix	# of Containers	Sample Volume	Cd	Cu	Pb	Hg	Zn
	HA-5a(3.5-4)	04/16/14 1404	S	1	4oz	X	X	X	X	X
	HA-6(2-2.5)	04/15/14								
	HA-6(4-4.5)	04/15/14								
	HA-6(6-6.5)	04/15/14								
	HA-7(1.5-2)	04/16/14 1005								
	HA-7(4-4.5)	04/16/14 1010								
	HA-7(6-6.5)	04/16/14 1015								
	HA-8(1.5-2)	04/16/14 1152								
	HA-8(4-4.5)	04/16/14 1202								
	HA-8(6-6.5)	04/16/14 1207								
	HA-9(1.5-2)	04/16/14 0907								
	HA-9(4-4.5)	04/16/14 0917								
	HA-9(6-6.5)	04/16/14 0923								

Note Special Instructions/Comments

	Printed Name	Signature	Company	Date	Time
Relinquished by	Scott Latham	[signature]	GEI	4/17/14	1200
Received by	Scott	[signature]	Anatek	4/17/14	1200
Relinquished by					
Received by					
Relinquished by					
Received by					

Inspection Checklist

Received Intact?	Y	N
Labels & Chains Agree?	Y	N
Containers Sealed?	Y	N
VOC Head Space?	Y	N

hand / 2 Coolers

Temperature (°C): 1.6 / 0.6
Preservative: ice

Date & Time: 4-17-14
Inspected By: KLS

Preliminary Draft for Agency Review

USCG00140527

Anatek Labs, Inc.

Chain of Custody Record

1282 Alturas Drive, Moscow ID 83843 (208) 883-2839 FAX 882-9246
504 E Sprague Ste D, Spokane WA 99202 (509) 838-3999 FAX 838-4433

140417 045 GEOE Last Due 4/29/2014
1st SAMP 4/15/2014 1st RCVD 4/17/2014
CLARK FORK RIVER DELTA

Company Name: GeoEngineers, Inc	Project Manager: Scott Lathen
Address: 523 2nd Ave	Project Name & #: Clark Fork River Delta
City: Spokane State: WA Zip: 99202	Email Address:
Phone: 509.363.3125	Purchase Order #:
Fax:	Sampler Name & phone:

Please refer to our normal turn around times at:
http://www.anateklabs.com/services/guidelines/reporting.asp

X Normal
__Next Day*
__2nd Day*
__Other*

*All rush order requests must be prior approved.

__Phone
__Mail
__Fax
__Email

Provide Sample Description / List Analyses Requested

Lab ID	Sample Identification	Sampling Date/Time	Matrix	# of Containers	Sample Volume	Cd	Cu	Pb	Hg	Zn
	HA-10(1.5-2)	04/16/14 1100	S	1	4 oz	X	X	X	X	X
	HA-10(4-4.5)	04/16/14 1109								
	HA-10(6-6.5)	04/16/14 1115								
	HA-10 (7.5-8)	04/16/14 1123								
	HA-11 (1.5-2)	04/15/14 1351								
	HA-11 (4-4.5)	04/15/14 1404								
	HA-11 (4.5-5)	04/16/14 0817								
	HA-12 (1.5-2)	04/16/14 1027								
	HA-12 (4-4.5)	04/16/14 1035								
	HA-12 (5.5-6)	04/16/14 1038								
	HA-13 (1.5-2)	04/15/14 1454								
	HA-13 (4.5-5)	04/15/14 1506								
	HA-14 (1.5-2)	04/15/14 1312								

Preservative:

Note Special Instructions/Comments

	Printed Name	Signature	Company	Date	Time
Relinquished by	Scott Lathen	[signature]	GEI	4/17/14	1200
Received by	Scott	[signature]	Anatek	4/17/14	1200
Relinquished by					
Received by					
Relinquished by					
Received by					

Inspection Checklist

Received Intact? Y N
Labels & Chains Agree? Y N
Containers Sealed? Y N
VOC Head Space? Y N

hand / 2 Coolers

Temperature (°C): 1.6 / 0.6
Preservative: ice

Date & Time: 4-17-14
Inspected By: KJS

Preliminary Draft for Agency Review

3/10

USCG0014863/27

Anatek Labs, Inc.

Chain of Custody Record

1282 Alturas Drive, Moscow ID 83843 (208) 883-2839 FAX 882-9246
504 E Sprague Ste D, Spokane WA 99202 (509) 838-3999 FAX 838-4433

Anatek Log-In: 140417 045 GEOE Last Due 4/29/2014
1st SAMP 4/15/2014 1st RCVD 4/17/2014
CLARK FORK RIVER DELTA

Company Name: GeoEngineers, Inc.	Project Manager: Scott Lathem
Address: 523 E 2nd Ave	Project Name & #: Clark Fork River Delta
City: Spokane State: WA Zip: 99202	Email Address :
Phone: 509.363.3125	Purchase Order #:
Fax:	Sampler Name & phone:

http://www.anatoklabs.com/services/guidelines/reporting.asp

X Normal
__ Next Day*
__ 2nd Day*
__ Other* ____

*All rush order requests must be prior approved.

__ Phone
__ Mail
__ Fax
__ Email

Provide Sample Description / List Analyses Requested

Lab ID	Sample Identification	Sampling Date/Time	Matrix	# of Containers	Sample Volume	Cd	Cu	Pb	Hg	Zn
	HA-14 (4-4.5)	04/15/14 1320	S	1	4oz	X	X	X	X	X
	HA-14 (6-6.5)	04/16/14 0848								
	HA-15 (1.5-2)	04/15/14 0127								
	HA-15 (4-4.5)	04/15/14 1143								
	HA-15 (6-6.5)	04/15/14 1151								
	HA-16 (2-2.5)	04/15/14 1050								
	HA-16 (4-4.5)	04/15/14 1055								
	HA-16 (6.5-7)	04/15/14 1100								
	HA-17 (1.5-2)	04/15/14 1231								
	HA-17 (4-4.5)	04/15/14 1237								
	HA-17 (6-6.5)	04/15/14 1247								
	HA-18 (1.5-2)	04/15/14 1024								
	HA-18 (4-4.5)	04/15/14 1033								

Preservative:

Note Special Instructions/Comments

	Printed Name	Signature	Company	Date	Time
Relinquished by	S. Lathem	[signature]	GEI	4/17/14	1200
Received by	Scott	[signature]	anatek	4/17/14	1200
Relinquished by					
Received by					
Relinquished by					
Received by					

Inspection Checklist

Received Intact?	(Y)	N
Labels & Chains Agree?	(Y)	N
Containers Sealed?	Y	N
VOC Head Space?	Y	N

hand / 2 coolers

Temperature (°C): 1.6 / 0.6
Preservative: ice
Date & Time: 4-17-14
Inspected By: KS

Preliminary Draft for Agency Review

4/10

USCG0014873/27

Anatek Labs, Inc.

Chain of Custody Record

1282 Alturas Drive, Moscow ID 83843 (208) 883-2839 FAX 882-9246
504 E Sprague Ste D, Spokane WA 99202 (509) 838-3999 FAX 838-4433

140417 045 GEOE Last Due 4/29/2014
1st SAMP 4/15/2014 1st RCVD 4/17/2014
CLARK FORK RIVER DELTA

Company Name: GeoEngineers, Inc
Address: 523 E 2nd Ave
City: Spokane State: WA Zip: 99202
Phone: 509.363.3125
Fax:

Project Manager: Scott Lathen
Project Name & #: Clark Fork River Delta
Email Address:
Purchase Order #:
Sampler Name & phone:

Please refer to our normal turn around times at: http://www.anateklabs.com/services/guidelines/reporting.asp

X Normal
__Next Day*
__2nd Day*
__Other*

*All rush order requests must be prior approved.

__Phone
__Mail
__Fax
__Email

Provide Sample Description

List Analyses Requested

Lab ID	Sample Identification	Sampling Date/Time	Matrix	# of Containers	Sample Volume	Cd	Cu	Pb	Hg	Zn
	HA-18 (6-6.5)	04/15/14 1040	S	1	4oz	X	X	X	X	X
	HA-19 (1.5-2)	04/15/14 1058								
	HA-19 (4-4.5)	04/15/14 1106								
	HA-19 (6-6.5)	04/15/14 1111								
	HA-20 (1.5-2)	04/15/14 1122								
	HA-20 (4.5-5)	04/15/14 1125								
	HA-20 (6.5-7)	04/15/14 1131								
	~~HA-21 (1.5-2)~~	~~04/15/14 1156~~								
	HA									

Note Special Instructions/Comments

	Printed Name	Signature	Company	Date	Time
Relinquished by	S. Lathen	[signature]	GEI	4/17/14	1200
Received by	K Scott	[signature]	anatek	4/17	1200
Relinquished by					
Received by					
Relinquished by					
Received by					

Inspection Checklist

Received Intact? Y N
Labels & Chains Agree? Y N
Containers Sealed? Y N
VOC Head Space? Y N
hard / 2 Coolers
Temperature (°C): 1.6 / 0.6
Preservative: ice
Date & Time: 4-17-14
Inspected By: KS

Preliminary Draft for Agency Review

5/10

USCG0014883/27

Anatek Labs, Inc.

Chain of Custody Record

1282 Alturas Drive, Moscow ID 83843 (208) 883-2839 FAX 882-9246
504 E Sprague Ste D, Spokane WA 99202 (509) 838-3999 FAX 838-4433

140417 045 GEOE Last Due 4/29/2014
1st SAMP 4/15/2014 1st RCVD 4/17/2014
CLARK FORK RIVER DELTA

Company Name: GEOENGINEERS INC	Project Manager: SCOTT LATHEN
Address: 523 E 2ND AVE	Project Name & #: CLARK FORK RIVER DELTA
City: SPOKANE State: WA Zip: 99202	Email Address:
Phone:	Purchase Order #:
Fax:	Sampler Name & phone:

...ease refer to our normal turn around times at: http://www.anateklabs.com/services/guidelines/reporting.asp

X Normal
__Next Day*
__2nd Day*
__Other*_____

*All rush order requests must be prior approved.

__Phone
__Mail
__Fax
__Email

Provide Sample Description / List Analyses Requested / Note Special Instructions/Comments

Preservative:

Lab ID	Sample Identification	Sampling Date/Time	Matrix	# of Containers	Sample Volume	Cd	Cu	Hg	Pb	Zn
	HA-21 (1.5-2)	4-15-14 / 1156	SOIL	1	4oz					
	HA-21 (4.5-5)	4-15-14 / 1201		1						
	HA-21 (6.5-7)	4-15-14 / 1210		1						
	HA-21 (9-9.5)	4-15-14 / 1215		1						
	HA-22 (2-2.5)	4-15-14 / 1325		1						

	Printed Name	Signature	Company	Date	Time
Relinquished by	S. Lathen	[signature]	GEI	4/17/14	1200
Received by	K Scott	[signature]	anatek	4/17/14	1200
Relinquished by					
Received by					
Relinquished by					
Received by					

Inspection Checklist

Received Intact?	Y	N
Labels & Chains Agree?	Y	N
Containers Sealed?	Y	N
VOC Head Space?	Y	N

hand/pCoolue

Temperature (°C): 1.6 / 0.6

Preservative: RC

Date & Time: 4-17-14

Inspected By: KTP

Preliminary Draft for Agency Review

6/10

USCG0014893/27

Anatek Labs, Inc.

Chain of Custody Record

1282 Alturas Drive, Moscow ID 83843 (208) 883-2839 FAX 882-9246
504 E Sprague Ste D, Spokane WA 99202 (509) 838-3999 FAX 838-4433

140417 045 GEOE Last Due 4/29/2014
1st SAMP 4/15/2014 1st RCVD 4/17/2014
CLARK FORK RIVER DELTA

Please refer to our names turn around times at:
http://www.anateklabs.com/services/guidelines/reporting.asp

Company Name: GeoEngineers, Inc	Project Manager: Scott Lathen
Address: 523 E. 2nd Ave	Project Name & #: Clark Fork River Delta
City: Spokane State: WA Zip: 99202	Email Address:
Phone:	Purchase Order #:
Fax:	Sampler Name & phone:

X Normal
__ Next Day*
__ 2nd Day*
__ Other* _____

*All rush order requests must be prior approved.

__ Phone
__ Mail
__ Fax
__ Email

Provide Sample Description / List Analyses Requested

Preservative:

Lab ID	Sample Identification	Sampling Date/Time	Matrix	# of Containers	Sample Volume	Cd	Cu	Pb	Hg	Zn
	HA-22 (4.5-5)	4-15-14 / 1331	Soil	1	4oz	X	X	X	X	X
	HA-22 (6.5-7)	4-15-14 / 1341		1						
	HA-23 (1.5-2)	4-15-14 / 1424		1						
	HA-23 (4.5-5)	4-15-14 / 1432		1						
	HA-23 (6.5-7)	4-15-14 / 1437		1						
	HA-24 (1.5-2)	4-15-14 / 1245		1						
	HA-24 (4.5-5)	4-15-14 / 1252		1						
	HA-24 (7-7.5)	4-15-14 / 1256		1						
	HA-25 (2.5-3)	4-15-14 / 1359		1						
	HA-25 (4.5-5)	4-15-14 / 1402		1						
	HA-25 (6.5-7)	4-15-14 / 1407		1						
	HA-25 (8.5-9)	4-15-14 / 1411		1						
	HA-26 (1.5-2)	4-16-14 / 1121		1						

	Printed Name	Signature	Company	Date	Time
Relinquished by	S. Lathen	[signature]	GEI	4/17/14	1200
Received by	Scott	[signature]	Anatek	4/17/14	1200
Relinquished by					
Received by					
Relinquished by					
Received by					

Note Special Instructions/Comments

Inspection Checklist

Received Intact?	Y	N
Labels & Chains Agree?	Y	N
Containers Sealed?	Y	N
VOC Head Space?	Y	N

hand / 2 Coolers

Temperature (°C): 1.6 / 0.6

Preservative: ice

Date & Time: 4-17-14

Inspected By: KPS

Preliminary Draft for Agency Review

7/10

USCG00149032/7

Anatek Labs, Inc.

Chain of Custody Record

1282 Alturas Drive, Moscow ID 83843 (208) 883-2839 FAX 882-9246
504 E Sprague Ste D, Spokane WA 99202 (509) 838-3999 FAX 838-4433

140417 045 GEOE Last Due 4/29/2014
1st SAMP 4/15/2014 1st RCVD 4/17/2014
CLARK FORK RIVER DELTA

Company Name: GEO ENGINEERS INC.	Project Manager: S. Lathen
Address: 523 E. 2ND AVE	Project Name & #: Clark Fork River Delta
City: SPOKANE State: WA Zip: 99202	Email Address:
Phone:	Purchase Order #:
Fax:	Sampler Name & phone:

Please refer to our normal turn around times at: http://www.anateklabs.com/services/guidelines/reporting.asp

X Normal
__ Next Day*
__ 2nd Day*
__ Other*____

*All rush order requests must be prior approved.

__ Phone
__ Mail
__ Fax
__ Email

Provide Sample Description / List Analyses Requested

Preservative:

Lab ID	Sample Identification	Sampling Date/Time	Matrix	# of Containers	Sample Volume	Cd	Cu	Pb	Hg	Zn
	HA-26 (5-5.5)	4-16-14 / 1125	SOIL	1	4oz	X	X	X	X	X
	HA-26 (6.5-7)	4-16-14 / 1128		1						
	HA-26 (9-9.5)	4-16-14 / 1134		1						
	HA-27 (1.5-2)	4-15-14 / 1502		1						
	HA-27 (4.5-5)	4-15-14 / 1506		1						
	HA-27 (6.5-7)	4-15-14 / 1513		1						
	HA-28 (1.5-2)	4-16-14 / 1154		1						
	HA-28 (4.5-5)	4-16-14 / 1159		1						
	HA-28 (6.5-7)	4-16-14 / 1203		1						
	HA-29 (1.5-2)	4-16-14 / 0930		1						
	HA29 (4.5-5)	4-16-14 / 0935		1						
	HA-29 (6.5-7)	4-16-14 / 0941		1						
	HA-29 (9-9.5)	4-16-14 / 0948		1						

	Printed Name	Signature	Company	Date	Time
Relinquished by	S. Lathen	[signature]	GEI	4/17/14	1200
Received by	Scott	[signature]	Anatek	4/17/14	1200
Relinquished by					
Received by					
Relinquished by					
Received by					

Note Special Instructions/Comments

Inspection Checklist

Received Intact? (Y) N
Labels & Chains Agree? (Y) N
Containers Sealed? Y N
VOC Head Space? Y N

2 Coolers hd

Temperature (°C): 1.6 / 0.6
Preservative: ICE

Date & Time: 4-17-14
Inspected By: KB

Preliminary Draft for Agency Review

8/10

USCG0014913/27

Anatek Labs, Inc.

Chain of Custody Record

1282 Alturas Drive, Moscow ID 83843 (208) 883-2839 FAX 882-9246
504 E Sprague Ste D, Spokane WA 99202 (509) 838-3999 FAX 838-4433

140417 045 GEOE Last Due 4/29/2014
1st SAMP 4/15/2014 1st RCVD 4/17/2014
CLARK FORK RIVER DELTA

Company Name: GeoEngineers Inc.
Address: 523 E 2nd Ave
City: Spokane State: WA Zip: 99202
Phone:
Fax:

Project Manager: S. Lathen
Project Name & #: Clark Fork River Delta
Email Address:
Purchase Order #:
Sampler Name & phone:

Please refer to our normal turn around times at: http://www.anateklabs.com/services/guidelines/reporting.asp

X Normal
__Next Day*
__2nd Day*
__Other*_____

*All rush order requests must be prior approved.

__Phone
__Mail
__Fax
__Email

Provide Sample Description / List Analyses Requested

Lab ID	Sample Identification	Sampling Date/Time	Matrix	# of Containers	Sample Volume	Preservative: Cd	Cu	Pb	Hg	Zn
	HA-30 (1.5-2)	4-16-14 / 1042	Soil	1	4oz	✓	✓	✓	✓	✓
	HA-30 (4-4.5)	4-16-14 / 1056	↓	1	↓	↓	↓	↓	↓	↓
	HA-30 (6.5-7)	4-16-14 / 1105	↓	1	↓	↓	↓	↓	↓	↓
	HA-31 (1.5-2)	4-16-14 / 1015	↓	1	↓	↓	↓	↓	↓	↓
	HA-31 (2-2.5)	4-16-14 / 1027	↓	1	↓	↓	↓	↓	↓	↓
	HA-31 (4.5-5)	4-16-14 / 1019	↓	1	↓	↓	↓	↓	↓	↓
	HA-32 (1.5-2)	4-16-14 / 0850	↓	1	↓	↓	↓	↓	↓	↓
	HA-32 (4.5-5)	4-16-14 / 0857	↓	1	↓	↓	↓	↓	↓	↓
	HA-32 (6.5-7)	4-16-14 / 0902	↓	1	↓	↓	↓	↓	↓	↓
	HA-32 (9-9.5)	4-16-14 / 0915	↓	1	↓	↓	↓	↓	↓	↓
	HA-33 (2-2.5)	4-16-14 / 0823	↓	1	↓	↓	↓	↓	↓	↓
	HA-33 (4-4.5)	4-16-14 / 0829	↓	1	↓	↓	↓	↓	↓	↓
	HA-33 (6.5-7)	4-16-14 / 0836	↓	1	↓	↓	↓	↓	↓	↓

Note Special Instructions/Comments

	Printed Name	Signature	Company	Date	Time
Relinquished by	S. Lathen	[signature]	GEI	4/17/14	1200
Received by	Scott	[signature]	Anatek	4/17/14	1200
Relinquished by					
Received by					
Relinquished by					
Received by					

Inspection Checklist

Received Intact? (Y) N
Labels & Chains Agree? (Y) N
Containers Sealed? Y N
VOC Head Space? Y N

2 Coolers / hd

Temperature (°C): 0.6 / 1.6
Preservative: Ice
Date & Time: 4-17-14
Inspected By: KS

Preliminary Draft for Agency Review

9/10

USCG0014923/27

Anatek Labs, Inc.

Chain of Custody Record

1282 Alturas Drive, Moscow ID 83843 (208) 883-2839 FAX 882-9246
504 E Sprague Ste D, Spokane WA 99202 (509) 838-3999 FAX 838-4433

140417 045 GEOE Last Due 4/29/2014
1st SAMP 4/15/2014 1st RCVD 4/17/2014
CLARK FORK RIVER DELTA

Company Name: GEOENGINEERS
Address: 523 E 2ND AVE
City: SPOKANE State: WA Zip: 99202
Phone:
Fax:

Project Manager: S. Lathen
Project Name & #: Clark Fork River Delta
Email Address:
Purchase Order #:
Sampler Name & phone:

Please refer to our normal turn around times at: http://www.anateklabs.com/services/guidelines/reporting.asp

X Normal
__Next Day*
__2nd Day*
__Other*_____

*All rush order requests must be prior approved.

__Phone
__Mail
__Fax
__Email

Provide Sample Description / List Analyses Requested

Lab ID	Sample Identification	Sampling Date/Time	Matrix	# of Containers	Sample Volume	Cd	Cu	Pb	Hg	Zn
	RINSEATE BLANK 1	4-15-14 / 1705	H_2O	1	250	↓	↓	↓	↓	↓
	RINSEATE BLANK 2	4-16-14 / 1805	H_2O	1	↓	↓	↓	↓	↓	↓
	FIELD BLANK 1	4-15-14 / 1700	H_2O	1	↓	↓	↓	↓	↓	↓
	FIELD BLANK 2	4-16-14 / 1800	H_2O	1	↓	↓	↓	↓	↓	↓

Note Special Instructions/Comments

Inspection Checklist

Received Intact? (Y) N
Labels & Chains Agree? (Y) N
Containers Sealed? Y N
VOC Head Space? Y N

2 Coolers/hd

Temperature (°C): 0.6 / 1.6
Preservative: ICE
Date & Time: 4-17-14
Inspected By: KTS

	Printed Name	Signature	Company	Date	Time
Relinquished by	S. Lathen	[signature]	GEI	4/17/14	1200
Received by	Scott	[signature]	Anatek	4/17/14	1200
Relinquished by					
Received by					
Relinquished by					
Received by					

Preliminary Draft for Agency Review

10/10

APPENDIX C
Sediment Evaluation Framework, Selected Sections

Preliminary Draft for Agency Review

Table 7-1. Sediment Quality Guidelines for Standard Chemicals of Concern

		Marine				Interim Freshwater	
Chemical	**CAS (1) Number**	**SL1 (dry weight**	**SL2 (dry weight)**	**SL1 (3) (mg/kg-OC)**	**SL2 (3) (mg/kg-OC)**	**SL1 (dry weight**	**SL2 (dry weight)**
Metals (mg/kg)							
Antimony	7440-36-0	150	150				
Arsenic	7440-38-2	57	93			20	51
Cadmium	7440-43-9	5.1	6.7			1.1	1.5
Chromium	7440-47-3	260	270			95	100
Copper	7440-50-8	390	390			80	830
Lead	7439-92-1	450	530			340	430
Mercury	7439-97-6	0.41	0.59			0.28	0.75
Nickel	7440-02-0	---	---			60	70
Silver	7440-22-4	6.1	6.1			2.0	2.5
Zinc	7440-66-6	410	960			130	400
Polynuclear Aromatic Hydrocarbons (µg/kg)							
Total LPAH	---	5,200	5,200	370	780	6,600	9,200
Naphthalene	91-20-3	2,100	2,100	99	170	500	1,300
Acenaphthylene	208-96-8	560	1,300	66	66	470	640
Acenaphthene	83-32-9	500	500	16	57	1,100	1,300
Fluorene	86-73-7	540	540	23	79	1,000	3,000
Phenanthrene	85-01-8	1,500	1,500	100	480	6,100	7,600
Anthracene	120-12-7	960	960	220	1,200	1,200	1,600
2-Methylnaphthalene	91-57-6	670	670	38	64	470	560
Total HPAH	---	12,000	17,000	960	5,300	31,000	55,000
Fluoranthene	206-44-0	1,700	2,500	160	1,200	11,000	15,000
Pyrene	129-00-0	2,600	3,300	1,000	1,400	8,800	16,000
Benz(a)anthracene	56-55-3	1,300	1,600	110	270	4,300	5,800
Chrysene	218-01-9	1,400	2,800	110	460	5,900	6,400
Benzofluoranthenes (b+k)	205-99-2	3,200	3,600	230	450	600	4,000
	207-08-9						
Benzo(a)pyrene	50-32-8	1,600	1,600	99	210	3,300	4,800
Indeno(1,2,3-c,d)pyrene	193-39-5	600	690	34	88	4,100	5,300
Dibenz(a,h)anthracene	53-70-3	230	230	12	33	800	840
Benzo(g,h,i)perylene	191-24-2	670	720	31	78	4,000	5,200
Chlorinated Hydrocarbons (µg/kg)							
1,4-Dichlorobenzene	106-46-7	110	110	3.1	9		
1,2-Dichlorobenzene	95-50-1	35	50	2.3	2.3		
1,2,4-Trichlorobenzene	120-82-1	31	51	0.81	1.8		
Hexachlorobenzene	118-74-1	22	70	0.38	2.3		

Preliminary Draft for Agency Review

Table 7-1. Sediment Quality Guidelines for Standard Chemicals of Concern (continued)

		Marine				Freshwater	
Chemical	**CAS[1/] Number**	**SL1 (dry weight)**	**SL2 (dry weight)**	**SL1[2/] (mg/kg-OC)**	**SL[2/] (mg/kg-OC)**	**SL1 (dry weight)**	**SL2 (dry weight)**
Phthalates (ug/kg)							
Dimethyl phthalate	131-11-3	71	160	53	53	46	440
Diethyl phthalate	84-66-2	200	200	61	110		
Di-n-butyl phthalate	84-74-2	1,400	1,400	220	1,700		
Butyl benzyl phthalate	85-68-7	63	900	4.9	64	260	370
Bis(2-ethylhexyl) phthalate	117-81-7	1,300	1,900	47	78	220	320
Di-n-octyl phthalate	117-84-0	6,200	6,200	58	4,500	26	45
Phenols (µg/kg)							
Phenol	108-95-2	420	1,200				
2-Methylphenol	95-48-7	63	63				
4-Methylphenol	106-44-5	670	670				
2,4-Dimethylphenol	105-67-9	29	29				
Pentachlorophenol	87-86-5	400	690				
Miscellaneous Extractables (µg/kg)							
Benzyl alcohol	100-51-6	57	73				
Benzoic acid	65-85-0	650	650				
Dibenzofuran	132-64-9	540	540	15	58	400	440
Hexachlorobutadiene	87-68-3	11	120	3.9	6.2		
N-Nitrosodiphenylamine	86-30-6	28	40	11	11		
Pesticides (µg/kg)							
p,p'-DDE	72-54-8	16					
p,p'-DDD	72-55-9	9					
p,p'-DDT	50-29-3	34					
Aldrin	309-00-2						
alpha-Chlordane	12789-03-6						
Dieldrin	60-57-1						
Heptachlor	76-44-8						
gamma-BHC (Lindane)	58-89-9						
Total PCBs	---	130	1,000	12	65	60	120
Tributyltin[3/]							
TBT pore water (µg/L)	56573-85-4	0.15	---				
TBT dry weight (µg/kg ion)		---	---			75	75

Notes:
1/ CAS = Chemical Abstract Service Registry Number
2/ Screening levels are normalized by the fraction of organic carbon, expressed as mg/kg-OC.
3/ Tributyltin is a Chemical of Special Concern, not a Standard List Chemical of Concern. See *Testing, Reporting, and Evaluation of Tributyltin Data in PSDDA and SMS Programs* at URL http://www.nws.usace.army.mil/dmmo/8th_arm/tbt_96.htm
--- = No numerical criterion for this chemical
µg/kg = micrograms per kilogram
µg/L = micrograms per liter
mg/kg = milligrams per kilogram

Preliminary Draft for Agency Review

CHAPTER 9. DISPOSAL ALTERNATIVES EVALUATION

9.1. INTRODUCTION

The need for a conceptual site model (CSM) and sampling and analysis procedures to enable sound management decisions were discussed in previous chapters. This chapter discusses dredged material disposal site identification to further focus data collection and evaluation to ensure the characterization is adequate to meet disposal objectives. This chapter is not intended to evaluate disposal options or make engineering recommendations, but rather to introduce the reader to the potential options and concepts that govern their use. The Corps and EPA have written many guidance documents on disposal and the factors that need to be evaluated to determine the best disposal option. Refer to the Dredging Operations and Technical Support Program (DOTS) website located at http://el.erdc.usace.army.mil/dots/ for guidance documents and publications.

Dredging for maintenance of navigational depths, deepening of berthing areas, or removal of contaminated sediments is typically conducted in urban areas where a general understanding of the sediment quality is known. While the majority of dredged materials are considered acceptable for a wide range of disposal alternatives, contaminant levels in some sediment have produced concern that dredged material disposal, especially in open waters, floodplains, and wetlands may adversely affect water quality and aquatic life (PIANC 1990). Determining a disposal option can be one of the most costly, time-consuming, and controversial aspects of the project. Thus, having at least an initial understanding of the preferred disposal alternative will be valuable during the characterization and permitting process.

Understanding the requirements of the proposed disposal location is an important step to include in the CSM because sediment evaluation should always have a clearly defined purpose and objective(s). To assist in this evaluation, many agencies like the Corps and EPA and technical subcommittees like the Permanent International Association of Navigation Congresses (PIANC) have developed comprehensive, yet simplified approaches to the identification, development, evaluation, and selection of environmentally and economically preferable alternatives for the handling and treatment of dredged material. The following sections summarize the likely alternatives for dredged material disposal, and discuss much of the relevant information needed to assess and develop dredged material disposal alternatives.

9.2. OVERVIEW OF DREDGED MATERIAL DISPOSAL OPTIONS

The removal, transport, and placement of dredged sediments are the primary components of the "dredging process." Each part of the process must be closely coordinated to ensure a successful dredging operation (EPA/Corps 2004). Planning for maintenance dredging projects involving uncontaminated sediment can be quite different than planning for a project involving contaminated sediments. The main goal of a maintenance dredging project is to remove sediment to navigational depth and most of the planning tends to be directed to meeting this goal. The main goal for contaminated sediment dredging projects is usually the improvement and protection of the environment, as well as navigation. Therefore, managers for these projects are often forced to plan for all situations to be discussed with the regulatory and scientific community.

The primary disposal options in the Pacific Northwest are shown below. Other management options may also exist (e.g., natural recovery), but are not discussed in detail in this chapter.

Preliminary Draft for Agency Review

- Unconfined Open Water
- Beneficial Use (see Chapter 12 for additional details)
- Confined In-water (Capping)
  - Thin Cap
  - Thick Cap
- Dredging with Confined Disposal
  - Confined Aquatic Disposal
  - Nearshore Fill
- Upland Disposal

Permitting and regulatory requirements for these various options vary from state to state, and between options. It is beyond the scope of this manual to detail regulations and permitting requirements for each of these options. Applicants should coordinate with their federal and/or state agency contacts to determine what regulations apply and what permits may be required. However, any discharge of dredged or fill material (all in-water disposal options) into waters of the United States will require authorization under Section 404 of the Clean Water Act (CWA), which will also require a Section 401 water quality certification.

9.3. Disposal Options for Uncontaminated Sediments

9.3.1. Unconfined Open-water Disposal

Open-water disposal is the placement of dredged material in rivers, lakes, estuaries, or oceans via pipeline dredging or release from a hopper dredge or barge. Dredged material can be placed in an approved open-water site using direct pipeline discharge, direct mechanical placement, or release from hopper dredges. Open-water disposal sites can be either predominantly nondispersive or dispersive. At nondispersive sites, most of the material is intended to remain on the bottom following placement. At dispersive sites, material may be dispersed either during placement or eroded from the bottom over time by current and/or wave action.

In some non-ocean waters and waters subject to the CWA, there may be interagency selected, operated, and monitored dredged material disposal sites. In Washington, the Puget Sound Dredged Disposal Analysis (PSDDA) agencies are responsible for certain sites. Locations and disposal site descriptions for these sites in Puget Sound are available at http://www.nws.usace.army.mil/PublicMenu/Menu.cfm?sitename=DMMO&pagename=Users_Manual.

9.3.2. Ocean Disposal

In 1972, Congress enacted the MPRSA to prohibit the dumping of material into the ocean that would unreasonably degrade or endanger human health or the marine environment. Virtually all material that is ocean dumped today is dredged material (sediments) removed from the bottom of water bodies in order to maintain navigation channels and berthing areas.

Ocean dumping of dredged material cannot occur unless a site is either selected temporarily by the Corps or permanently designated by EPA. For the transport of dredged material to an ocean disposal site, a permit is issued by the Corps, with EPA's concurrence, under the MPRSA. Permitting and site selection using EPA's environmental criteria are subject to EPA's concurrence.

Preliminary Draft for Agency Review

For all other types of materials (non-dredged material, vessels, fish waste, etc.), EPA is the permitting agency for ocean dumping and is responsible for designating ocean dumping sites.

The criteria and procedures for ocean dumping permits for dredged material are covered by EPA's ocean dumping regulations at 40 CFR Parts 220 to 229. These regulations also cover the criteria and procedures for designation and management of ocean dumping sites.

All proposed dredged material disposal activities regulated by the MPRSA and CWA must also comply with the applicable requirements of NEPA and its implementing regulations. In addition to the MPRSA, CWA, and NEPA, many federal laws, executive orders, policies, and guidance must be considered, as well as state environmental laws and regulations.

The geographical jurisdictions of the MPRSA and CWA are shown in Figure 2-1. As shown in this figure, an overlap of jurisdiction exists within the territorial sea. The regulatory guidelines for the specification of disposal sites for dredged or fill material lying inside of the baseline from which the territorial sea is measured, or into the territorial sea, are found at 40 CFR 230.2(b) and 33 CFR 336.0(b). The discharge of dredged material into the territorial sea is governed under MPRSA and the regulatory criteria at 40 CFR parts 220 to 228. In general, dredged material discharged as a structure or fill (e.g., beach nourishment, island creation, or underwater berms) and placed within the territorial sea is evaluated under the CWA and applicable state laws and regulations, while material disposed within the territorial sea as a "wasting" action is evaluated under the MPRSA.

The EPA-designated ocean dredged material disposal sites in the region are codified at 40 CFR 228.15(n). Coordinates for these ocean disposal sites, as well as restrictions and conditions for their use, are listed in that section. The use of EPA-designated dredged material disposal sites are further governed by site management and monitoring plans.

9.4. Disposal Options for Contaminated Sediments

Identification of reasonable disposal sites for contaminated sediments must take into account scientific methods that evaluate multiple criteria, including ecologic, geologic, hydrogeologic, economic, social, and other factors. The CWA and MPRSA generally prohibit the disposal of contaminated material into ocean waters (ocean waters are those waters seaward of the baseline). Contaminated sediment disposal regulations generally apply to the assessment of contaminated sediment and potential disposal scenarios in non-ocean waters, and they may differ for each state within EPA Region 10. Coordination with the appropriate state and federal agencies will be needed. Contaminated sediments can be removed by dredging, either through mechanical means (i.e., clamshell) or with suction (i.e., hydraulic cutterhead dredge).

9.4.1. Confined In-water Disposal (Capping)

The principle behind confined in-water disposal (capping) is that when the sediments are capped, the contaminants will no longer be bioavailable or transferred within the environment (Palermo et al., 1998). Capping may be considered as an option when the costs of removal are deemed greater than the benefit, and navigation depths are not of primary concern. There are two types of caps:

- Thin Cap. A thin cap typically occurs in areas with lower sediment contamination and consists of clean sands/silts less than 3 feet thick without armoring.

Preliminary Draft for Agency Review

- Thick Cap. A thick cap typically occurs in areas with greater sediment contamination and consists of clean sands/silts greater than 3 feet thick with armoring to protect from scouring.

9.4.1.1. Capping Benefits

Capping is one method to isolate contaminated sediment from the surrounding aquatic environment. Chemical contamination is isolated from the environment. Over time, and coupled with successful source control, the waterways can be expected to constitute much-improved habitat for invertebrates, fish, and birds.

9.4.1.2. Thin Cap

Thin capping, also known as enhanced natural recovery, is often used where hazards presented by contaminated sediment to human health and the environment is low. Thin capping improves the chemical or physical properties of the upper sediment bed, which constitute the biologically active zone. Thin capping typically has a target thickness of 3 feet or less and is used in low-energy environments. The cap material would be determined during design. The added material supplements natural sedimentation and enhances the natural recovery process, producing variation in the coverage depths and allowing for considerable mixing between the contaminated and clean layers. The result is a sediment bed consisting of mounds of clean material and areas where no cap is evident. Enhanced natural recovery has been successfully applied to the West Harbor Operable Unit of the Wyckoff/Eagle Harbor Superfund Site located off Bainbridge Island, Washington (see EPA website at http://cfpub.epa.gov/supercpad/cursites/csitinfo.cfm?id=1000612).

9.4.1.3. Thick Cap

Placement of a thick cap over a problem area is intended to effectively contain and isolate the contaminated sediments from the benthic community in surface sediments, overlying water column and habitat. In navigation areas where the total thickness of contaminated sediment is not removed, a thick cap could be placed over the dredged area. The cap needs to be thick enough to resist erosion from mechanical scour, wave action, or burrowing organisms. In addition, the cap needs to be designed to prevent contaminant migration through the cap into the surrounding water body. Minimum cap thickness is developed in the engineering evaluation, but it is typically greater than 3 feet. The most common type of capping material is a dredged sand or upland sand. Placement of a thick cap in areas where it would raise the channel bottom above the required navigational depth would require modification of the navigation channel or limiting the size of ships and vessel traffic.

The potential for scour (e.g., boat scour, tidal or river fluctuations, and erosive outfall discharges) may require the placement of armoring. Armoring typically consists of quarry spalls or light, loose riprap obtained from an upland quarry or pit. A filter material may be required between the cap and armor layers to prevent the armor from sinking into the cap.

9.4.2. Confined Aquatic Disposal

Confined aquatic disposal (CAD) is defined as placing sediments in an existing subaquatic pit or excavated pit and capping it with a thick cap section. The primary long-term contaminant transport pathway for a CAD is contaminant migration through the cap and re-exposure of contaminants to the aquatic environment. This can occur through contaminant migration, bioturbation, or cap erosion. Thus, a CAD may be of limited value in areas where future dredging would disturb the site

Preliminary Draft for Agency Review

or where currents, wave climate, and/or physical disturbance by navigation (e.g., anchor dragging or propeller wash) could impact the cap. The primary design components of a CAD are the physical (i.e., thickness and gradation) and chemical quality of the cap, depth, topography, and currents at the site. A CAD can be built without a net loss of habitat and in some instances, a net gain.

9.4.3. Nearshore Confined Disposal Facility

A nearshore confined disposal facility (CDF) typically involves placing the sediments designated for confinement in the shallow subtidal/intertidal environment surrounded by an engineered structure (berm or dike) for containment of dredged material. The confinement dikes or structures in a CDF enclose the disposal area above any adjacent water surface, isolating the dredged material from adjacent waters during placement (Figure 9-1). In this document, nearshore confined disposal does not refer to subaquatic capping or CAD.

Figure 9-1. Upland and Nearshore Confined Disposal Facilities

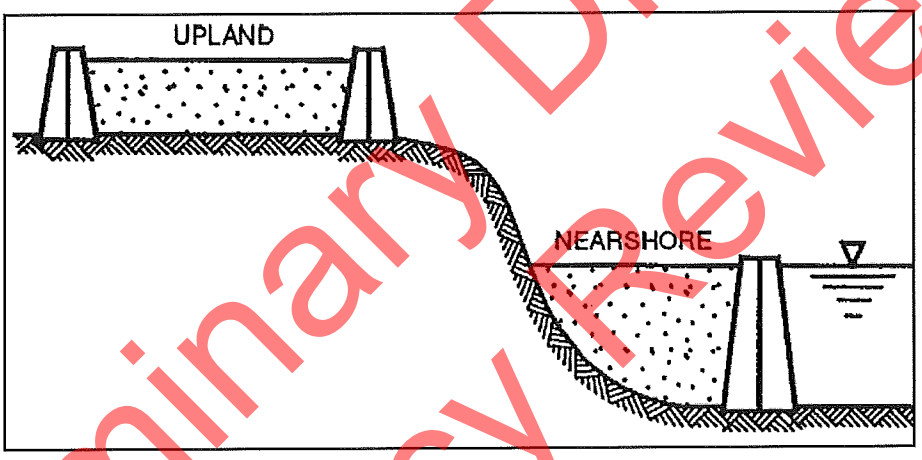

Nearshore confined disposal facilities provide an opportunity to confine the dredged material and incorporate development of upland areas to improve berthing areas. Filling a basin with dredged sediment must consider the potential effects on existing structures in the adjacent upland area because the weight of the fill could cause compression of underlying and immediately adjacent soils. The result could be settlement of the upland ground surface in the vicinity of the filled area. Existing structures in the immediate area that are pile-supported could experience a lesser degree of settlement, primarily resulting from compression that occurs in soils underlying the pile tips, as well as down-drag of compressing soils along the pile sides.

Nearshore confined disposal facilities may result in a net loss of aquatic habitat that may require mitigation. Management options may be needed to meet the requirements of direct physical impacts and CDF site capacity. These options involve dewatering, consolidating, or reducing the size of dredge, or enlarging the site by previous excavation, higher dikes, or larger area. Geotechnical considerations also need to be taken into account if the site is going to be used as a berthing area or shore-side facility. Permits may be challenging to obtain, with the primary issues being loss of habitat and mixing zones. Oregon requires a solid waste disposal permit or permit exemption for disposal or placement of dredge sediment in a nearshore or upland confined disposal site.

Preliminary Draft for Agency Review

9.4.4. Upland Disposal

Upland disposal facilities can include either existing municipal landfills (mixed), or on-site monofills that are dedicated solely to the sediment remediation project. For either type of landfill, the sediments would need to be hauled to the site via a truck or hydraulic line with effluent discharge back to the water body, and subsequent dewatering would be required.

9.4.4.1. Solid Waste Landfills

Existing solid waste landfills may accept contaminated sediments, as long as those sediments do not designate as hazardous waste. Sediments that are hazardous waste must be sent to a Subtitle C landfill. These landfills have evaluation methods, acceptance criteria, and standards for transport and disposal. Landfill operators should be contacted directly to determine sampling, testing, and reporting requirements. Existing landfills have means and methods to handle the sediments and ameliorate the potential contaminant transport pathways.

9.4.4.2. Upland Confined Disposal Facilities

Upland CDFs are defined as disposal facilities that are developed on site or adjacent to the dredge location where the project proponent has responsibility for the development and management of the facility. The main challenge of a CDF is to eliminate contaminant transport pathways. Primary pathways for short-term contaminant transport are loss to the water column during transport, rehandling, and dewatering at the upland disposal site. The primary long-term transport pathway is loss through the containment media (dike material, liners, or ground surface). Upland disposal can be turned into a benefit by filling low spots or capping other more contaminated soils and then sequestering the sediments by placing a permanent cap (e.g. asphalt), thus allowing use of the remediated site.

In the state of Washington, upland disposal facilities need to be designed and constructed in accordance with current state solid waste regulations. Oregon requires that upland disposal facilities receive a solid waste disposal permit or permit exemption for disposal or placement of dredge sediment at an upland site. Design and construction requirements will be addressed through Oregon's solid waste permit.

Characteristics used to evaluate upland disposal sites include the following:

- Site configuration and access;
- Topography, runoff patterns, and adjacent drainage;
- Groundwater levels, flow, and direction;
- Soil properties;
- Design and construction characteristics such as structural integrity and slope stability to prevent any leaching, migration, washout, seeps, capping or other means of preventing contaminant transport and exposure to contaminants; and
- Proximity to ecologically sensitive areas and/or human resources.

Preliminary Draft for Agency Review

9.5. Other Management Options

Natural Recovery. Natural recovery of contaminated sediment may occur over time through a combination of several processes, including chemical degradation, diffusion from the sediment matrix into the water column, burial of contaminated sediment under newly deposited clean material, and mixing of contaminated sediment with clean sediments above and below through bioturbation. Models are often used to predict natural recovery within a given time frame. A monitoring program verifies natural recovery.

The suitability for natural recovery is a function of many factors, including the contaminant type, enrichment ratio, sedimentation rate, source inputs, currents, and mudline slope. Natural recovery can be a relatively cost-effective remedial solution for areas in which low to moderate enrichment ratios are predicted to reduce over time to below the defined sediment quality objectives based on modeling. However, in more highly contaminated sediments, natural recovery or enhanced natural recovery may not successfully remediate the sediment to below the sediment quality objective within a negotiated time frame, so more active remedial methods need to be considered.

Preliminary Draft for Agency Review

APPENDIX D
Report Limitations and Guidelines for Use

Preliminary Draft for Agency Review

APPENDIX D
REPORT LIMITATIONS AND GUIDELINES FOR USE

This appendix provides information to help you manage your risks with respect to the use of this report.

Read These Provisions Closely

Some clients, design professionals and contractors may not recognize that the geoscience practices (geotechnical engineering, geology and environmental science) are far less exact than other engineering and natural science disciplines. This lack of understanding can create unrealistic expectations that could lead to disappointments, claims and disputes. GeoEngineers includes these explanatory "limitations" provisions in our reports to help reduce such risks. Please confer with GeoEngineers if you are unclear how these "Report Limitations and Guidelines for Use" apply to your project or site.

Environmental Services Are Performed for Specific Purposes, Persons and Projects

GeoEngineers has performed this sediment assessment of the site located at the Clark Fork River Delta in Bonner County, Idaho in general accordance with the scope and limitations of our Revised Proposal dated April 3, 2014. This report has been prepared for the exclusive use of Ducks Unlimited. This report is not intended for use by others, and the information contained herein is not applicable to other properties.

GeoEngineers structures our services to meet the specific needs of our clients. For example, an environmental site assessment study conducted for a property owner may not fulfill the needs of a prospective purchaser of the same property. Because each environmental study is unique, each environmental report is unique, prepared solely for the specific client and project property. This report should not be applied for any purpose or project except the one originally contemplated.

This Environmental Report Is Based on a Unique Set of Project-Specific Factors

GeoEngineers considered a number of unique, project-specific factors when establishing the scope of services for this project and report. Unless GeoEngineers specifically indicates otherwise, do not rely on this report if it was:

- not prepared for you,
- not prepared for your project,
- not prepared for the specific property explored, or
- completed before important project changes were made.

If important changes are made to the project or subject property after the date of this report, GeoEngineers should be retained to review our interpretations and recommendations and to provide written modifications or confirmation, as appropriate.

Preliminary Draft for Agency Review

Reliance Conditions for Third Parties

Our report was prepared for the exclusive use of Ducks Unlimited. No other party may rely on the product of our services unless we agree in advance to such reliance in writing. This is to provide our firm with reasonable protection against open-ended liability claims by third parties with whom there would otherwise be no contractual limits to their actions. Within the limitations of scope, schedule and budget, our services have been executed in accordance with our Agreement with the Client and generally accepted environmental practices in this area at the time this report was prepared.

Environmental Regulations Are Always Evolving

Some substances may be present in the vicinity of the subject property in quantities or under conditions that may have led, or may lead, to contamination of the subject property, but are not included in current local, state or federal regulatory definitions of hazardous substances or do not otherwise present current potential liability. GeoEngineers cannot be responsible if the standards for appropriate inquiry, or regulatory definitions of hazardous substance, change or if more stringent environmental standards are developed in the future.

Property Conditions Can Change

This environmental report is based on conditions that existed at the time the study was performed. The findings and conclusions of this report may be affected by the passage of time, by events such as a change in property use or occupancy, or by natural events, such as floods, earthquakes, slope instability or groundwater fluctuations. If any of the described events may have occurred, please contact GeoEngineers before applying this report so that we may evaluate whether changed conditions affect the continued reliability or applicability of our conclusions and recommendations.

Geotechnical, Geologic and Environmental Reports Should Not Be Interchanged

The equipment, techniques and personnel used to perform an environmental study differ significantly from those used to perform a geotechnical or geologic study and vice versa. For that reason, a geotechnical engineering or geologic report does not usually relate any environmental findings, conclusions or recommendations; e.g., about the likelihood of encountering underground storage tanks or regulated contaminants. Similarly, environmental reports are not used to address geotechnical or geologic concerns regarding a specific project.

Do Not Redraw the Exploration Logs

Environmental scientists prepare final boring and testing logs based upon their interpretation of field logs and laboratory data. To prevent errors or omissions, the logs included in an environmental report should never be redrawn for inclusion in other design drawings. Only photographic or electronic reproduction is acceptable, but recognize that separating logs from the report can elevate risk.

Soil End Use

The cleanup levels referenced in this report are site- and situation-specific. The cleanup levels may not be applicable for other sites or for other on-site uses of the affected media. Note that hazardous substances may be present in some of the site soil and/or groundwater at detectable

Preliminary Draft for Agency Review

concentrations that are less than the referenced cleanup levels. GeoEngineers should be contacted prior to the export of soil or groundwater from the subject site or reuse of the affected media on site to evaluate the potential for associated environmental liabilities. We cannot be responsible for potential environmental liability arising out of the transfer of soil and/or groundwater from the subject site to another location or its reuse on site in instances that we were not aware of or could not control.

Most Environmental Findings Are Professional Opinions

Our interpretations of subsurface conditions are based on field observations and chemical analytical data from widely spaced sampling locations at the site. Site exploration identifies subsurface conditions only at those points where subsurface tests are conducted or samples are taken. GeoEngineers reviewed field and laboratory data and then applied our professional judgment to render an opinion about subsurface conditions throughout the site. Actual subsurface conditions may differ – sometimes significantly – from those indicated in this report. Our report, conclusions and interpretations should not be construed as a warranty of the subsurface conditions.

Preliminary Draft for Agency Review

Preliminary Draft for Agency Review

Have we delivered World Class Client Service?

Please let us know by visiting **www.geoengineers.com/feedback**.

GeoEngineers

USCG0015083/27

Preliminary Draft for Agency Review

www.geoengineers.com

GeoEngineers

Appendix H

Bull Trout Exposure Effect Matrix Table

Preliminary Draft for Agency Review

Bull Trout Exposure and Response Matrix

Action	Exposure					Response to Stressor	Minimization Measures	Resulting Effects of the Action
	Stressor	When	Duration	Frequency	Life History Form			
Construction Activities								
Vibratory Pile Driving – all locations	Increased underwater sound pressure levels (SPLs)	During construction	Temporary; approx. 2years	Daily; estimated up to six hours per day	Sub-adults (1-3 years old); Adults	Temporary avoidance of the immediate area	None proposed	Slower rise times are not likely to cause injury to sub-adult or adults.
Impact Pile Driving – Sand Ck Bridge 3.1 Temporary Work Bridge	Increased underwater SPLs	During construction	Temporary; approx. 1 month	Estimated up to four hours each day that piles are being installed	Sub-adults; Adults	Dependent on noise magnitude and project-specific conditions; may range from: -avoidance or temporary displacement -fatal injury or permanent auditory tissue damage -auditory masking or temporary hearing effects may increase risk of predation and/or decrease foraging efficiency due to decreased ability to sense predators and/or prey -startle and flight/habitat avoidance leading to decreased growth and fitness.	Limit pile driving to winter pool/low-water conditions since sound does not propagate well in shallow water. Primarily use vibratory pile driving; limit impact hammer use 20-50 strikes per pile and limit to 10 of 48 piles. Use initial dispersal strike to minimize potential for fish to be in vicinity when production pile driving occurs. Work during daylight hours on weekdays.	Likelihood of exposure limited to areas where sound may propagate into LPO. May cause avoidance of foraging areas in LPO.
Impact Pile Driving – LPO Bridge 3.9 Temporary Work Bridge	Increased SPLs	During construction	Temporary; approx. 1 year	Estimated up to four hours each day that piles are being installed	Sub-adults; Adults	Dependent on noise magnitude and project-specific conditions; may range from: -fatal injury or permanent auditory tissue damage -auditory masking or temporary hearing effects may increase risk of predation and/or decrease foraging efficiency due to decreased ability to sense predators and/or prey -startle and flight/habitat avoidance leading to decreased growth and fitness.	Primarily use vibratory pile driving; limit impact hammer use to 20-50 strikes per pile and limit to 76 of 700 piles. Use initial dispersal strike to minimize potential for fish to be in vicinity when production pile driving occurs. Work during daylight hours on weekdays.	Activity may cause direct mortality or injury, and/or affect survival growth, and fitness, of exposed fish; may cause avoidance of foraging and overwintering areas and increased predation risk. Effects limited by reduced number of impact driven piles. Likelihood of migration disruption minimal as activity is only for one hour per day during daylight hours. In addition, BT migrations are mostly nocturnal.

Preliminary Draft for Agency Review

Action	Exposure					Response to Stressor	Minimization Measures	Resulting Effects of the Action
	Stressor	When	Duration	Frequency	Life History Form			
Impact Pile Driving – Sand Ck Bridge 3.1 Permanent Bridge	Increased SPLs	During construction	Temporary; approx. 1 month	Estimated up to six hours each day that piles are being installed	Sub-adults; Adults	Dependent on noise magnitude and project-specific conditions; may range from: -fatal injury or permanent auditory tissue damage -auditory masking or temporary hearing effects may increase risk of predation and/or decrease foraging efficiency due to decreased ability to sense predators and/or prey -startle and flight/habitat avoidance leading to decreased growth and fitness.	Limit pile driving to winter pool/low-water conditions since sound does not propagate well in shallow water. In-water/below OHWM piles limited to 22 of 64 piles. Work during daylight hours on weekdays. Use initial dispersal strike to minimize potential for fish to be in vicinity when production pile driving occurs. Use bubble curtain to reduce sound pressure, and turbidity curtain to contain sediment, where possible. Assume 2,400 impact strikes per day installing two piles/day one at a time.	Likelihood of exposure limited to areas where sound may propagate into LPO. May cause avoidance of foraging areas in LPO.
Impact Pile Driving – LPO Bridge 3.9 Permanent Bridge	Increased SPLs	During construction	Temporary; approx. 6 months	Estimated up to six hours each day that piles are being installed	Sub-adults; Adults	Dependent on noise magnitude and project-specific conditions; may range from: -fatal injury or permanent auditory tissue damage -auditory masking or temporary hearing effects may increase risk of predation and/or decrease foraging efficiency due to decreased ability to sense predators and/or prey -startle and flight/habitat avoidance leading to decreased growth and fitness.	Use bubble curtains to reduce sound pressure, and turbidity curtains to contain sediment. Use vibratory driver to refusal before using impact hammer. Use initial dispersal strike to minimize potential for fish to be in vicinity when production pile driving occurs. Work during daylight hours on weekdays. Assume 3,200 impact strikes per day installing two piles/day one at a time; assume 6,400 impact strikes per day if piles installed simultaneously at either end of the bridge	Activity may cause direct mortality or injury, and/or affect survival growth, and fitness, of exposed fish; may cause avoidance of foraging and overwintering areas and increased predation risk. Likelihood of migration disruption minimal as work is during daylight hours. In addition, BT migrations are mostly nocturnal.

Preliminary Draft for Agency Review

Action	Exposure					Response to Stressor	Minimization Measures	Resulting Effects of the Action
	Stressor	When	Duration	Frequency	Life History Form			
Pile Removal – Sand Ck Bridge 3.1 Temporary Work Bridge	Increased turbidity; increased suspended solids	During project construction	Temporary; approx. 3months?	eight hours per day	Sub-adults; Adults	Dependent on magnitude. turbidity may cause physical injury and/or physiological effects (e.g., gill trauma, altered osmoregulation, blood chemistry changes). Moderate to high turbidity may cause behavioral alteration (e.g., avoidance responses) leading to increased territoriality, reduced foraging opportunity, increased predation exposure, and altered migration behavior.	Slowly vibrate piles out of creek bed; remove piles during winter pool/low water conditions. Use turbidity curtains where possible. turbidity	Exposure is unlikely (shallow water/little to no flow to LPO)).
Pile Removal – LPO Bridge 3.9 Temporary Work Bridge	Increased turbidity; increased suspended solids; resuspension of potentially contaminated sediments	During project construction	Temporary; approximately 1 year	Approx. eight hours per day	Sub-adults; Adults	Dependent on magnitude. Turbidity may cause physical injury and/or physiological effects (e.g., gill trauma, altered osmoregulation, blood chemistry changes). Moderate to high turbidity may cause behavioral alteration (e.g., avoidance responses) leading to increased territoriality, reduced foraging opportunity, and increased predation exposure. Resuspension of contaminated sediments may cause avoidance, mortality (metals at acute levels), increased stress, reduced growth and fitness, tissue bioaccumulation at sub-acute levels resulting in chronic physiological effects leading to reduced fitness and/or mortality.	Slowly vibrate piles out of lakebed; use turbidity curtain around each pile or bent being removed; anchor curtain to lakebed for total water column seal and tie off to withstand maximum current conditions	Use of turbidity curtain will isolate the work area. Likelihood of exposure is limited. Should exposure occur, may affect sub-adult survival, growth and fitness, and adult fitness that may affect spawning success.

Preliminary Draft for Agency Review

Action	Exposure					Response to Stressor	Minimization Measures	Resulting Effects of the Action
	Stressor	When	Duration	Frequency	Life History Form			
LPO Bridge 3.9 Temporary Work Bridge – Ambient Light Modification	Daytime shading from structures requires visual and behavioral adaptations	Year-round from sunrise to sunset	Temporary	Daily	Sub-adults; Adults	Increased energy expense, reduced foraging success; increased predation exposure for sub-adults.	Bridge designed at sufficient elevation to allow penetration of ambient light during most of the day	Likelihood of effect is minimal; BT generally remain in deeper waters during daytime
LPO Bridge 3.9 Permanent Bridge – Ambient Light Modification	Daytime shading from structures requires visual and behavioral adaptations	Year-round from sunrise to sunset	Permanent	Daily	Sub-adults; Adults	Increased energy expense, reduced foraging success; increased predation exposure for sub-adults.	Bridge designed at sufficient elevation to allow penetration of ambient light during most of the day	Likelihood of effect is minimal; BT generally remain in deeper waters during daytime
LPO Bridge 3.9 Temporary Work Bridge – Underwater Structures	Increased hiding habitat requires visual and behavioral adaptations	Year-round	Temporary; approx. 2.5 to 3 years	Daily	Sub-adults; Adults	Increased energy expense, reduced foraging success; increased predation exposure for sub-adults	None proposed.	Alteration of predator/prey relationships. Likelihood of migration disruption minimal as BT migrations are mostly nocturnal.
LPO Bridge 3.9 Permanent Bridge-Underwater Structures	Increased hiding habitat requires visual and behavioral adaptations	Year-round	Permanent	Daily	Sub-adults; Adults	Increased energy expense, reduced foraging success; increased predation exposure for sub-adults.	Bridge designed to have fewer piers than existing bridge and would align approximately with every other pier of existing bridge, thereby minimizing amount of underwater structures. Piers would be 65 to 93 feet apart.	Alteration of predator/prey relationships. Likelihood of migration disruption minimal as BT migrations are mostly nocturnal.
Construction Vessel Operation	Increased ambient noise	During project construction	Temporary	Daily for installation of turbidity and bubble curtains, construction support; emergency support, etc.	Sub-adults; Adults	Auditory masking or temporary hearing threshold effects may increase risk of predation and/or decrease foraging efficiency due to decreased ability to sense predators and/or prey.	Minimize number of motorized vessels	Limited effect due to use of barges and a limited number of motorized vessels.

Preliminary Draft for Agency Review

Action	Exposure					Response to Stressor	Minimization Measures	Resulting Effects of the Action
	Stressor	When	Duration	Frequency	Life History Form			
Construction Activities								
Nearshore Fills/Riparian Vegetation Removal	Alteration of critical habitat	During project construction	Permanent	Daily	Sub-adults; Adults	Reduced foraging success	Limited to less than 1 acre of alteration, dispersed among four locations at the north and south ends of LPO Bridge 3.9 and the south end of Sand Ck Bridge 3.1. Limit Removal of existing shoreline vegetation to the minimum necessary for project construction.	Insignificant effect due to low quality of nearshore habitat at proposed fill locations and relative to the total amount of shoreline and riparian vegetation and suitable habitat currently remaining in LPO and the project area.

Preliminary Draft for Agency Review

Appendix G

State Historic Preservation Office Concurrence

Preliminary Draft for Agency Review

USCG0015163/27

IDAHO STATE
HISTORICAL SOCIETY

C.L. "Butch" Otter
Governor of Idaho

Janet Gallimore
Executive Director
State Historic
Preservation Officer

Administration:
2205 Old Penitentiary Rd.
Boise, Idaho 83712
208.334.2682
Fax: 208.334.2774

Idaho State Museum:
610 Julia Davis Dr.
Boise, Idaho 83702
208.334.2120

Idaho State Archives and State Records Center:
2205 Old Penitentiary Rd.
Boise, Idaho 83712
208.334.2620

State Historic Preservation Office:
210 Main St.
Boise, Idaho 83702
208.334.3861

Old Idaho Penitentiary and Historic Sites:
2445 Old Penitentiary Rd.
Boise, Idaho 83712
208.334.2844

HISTORY.IDAHO.GOV

8 August 2018

Steven Fischer
US Coast Guard
US Department of Homeland Security
915 Second Ave, Room 3510
Seattle, Washington 98174-1067

Re: BNSF Sandpoint Junction Connector, Bonner County, Idaho
SHPO# 2018-365

Dear Mr. Fischer:

Thank you for continuing consultation with our office on the above referenced project. We are in receipt of the revised cultural resources report dated August 2018 for the BNSF Sandpoint Junction Connector Project, located in Sandpoint, Bonner County, Idaho.

After reviewing the revised report, SHPO concurs with all recommended determinations of eligibility for historic properties within the APE (001, Rock Wall 1, 10BR38 and 10BR1026). Pursuant to 36 CFR 800, we have applied the criteria of effect to the proposed undertaking. Based on the updated information received 6 August 2018, we concur the proposed project actions will have **no adverse effect** to historic properties.

In the event that cultural material is inadvertently encountered during implementation of this project, work shall be halted in the vicinity of the finds until they can be inspected and assessed by the appropriate consulting parties.

If you have any questions or the scope of work changes, please contact me via phone or email at 208.488.7468 or matt.halitsky@ishs.idaho.gov.

Sincerely,

M. Halitsky

Matthew Halitsky, AICP
Historic Preservation Review Officer
Idaho State Historic Preservation Office

Preliminary Draft for Agency Review

Appendix H

Idaho Department of Lands Encroachment Permit

Preliminary Draft for Agency Review

BEFORE THE STATE BOARD OF LAND COMMISSIONERS
STATE OF IDAHO

In the Matter of:	)	Case No. PH-2018-PUB-20-001
	)	
Encroachment Permit Application No. L-96-S-0096E.	)	**FINAL ORDER**
	)	
BNSF Railway Co., Applicant.	)	

I. NATURE OF PROCEEDINGS/ISSUES

Encroachments, including bridges and fills, placed in, on or above the beds of navigable lake require a permit issued by the Idaho Department of Lands ("IDL") pursuant to the requirements of the Lake Protection Act, Title 58, Chapter 13, Idaho Code, and the corresponding administrative rules promulgated by the State Board of Land Commissioners, IDAPA 20.03.04.000 *et seq.*, Rules for the Regulation of Beds, Waters and Airspace over Navigable Lakes in the State of Idaho.

BNSF Railway Co. ("Applicant"), applied for Encroachment Permit No. L-96-S-0096E on February 22, 2018 ("Application"). Applicant seeks an encroachment permit for bridges across Lake Pend Oreille and Sand Creek, with certain associated fill. On March 14, 2018, I issued a Notice of Appointment of Hearing Coordinator and Hearing, in which I appointed Chris Bromley as Hearing Coordinator. The document also provided notice of two public hearings to be held on May 23, 2018: One at 8 a.m. Pacific Time in Ponderay, Idaho, and one at 6 p.m. Pacific Time in Sandpoint, Idaho. In addition, IDL extended the public comment beyond the thirty days required by Idaho Code § 58-1306, and held the record open for written comment until the conclusion of the evening hearing held on May 23, 2018.

Preliminary Draft for Agency Review

The Hearing Coordinator issued his Preliminary Order on June 14, 2018. My responsibility is to render a decision pursuant to Idaho Code § 58-1306(c) and IDAPA 20.03.04.030.07 on the behalf of the State Board of Land Commissioners based on the record and applicable law. In making this determination I have relied on the entire record for this matter. Specifically,

- I have read the transcript of the public hearings conducted in Ponderay and Sandpoint, Idaho, on May 23, 2018.
- I have reviewed the record, including the Application and all documents and exhibits thereto; all written comments received prior to the close of the May 23, 2018 evening hearing; and all documents and exhibits.
- I have examined the Hearing Coordinator's Preliminary Order in light of the entire record and the applicable law.

II. FINDINGS OF FACT

A. I adopt Paragraphs 1 – 31 of the Factual and Procedural Background of the Preliminary Order as my Findings of Fact. Certain pertinent additional facts are set forth in the Conclusions of Law, below.

III. CONCLUSIONS OF LAW

B. I adopt Paragraphs 1-8 of the Conclusions of Law of the Preliminary Order ("Conclusions of Law").

C. I have chosen not to adopt Paragraphs 9 - 18 of the Conclusions of Law as written, and those paragraphs are stricken. I instead conclude as follows:

1. The record in this matter includes a copy of "[a]n Act granting Lands to aid in the Construction of a Railroad and Telegraph Line from Lake Superior to Puget's

Preliminary Draft for Agency Review

Sounds, on the Pacific Coast, by the Northern Route," which was enacted by Congress on July 2, 1864. 13 U.S. Statutes at Large, p. 365. Section 2 of the Act, provides, in pertinent part:

> And be it further enacted, That the right of way through the public lands be, and the same is hereby, granted to said "Northern Pacific Railroad Company," its successors and assigns, for the construction of a railroad and telegraph as proposed; . . . Said way is granted to said railroad to the extent of two hundred feet in width on each side of said railroad where it may pass through the public domain, . . .

2. The Act "gave Northern Pacific title in the form of a 'limited fee, made on an implied condition of reverter in the event that the company ceased to use or retain the land for the purpose for which it was granted.'" *Avista Corp., Inc. v. Wolfe*, 549 F.3d 1239, 1242-43 (9th Cir. 2008) (citing *Northern Pac. R.R. Co. v. Townsend*, 190 U.S. 267, 271, 23 S.Ct. 671 (1903)).

3. In addition:

> A grant of land to a railroad for right of way purposes is substantially different from any like grant for other purposes. The character of the contemplated use makes it different. It is intended that the use by a railroad company will be perpetual and continuous. A railroad company performs a public service and is burdened with a public duty. In the performance of that duty it is held to the exercise of the highest degree of care, and the complete, convenient, and safe use of its right of way requires that its possession be exclusive—a possession not shared with another; that it have complete dominion over its right of way and that it enjoy all those rights which usually attend the fee.

Lake CDA Investments, LLC v. Idaho Dep't. of Lands, 149 Idaho 274, 282, 233 P.3d 721, 279 (2010) (quoting *Coulsen v. Aberdeen-Springfield Canal Co.*, 47 Idaho 619, 626-27, 277 P. 542, 544-45 (1929)).

Preliminary Draft for Agency Review

4. Whether a general grant of land such as that found in the 1864 Act is sufficient to convey ownership of submerged lands is uncertain, as recognized by the United States Supreme Court:

> "[A]s was pointed out in *Shively v. Bowlby*, at pages 49, 57, 58 (14 S. Ct. 548), the United States early adopted and constantly has adhered to the policy of regarding lands under navigable waters in acquired territory, while under its sole dominion, as held for the ultimate benefit of future states, and so has refrained from making any disposal thereof, save in exceptional instances when impelled to particular disposals by some international duty or public exigency. It follows from this that disposals by the United States during the territorial period are not lightly to be inferred, and should not be regarded as intended unless the intention was definitely declared or otherwise made very plain.

United States v. Holt State Bank, 270 U.S. 49, 55 (1926).

5. The record includes a "Rand McNally & Co." map, circa 1890, which shows the route of "the Northern Pacific Railroad Company Land Grant" in and around "Sand Point." The map shows the route as being adjacent to and crossing Lake Pend Oreille. Current aerial images that were included with the Application and are therefore part of the record show that BNSF is utilizing the route, including areas directly adjacent to the Lake at points on its northern and southern shores.

6. The right of way granted by Congress in 1864 extends across Lake Pend Oreille.

7. Idaho became a state in 1890, and "was admitted to the Union . . . on equal footing with its sister states in every respect. Idaho Admission Bill § 1 (1890). The state obtained title to all land below the high water mark of navigable waters within the state at the time of its admission based on this equal footing doctrine." *Idaho Forest Indus., Inc. v. Hayden Lake Watershed Imp. Dist.*, 112 Idaho 512, 516, 733 P.2d 733, 737 (1987).

Preliminary Draft for Agency Review

8. In light of those principles, the grant of right-of-way did not necessarily alienate the submerged lands to BNSF.

9. For purposes of this Final Order, it is not necessary to decide whether BNSF or the State of Idaho owns the bed and banks of Lake Pend Oreille. All that is necessary is to recognize BNSF's right to utilize the right-of-way for construction of a railroad bridge and associated fill.

D. I hereby adopt Paragraphs 19 - 22 (including the footnote therein) of the Conclusions of Law, and conclude that the Application was timely published, comments were taken, and hearings were held.

E. I hereby adopt Paragraphs 23 – 25 of the Conclusions of Law, and conclude that the Idaho Department of Lands ("IDL") has jurisdiction over Lake Pend Oreille and Sand Creek.

F. I hereby adopt Paragraphs 26 – 29 of the Conclusions of Law.

G. I decline to adopt Paragraph 30 – 32 of the Conclusions of Law, and instead conclude as follows:

> The Application may only be approved if it can be "regulated in order that the protection of property, navigation, fish and wildlife habitat, aquatic life, recreation, aesthetic beauty and water quality be given due consideration and weighed against the navigational or economic necessity or justification for, or benefit to be derived from the proposed encroachment." I.C. § 58-1301. As will be explained below, weighing those "lake values" against the benefit of the project, the preponderance of the evidence leads in favor of approving the Application.

Preliminary Draft for Agency Review

H. I hereby adopt Paragraphs 33 – 45 of the Conclusions of Law, with the exception that the word "trans" in Paragraph 38, p. 27, line 11 is corrected to "trains."

IV. FINAL ORDER

Based upon the entire record; the Lake Protection Act (Title 58, Chapter 13, Idaho Code); and the Rules for the Regulation of Beds, Waters and Airspace over Navigable Lakes in the State of Idaho, IDAPA 20.03.04.000 *et seq.*, and as reflected in the Findings of Fact and Conclusions of Law set forth above,

It is hereby ORDERED that the Application for Encroachment Permit No. L-96-S-0096E is APPROVED with a five year sunset period for construction.

This is a final order of the agency. Pursuant to Idaho Code § 58-1306(c) and IDAPA 20.30.04.030.09, the Applicant or any aggrieved party who appeared at the hearing shall have the right to have the proceedings and Final Order reviewed by the district court in the county in which the encroachment is proposed by filing a notice of appeal within thirty (30) days from the date of this Final Order. Because this Order is for approval of a permit, any party appealing this Final Order must file a bond with the district court in accordance with Idaho Code § 58-1306(c). The amount of the bond will be set by the district court, in an amount not less than $500.

DATED this 21st day of June, 2018.

DAVID GROESCHL
Director, Department of Lands

Preliminary Draft for Agency Review

CERTIFICATE OF MAILING

I hereby certify that on this 22nd day of June, 2018. I caused to be served a true and correct copy of the foregoing by the method indicated below, and addressed to the following:

Matthew Keim BNSF Railway Co. Northtown GOB 80 44th Avenue NE Minneapolis, MN 55421	☒ U.S. Mail, postage prepaid ☐ Hand Delivery ☐ Federal Express ☒ Email: Matthew.Keim@BNSF.com
Shane Slate United States Army Corps of Engineers	☐ U.S. Mail, postage prepaid ☐ Hand Delivery ☐ Federal Express ☒ Email: shane.p.slate@usace.army.mil
Jim Lewis	☐ U.S. Mail, postage prepaid ☐ Hand Delivery ☐ Federal Express ☒ Email: jlewis@mtrail.com
Glen Bailey	☐ U.S. Mail, postage prepaid ☐ Hand Delivery ☐ Federal Express ☒ Email: ltcbailey@gmail.com
Monika Wachowiak	☐ U.S. Mail, postage prepaid ☐ Hand Delivery ☐ Federal Express ☒ Email: monawasser@gmail.com
Helen Newton	☐ U.S. Mail, postage prepaid ☐ Hand Delivery ☐ Federal Express ☒ Email: snhnewton@frontier.com
Matt Nykiel	☐ U.S. Mail, postage prepaid ☐ Hand Delivery ☐ Federal Express ☒ Email: mnykiel@idahoconservation.org
Helen Yost Wild Idaho Rising Tide	☐ U.S. Mail, postage prepaid ☐ Hand Delivery ☐ Federal Express ☒ Email: wild.idaho.rising.tide@gmail.com

Preliminary Draft for Agency Review

Bill Cronenberg	☐ U.S. Mail, postage prepaid ☐ Hand Delivery ☐ Federal Express ☒ Email: bcronenberg@msn.com
Laura Ackerman	☐ U.S. Mail, postage prepaid ☐ Hand Delivery ☐ Federal Express ☒ Email: lackerman@landscouncil.org
Gabe Hinkle	☐ U.S. Mail, postage prepaid ☐ Hand Delivery ☐ Federal Express ☒ Email: gabehinkle@hotmail.com
Tim Spangler 1135 Mullan Rd W. Superior, MT 59872	☒ U.S. Mail, postage prepaid ☐ Hand Delivery ☐ Federal Express ☐ Email:
Rebecca Holland 300 Amber Dr. Sandpoint, ID 83864	☒ U.S. Mail, postage prepaid ☐ Hand Delivery ☐ Federal Express ☐ Email:
David E. Hall	☐ U.S. Mail, postage prepaid ☐ Hand Delivery ☐ Federal Express ☒ Email: david_hall@hotmail.com
Dan McDonald	☐ U.S. Mail, postage prepaid ☐ Hand Delivery ☐ Federal Express ☒ Email: dan.mcdonald@bonnercountyid.gov
Douglas Jones Idaho Department of Water Resources	☐ U.S. Mail, postage prepaid ☐ Hand Delivery ☐ Federal Express ☒ Email: doug.jones@idwr.idaho.gov
Pat Keim 1350 Deer Meadow Dr. Helena, MT 59601	☒ U.S. Mail, postage prepaid ☐ Hand Delivery ☐ Federal Express ☐ Email:

Preliminary Draft for Agency Review

Jane Fritz	☐ U.S. Mail, postage prepaid ☐ Hand Delivery ☐ Federal Express ☒ Email: janefritz@frontier.com
Ann Giantvalley	☐ U.S. Mail, postage prepaid ☐ Hand Delivery ☐ Federal Express ☒ Email: dgiantvalley@gmail.com
Timothy Krech	☐ U.S. Mail, postage prepaid ☐ Hand Delivery ☐ Federal Express ☒ Email: timothykrech@gmail.com
Andrea Marcoccio	☐ U.S. Mail, postage prepaid ☐ Hand Delivery ☐ Federal Express ☒ Email: marcoccio.andrea@gmail.com
Shelly Sugarman	☐ U.S. Mail, postage prepaid ☐ Hand Delivery ☐ Federal Express ☒ Email: shelly.h.sugarman@uscg.mil
Shelby Rognstad	☐ U.S. Mail, postage prepaid ☐ Hand Delivery ☐ Federal Express ☒ Email: mayor@sandpointidaho.gov
Dave Pietz	☐ U.S. Mail, postage prepaid ☐ Hand Delivery ☐ Federal Express ☒ Email: davepietz67@gmail.com
Steve Lockwood	☐ U.S. Mail, postage prepaid ☐ Hand Delivery ☐ Federal Express ☒ Email: yachthalo@yahoo.com
Judy Butler	☐ U.S. Mail, postage prepaid ☐ Hand Delivery ☐ Federal Express ☒ Email: bjudy90@yahoo.com

Preliminary Draft for Agency Review

Kathleen Huntley	☐ U.S. Mail, postage prepaid ☐ Hand Delivery ☐ Federal Express ☒ Email: kathofhope@gmail.com
Emily Neff	☐ U.S. Mail, postage prepaid ☐ Hand Delivery ☐ Federal Express ☒ Email: anomaly412@yahoo.com
John Garton	☐ U.S. Mail, postage prepaid ☐ Hand Delivery ☐ Federal Express ☒ Email: johngarton@bellsouth.net
Rick Cramer	☐ U.S. Mail, postage prepaid ☐ Hand Delivery ☐ Federal Express ☒ Email: rjcramer7@gmail.com
Andrew Kennaly	☐ U.S. Mail, postage prepaid ☐ Hand Delivery ☐ Federal Express ☒ Email: akennaly@gmail.com
Steven Morgan	☐ U.S. Mail, postage prepaid ☐ Hand Delivery ☐ Federal Express ☒ Email: morgan@asglaw.com
Jim Lewis	☐ U.S. Mail, postage prepaid ☐ Hand Delivery ☐ Federal Express ☒ Email: jlewis@mtsoil.com
Courtney Wallace	☐ U.S. Mail, postage prepaid ☐ Hand Delivery ☐ Federal Express ☒ Email: Courtney.wallace@bnsf.com
Anne James PO Box 347 Newport, WA 99156	☒ U.S. Mail, postage prepaid ☐ Hand Delivery ☐ Federal Express ☐ Email:

Preliminary Draft for Agency Review

Steve Geiger	☐ U.S. Mail, postage prepaid ☐ Hand Delivery ☐ Federal Express ☒ Email: mayor@ponderay.org
Kiira Siitari Idaho Department of Fish and Game 2885 West Kathleen Avenue Coeur d'Alene, ID 83815	☒ U.S. Mail, postage prepaid ☐ Hand Delivery ☐ Federal Express ☒ Email: kiira.siitari@idfg.idaho.gov
Pierre Bordenave Jacobs Engineering 101 North Fourth Avenue, Suite 203 Sandpoint, ID 83864	☒ U.S. Mail, postage prepaid ☐ Hand Delivery ☐ Federal Express ☒ Email: pierre.bordenave@jacobs.com
Don Hagen 169 Lakeshore Dr. Sagle, ID 83860	☒ U.S. Mail, postage prepaid ☐ Hand Delivery ☐ Federal Express ☐ Email:
Diane French Idaho Department of Lands	☐ U.S. Mail, postage prepaid ☐ Hand Delivery ☐ Federal Express ☒ Email: dfrench@idl.idaho.gov

Renée Miller, Management Assistant

Preliminary Draft for Agency Review

Preliminary Draft for Agency Review

BEFORE THE DEPARTMENT OF LANDS

OF THE STATE OF IDAHO

In the Matter of: Encroachment Permit Application No. L-96-S-0096E BNSF Railway Co., Applicant.	Case No. PH-2018-PUB-20-001 **PRELIMINARY ORDER**

FACTUAL AND PROCEDURAL BACKGROUND

1. On February 22, 2018, the BNSF Railway Company ("BNSF") filed a *Joint Application for Permits* ("Application" or "App.") with the Idaho Department of Lands ("Department" or "IDL"), the Idaho Department of Water Resources, and the U.S. Army Corps of Engineers ("USACE") for bridges across Bridge Street, Lake Pend Oreille ("Lake"), and Sand Creek. *App.* at 1. "The project purpose is to provide improvements for freight and passenger rail traffic to meet existing and ongoing capacity needs. Rail traffic volumes have significantly increased for the past 30-years to the point that section of the BNSF rail system has become a constraint for interstate commerce." *App.* at 5. The "preferred" alternative is construction of "New Track and Bridges over Sand Creek and Lake Pend Oreille west of the existing track/bridges . . . ." *Id.* "The existing single mainline and portions of the over-water rail bridges date from the early 1900s. . . . . The proposed project will relieve system congestion, back-up of rail traffic, and reduce hold times on sidings and wait times at grade crossings both locally and regionally." *Attachment to App.*, *Alternative Analyses: Sandpoint Junction Connector Project* at 4.

Preliminary Draft for Agency Review

A. The Bridges

2. The bridge over Sand Creek is referred to by BNSF as "Bridge 3.1." *App.* at 2. The bridge over Lake Pend Oreille is referred to by BNSF as "Bridge 3.9." *Id.* "The new bridges will be constructed from the temporary construction bridges." *Id.* at 4. "Temporary, timber deck work bridges will be constructed immediately adjacent to (west side) of the proposed new bridges to support large cranes . . . ." *Id.* at 4. "All bridge pile driving, both temporary and permanent, will be initially vibratory, and then impact driven. The temporary construction bridges (24-inch-diameter steel piles) will be primarily vibrated, with typically one pile per bent impact proofed, to provide appropriate support for equipment. The permanent bridges will be mostly vibrated to resistance, and then impact driven to meet railroad loading requirements." *Id.*

3. "Prior to construction, a navigational plan for both the Br. 3.1 and Br. 3.9 temporary and new bridges will be developed and approved by IDL in accordance with Rule 015.13.g of IDAPA 20.03.04 . . . . This plan will address bridge(s) lighting and other navigational markings or aids for the project." *Id.* at 5. An *Addendum – 1* ("Addendum") dated January 31, 2018, but updated on February 14, 2018, was submitted by BNSF to IDL regarding compliance with IDAPA 20.03.04.015.13.g. The Addendum addresses markings and lighting on the temporary and permanent bridge piers.

4. "The project design and proposal will not result in permanent changes to the hydrology of either Lake Pend Oreille or Sand Creek." *App.* at 5.

Preliminary Draft for Agency Review

i. Bridge 3.9 over Lake Pend Oreille

5. Regarding Bridge 3.9, "There is an existing interstate, mainline railroad bridge at the project site. The existing fixed bridge has both open-deck and ballast-deck spans, and is 4,769 feet long with 88 piers. Thirty-two of the original 100+ year-old single column concrete piers on wood pilings (16 on the north end and 16 on the south end of the bridge) were replaced in 2006-2009 with steel bents, each comprised of six closed-end steel pipe piles. The existing bridge also has a non-operable swing span over the two existing, published 76.6 foot-wide navigational channels." *Attachment to App., Coast Guard Bridge Permit Application, Proposed BNSF Railway Company Lake Pend Oreille Bridge 3.9* at 2 (December 21, 2017) ("USCG 3.9 App.").

6. The new, permanent bridge across the Lake "will be approximately 50 feet to the west of the existing bridge" consisting of "49 total spans," "48 in-water pier bents (piers), each consisting of six, open-ended 36-inch diameter steel pipe pilings, for a total of 288 pilings below the jurisdictional OHWM (2062.5') elevation of the lake. The new bridge piers will match the approximate alignment of every other pier for the majority of the existing Bridge 3.9." *App.* at 2. There will be "10 spans at, and adjacent to the designated navigational spans on the existing bridge [which] will closely match those longer span horizontal clearances. The maximum vertical clearance (low chord) of the new bridge will be 15 feet above the regulated summer pool elevation of 2062.5 feet. These 15-foot clearances will consist of six 75' 11" spans, four of which will align with the existing rail bridge's 77-foot spans that are equal to or greater than 15-foot vertical clearance." *Id.* The new bridge will be 4,874 feet long, "made of precast, pre-stressed concrete I-girders, a cast-in-place concrete deck, and pre-cast concrete caps . . . ." *USCG 3.9 App.* at 2.

Preliminary Draft for Agency Review

7. The temporary, construction bridge across the Lake "will be constructed west of the new bridge location consisting of approximately 100, 48-foot long spans and one 24-foot long span at the north end. The construction bridge will have a total of 137 piers consisting of: 76 piers will four, 24-inch-diameter steel piles; 25 piers with eight, 24-inch-diameter steel piles; 32 piers with four, 24-inch-diameter steel piles to construct eight bridge staging setouts at approximately 500-foot intervals along the construction bridge." *Id.* "In total there may be up to 700, 24-inch steel piles to accommodate minor adjustments in span support needs and site conditions. The construction bridge low chord elevation will gradually rise from the abutments at each end to a four-span section, corresponding to two spans on the existing bridge (Spans 64 and 65) with 15 feet of vertical clearance above the regulated summer pool elevation of 2062.5 feet. The construction bridge will grade at a 0.5% or less slope from the abutments to these 15-foot elevations. This will result in Spans 1 through 16 at the north end of the bridge having less than 10 feet of vertical clearance and the remaining 72 spans having 10 feet or greater vertical clearance." *Id.* at 3.

8. "For Br. 3.9, some of the permanent bridge work will begin as the work bridge is under construction." *Id.* at 4.

9. "Br. 3.9 will have 36-inch diameter steel pipes requiring an average of 1600 strikes each. The pilings driven for Br. 3.9 will have a bubble curtain from the pile driving for those locations that are at least 8-feet deep at the time of the pile driving. If less than 8-feet deep, just turbidity curtains will be used." *Id.* at 4.

10. "The proposed project will take approximately 3-3.5 years (2018-2021). Proposed work is year-round." *Id.* at 3.

Preliminary Draft for Agency Review

11. The estimated cost of Bridge 3.9 is over $100 million, and will be privately funded. *Id.*

ii. Bridge 3.1 over Sand Creek

12. Regarding Bridge 3.1, "There is an existing interstate, mainline railroad bridge at the project site. The existing fixed bridge is 155 feet long and 14 feet wide with four concrete piers, two of which are abutments. It was originally constructed in 1902, but was modified in 1990 with replacement of the superstructure, concrete pier caps, deck and walk. The existing bridge will remain unchanged." *Attachment to App.*, *Coast Guard Bridge Permit Application, Proposed BNSF Railway Company Sand Creek Bridge 3.1* at 2 (December 21, 2017) ("USCG 3.1 App.").

13. The new, permanent bridge across Sand Creek "will be approximately 35 feet to the west of the existing Bridge 3.1 and consist of 12 total spans [consisting of] [o]ne approximate 80-foot span over the creek channel; [s]even approximate 45-foot spans, one of which will be over a portion of the creek during high water and the rest being fully upland of the OHWM (2062.5'); [t]hree approximate 25-foot spans, one of which will be over a portion of the creek during high water and the other two being fully upland of the OHWM (2062.5'); [a]nd one approximate 31-foot transition span, which will not be over water." *App.* at 3. "There will be a total of 11 piers associated with the new bridge: [t]wo piers consisting of eight 24-inch diameter steel pilings, all of which will be within the navigational channel. Seven piers consisting of six 24-inch-diameter steel pilings, both which will be upland of the regulated OHWM (2062.5'). Two piers consisting of three 24-inch-diameter steel pilings, both of which will be upland of the regulated OHWM (2062.5'). The total number of pilings is projected to be 64, 22 of which will be below the regulated OHWM (2062.5')." *Id.* "Only two of the piers will be fully within the

Preliminary Draft for Agency Review

creek's navigational channel. The new bridge navigational horizontal clearance is 74 feet; the existing bridge has an approximate 45-foot horizontal clearance. Vertical clearance of the new bridge will match the vertical clearance of the existing bridge, which is 17 feet above the 2062.5-foot OHWM." *Id.*

14. The temporary, construction bridge over Sand Creek will "consist[] of 11 spans. There will be 10 piers fully or partially within the jurisdictional area below the OHWM (2062.5'). These will consist of: [t]wo piers with eight 24-inch-diameter steel pilings[;] [e]ight piers with four 24-inch-diameter steel pilings[.]" *Id.* "The total number of pilings below the OHWM (2062.5') may be up to 40 to accommodate minor adjustments in variable span support needs and site conditions. The temporary construction bridge span over Sand Creek marked and lighted navigational channel will be limited to the period when no navigational access up Sand Creek is available, from approximately October 15 to April 15, depending on Albeni Falls Dam fall drawdown and spring fill." *Id.*

15. "Br. 3.1 will have 24-inch diameter steel pipe piles requiring an average of 1200 strikes each." *Id.* at 4. "The pilings driven for Br. 3.1 will not be either bubble curtains or turbidity curtains due to the shallow nature of Sand Creek, and the current flow of the creek renders them both ineffective. The primary use of the turbidity curtain is to contain and settle the sediments that typically result from the use of bubble curtains. They also provide a small amount of sound attenuation during the pile driving activity." *Id.*

16. "The Bridge 3.1 project will take approximately one year and will occur during the 2018-2021 construction timeframe for the entire BNSF Sandpoint Junction Connector project. However, construction of the spans within the navigational area of Sand Creek will be limited to the period when navigational access is highly restricted upstream on Sand Creek, from

Preliminary Draft for Agency Review

approximately mid-October to mid-April during the regulated low water or winter pool period." *USCG 3.1 App.* at 4.

17. The estimated cost of Bridge 3.1 is over $8 million, and will be privately funded. *Id.* at 3.

B. Nearshore Edge Fill Below The Ordinary High Water Mark

18. There will be a "[t]otal of 0.88-acre of permanent fill and 0.38 acres of temporary fill: 0.29-acre permanent fill along the lakeshore edge at the south end of the project where the new track will connect to the existing BNSF Algoma Siding north switch[;] 0.01-acre permanent fill and 0.03-acre temporary fill at the south end of Bridge 3.9 to accommodate the transition from the bridges to the existing upland grade[;] 0.57-acre of permanent fill and 0.3-acre temporary fill at the north end of the Bridge 3.9 to accommodate the transition from bridges to the existing upland grade . . . [;] 0.01-acre at the south end of Bridge 3.1 to accommodate the transition from bridge to new rail grade[;] 0.05-acre temporary/incidental fill assumed from construction activities to install Bridge 3.1 upland pilings along the water line north of the navigational channel." *App.* at 3.

19. "Fills in nearshore locations and wetlands will occur at the earliest stages of the project to take advantage of performing that work while lake levels are lower and wetland areas are relatively dry." *Id.* at 4.

C. Notice Of The Application And Hearings

20. On February 26, 2018, the Department mailed a notice of the Application to the US Army Corps of Engineers-CDA, Idaho Department of Fish and Game, Idaho Department of Environmental Quality, Idaho Department of Water Resources, Idaho Department of Transportation, Bonner County Marine Division, Bonner County Public Works, Lakes

Preliminary Draft for Agency Review

Commission, Idaho Conservation League, Lake Pend Oreille, Pend Oreille Lake*A*Syst Coordinator, and adjacent neighbors.

21. On February 26, 2018, IDL mailed courtesy notifications of the Application to the City of Sandpoint, Allen G. Family, LLC, Waterfront Property Management, LLC, Alan A. Berryman, DJ Land Corporation, and Condo Del Sol Association, Inc.

22. According to a March 7, 2018 *Affidavit of Publication*, signed by the legal clerk of the *Bonner County Daily Bee*, notice of the Application ran for a period of two consecutive weeks, commencing on February 28, 2018 and ending March 7, 2018. The *Notice of Application* published in the *Bonner County Daily Bee* stated, in pertinent part: "BNSF Railway Co. has made application to add a second train bridge adjacent to and west of the existing train bridge across Lake Pend Oreille." The *Notice of Application* stated, "Written comments on this matter must be on file with the Idaho Department of Lands . . . within thirty (30) days after the first appearance of this notice."[1]

23. On March 14, 2018, David Groeschl, Deputy Director ("Director"), appointed Chris M. Bromley as "'Hearing Coordinator' to conduct a hearing in the above-captioned matter. The hearing will be conducted pursuant to Idaho Code § 58-1306(c). The Hearing Coordinator has the scope of authority delineated by IDAPA 20.01.01.413.01 and by IDAPA 20.03.04.05." *Notice of Appointment of Hearing Coordinator and Hearing* at 1. The Deputy Director "delegate[d] initial decision-making authority to the Hearing Coordinator pursuant to Idaho Code § 67-5245." *Id.* "Notice is hereby given that a public hearing in the above-captioned matter will be conducted in accordance with IDAPA 20.01.01.000 *et seq.* on Wednesday, May 23, 2018. The first session of the hearing will start at 8:00 a.m. Pacific Time at the Ponderay Events Center

[1] As will be stated later, all comments received prior to the close of the public hearing on the evening of May 23, 2018 are timely and were considered by the hearing coordinator.

Preliminary Draft for Agency Review

located at 401 Bonner Mall Way, Suite E, Ponderay, Idaho. The second session of the hearing will start at 6:00 p.m. Pacific Time at the Sandpoint Middle School Gymnasium located at 301 South Division, Sandpoint, Idaho." *Id.* at 2. "The Hearing Coordinator shall submit a preliminary order to the Director of the Idaho Department of Lands, who shall issue a Final Order no more than thirty days after the conclusion of the hearing." *Id.* at 1. Thirty days after conclusion of the May 23, 2018 hearings is June 22, 2018.

D. Written Comments

24. Prior to the hearings, approximately 1,100 written comments were received by the Department in response to the Application. The overwhelming majority of written comments were in favor of the Application. Of the written comments in favor of the Application, nearly all were identical in their form and substance, stating the Application should be approved because the project will promote the economy, reduce waiting times at crossings, and increase safety. Comments in favor of the Application that were uniquely written made similar statements. Comments opposed to the Application were concerned with harm to the environment due to pollution (noise, water, air), and wanting to see completion of a full "Environmental Impact Statement" ("EIS") as opposed to simply an "Environmental Assessment" ("EA"). Written comments came from all areas of the country, including Idaho.

E. The Public Hearings

25. The public hearings took place on May 23, 2018, at the times and locations described in the *Notice of Appointment of Hearing Coordinator and Hearing*.

26. At the morning hearing, verbal comments were given by the United States Coast Guard ("USCG"), USACE, BNSF, the Idaho Department of Fish & Game ("F&G"), IDL, and members of the public. With one exception, members of the public who provided verbal

Preliminary Draft for Agency Review

comment at the morning hearing were opposed to the Application for reasons consistent with the written comments. The morning hearing concluded at approximately 9:30 a.m.

27. At the evening hearing, verbal comments were given by USCG, USACE, BNSF, IDL, the Mayor of the City of Sandpoint, two Bonner County Commissioners, the Idaho Conservation League, and members of the public. Most of the verbal comments taken during the evening hearing were opposed to the Application for reasons consistent with the written comments. The evening hearing concluded at approximately 8:15 p.m., at which point the record was closed.

28. All written comments received by the close of the evening hearing are timely and were considered by the hearing coordinator.

29. Of the verbal comments made in opposition to the Application at both the morning and evening hearings, a commonality was the request that a federal EIS be performed, as opposed to simply a federal EA. As previously stated, a similar theme of wanting to see an EIS over an EA is found in the written comments submitted in opposition to the Application.

30. At both the morning and evening hearings, Shelly Sugarman, chief of bridge permitting and policy for the USCG, addressed the issue of a federal EA or EIS. According to Ms. Sugarman, the USCG is the lead federal permitting agency for the BNSF project, and is in the process of reviewing the need for an EA or EIS:

> As part of our permit process we evaluate the navigational and environmental impacts of each proposed project. The Coast Guard has jurisdiction over Lake Pend Oreille because it is a navigable waterway of the United States. We are presently reviewing the application from BNSF to add a second railroad bridge across Lake Pend Oreille and Sand Creek. In April we received a preliminary draft environmental assessment for review as part of BNSF's bridge permit application. The Coast Guard is the lead federal agency under the national environmental policy act and all other federal environmental control laws for this project.

Preliminary Draft for Agency Review

> The Corps of Engineers will be a cooperating agency for us. To better inform our decision as to whether the environmental document should be an environmental assessment or an environmental impact statement we have been reviewing the draft environmental assessment and all public comments submitted to the Corps of Engineers and the Idaho Department of Lands in response to their recent public notices. By early June we expect to decide whether the environmental document will be an environmental assessment or an environmental impact statement. Once drafted, the environmental document will be made available for public review and comment through the federal register at www.regulations.gov. Comments submitted through that website will be available for everyone to view.
>
> The Coast Guard will also hold one or more public meetings here in Idaho during the comment period. We will also provide public notices via US mail to announce that environmental documents are available for review and to provide public meeting details. If you have any questions I will be available throughout the hearing.

Evening Transcript at 9-10 (emphasis added).

31. A number of written comments were received by the Department after the close of the evening hearing. Comments received after the close of the evening hearing were untimely and were not considered.

CONCLUSIONS OF LAW

1. The Hearing Coordinator was tasked by the Department to issue a preliminary order. Idaho Code § 67-5245 governs preliminary orders and states as follows:

> (1) A preliminary order shall include:
> (a) A statement that the order will become a final order without further notice; and
> (b) The actions necessary to obtain administrative review of the preliminary order.
> (2) The agency head, upon his own motion may, or, upon motion by any party shall, review a preliminary order, except to the extent that:
> (a) Another statute precludes or limits agency review of the preliminary order; or
> (b) The agency head has delegated his authority to review preliminary orders to one (1) or more persons.
> (3) A petition for review of a preliminary order must be filed with the agency head, or with any person designated for this purpose by rule of the agency, within fourteen (14) days after the service date of the preliminary order unless a different time is required by other provision of law. If the agency head on his own motion decides

Preliminary Draft for Agency Review

to review a preliminary order, the agency head shall give written notice within fourteen (14) days after the issuance of the preliminary order unless a different time is required by other provisions of law. The fourteen (14) day period for filing of notice is tolled by the filing of a petition for reconsideration under section 67-5243(3), Idaho Code.

(4) The basis for review must be stated on the petition. If the agency head on his own motion gives notice of his intent to review a preliminary order, the agency head shall identify the issues he intends to review.

(5) The agency head shall allow all parties to file exceptions to the preliminary order, to present briefs on the issues, and may allow all parties to participate in oral argument.

(6) The agency head shall:

(a) Issue a final order in writing, within fifty-six (56) days of the receipt of the final briefs or oral argument, whichever is later, unless the period is waived or extended with the written consent of all parties, or for good cause shown;

(b) Remand the matter for additional hearings; or

(c) Hold additional hearings.

(7) The head of the agency or his designee for the review of preliminary orders shall exercise all of the decision-making power that he would have had if the agency head had presided over the hearing.

Idaho Code § 67-5245.

2. According to the *Notice of Appointment of Hearing Coordinator and Hearing*:

The Hearing Coordinator shall submit a preliminary order to the Director of the Idaho Department of Lands, who shall issue a Final Order no more than thirty (30) days after the conclusion of the hearing. As provided in Idaho Code § 67-5240, the contested case provisions of the Administrative Procedures Act do not apply where the legislature has directed the use of alternative procedures. Because the legislature has enacted specific alternative procedures in Idaho Code § 58-1306 that require a final order to be issued within 30 days of the hearing, and leave insufficient time to consider petitions for review of the preliminary order, the procedures of Idaho Code § 67-5245 addressing petitions for review of preliminary orders are not applicable.

Notice of Appointment of Hearing Coordinator and Hearing at 1-2 (emphasis added).

All such hearings shall be public and held under rules promulgated by the board under the provisions of chapter 52, title 67 of the Idaho Code. The board shall render a decision within thirty (30) days following conclusion of the hearing and a copy of the board's decision shall be mailed to the applicant and to each person or agency appearing at the hearing and giving testimony in support of or in opposition to the proposed encroachment. Any applicant or other aggrieved party so appearing at a hearing shall have the right to have the proceedings and

Preliminary Draft for Agency Review

> decision of the board reviewed by the district court in the county where the encroachment is proposed by filing notice of appeal within thirty (30) days from the date of the board's decision.

Idaho Code § 58-1306(c).

3. All hearings in this matter concluded at approximately 8:15 p.m. on May 23, 2018, with the matter now before the hearing coordinator to issue a preliminary order.

4. The proposed activity over Bridge Street does not impact lands within the jurisdiction of the Department. The proposed activity over Lake Pend Oreille and Sand Creek involves temporary and permanent bridges, along with temporary and permanent fill, with areas coming within the Department's jurisdiction pursuant to Idaho's Lake Protection Act, Idaho Code § 58-1301 *et seq.*

A. Burden Of Proof

5. As the applicant, BNSF bears the burden of persuasion. "The customary common law rule that the moving party has the burden of proof—including not only the burden of going forward but also the burden of persuasion—is generally observed in administrative hearings." *Intermountain Health Care, Inc. v. Bd. of County Comm'rs of Blaine County*, 107 Idaho 248, 251, 688 P.2d 260, 263 (Ct. App. 1984) *rev'd on other grounds* 109 Idaho 299, 707 P.2d 410 (1985).

6. Under Idaho law, "preponderance of the evidence" is generally the applicable standard for administrative proceedings, unless the Idaho Supreme Court or legislature has said otherwise. *N. Frontiers, Inc. v. State ex rel. Cade*, 129 Idaho 437, 439, 926 P.2d 213, 215 (Ct. App. 1996). "Absent an allegation of fraud or a statute or court rule requiring a higher standard, administrative hearings are governed by a preponderance of the evidence standard." *Id. citing* 2 Am. Jur. 2d *Administrative Law* § 363 (1994). In civil cases, the well-settled principle is that the

Preliminary Draft for Agency Review

burden of proof is preponderance of the evidence. *Nield v. Pocatello Health Services, Inc.*, 156 Idaho 802, 848, 332 P.3d 714, 760 (2014). "In most hearings the burden of persuasion is met by the usual civil case standard or preponderance of evidence." *Intermountain* at 251, 688 P.2d at 263 "A preponderance of the evidence means that when weighing all of the evidence in the record, the evidence on which the finder of fact relies is more probably true than not." *Oxley v. Medicine Rock Specialties, Inc.*, 139 Idaho 476, 481, 80 P.3d 1077, 1082 (2003).

B. The Application Meets The Procedural Requirements Of Idaho Code § 58-1306

7. Certain requirements, contained in Idaho Code § 58-1306, must be met for an application to be considered by the Department.

i. The Plans are Sufficient

8. First, "Applications . . . shall be submitted upon forms to be furnished by the board and accompanied by plans of the proposed encroachment containing information required by section 58-1302(k)." Idaho Code § 58-1306(a). Plans are defined as meaning, "maps, sketches, engineering drawings, aerial and other photographs, word descriptions, and specifications sufficient to describe the extent, nature and approximate location of the proposed encroachment and the proposed method of accomplishing the same." Idaho Code § 58-1302(k). Here, the Application was submitted on the *Joint Application for Permits* form, approved for use by the Department. Through narrative, photographs, aerial images, engineering drawings, and schematics, BNSF describes the work that will occur. Therefore, the Application meets the requirements of Idaho Code § 58-1306(a) and Idaho Code § 58-1302(k).

ii. BNSF was Granted Title to the Right of Way in the Form of a Limited Fee with an Implied Condition of Reverter

9. Second, "Applications . . . must be submitted or approved by the riparian or littoral owner." Idaho Code § 58-1306(a). A riparian or littoral owner is defined as, "The fee

Preliminary Draft for Agency Review

owner of land immediately adjacent to a navigable lake, or his lessee, or the owner of riparian or littoral rights that have been segregated from the fee specifically by deed, lease, or other grant." IDAPA 20.03.04.010.33 (emphasis added). As will be explained, below, BNSF was granted title to the right of way by the federal government in the form of a limited fee with an implied condition of reverter.

10. Here, BNSF states, "In 1864, the US Congress granted Northern Pacific Railway (now BNSF) the land upon which the current BNSF tracks exist, including where Br. 3.9 crosses Lake Pend Oreille. Subsequently, this property precedes Idaho statehood (1890) and is not formally considered a part of the IDL managed Public Trust Lands." *Application* at 6.

11. In a comment submitted by ICL, it is requested: "IDL analyze and evaluate the ownership of the beds and banks of Lake Pend Oreille and Sand Creek in which BNSF intends to construct new rail infrastructure for the SJC proposal. BNSF has claimed that the bed and land on which it intends to install pilings and other rail infrastructure is not state trust land owned by the people of Idaho because this land was granted to BNSF before statehood." *Comment of ICL* at 3 (May 23, 2018).

12. According to the Department: "During the initial review of the Joint Application, IDL requested from BNSF a copy of the BNSF right of way referenced in Block 23 of the Joint Application. A copy of the right of way document is attached to this testimony. This document states that in 1864, the United States granted a right of way to Northern Pacific Railroad Company, predecessors in interest to BNSF. The right of way was therefore granted prior to statehood in 1890 when the State of Idaho obtained title to the beds and banks of navigable lakes and rivers within Idaho. . . . . The State of Idaho does not claim ownership of the lakebed within

Preliminary Draft for Agency Review

the BNSF railroad right of way, as this is privately submerged lands." *IDL Comment* at 2 (May 23, 2018).

13. The "grant" referenced by BNSF, ICL, and the Department derives from an 1864 Act of Congress, "grant[ing] to the Northern Pacific Railroad Company a right of way for a railroad, and lands in aid of the construction thereof, from Lake Superior to Puget Sound. . . . . 'Said way is granted to said railroad to the extent of two hundred feet in width on each side of said railroad where it may pass through public domain. " *Crandall v. Goss*, 30 Idaho 661, 664, 167 P. 1025, 1025 (1917) citing Act of Congress, approved July 2, 1864 (13 Stats. At L. 365) (emphasis added). "Known as a land grant railroad statute, the 1864 Act gave Northern Pacific title in the form of a 'limited fee, made on an implied condition of reverter in the event that the company ceased to use or retain the land for the purpose for which it was granted.'" *Avista Corp. Inc. v. Sanders County*, 485 F. Supp. 2d 1176, 1181 (D. Mont. 2007) citing *Northern Pacific Railroad Company v. Townsend*, 190 U.S. 267, 271 (1903) (emphasis added). As further explained by the 9th Circuit:

> The 1864 Act grew out of Congress' efforts in the mid-19th Century, intensified by the Gold Rush and the Civil War, to settle the American West and provide a direct link to California. *Leo Sheep Co. v. United States,* 440 U.S. 668, 670-77, 99 S.Ct. 1403, 59 L.Ed.2d 677 (1979) (discussing in detail the history of this period of railroad development). Beginning in 1850, Congress passed a series of statutes granting public lands to private railroad companies to spur the construction of a cross-country railroad. *Great N. Ry. v. United States,* 315 U.S. 262, 273 & n. 6, 62 S.Ct. 529, 86 L.Ed. 836 (1942). During this period, Congress often granted the railroads alternate sections of land along the right of way-resulting in a "checker-board" of public and private lots-to further subsidize construction. *Leo Sheep Co.,* 440 U.S. at 672, 99 S.Ct. 1403.
>
> In subsequent years, the policy of granting "lavish" subsidies of public lands to railroads was met with increasing public disfavor. *Great N. Ry.,* 315 U.S. at 273-74, 62 S.Ct. 529. In the wake of the Credit Mobilier scandal in 1872, the House of Representatives adopted a resolution condemning the practice. Cong. Globe, 42d Cong., 2d Sess., 1585 (1872); *see Leo Sheep Co.,* 440 U.S. at 670-77, 99 S.Ct. 1403; *Great N. Ry.,* 315 U.S. at 273-74, 62 S.Ct. 529. Although this marked the end of

Preliminary Draft for Agency Review

> outright land grants, Congress continued to encourage development of the West through the General Railroad Right of Way Act of 1875, which provided easements to railroads across public lands. 43 U.S.C. § 934; *see also United States v. Union Pac. R. R.,* 353 U.S. 112, 119, 77 S.Ct. 685, 1 L.Ed.2d 693 (1957); *Great N. Ry.,* 315 U.S. at 273-76, 62 S.Ct. 529.
>
> Northern Pacific, like other railroad companies granted land prior to 1875, held title in the right of way in the form of a "limited fee, made on an implied condition of reverter in the event that the company ceased to use or retain the land for the purpose for which it was granted." *N. Pac. Ry. Co. v. Townsend,* 190 U.S. 267, 271, 23 S.Ct. 671, 47 L.Ed. 1044 (1903). Under *Townsend,* land granted to a railroad would revert to the United States in the event the railroad stopped using the right of way for railroad purposes. *Id.* at 271-72, 23 S.Ct. 671. Because of the United States' potential interest, a railroad did not have the power to voluntarily transfer its interest in the right of way, nor could a private party acquire title to any portion of the right of way by adverse possession. *Id.*

Avista Corporation Inc. v. Wolfe, 549 F.3d 1239, 1242-1243 (9th Cir. 2008) (emphasis added).

14. "A grant of land to a railroad for right of way purposes is substantially different from any like grant for other purposes. The character of the contemplated use makes it different. It is intended that the use by a railroad company will be perpetual and continuous. A railroad company performs a public service and is burdened with a public duty. In performance of that duty it is held to the exercise of the highest degree of care, and the complete, convenient, and safe use of its right of way requires that its possession be exclusive – a possession not shared with another; that it have complete dominion over its right of way and that it enjoy all those rights which usually attend the fee." *Lake CDA Investments, Inc. v. Idaho Dept. of Lands*, 149 Idaho 274, 282, 233 P.3d 721, 729 (2010) (emphasis added).

15. In an attachment to the IDL May 23, 2018 comments that are part of the record, a "Rand McNally & Co." map, circa 1890, shows the route of "the Northern Pacific Railroad Company Land Grant" in and around "Sand Point." Current aerial images in the record that

Preliminary Draft for Agency Review

were included with the Application show BNSF is utilizing land in the State of Idaho for a railroad, and that the railroad crosses Lake Pend Oreille and the mouth of Sand Creek.[2]

16. Evidence in the record, supported by the 1864 Act of Congress together with case law, shows BNSF, as a successor in interest to the Northern Pacific Railroad Company, was "granted . . . a right of way," *Goss* at 664, which is "title in . . . in the form of a 'limited fee, made on an implied condition of reverter in the event that the company ceased to use or retain the land for the purpose for which it was granted.'" *Wolfe* at 1242 citing *Townsend* at 271.

17. There is no evidence in the record suggesting BNSF is operating outside of, or inconsistently with its title to the right of way. As of today, and consistent with the cases cited above, BNSF holds title to its right of way, which is 400 feet wide, in the form of a grant of a limited fee with an implied condition of reverter. It is outside the scope of this proceeding to conclude in whom title to the beds and banks of Lake Pend Oreille and the mouth Sand Creek within the BNSF right of way would rest if there were a reverter. *See Idaho v. United States*, 533 U.S. 262, 272-73 (2001) (discussing Idaho's admittance into the Union, the equal footing doctrine, and presumptions of State ownership of the beds and banks of navigable waters).

18. As the owner of title to the right of way, which was granted to it by the federal government with an implied condition of reverter, BNSF meets the requirements of Idaho Code § 58-1306(a) and IDAPA 20.03.04.010.33. As will be discussed below, very little of the Application involves land outside the right of way.

iii. The Application was Timely Published

19. Third, "Within ten (10) days of receipt of an application . . . the board shall cause to be published . . . once a week for two (2) consecutive weeks, a notice advertising of the

[2] The mouth of Sand Creek, as will be explained below, falls within the purview of Idaho's Lake Protection Act.

Preliminary Draft for Agency Review

application and describing the proposed encroachment and general location thereof." Idaho Code § 58-1306(b). Here, the Application was received on February 22, 2018. Notice of the Application was published in the *Bonner County Daily Bee* for a period of two consecutive weeks, commencing on February 28, 2018 and ending March 7, 2018. *Affidavit of Publication*. Therefore, the Application was timely published.

iv. Comments were Taken

20. Fourth, "Any resident of the state of Idaho, or a nonresident owner or lessee of real property adjacent to the lake, or any state or federal agency may, within thirty (30) days of the first date of publication, file with the board an objection to the proposed encroachment and a request for a hearing on the application." Idaho Code § 58-1306(c). Here, the Department has been taking written comment for and against the Application since notice was published on February 28, 2018. Some of the comments were styled in the form of an objection requesting a hearing. Not all written comments stated they were filed by a "resident" or a "nonresident owner or lessee of real property adjacent to" Lake Pend Oreille. Indeed, many written comments were submitted by persons from areas outside Idaho, or anonymously. Nonetheless, all timely comments were considered by the hearing coordinator, as there was no way to discern if out-of-state comments were submitted by a nonresident owner or lessee of real property adjacent to the Lake.

21. While the notice stated that comments must have been received "within thirty (30) days after the first appearance of this notice," the Department continued to take written comments up until the close of the evening hearing on May 23, 2018. Therefore, the Department provided more than the statutorily required period of thirty days for receiving comments. Comments received after the close of the evening hearing on May 23, 2018 are untimely and

Preliminary Draft for Agency Review

were not considered. Comments concerning the preparation of an EA or EIS are questions of federal law that cannot be addressed by the Department, but will purportedly be addressed by the USCG and USACE.[3]

v. Hearings were Held

22. Fifth, a "hearing" may be held if an objection requesting a hearing is made, or upon the Department's own volition. Idaho Code § 58-1306(c). Here, the Director – in an exercise of discretion, and while only one hearing is required – ordered two hearings be held. Therefore, by holding two hearings, the singular hearing requirement of Idaho Code § 58-1306(c) is satisfied.

C. The Department Has Jurisdiction Over Lake Pend Oreille And Sand Creek

23. The Department is vested with the authority, in the interest of "public health, interest, safety and welfare [to regulate] all encroachments upon, in or above the beds of waters of navigable lakes of the state . . . in order that the protection of property, navigation, fish and wildlife habitat, aquatic life, recreation, aesthetic beauty and water quality be given due consideration and weighed against the navigational or economic necessity or justification for, or benefit to be derived from the proposed encroachment." Idaho Code § 58-1301.

24. BNSF proposes work in and above Lake Pend Oreille. *Application* at 2-3. Structures in the Lake include temporary and permanent piers and fill. *Id.* at 2. Structures above the Lake include the temporary construction bridge, and the permanent railroad bridge. *Id.* The

[3] It is possible there was some confusion regarding the filing of comments due to the fact that multiple agencies are involved. Applications, such as the one at issue in this proceeding, are filed jointly with IDL, the Idaho Department of Water Resources, and the USACE. *Application* at 1. As stated by Ms. Sugarman in her comments, the USCG is the lead agency, with the USACE assisting in a "cooperating" role. It is possible the comments filed after the close of IDL's hearings may have been directed toward USACE and USCG, which involves a separate, federal process. The conclusion made herein as to comments filed after the close of IDL's hearing applies only to IDL's record. No finding or conclusion is made as to the timeliness of any comments directed toward USACE or USCG. USACE and USCG may have different rules for consideration of comments than IDL.

Preliminary Draft for Agency Review

bridge and associated fill over the Lake are visually depicted in the attachments following page 8 of the Application. The Lake is a navigable body of water that is regulated by the Department. *Gasman v. Wilcox*, 54 Idaho 700, 702, 35 P.2d 265, ___ (1934). "In the early 1950s, the United States Army Corps of Engineers constructed the Albeni Falls dam on Lake Pend Oreille, thereby creating an artificial high water mark ('AHWM') approximately eleven and a half feet above the natural high water mark." *Kaseburg v. State of Idaho*, 154 Idaho 570, 572, 300 P.3d 1058, 1060 (2013). That the Lake is regulated by Albeni Falls dam with differences between the AHWM and Ordinary High Water Mark, is immaterial as to IDL's jurisdiction. *State of Idaho v. Hudson*, 162 Idaho 888, 893, 407 P.3d 202, 207 (2017).

25. BNSF also proposes work in and above Sand Creek. *Application* at 3. The bridge and associated fill over Sand Creek are visually depicted in the attachments following page 8 of the Application. A marina in the mouth of Sand Creek, which appears to be used to access the Lake, can be seen in the aerial images attached to the Application. The Lake Protection Act applies to "navigable lakes of the state . . . ." Idaho Code § 58-1301 (emphasis added). By its name, Sand Creek is not defined as a lake. However, according to Diane French, Land and Waterways Division Administrator for the Department, "The lake also extends up into the mouth of Sand Creek, which makes Bridge 3.1, the temporary bridge, and associated fills as shown in the application, subject to the Lake Protection Act. IDL has issued encroachment permits for docks and other structures placed in the Sand Creek slough. This includes the bridge and associated fills for the Highway 95 Sand Creek Byway." *IDL Comment* at 3 (May 23, 2018) (emphasis added). From the aerial images attached to the Application, and consistent with the unrebutted statement of Ms. French, it is difficult to see where Sand Creek ends and where the Lake begins. As the administrator of the Lake Protection Act, the Department's interpretation

Preliminary Draft for Agency Review

that the mouth of Sand Creek falls within the scope of the Lake Protection Act is reasonable, the Lake Protection Act does not treat the precise issue of a creek whose mouth is effectively one-in-the-same with a lake, and the rationales of deference present. *Pearl v. Board of Professional Discipline of Idaho State Board of Medicine*, 137 Idaho 107, 113, 44 P.3d 1162, 1168 (2002). Therefore, IDL's interpretation that the Lake Protection Act applies to the mouth of Sand Creek is entitled to "considerable weight." *Id.* Accordingly, the hearing coordinator accepts IDL's interpretation of the Lake Protection Act as applying to the mouth of Sand Creek, meaning BNSF's proposal to place temporary and permanent material and structures in and above Sand Creek is within the Department's jurisdiction.

D. The Application May Be Approved Because It Satisfies The Encroachment Standards And Is Consistent With The Public Trust Doctrine

26. Consideration of an application for encroachment requires the balancing of private versus public interests:

> The legislature of the state of Idaho hereby declares that the public health, interest, safety and welfare requires that all encroachments upon, in or above the beds or waters of navigable lakes of the state be regulated in order that the protection of property, navigation, fish and wildlife habitat, aquatic life, recreation, aesthetic beauty and water quality be given due consideration and weighed against the navigational or economic necessity or justification for, or benefit to be derived from the proposed encroachment. No encroachment on, in or above the beds or waters of any navigable lake in the state shall hereafter be made unless approval therefor has been given as provided in this act.

Idaho Code § 58-1301.

27. "Encroachments not in aid of navigation in navigable lakes will normally not be approved by the Department and will be considered only in cases involving major environmental, economic, or social benefits to the general public. Approval under these circumstances is authorized only when consistent with the public trust doctrine and when there is no other feasible alternative with less impact on public trust values." IDAPA 20.03.04.030.02.

Preliminary Draft for Agency Review

28. The public trust doctrine is "a limitation on the power of the state to alienate or encumber title to the beds of navigable waters as defined in this chapter." Idaho Code § 58-1203(1). As explained by the Idaho Supreme Court, the following factors should be considered in evaluating an application for encroachment:

> [T]he degree of effect of the project on public trust uses, navigation, fishing, recreation and commerce; the impact of the individual project on the public trust resource; the impact of the individual project when examined cumulatively with existing impediments to full use of the public trust resource, i.e. in this instance the proportion of the lake taken up by docks, moorings or other impediments; the impact of the project on the public trust resource when that resource is examined in light of the primary purpose for which the resource is suited, i.e. commerce, navigation, fishing or recreation; and the degree to which broad public uses are set aside in favor of more limited or private ones.

Kootenai Env. Alliance, Inc. v. Panhandle Yacht Club, Inc., 105 Idaho 622, 629-30, 671 P.2d 1085, 1092-93 (1983) (hereinafter "KEA").

29. In evaluating the factors set forth in Idaho Code § 58-1301, IDAPA 20.03.04.030.02, and *KEA*, and as will be explained below, the Application may be approved because it satisfies the encroachment standards and satisfies the public trust doctrine.

i. Fill and Structures within the BNSF Right of Way

30. It is important that, according to IDL's review of the Application, "all permanent fill and structures would occur within the authorized BNSF right of way." *IDL Comment* at 3 (emphasis added). As the owner of the right of way, albeit with an implied right of reverter, *Townsend*, *Wolfe*, *Goss*, BNSF is entitled to exclusive possession to "perform[] a public service and is burdened with a public duty . . . to exercise the highest degree of care, and the complete, convenient, and safe use of the right of way requires that its possession be exclusive . . . ." *Lake CDA Investments* at 282, 233 P.3d at 729. Due to the fact that the permanent fill and structures are within the right of way, which is presently within BNSF's exclusive control, the Lake Protection Act arguably does not apply.

Preliminary Draft for Agency Review

31. If the Lake Protection Act does apply, the Application may still be granted. The Department and BNSF have recognized, in the past, that work within BNSF's right of way requires permitting, as evidenced by prior IDL permit no. *ERL-96-S-96D* (June 1, 2009); *see also IDL Comment* at 2 (May 23, 2018) (discussing prior BNSF permits from IDL). Moreover, in reviewing the Application itself, it can be seen that BNSF does not argue the Lake Protection Act is inapplicable. Indeed, BNSF took all necessary steps to complete the Application, providing the necessary language and plans for review by IDL. Consistent with the testimony of Pierre Bordenave, BNSF reduced the impacted footprint of the project from approximately 5 acres to something closer to one-acre, possibly evidencing BNSF's belief it should take the necessary steps to comply with the Lake Protection Act. *Evening Hearing Transcript* at 28. BNSF could have advanced an argument in the Application, or at the hearings against needing IDL approval for its work; however, BNSF did not.

32. As stated previously, and if the Lake Protection Act does apply, the Application may only be approved if it can be "regulated in order that the protection of property, navigation, fish and wildlife habitat, aquatic life, recreation, aesthetic beauty and water quality be given due consideration and weighed against the navigational or economic necessity or justification for, or benefit to be derived from the proposed encroachment." Idaho Code § 58-1301. As will be explained, below, weighing the above-stated values against the benefit of the project, the preponderance of the evidence leans in favor of approving the Application.

33. As to protection of property, and as concluded by IDL in its May 23, 2018 comments, the permanent fill and structures will occur wholly within BNSF's right of way. *See Lake CDA Investments* at 282, 233 P.3d at 729 (discussing the exclusive right of way for railroads and its relation to public safety). By staying within the right of way, the project

Preliminary Draft for Agency Review

protects others' property. Arguably, the addition of a second bridge will aid in protection of property by improving emergency response times for first responders, such as fire, medical, and police services. *See Comment from Bonner County Emergency Medical Services* (March 19, 2018).

34. As to protection of navigation and recreation, and as stated in the Application and shown in the PowerPoints, the new spans and piers will be greater than the existing spans and piers in width, and will be equal to or greater than existing vertical clearances. These construction standards should not hinder navigation or recreation, as the area is already occupied by bridges and piers. An addendum to the Application, submitted by BNSF pursuant to IDAPA 20.03.04.015.13.g, further addresses navigational concerns.

35. As to protection of fish and wildlife habitat and aquatic life, there were general comments regarding detriment to aquatic species. *See Morning Transcript* at 39, 48. Those concerns, while well taken, are addressed through comments from F&G. According to F&G, the noise associated with the project will "not produce underwater noise levels harmful to fish . . . vibratory hammers obviate the need for noise attenuation, thus we are no longer recommending bubble curtains." *F&G Comment* at 2 (May 14, 2018). Furthermore, "Bubble curtains would likely create turbidity problems in Sand Creek Slough. As an alternative, work will be completed during low water, to reduce noise impacts when native salmonids are unlikely to be present." *Id.*

36. As to protection of water quality, there were general comments made regarding impacts due to coal dust and possible spills. *See Comment from Wes Hanson* (March 23, 2018); *Morning Transcript* at 52; *Evening Transcript* at 49. Those concerns, while well taken, are addressed through comments from DEQ and F&G. Included in the record is a letter from the

Preliminary Draft for Agency Review

Idaho Department of Environmental Quality ("IDEQ"), dated April 13, 2018, to BNSF regarding IDEQ's draft § 401 Water Quality Certification. That letter indicates there is a separate proceeding, including a public comment period, as to water quality issues. Comments from F&G further address water quality concerns: "Potential containment resuspension associated with pile driving and removal is not expected to affect water quality, thus sediment core samples were not required under the draft 401 Water Quality Certification. We defer to the Idaho Department of Environmental Quality's assessment of this risk and their condition of the final permit." *F&G Comment* at 2 (May 14, 2018). "While adding a second bridge increases capacity and improves operational efficiency, BNSF representatives clarified that markets determine rail traffic regardless of whether or not the second bridge is constructed; thus there would be no increase to spill risk beyond the temporary risk associated with construction equipment working over the water. These temporary risks are addressed in the hazmat and water quality protection plans." *Id.* (emphasis added).

37. As to aesthetic beauty, there were general comments in the record that approval of the Application would result in harm, *see Comment from Ron Giddings* (March 29, 2018); *Morning Transcript* at 43, or create better aesthetics in an area already known for rail traffic, *see Evening Transcript* at 51.

38. The factors discussed above must then be weighed against the "navigational or economic necessity or justification for, or benefit to be derived from the proposed encroachment." Idaho Code § 58-1301. General comments in the record argue for and against the economic necessity for the project. *See Comment from Cynthia Zapotocky* (March 30, 2018); *Comment from Executive Director of the Lake Pend Oreille Waterkeeper* (May 22, 2018); *Comment from John M. Anderson* (May 23, 2018); *Evening Transcript* at 72. Specific evidence

Preliminary Draft for Agency Review

in the record, as shown in the BNSF PowerPoints and testimony of Pierre Bordenave and Courtney Wallace, suggests otherwise. Approval of the Application will result in the investment of "upwards of a hundred million dollars in private investment for world class infrastructure . . . and help improve the flow of traffic both for Amtrak as well as freight. . . . . This single track bridge over Lake Pend Oreille funnels rail traffic down to one lane shared by both directions. It slows trains as they come to Sandpoint . . . . By building a second main line bridge over the lake, trains will move across the lake in both directions at the same time reducing the time trains must wait for other trains to cross the bridge. Freight will be able to continue to move and get through the area much more efficiently . . . ." *Evening Transcript* at 20-21, 23 (Courtney Wallace). "I'm sure you've heard – many of you have heard or read the claims that by building this connector, it's somehow going to double the number of trans. And of course, that – there's no basis to that claim. I've already said before, yes, there's – there has every decade been more trains, but it doesn't double trains. There's absolutely no basis to that assumption. That – that then becomes the foundation of speculation and conjecture and then leads to projections and conclusions. . . . . This is not a case of Field of Dreams; if you build it, they will come. The project is not based on speculation. . . . This project does not create a demand. What it does is it addresses an existing defined need." *Id.* at 26 (Pierre Bordenave).

39. Weighing the factors contained in Idaho Code § 58-1301 the preponderance of the evidence leans in favor of granting the Application.

40. Encroachments not in aid of navigation may be "authorized only when consistent with the public trust doctrine and when there is <u>no other feasible alternative with less impact on public trust values</u>." IDAPA 20.03.04.030.02 (emphasis added).

Preliminary Draft for Agency Review

41. Here, the Application stated it reviewed other alternatives for the project, but that what is proposed "is the least environmentally damaging practicable alternative that meets the project purpose while addressing geographic and BNSF design and safe rail operations constraints." *Application* at 5. The fact that BNSF possesses a right of way for this project, that BNSF considered other alternatives, and the fact that the right of way is already occupied by railroad development – as will be discussed below – weighs in favor of determining the Application meets the requirements of IDAPA 20.03.04.030.02.

42. If compliance with the public trust doctrine is not met, an encroachment not in aid of navigation cannot be approved. As stated in *KEA*, the public trust doctrine examines "the individual project . . . cumulatively with existing impediments to full use of the public trust resource, i.e. in this instance the proportion of the lake taken up by docks, moorings or other impediments . . . ." *KEA* at 629-30, 671 at 1092-93 (emphasis added).

43. Here, the Application satisfies the satisfies the public trust doctrine. As seen in the aerial images accompanying the Application and the PowerPoints that were presented at the morning and evening hearings, the areas within the BNSF right of way across Lake Pend Oreille and over the mouth of Sand Creek are occupied by railroad development, which are located by virtue of Congress' 1864 grant of the right of way, and have been present since circa 1890. As also seen in those images, the areas near the railroad development are taken up by State Highway 95, docks, industrial areas, and a marina in the mouth of Sand Creek. When this Application is examined cumulatively with existing impediments in this particular area of the Lake and the mouth of Sand Creek, *KEA* at 629-30, 671 at 1092-93, the Application satisfies the public trust doctrine.

Preliminary Draft for Agency Review

ii. Temporary Fill and Structures Outside the BNSF Right of Way

44. As for use of land outside the right of way, IDL's analysis of the Application states: "About 250 feet of the temporary bridge, and a few square feet of temporary fill on the north side of Sand Creek bridge area, would be outside the right of way. IDL considers this a temporary impact to the area between the Sand Creek shoreline and the existing Highway 95 Bridge, and is not expected to impact the adjacent property managed by the Idaho Transportation Department for Highway 95." *Id.*

45. The standards for approving encroachments under the Lake Protection Act and the requirement of examining the public trust doctrine have been stated previously and will not be repeated. Furthermore, the analysis for approving permanent and temporary structures within the BNSF right of way have been stated previously and will not be repeated. Both the legal and factual analyses stated above in regard to approval of permanent and temporary structures within the BNSF right of way apply to the approximately 250 feet of temporary bridge and a few square feet of temporary fill on the north side of Sand Creek outside the BNSF right of way. Accordingly, the approximately 250 feet of temporary bridge and a few square feet of temporary fill on the north side of Sand Creek that are outside the BNSF right of way may be approved, provided those lands are restored.

ORDER

Based on the foregoing findings of fact and conclusions of law, IT IS HEREBY ORDERED that Encroachment Permit Application No. L-96-S-0096E is APPROVED, subject to any conditions imposed by the Director of the Idaho Department of Lands, such as those for construction, bridge lighting, other navigational markings or aids for the project, and restoration

Preliminary Draft for Agency Review

of lands used for the temporary bridge and few square feet of fill on the north side of Sand Creek.

IT IS FURTHER ORDERED that the order issued herein is a PRELIMINARY ORDER. Idaho Code § 58-1306(c); Idaho Code § 67-5240; Idaho Code § 67-5245; *Notice of Appointment of Hearing Coordinator and Hearing*. The hearing in this matter was completed on May 23, 2018. Consistent with the *Notice of Appointment of Hearing Coordinator and Hearing*, "The Hearing Coordinator shall submit a preliminary order to the Director of the Idaho Department of Lands, who shall issue a Final Order no more than thirty days after the conclusion of the hearing." This Preliminary Order is submitted fewer than thirty days after conclusion of the hearing.

Dated this 14th day of June, 2018.

CHRIS M. BROMLEY
Hearing Coordinator

Preliminary Draft for Agency Review

CERTIFICATE OF SERVICE

I certify that on this 14th day of June, 2018, I caused to be served a true and correct copy of the foregoing was served upon the following persons by the method(s) indicated:

Angela Schaer Kaufmann P.O. Box 83720 Boise, ID 83720-0010	☐ Statehouse Mail ☐ Hand Delivery ☐ Federal Express ☒ Email: angela.kaufmann@ag.idaho.gov
David Groeschl Acting Director Idaho Dept. of Lands P.O. Box 83720 Boise, ID 83720-0050	☐ U.S. Mail, postage prepaid ☐ Hand Delivery ☐ Facsimile: ☒ Email: dgroeschl@idl.idaho.gov

CHRIS M. BROMLEY

Preliminary Draft for Agency Review

Preliminary Draft for Agency Review

Appendix I

Visual Impact Analysis

Preliminary Draft for Agency Review

VISUAL IMPACT ANALYSIS
BNSF Sandpoint Junction Connector Project

Bonner County, Idaho

Preliminary Draft for Agency Review

U.S. Coast Guard
District Thirteen
Seattle, Washington

August 6, 2018

TABLE OF CONTENTS

ABBREVIATIONS AND ACRONYMS ..... **iii**
1.0 INTRODUCTION **1**
1.1 Purpose 2
1.2 Regulatory Context 2
2.0 VISUAL ASSESSMENT METHODOLOGY **3**
2.1 Visual Character Assessment Methodology 3
2.2 What is the FHWA Assessment Method? 3
2.2.1 Visual Quality 3
3.0 AREA OF VISUAL EFFECT **4**
3.1 Types of Viewers 4
4.0 AFFECTED ENVIRONMENT **6**
4.1 Key View 1 6
4.2 Key View 2 8
4.3 Key View 3 10
4.4 Key View 4 12
5.0 IMPACT SUMMARY **14**
5.1 New Sources of Shadow, Glare, or Light 14
5.2 Visual Impacts During Construction 14
5.3 Summary of Impacts 14
6.0 MINIMIZATION AND MITIGATION MEASURES **15**
6.1 Construction-Related Mitigation 15
6.2 Design-Related Minimization 15
7.0 CUMULATIVE EFFECTS TO VISUAL QUALITY **16**
8.0 REFERENCES **17**

FIGURES

Figure 1: Key View Map 5

TABLES

Table 1: Key View 1 Visual Quality Rating 6
Table 2: Key View 2 Visual Quality Rating 8
Table 3: Key View 3 Visual Quality Rating 10
Table 4: Key View 4 Visual Quality Rating 12

Preliminary Draft for Agency Review

ABBREVIATIONS AND ACRONYMS

BNSF	BNSF Railway Company
CFR	Code of Federal Regulations
FHWA	Federal Highway Administration
LPO	Lake Pend Oreille
MP	milepost
MRL	Montana Rail Link
NEPA	National Environmental Policy Act
Project	BNSF Sandpoint Junction Connector Project
US 95	U.S. Route 95
USC	United States Code

Preliminary Draft for Agency Review

1.0 INTRODUCTION

The purpose of the BNSF Sandpoint Junction Connector Project (Project) is to reduce the delay of freight and passenger rail traffic by increasing the operational efficiency of the BNSF Railway Company (BNSF) freight rail system between its Algoma Siding track south of Sandpoint (BNSF milepost [MP] 5.1) and the Sandpoint Junction (MP 2.9), where BNSF and the Montana Rail Link (MRL) main line tracks join just north of the Sandpoint Amtrak Station.

The BNSF northern tier is a high-volume traffic corridor that connects both the Midwest Chicago Terminus and Canada to the West Coast. This rail corridor moves key commodities such as wheat, corn, and soybeans from the northern tier of Midwest states to West Coast ports of Seattle, Tacoma, and Vancouver, Washington, making it a critical transportation link in the international delivery of agricultural products. This corridor also serves as Amtrak's only route across the northern United States (the "Empire Builder"), connecting the Midwest (Chicago) with the West Coast, making it an important piece of the passenger rail system. Rail traffic volumes have risen steadily for the past three decades on this portion of the interstate main line, increasing the economic significance of the corridor. Currently, approximately 60 trains use this section of track per day, resulting in nearly 22,000 overwater crossings per year.

Two sections of Line Segment 45 have two parallel main line tracks ending at Algoma (BNSF MP 5.1) and Sandpoint Junction (BNSF MP 2.9). These sections of double track are separated by a 2.2-mile section with only one main line track over Sand Creek and Lake Pend Oreille (LPO), which dates from the early 1900s. Sandpoint Junction is located at the north end of the single-track section, just north of the Sandpoint Amtrak Station, where an MRL siding track meets two main line tracks (BNSF and MRL). At the south end of the single-track section, the main line intersects with the BNSF Algoma (East) Siding track.

The 2.2-mile segment of single main line track is a constraint to safe and efficient rail movement in the BNSF northern tier, resulting in local and regional impacts to shipping and interstate commerce. The existing single-track configuration causes trains to back up on existing sidings and rail yards for up to 30 minutes, waiting for an opening to cross the bottleneck.

Trains waiting for a crossing opportunity cause long vehicular wait times on local county and city streets at public at-grade rail crossings. The delay in train and truck traffic results in a delay of the local and regional transport of people, goods, and services.

Rail traffic in this corridor has increased as a result of population growth and the corresponding increase in the demand for freight, and will likely continue this trend. The existing bridges over Sand Creek and LPO have the physical capacity to move more trains, but additional train volumes would increase congestion and delays, negatively impacting North Idaho communities and communities throughout the BNSF network. If the constriction at this location is not addressed, the delay is expected to increase, resulting in a lower level of service for both rail and vehicle traffic and further constraining the movement of goods and services at a local, regional, national, and international level.

Deteriorating rail service may also cause shippers with alternative options, such as consumer product containers, to convert to highway transportation by truck. One double-stack intermodal train carries the same cargo as 280 trucks that would be diverted to publicly funded highways, producing negative highway congestion, economic impacts, and safety impacts.

Preliminary Draft for Agency Review

The Proposed Action Alternative involves the construction of an approximately 2.2-mile-long second main line track west of the existing BNSF main line to connect the Algoma Siding track (MP 5.1) south of Sandpoint, to the Sandpoint Junction switch (MP 2.9), where the BNSF and the MRL main lines converge in Sandpoint. This alternative includes constructing three new bridges over Bridge Street (Bridge 3.0), Sand Creek (Bridge 3.1), and LPO (Bridge 3.9).

1.1 Purpose

The purpose of the Visual Impact Analysis is to document visual changes that may be perceived by people viewing the bridges both during construction and over the life of the new bridges. Because of the public nature and visual importance of these bridges to the surrounding area, both positive and negative visual impacts must be adequately assessed and disclosed. The visual analysis, along with minimization recommendations, is intended to provide decision makers with information and recommendations on minimizing negative impacts on visual quality and to provide opportunities to enhance existing visual quality and community aesthetics within the scope of the Project.

1.2 Regulatory Context

The National Environmental Policy Act (NEPA) requires that an environmental analysis be performed during project development to minimize harm to the human, physical, or biological environment.

Section 101(b)(2) of NEPA (§4321 of Title 42 of the United States Code [USC]; 42 USC 4321) states that it is the “continuous responsibility” of the federal government to “use all practicable means” to “assure for all Americans safe, healthful, productive, and esthetically and culturally pleasing surroundings.” Federal implementing regulations are Part 771 of Title 23 of the Code of Federal Regulations (CFR; 23 CFR 771; Federal Highway Administration [FHWA]) and 40 CFR 1500–1508.

According to the Council on Environmental Quality implementing regulations, environmental analysis is to consider impacts on “Urban quality, historic and cultural resources, and the design of the built environment . . .” (40 CFR 1502.16[g]). Agencies will “Identify methods and procedures . . . to insure that presently unquantified environmental amenities and values may be given appropriate consideration” (40 CFR 1507.2[b]).

The visual quality analysis for this Project was conducted in accordance with the U.S. Department of Transportation’s, *FHWA Guidelines for the Visual Impact Assessment of Highway Projects* (FHWA 2015). While this Project is not subject to this policy, the guidelines provide a useful and widely accepted framework for analyzing visual impacts.

Preliminary Draft for Agency Review

2.0 VISUAL ASSESSMENT METHODOLOGY

2.1 Visual Character Assessment Methodology

The visual experience is an important component of a project and its impact on the environment. How a project functions as a facility is closely allied with how it looks and fits into the natural or built environment, and how well it is accepted by the population.

2.2 What is the FHWA Assessment Method?

Although visual quality is inherently subjective, the FHWA methodology provides definitions and a process for evaluating existing and proposed views. By following this process, the assessment is repeatable by other experts.

2.2.1 Visual Quality

Landform, water, vegetation, and man-made elements are all analyzed according to three criteria. The three criteria used to perform an evaluative appraisal of the landscape visual quality are vividness (or memorability), intactness, and unity.

Each of the three criteria is independent. Each is intended to evaluate one aspect of visual quality. The process in a visual impact analysis generally follows these steps:

1. Determine the project elements and their extent. This involves understanding all of the elements that may occur as a result of the project, such as conversion of farm fields to suburban uses or stormwater treatment areas.
2. Determine the visual extent of the project; this may extend far beyond the construction limits.
3. Determine who has views toward the project, and what the views will be from the facility.
4. Evaluate viewer "sensitivity." In general, a person living along or next to the project will be more "sensitive" to visual changes than a traveler passing through once, because the resident's duration or frequency of view will be greater. The number of viewers is also considered for selection of representative views.
5. Describe and evaluate representative views of the landscape before the project.
6. Describe and evaluate the same representative views from and toward the project after its construction. This is possible because of the understanding gained in Step 1 and continuing conversation with the design team. It may also consider computer design simulations or models.

The 1988 FHWA methodology used a numerical rating system for views. The current system was taken out of the 2015 methodology, but it is a useful tool to understand how and why the view ratings increase or decrease and is used for this report.

Preliminary Draft for Agency Review

3.0 AREA OF VISUAL EFFECT

The area of visual effect, or viewshed, is defined as areas with a line of sight (exclusive of vegetation) looking toward and away from the Project. The viewshed is larger than the Project area because built and natural features determine what can and cannot be seen. This Project's viewshed was determined by reviewing photograph, plans, aerial mapping, and topographical information.

3.1 Types of Viewers

Viewers of the Project can be described as either static or dynamic. Dynamic viewers are those moving through the Project area, such as boats on LPO and Sand Creek and motorists on Bridge Street. Motor vehicle operators can be further divided into local homeowners, recreationalists, freight movers, and commuters. Static viewers include people viewing the new rail bridges from homes or businesses.

Views toward the bridges will be from local homes and businesses, drivers on Bridge Street and US 95, and from the water by boaters.

Views from the new Bridge 3.1 will be of short duration, while trains are moving, and any changes in the existing Bridge 3.1 itself will not be highly visible from the train. Views from the new Bridge 3.9 will be of longer duration, and the parallel existing Bridge 3.9 will be visible as the train crosses LPO. However, these views will be of short duration, and LPO will be visible beyond the parallel track. Many trains using this route carry freight, and the engineers operating the trains are there for business; while they may enjoy the view, they are working and likely less sensitive to changes in the view because they understand the need for additional structure.

Drivers on local roads are presumed to be less sensitive to the view of the bridges than recreational users who view the lake and rail bridges from the nearby roadside park, hotel, and marina. There are homes with views of the bridges. Some condos have nearby views, while homes on the hill above the south end of Bridge 3.9 have more distant views of frequent and long duration. All of these viewers are presumed to be highly sensitive to changes in the view.

To effectively analyze the visual impacts of the Project, Key Views were established to best represent the views of the above users. Figure 1 illustrates key view locations.

Preliminary Draft for Agency Review

Figure 1: Key View Map

Preliminary Draft for Agency Review

4.0 AFFECTED ENVIRONMENT

4.1 Key View 1

Key View 1a represents views of Bridge 3.0 from Bridge Street looking east. Bridge Street is in the foreground with Bridge 3.0 in the middle ground view. City Beach Park on Lake Pend Oreille is in the background view. The current bridge has two lanes with pedestrian tunnels on either side of the road. This view has an average total visual quality rating.

For context, the below photograph is a view of U.S. Route 95 (US 95) from Bridge Street looking east. Note the color on the bridge support beam.

The new Bridge 3.0 (Key View 1b) will have a wider opening to accommodate both the road and sidewalks on either side. The red beam over the roadway continues the color theme used on the bridge supporting US 95. Large shrubs and trees will be removed as part of the Project so the vegetation rating will decrease slightly, but the rating for man-made structures will increase slightly because of the more open structure and the color tie-in with the nearby US 95 bridge over Bridge Street, resulting in an equivalent total visual quality rating.

Table 1: Key View 1 Visual Quality Rating

Key View 1	Vividness Rating	Intactness Rating	Unity Rating	Total Visual Quality Rating
Existing Condition	2.8	4	4	3.58
Proposed Project	2.8	4	4	3.58

Preliminary Draft for Agency Review

Key View 1a: **Bridge 3.0 viewing east from Bridge Street**.

Key View 1b: **Simulation of new Bridge 3.0 from Bridge Street**.

Preliminary Draft for Agency Review

4.2 Key View 2

Key View 2a represents views of Bridge 3.1 over Sand Creek, from the water. The marina at City Beach Park can be seen in the background. This is a view that recreational boaters would have. The foreground view is of Sand Creek. The middle ground view is of Bridge 3.1. Just outside the view on the left is US 95. The existing bridge is a visual encroachment in what would be an intact, unified scene. The existing total visual quality ratings are moderately high.

The Project will remove the trees between the existing rail bridge and US 95 (Key View 2b). This will lower vividness ratings for vegetation. The new Bridge 3.1 will be constructed between the existing rail bridge and US 95. The new bridge will continue the visual theme of the red beam over the channel that is proposed over Bridge Street. It will screen the older bridge from this view point. While the bridge will still be an encroachment on a lake view, the more unified design theme will raise the ratings for man-made elements, which offsets the decrease in the rating for vegetation.

Table 2: Key View 2 Visual Quality Rating

Key View 2	Vividness Rating	Intactness Rating	Unity Rating	Total Visual Quality Rating
Existing Condition	3.3	4	5	3.58
Proposed Project	3.3	4	5	3.58

Preliminary Draft for Agency Review

Key View 2a: **Bridge 3.1 over Sand Creek, viewing northwest from the water**.

Key View 2b: **Simulation of new Bridge 3.1 over Sand Creek**.

Preliminary Draft for Agency Review

4.3 Key View 3

Key View 3a is of Bridge 3.1 from US 95. The foreground view is of the highway. Bridge 3.1 and Sand Creek are in the middle ground view. The city of Sandpoint and the hills beyond make up the background view. This is an urban view of a developed area with average total visual quality ratings. The trees in the center of the view raise the rating for vegetation, but the existing Bridge 3.1 encroaches on the view from the roadway.

After Project completion, the trees in the center of the view will be gone and the new bridge will screen the old bridge from this viewpoint. As in Key View 3b, the more unified design theme will raise the ratings for man-made elements, which offsets the decrease in the rating for vegetation.

Table 3: Key View 3 Visual Quality Rating

Key View 3	Vividness Rating	Intactness Rating	Unity Rating	Total Visual Quality Rating
Existing Condition	3.0	4	4	3.67
Proposed Project	3.0	4	4	3.67

Preliminary Draft for Agency Review

Key View 3a: **Bridge 3.1 from US 95 viewing northeast**.

Key View 3b: **Simulation of new Bridge 3.1 between US 95 and the existing Bridge 3.1**.

Preliminary Draft for Agency Review

4.4 Key View 4

Key View 4a shows Bridge 3.9 over LPO viewing from the northwest shoreline. The foreground view is of LPO. Bridge 3.9 and a cluster of deciduous trees are in the middle ground view. The hills beyond are in the background view. The rail line introduces a man-made element that breaks up the unity of a natural scene, but the expansive views of the water and the tree covered hills beyond make this a viewpoint with high visual quality.

After Project construction the trees in the middle ground view will be removed (Key View 4b). The shoreline will be restored using native shrubs at the toe of slope. The expansive views of the water and the tree-covered hills beyond will remain with Bridge 3.9, providing the only break in the visual unity of the scene. The total visual quality rating will be slightly lower because of the removal of the trees in the middle ground, but the total visual quality rating remains high.

Table 4: Key View 4 Visual Quality Rating

Key View 4	Vividness Rating	Intactness Rating	Unity Rating	Total Visual Quality Rating
Existing Condition	5.5	5	5	5.17
Proposed Project	5.3	5	5	5.08

Preliminary Draft for Agency Review

Key View 4a: **Existing Bridge 3.9 from the north shoreline of Pend Oreille River**.

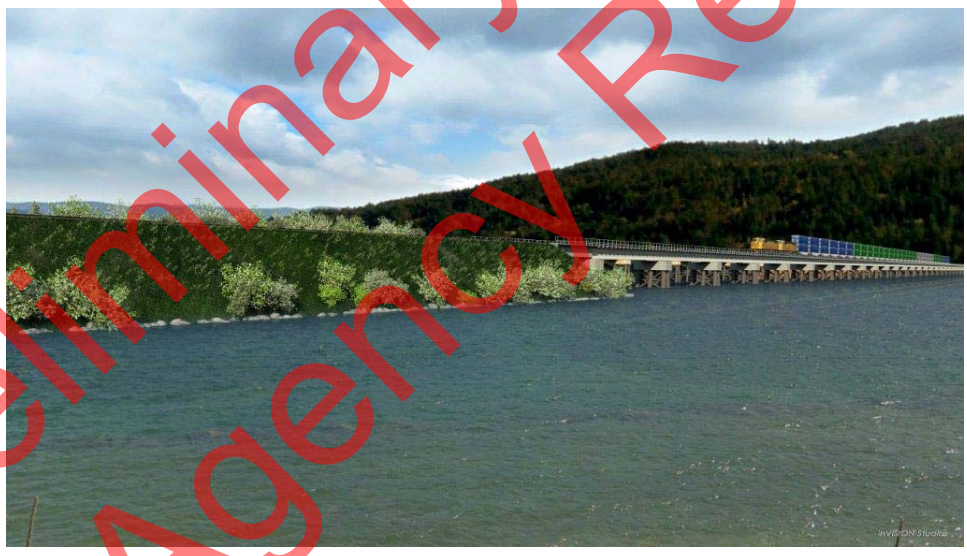

Key View 4b: **Simulation of new Bridge 3.9 from the north shoreline of Pend Oreille River**.

Preliminary Draft for Agency Review

5.0 IMPACT SUMMARY

5.1 New Sources of Shadow, Glare, or Light

Navigational lighting is currently in place on the bridges. Fixed navigational lighting, as required by the U.S. Coast Guard and by the Idaho Department of Lands, will be implemented on the new bridges. Lighting will be comparable to the existing navigational lighting.

5.2 Visual Impacts During Construction

Construction is currently estimated to take three years and will be done in multiple stages. The new bridges will be constructed parallel to and at the same height as the existing bridges. Temporary work bridges will be built adjacent to the west and parallel to both bridges 3.1 and 3.9.

Temporary work bridges will have navigation and moorage lighting as required by the U.S. Coast Guard . There will be a temporary increase in signs in the work zone to alert people to submerged work-related items such as turbidity curtain cables, service boat anchor lines, and to show navigation channels during construction.

For the duration of construction, this will be a very active work zone, which may provide visual interest as well as encroachment on views of Sand Creek and Lake Pend Oreille.

5.3 Summary of Impacts

The addition of a second track will not create substantial adverse impacts on visual quality. Locating the new track alignment between and at the same elevation as the existing US 95 and rail line is the least visually intrusive placement possible. Minor adverse changes to views of the natural environment are anticipated with the removal of trees to accommodate the new track. The impacts do not rise to the level of a substantial impact (1.0 change in rating). This Project has the potential to improve the views toward City Beach Park from Bridge Street should the older span ever be replaced with a newer, wider span to match this proposed Sandpoint Junction Connector structure.

Preliminary Draft for Agency Review

6.0 MINIMIZATION AND MITIGATION MEASURES

It is BNSF policy to avoid, minimize, and mitigate for negative project impacts, in that order. Preliminary engineering design avoids and minimizes impacts throughout the Project. This report makes recommendations to minimize negative visual impacts from new bridges.

6.1 Construction-Related Mitigation

Construction-related activities are temporary and require no mitigation. Fugitive light from light sources used for construction should be minimized and directed only on the work zone. Where feasible, limit construction to daylight hours.

6.2 Design-Related Minimization

The proposed Project will not create substantial adverse impacts on visual quality, there will be minor adverse changes to the natural environment by the removal of trees. The following minimization measures could improve the post-construction visual quality ratings if implemented:

- Ensure materials for permanent structures are non-reflective and colored to blend with the surroundings.
- Carry the color theme forward on horizontal rail bridge beams to match the color of the beam across Bridge Street that supports US 95.
- Where feasible, plant trees to mitigate for the removal of trees within Project limits.

Preliminary Draft for Agency Review

7.0 CUMULATIVE EFFECTS TO VISUAL QUALITY

Under NEPA, cumulative effects result from the incremental effects of a project when added to other past, present, and reasonably foreseeable future actions, regardless of what agency or person undertakes the other actions. Should the older span over Bridge Street ever be replaced, it has the potential to improve visual quality at that location by opening up the view as people are moving under the bridges.

Preliminary Draft for Agency Review

8.0 REFERENCES

Federal Highway Administration (FHWA), U.S. Department of Transportation. 1988. *Visual Assessment for Highway Projects*. Publication No. FHWA-HI-88-054.

———. 2015. *Guidelines for the Visual Impact Assessment of Highway Projects*. Publication No. FHWA-HEP-15-029. January.

Preliminary Draft for Agency Review

Appendix J

Lake Pend Oreille Geographic Response Plan

Preliminary Draft for Agency Review

USCG0015843/27

LAKE PEND OREILLE AND PEND OREILLE RIVER

Geographic Response Plan

Preliminary Draft for Agency Review

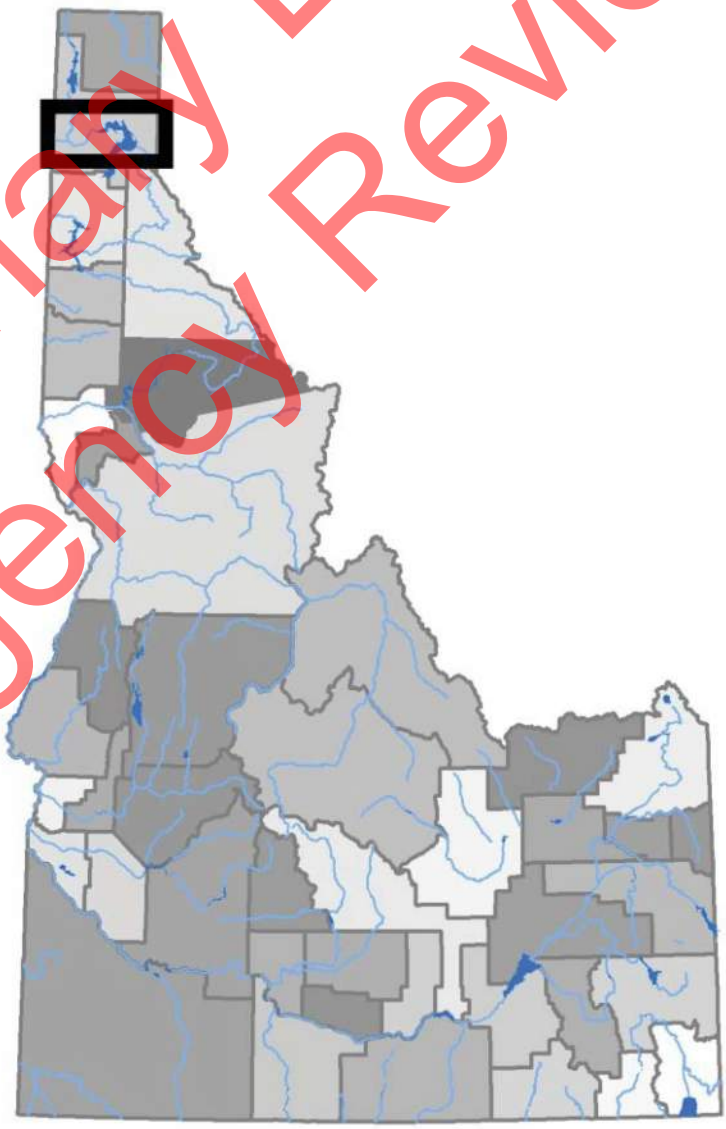

This page intentionally left blank for correct double-sided printing.

Preliminary Draft for Agency Review

USCG0015863/27

LAKE PEND OREILLE AND PEND OREILLE RIVER

GEOGRAPHIC RESPONSE PLAN

June 2017

Preliminary Draft for Agency Review

This page intentionally left blank for correct double-sided printing.

Preliminary Draft for Agency Review

Emergency Contact Sheet

Required Notifications Activation of StateComm through the 911 system will automatically include these notifications			
National Response Center	**800-424-8802**	Idaho Dept. of Environmental Quality, Coeur d'Alene Regional Office	208-769-1422 208-660-9285
Idaho Department of Environmental Quality	**855-647-3777**	Idaho State Communications Center	800-632-8000

Railroad Contacts	
BNSF Resource Operations Center	800-832-5452
BNSF Mgr. Hazmat Planning	406-202-8051
BNSF Director Hazmat, Special Ops	817-821-1325
Union Pacific Railroad Response Management Communication Center	888-877-7267
Montana Rail Link Emergency Hotline	800-498-4838

Federal	
U.S. EPA Region 10 Spill Response Team	206-553-1263
Coast Guard Watchstander	503-240-9301
Coast Guard Pacific Strike Team	415-883-3311
Coast Guard Region 13 Officer of the Day	206-217-6004
U.S. Fish Wildlife Service—Spokane	509-891-6839
U.S. Forest Service—Sandpoint Ranger District	208-263-5111
U.S. Army Corp Of Engineers—District Office / Albeni Falls Dam	206-764-3690 208-437-3133
NOAA Weather Spokane	509-244-0537
NOAA Hazmat Response	206-526-4911
NOAA Scientific Support Coordinator	206-849-9926
U.S. Fish Wildlife Service—Boise, ID	208-378-5243

Preliminary Draft for Agency Review

Water Supply Contacts	
Clark Fork Public Water Supply	208-266-1853 (after hours emergency)
Dover Public Works—Water & Sewer	208-265-4270
Laclede Public Water	208-265-4270
Oden Water Association	208-265-4270
Sandpoint Public Works (Distribution)	208-263-3428
Sourdough Point Water System	208-265-4270
Sunnyside Water	208-265-4270
Cabinet Gorge Dam – Operations Control Room	208-266-1531

Tribal - Kootenai Tribe	
Kootenai Tribe of Idaho Ext 514 Cell	 208-267-3519 208-597-2002
Kootenai Tribe of Idaho 2nd Contact	208-267-7451

Medical Services	
Bonner General Hospital	208-263-1441
Kootenai Health	208-625-5700

Pipeline Company	
Trans Canada Community Relations Specialist	509-533-2869

State	
Idaho State Police	208-884-7000 HQ in Boise 208-209-8730 dispatch
Idaho DOT—Bonner County Area (District 1)	208-772-1200
Idaho Ops Office	208-378-5773
Idaho Department of Fish and Game	208-769-1414 208-799-5010
State Historic Preservation Office	208 334-3861 208-488-7468
Dig Line (ID)	800-342-1585 or 811
Panhandle Health District	208-415-5200
Idaho Department of Water Resources	208-769-1422

Local Government (County, City)	
Bonner County Department of Emergency Management	208-265-8867 208-255-6901
Bonner County Sheriff (including Marine Division)	9-1-1 or 208-263-8417
Bonner County—Commissioners	208-265-1438
Bonner County Public Works	208-255-5681 ext. 2
Bonner County Public Safety Technology Director	208-255-3630 x 1196
Bonner County Road & Bridge Dept.	208-255-5681
Clark Fork, ID, City Hall & Mayor	208-266-1315
Dover, ID	208-265-8339
East Hope, ID	208-264-5877
Kootenai, ID	208-265-2431
Ponderay, ID	208-265-5468
Priest River, ID, Public Works	208-946-9750 208-290-4721
Sandpoint, ID	208-263-3158

Preliminary Draft for Agency Review

Preface

Intended Audience

This geographic response plan (GRP) is intended to satisfy the needs of various users. Response strategies are provided for numerous unique sites that are located in the transportation corridors most likely to have a spill. First responders and emergency dispatch operators will find benefit in identifying the unique features of the spill location. Access descriptions, equipment proximity, and location-specific emergency contact information is provided for each response strategy.

Incident Command System (ICS) support personnel, fire departments, regional response teams, railroads, and state and federal spill response teams will find this GRP useful as a briefing tool to prepare for boom deployment and initial product recovery. Unique features such as booming anchor points, proximity of equipment caches, staging areas, and critical seasonal variations are provided. Local natural and cultural resources that may be affected are identified in this document so that the ICS team can direct protection efforts.

Emergency management personnel will find this document useful for strategic planning purposes. Recommended equipment needed for each location is provided; the equipment needs can be compared to known inventories to ensure readiness of equipment caches. This GRP identifies vulnerabilities in the emergency planning system so that resources can be identified to protect citizens and natural resources.

Content for this document was compiled using material previously published and adapted from the 2005 Lake Pend Oreille Geographic Response Plan (RRT/NWAC, 2005) as well as the BNSF Railroad Draft Pend Oreille Subbasin Geographical Response Plan (Kennedy/Jenks, 2015).

How to Use This Document

The bulk of this plan is contained in Section 4 and associated appendices (Response Strategies and Priorities), which provide information on response strategies and the order they should be implemented, based on potential spill origin points and their proximity to population centers and sensitive resources.

To aid the user in locating a particular strategy, the Lake Pend Oreille region was divided into seven sectors, with each sector having numerous response strategies. Electronic PDF versions of this document have hyperlinks to enable the user to bore down from a regional map, to a sector map, then to a particular response strategy.

Printed versions of this document are arranged by sector and then numerically by highway milepost number. Railroad and river milepost information is also provided in Section 4.

Preliminary Draft for Agency Review

This document recommends strategies and priorities for the order in which strategies should be implemented until a unified command is established. However, these recommendations are not a substitute for proper judgement based on current local factors.

> **Protecting human life is always the highest priority—public evacuation should be considered immediately. Control and containment of a spill becomes the next priority, followed by the appropriate response strategy. The information contained in the response strategy descriptions (Appendix B) is recommended guidance, not prescriptive requirements.**

Vulnerabilities

During development of this GRP, challenges beyond the scope of this plan were identified that need further attention. The purpose of this preface is to highlight those concerns and encourage dialogue followed by action to obtain appropriate funding and implementation of the needed changes. State and local civic leaders and managers of the various emergency response agencies are the parties who may be able to address these vulnerabilities. These challenges are current as of June 2017.

Equipment Vulnerabilities

A comparison of the inventory presented in Section 4.6 with the equipment needs stated in the prioritization tables provided in Section 4.4 reveals that, with the exception of the Clark Fork Delta area, the amount of boom and anchor posts available appears adequate for anticipated needs. A full response in the Clark Fork Delta could require as much as 8,300 feet which would consume the entire boom inventory in all five of the local equipment caches. Recovery devices such as skimmers and vacuum trucks are not staged within the Lake Pend Oreille region and would need to be obtained from outside the area. Additionally, conversations with the various fire departments in the Lake Pend Oreille region indicate the equipment trailers do not have an assigned or designated tow vehicle to move the trailer to the appropriate staging area.

Training Vulnerabilities

Like most emergency response tasks, deployment of a spill response boom is a specialized skill that requires training and field practice. Boom deployment in swift moving water or iced-over conditions adds complexity necessitating additional training. The seven fire districts addressed in this plan are largely staffed by volunteers and a smaller number of professionals; they are trained for a variety of emergency scenarios. However, most of the volunteers have not yet received boom deployment training, thus limiting the response to a hazardous material or oil spill into regional waterways.

Evacuation and Procedural Vulnerabilities

The propensity of oil train accidents to erupt into significant spills and fires, coupled with the proximity of rail lines to high population areas, indicate that the Bonner County communities must be prepared to invoke prompt evacuations or provide shelter-in-place assistance. Facilities that are required to have an evacuation plan, such as schools and nursing homes, should also periodically review their plan and conduct appropriate training.

Preliminary Draft for Agency Review

Bonner County has an Evacuation and Reception Plan that was written prior to the large increase in unit oil train traffic (Bonner County, 2010a). Recent lessons learned from either the Cascadia Rising emergency action drill in 2015 or actual oil train accidents in other areas have not been incorporated. As discussed in Section 4.7, an oil train or hazardous material accident in the Sandpoint area would likely require evacuation of half the city's area. Existing preparations do not appear to adequately address the process for a hasty evacuation. Section 4.7 provided details regarding evacuation considerations.

Geographic Vulnerabilities

The Lake Pend Oreille region is vulnerable to spills of hazardous material from highway vehicles and rail cars primarily because the transportation corridors are in close proximity to the rivers and the lake. Additionally, the rail lines and highways pass through or near many high-value wetlands (see Section 6.1.4) and cross over numerous streams and rivers. Of the 37 accidents reported between 1995 and 2014, 21 were at or near a lake, stream, or wetland.

Most notably, the Clark Fork Delta is vulnerable to any spill downstream of the Cabinet Gorge Dam, which is located only 7.5 miles upstream. At a stream velocity of 4.5 miles per hour (mph), a spill could reach the delta in under 2 hours. The nearest equipment cache is located at the Cabinet Gorge Dam. Although response strategies are presented in this plan, their deployment is complex and resource intense. The response may be ineffective. Section 4.3.1 provides recommendations that may enhance response effectiveness.

Preliminary Draft for Agency Review

Table of Contents

Emergency Contact Sheet i
Preface iii
Intended Audience iii
How to Use This Document iii
Vulnerabilities iv
Equipment Vulnerabilities iv
Training Vulnerabilities iv
Evacuation and Procedural Vulnerabilities iv
Geographic Vulnerabilities v
Table of Contents vi
List of Figures ix
List of Tables ix
List of Appendices x
List of Acronyms x
1 Introduction 13
1.1 Standardized Response Language 13
1.2 Emergency Notification Protocols 13
1.2.1 When Must Notification Take Place? 13
1.2.2 Who Makes Notification? 13
1.2.3 Who Gets Notified? 13
1.2.4 Hierarchy of Emergency Planning Documents 14
1.3 Bonner County Technology Resources 14
1.3.1 Public Safety Technology 15
1.3.2 Geographic Information Systems (GIS) 15
1.3.3 Information Technology (IT) 15
1.3.4 Communications Systems 15
1.3.5 Technology Resources for Incident Managers 15
1.4 Emergency Radio Communications 16
1.5 Cell Phone Communications 17
2 Site Description and GRP Coverage Area 17
2.1 General Description of the Natural Environment of the Intermountain Province (IMP) 18

Preliminary Draft for Agency Review

2.2 Environmental Conditions within the Pend Oreille Subbasin 18
2.3 Pend Oreille Subbasin Sub-Area Site Description and Physical Features..... 19
2.3.1 Upper Pend Oreille Sub-Area Description 21
2.3.2 Upper Pend Oreille Sub-Area Topography/Geomorphology..... 23
2.3.3 Upper Pend Oreille Sub-Area Vegetation 23
2.4 Hydrology..... 24
2.5 Climate..... 24
2.6 Risk Assessment..... 26
2.6.1 Oil and Hazardous Materials Transit in Bonner County..... 26
2.6.2 Roadway..... 28
2.6.3 Railroads..... 29
3 Response Options and Considerations..... 34
4 Response Strategies and Priorities 37
4.1 On-Site Considerations 37
4.1.1 Before Deploying a GRP Strategy (Questions to Ask)..... 37
4.1.2 During Strategy Implementation (Things to Remember)..... 38
4.1.3 After Strategy Implementation (Things to Understand)..... 38
4.2 Hydrologic Considerations..... 38
4.2.1 Hydrographs for Rail-Adjacent GRP Waterbodies 38
4.2.2 Stream Velocity Ranges..... 40
4.2.3 River Hazards..... 41
4.2.4 Current Weather Conditions..... 41
4.3 Regional Area Maps..... 42
4.3.1 Clark Fork Delta..... 42
4.3.2 Denton Slough..... 44
4.4 Priority Tables..... 49
4.5 Water Users 62
4.6 Equipment Cache..... 63
4.7 Evacuation Considerations 64
4.8 Boat Ramps and Staging Areas..... 65
4.9 Natural Gas Pipelines..... 66

Preliminary Draft for Agency Review

4.10 Other Geographic Response Plans–Rosetta Stone 67
5 Shoreline Countermeasures 67
5.1 Pend Oreille Shoreline Types 68
6 Resources at Risk 81
6.1 Natural Resources 81
6.1.1 Fish Habitat Descriptions 81
6.1.2 Fish 84
6.1.3 Avian and Terrestrial Species 86
6.1.4 Wildlife Management and Protected Habitat Areas 90
6.1.5 Wetlands 94
6.1.6 Rathdrum Prairie Aquifer 97
6.2 Cultural/Historical Resources 99
6.2.1 Procedures for the Finding of Human Skeletal Remains 100
6.2.2 Procedures for the Discovery of Cultural Resources 100
6.3 Economic Resources 101
6.3.1 Cabinet Gorge Dam and Reservoir 102
6.3.2 Cabinet Gorge Fish Hatchery/Avista Utilities Fish Rearing Facility 103
6.3.3 Lake Pend Oreille 103
6.3.4 Sandpoint Public Water System 103
6.3.5 Sandpoint City Beach 104
6.3.6 City of Dover Public Water System 104
6.3.7 City of Laclede Public Water System 104
6.3.8 Priest River Public Water Supply 104
6.3.9 Waterlife Discovery Center 105
6.3.10 Albeni Falls Dam 105
6.3.11 Seasonal/Private/Non-Municipal Water Systems 105
6.3.12 Marinas 105
7 References 106
8 Appendices 111

Preliminary Draft for Agency Review

List of Figures

Figure 1-1: Bonner County Emergency Radio Repeaters Locations 17
Figure 2-1: Lake Pend Oreille Subbasin: Watershed-Based Sub-Areas 20
Figure 2-2: Lake Pend Oreille Geographical Response Plan Coverage Area 21
Figure 2-3: Sandpoint, Idaho, Wind Directions over the Entire Year 26
Figure 2-4: Hazardous Material by Rail in Bonner County 27
Figure 2-5: Highway Accident Safety Corridor Map for Bonner County 29
Figure 2-6: Bonner County Railroads 31
Figure 2-7: Bonner County Train Accidents (1995–2014) 32
Figure 2-8: Sandpoint, Idaho, Train Accidents (1995–2014) 33
Figure 4-1: Lake Pend Oreille Elevation (Hope Gage)—Probability Chart 40
Figure 4-2: SR200 55.3 Mouth of Clark Fork Booming Options 46
Figure 4-3: SR200 55.3 Mouth of Clark Fork Booming Options: Drift Yard Area 47
Figure 4-4: SR200 50.4 Denton Slough Booming Options 48
Figure 4-5: Hazard Zone A 51
Figure 4-6: Hazard Zones B through G 52
Figure 4-7: Public Water Systems Drawing from Lake Pend Oreille and the Pend Oreille River 63
Figure 4-8: Pipeline Crossings with Highway or Railroad 67
Figure 6-1: Pend Oreille Sub-Area GRP Bull Trout Critical Habitat 83
Figure 6-2: Fish and Game Managed Lands, Bonner County 91
Figure 6-3: Clark Fork Delta Restoration Project Areas 94
Figure 6-4: Priority Wetland Areas in the Lake Pend Oreille Region 96
Figure 6-5: Rathdrum Prairie Aquifer 99

List of Tables

Table 1-1: Bonner County Radio Repeater Locations 16
Table 2-1: Oil and Hazardous Material Rail Shipments in Bonner County (More than 300,000 Total Loads Per Year) 26
Table 2-2: Hazardous Materials by Highway in Bonner County 28
Table 2-3: Bonner County Rail Accidents, 1995–2014 30
Table 4-1: Water Speed Drift Measurement Data and Boom Angle Considerations 41
Table 4-2: Current Weather Condition Resources 42
Table 4-3: Denton Slough Supplemental Information 49
Table 4-4: Hazard Prioritization Tables 53
Table 4-5: Public Water Systems Drawing Surface Water from Lake Pend Oreille or Pend Oreille River 62
Table 4-6: Available Work Boats for Boom Deployment 64
Table 4-7: Natural Gas Pipeline Crossings with Transportation Routes 66
Table 5-1: Shoreline Types and Codes 69
Table 6-1: Federally Listed ESA Fish Species within the GRP Coverage Area 84

Preliminary Draft for Agency Review

Table 6-2: Federally Listed ESA Avian and Terrestrial Species within the GRP Coverage Area 86
Table 6-3: Significant Wetlands in the Lake Pend Oreille Region 97

List of Appendices

Appendix A Responding to Releases
Appendix B Strategy Reports
Appendix C Oil Spill Scenario Travel Time Analysis
Appendix D Summary of Equipment Trailer Contents
Appendix E High-Occupancy Facilities
Appendix F Boat Ramps and Marinas
Appendix G Other Geographic Response Plans–Rosetta Stone

List of Acronyms

BLM	Bureau of Land Management
BPA	Bonneville Power Administration
cfs	cubic foot per second
BNSF	Burlington Northern Santa Fe railroad
CERCLA	Comprehensive Emergency Response Compensation & Liability Act
DEQ	Idaho Department of Environmental Quality
EPA	United States Environmental Protection Agency
EPCRA	Emergency Planning and Community Right to Know Act
ESA	Endangered Species Act
FERC	Federal Energy Regulatory Commission
ft	foot
GIS	geographic information system
GRP	geographic response plan

Preliminary Draft for Agency Review

ICS	Incident Command System
IDFG	Idaho Fish and Game
IGBC	Interagency Grizzly Bear Committee
IMP	Intermountain Province
IOEM	Idaho Office of Emergency Management
IPUC	Idaho Public Utilities Commission
IT	information technology
ITD	Idaho Department of Transportation
kg	kilogram
LMZ	Lynx Management Zones
mph	mile per hour
msl	mean sea level
MRL	Montana Rail Link railroad
NOS	not otherwise specified (a proper shipping name designator)
NPCC	Northwest Power and Conservation Council
NRHP	National Register of Historic Places
NWACP	Northwest Area Contingency Plan
RPA	Rathdrum Prairie Aquifer
SCAT	Shoreline Cleanup Assessment Techniques
SCBA	self-contained breathing apparatus
SHPO	State Historic Preservation Office
SR	State Route
UP	Union Pacific Railroad

Preliminary Draft for Agency Review

USCG0015993/27

USACE	United States Army Corps of Engineers
USFS	United States Forest Service
USFWS	United States Fish and Wildlife Service
USGS	United States Geological Survey
WMA	Wildlife Management Area

Preliminary Draft for Agency Review

1 Introduction

This geographic response plan (GRP) is an emergency planning document to guide individuals and organizations responding to hazardous material and oil spills during the initial phase of the incident. The plan suggests and prioritizes response strategies based upon the proximity of a spill to population centers and sensitive natural, cultural, and economic resources.

This GRP addresses the Lake Pend Oreille region in Bonner County, Idaho.

1.1 Standardized Response Language

To avoid confusion in response terminology, this plan uses standard National Interagency Incident Management System, Incident Command System (ICS) terminology. The glossary provided in Section 1000 of the Northwest Area Contingency Plan (NWACP) should be used when seeking the meaning of terms used in this plan.

1.2 Emergency Notification Protocols

1.2.1 When Must Notification Take Place?

In Idaho, reportable spills are generally defined as any of the following:

- Spills of hazardous materials or oil, that enter, or threaten to enter, surface water or groundwater waterbodies of the state
- Discharges exceeding Comprehensive Environmental Response, Compensation, and Liability Act reportable quantities

1.2.2 Who Makes Notification?

Anyone can make notification to activate an emergency response. Persons causing a hazardous material spill **must** notify emergency response (9-1-1) if they cannot immediately contain and control the spill. All hazardous materials incidents must be reported by the local incident commander to Idaho State Communications Center, commonly known as "StateComm," even if the local jurisdiction requires no outside assistance. If spill exceeds reportable quantity, then report to the National Response Center (1-800-424-8802).

1.2.3 Who Gets Notified?

The initial notification of hazardous materials incidents should be made through the 9-1-1 emergency services system. All hazardous materials incidents will be managed using the ICS. Additional details on hazardous material spill reporting can be found in Appendix A.

The Idaho Hazardous Materials/Weapons of Mass Destruction Incident Command and Response Support Plan is the primary mechanism for initial response to hazmat incidents in Idaho and is part of the Idaho Emergency Operations Plan (IOEM, 2013).

Preliminary Draft for Agency Review

All hazardous materials incidents should be reported by the local incident commander to StateComm even if the local jurisdiction requires no outside assistance. Doing so enables the Idaho Office of Emergency Management (IOEM), Idaho Department of Environmental Quality (DEQ), Idaho State Police, Idaho Public Utilities Commission, Idaho Transportation Department (ITD), U.S. Environmental Protection Agency (EPA), Federal Bureau of Investigation, and other state/federal agencies to perform their regulatory responsibilities concerning public health and responsible parties, including the owner, user, site operator, shipping agent, carrier, or others in whose custody the material has been placed. Reporting hazardous material incidents to StateComm also fulfills state reporting requirements as established by the Emergency Planning and Community Right-to-Know Act and the Idaho Hazardous Substance Emergency Response Act (IOEM, 2013).

A comprehensive list of agency and emergency contacts is provided at the beginning of this document.

1.2.4 Hierarchy of Emergency Planning Documents

This GRP supplements other emergency planning documents.

- The Idaho Emergency Operations Plan (IOEM, 2015) is an all-discipline, all-hazard plan that delineates lines of authority and responsibilities of emergency action agencies.
- The Northwest Area Contingency Plan (RRT/NWAC, 2017) is a regional plan that is required by the federal national contingency plan. The purpose of this plan is to provide a playbook for oil and hazmat responses that involve state and federal agencies. It covers Washington, Oregon, and Idaho.
- The Idaho Hazardous Materials/Weapons of Mass Destruction Incident Command and Response Support Plan (IOEM, 2013) supports the two plans above and is the primary mechanism for initial response to hazardous materials incidents in Idaho. This plan is also referred to as the "Yellow Book."
- The Bonner County Emergency Operations Plan (Bonner County, 2009) identifies the roles, responsibilities, and direction for Bonner County agencies and some volunteer organizations in responding to emergencies or disasters.

This GRP is a guidance document that provides response tactics and local information to inform and speed the initial response to a spill. It is a technical supplement to the Northwest Area Contingency Plan. This GRP is intended to be an informational resource to first responders and support personnel arriving from outside the area. It can also be used as a training tool or a resource for civic leaders and local emergency management personnel to assess spill preparedness.

1.3 Bonner County Technology Resources

Bonner County has a variety of technology-based systems that can significantly enhance communications and strategy development during an emergency response. Requests for assistance from the Bonner County Technology Department should be made through the department director. Contact information is provided in the contact sheet at the front of this document. The Technology Department manages four primary areas:

Preliminary Draft for Agency Review

- Public safety technology
- Geographic information systems
- Information technology
- Communication systems

1.3.1 Public Safety Technology

The Bonner County Technology Department manages the technical resources of the Sheriff's Office and the 9-1-1 Dispatch Center, including the software, hardware, network, and communications network assets.

1.3.2 Geographic Information Systems (GIS)

The GIS Team is located in the Bonner County Administrative Building on Highway 2. This team manages the geospatial data of the county and surrounding areas. The GIS Team integrates data with spatial information to enable the county's data to be visualized, analyzed, and printed spatially. The GIS Team provides support to all programs of the county that require spatial applications. The GIS Team also provides the public with geospatial data in an interactive mapping application located at http://maps.bonnercounty.us/apps/public/.

1.3.3 Information Technology (IT)

The IT Team manages the network and computer assets of the county. The IT Team supports all the county users of technology with technical support and administers and operates the technology help desk system. The IT Team is responsible for the back office assets of the county that include networks and internet access, servers, routers, switches, and network storage and manages the security, access, and credentials of authorized network users.

1.3.4 Communications Systems

The team manages the communication assets of the county including base/mobile/portable radio systems, repeater sites, microwave network, and telephones.

1.3.5 Technology Resources for Incident Managers

- The Bonner County Map Portal at http://maps.bonnercounty.us provides authoritative road, parcel, and address data for incident command. The map at http://maps.bonnercounty.us/apps/public/ can show all the many GIS layers in the county and allows the user to annotate a map with text and geometric shapes.
- The Bonner County Mobile Map at http://maps.bonnercounty.us/apps/mobile/ provides a basic mapping system for a smart phone or tablet that has the ability to route between two addresses, find an address, and show the location of the user on a map. It would be a key tool in an evacuation scenario because a user can see all the address points on the map relative to the user's location.
- **Reverse 9-1-1:** The 9-1-1 Dispatch Center has access to the Everbridge Emergency Notification System that can notify the public of an emergency within any polygon drawn on the map by the 9-1-1 dispatcher. Everbridge can send an emergency notification to any landline as well as cell

Preliminary Draft for Agency Review

phones within a given area through a Federal Emergency Management Agency program called Integrated Public Alert and Warning System.

- The web site at https://bonnercom.org/ describes the county's public safety communication systems. For registered users, there is a frequency list and frequency technical details for all agencies operating in Bonner County including all the Bonner County public safety frequencies for all the county's repeater sites. In an emergency, request a current list from technology@bonnercountyid.gov.
- The 9-1-1 Dispatch Center has a portable or towable 65 kilowatt Kohler 70REZGT propane three-phased generator and a portable public safety radio repeater system that can be deployed anywhere in the county in an emergency. A request for use of these assets should be made through the Sheriff's Department.

1.4 Emergency Radio Communications

Radio communication for emergency responders is provided by Bonner County through a series of repeaters. The repeater locations are listed in Table 1-1 and shown in Figure 1-1 below. Frequencies and other technical details for those repeaters can be found at https://www.bonnercom.org/Current_Sites.

Emergency responders arriving from outside Bonner County who need access to this radio system should contact the Bonner County Public Safety Technology Director or the 9-1-1 Dispatch Center for specific instructions on how to link into this system.

Table 1-1: Bonner County Radio Repeater Locations

Site Name	Longitude	Latitude
Baldy Mountain	-116.6941	48.33158
Bonner County Courthouse	-116.5472	48.27220
Bonner County Jail	-116.5586	48.30890
Clark Fork	-116.1919	48.13714
Hoodoo Mountain	-116.9536	48.08053
Little Blacktail	-116.5544	48.09406
Priest River Junior High	-116.9175	48.18108
Samuels Transcanada	-116.4871	48.43547
Sandpoint City Hall	-116.5549	48.27186
Schweitzer Mountain	-116.6446	48.36731
Sundance	-116.7516	48.49075

Preliminary Draft for Agency Review

Figure 1-1: Bonner County Emergency Radio Repeaters Locations

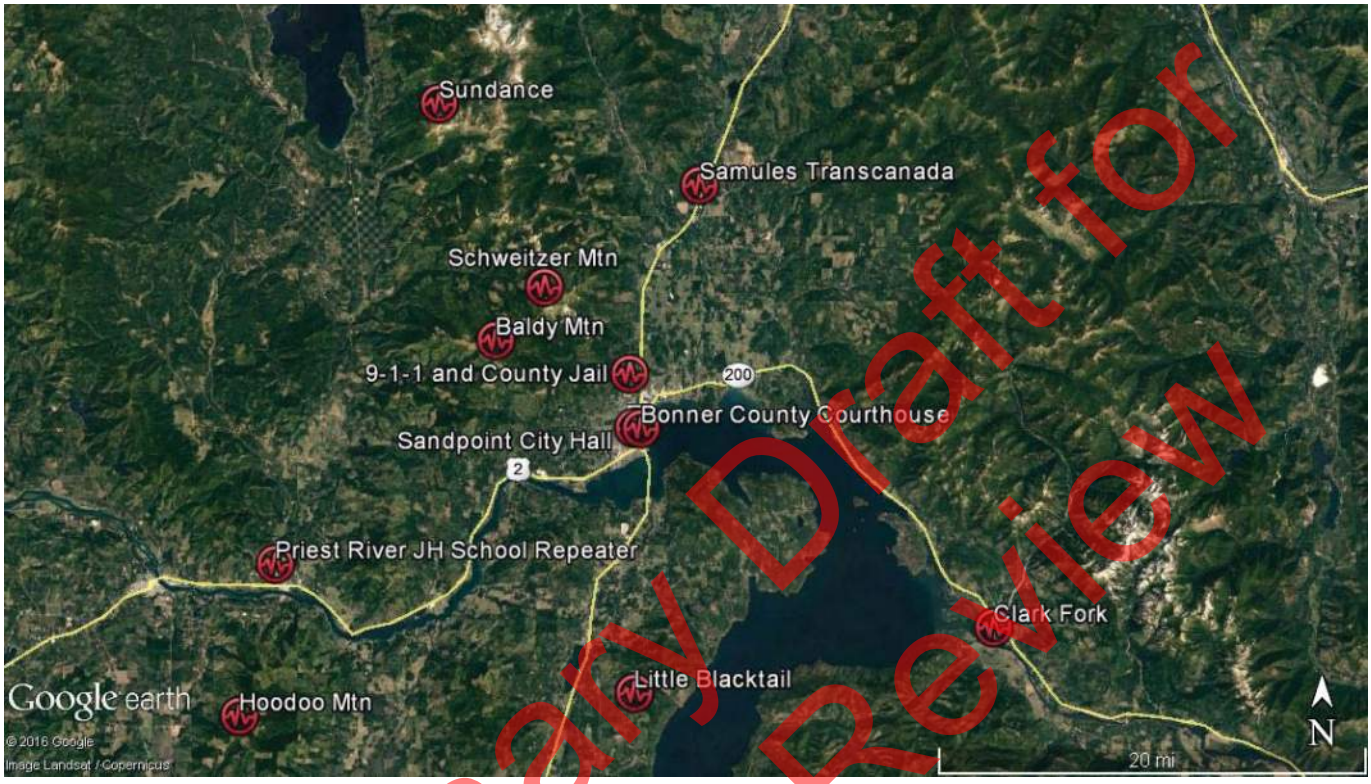

1.5 Cell Phone Communications

Cellular telephone coverage along the main transportation corridors in Bonner County is quite complete, with the exception of the area east of Clark Fork to the Cabinet Gorge Dam at the Montana state line and beyond. A current map of the cellular phone coverage is available from the Idaho Department of Commerce at http://www.gemstateprospector.com/mapping.html.

2 Site Description and GRP Coverage Area

This section contains topographic descriptions, physical river features, river hydrology, climate, and resources in the GRP coverage area. The intended users of this section are ICS support personnel who are arriving from outside of the North Idaho area and need to quickly learn the major features of the area. Due to the diversity of landforms, waterbodies, and ecosystems throughout the GRP coverage area—and the modification of each by climate, aspect, hydrology, geomorphology, etc.—this section should not be considered comprehensive or exhaustive. Section 2 is meant to give an overview of the GRP coverage area and readily identifiable sub-areas and provide adequate detail for response managers to make informed emergency response management decisions, in consultation with other stakeholders in the GRP coverage area.

Preliminary Draft for Agency Review

Section 2 relies heavily on information from the Northwest Power and Conservation Council (NPCC) Intermountain Province Subbasin Plan and Pend Oreille Subbasin Plan (NPCC, 2005a-b).

2.1 General Description of the Natural Environment of the Intermountain Province (IMP)

The IMP, which contains the Pend Oreille Subbasin relevant to the GRP (and five others outside the GRP coverage area), is characterized by a diverse landscape ranging from 1,000 feet (ft) above mean sea level (msl) near the tailwaters of Chief Joseph Dam to 7,690 ft above msl at Illinois Peak in the headwaters of the St. Joe River. The northern and eastern boundaries lie within the Northern Rocky Mountains (NPCC, 2005a). These areas are generally characterized as alpine and subalpine forests with a decaying granitic geology (Alt and Hyndman, 1994). In the eastern portion of the province, in both the Coeur d' Alene and Pend Oreille Subbasins, the Precambrian Belt Supergroup is the predominant bedrock (NPCC, 2005a). Belt rocks are a thick layer of sedimentary sandstones and mudstones, approximately 1 billion years old (Alt, 2001). Much of the southwestern portion of the IMP is within an area known as the Palouse Hills. The Palouse Hills are a softly rounded landscape with rich, fertile, silty soils (NPCC, 2005a). Set within this farmland are areas known as scablands, with outcrops of black basalt, broad expanses of raw gravel, and dry stream channels (coulees) (Alt, 2001). This landscape was carved during the most recent ice age. About 15,000 years ago, the southern glacial fringe encroached upon the mountain valleys of northern Washington and Idaho. Glaciers dammed the Clark Fork River creating Glacial Lake Missoula. The dam broke and the lake drained catastrophically causing a torrential flood (NPCC, 2005a). This process happened several dozen times, resulting in the landscape seen today (Alt, 2001).

2.2 Environmental Conditions within the Pend Oreille Subbasin

Euro-American settlement of the Clark Fork River valley and Lake Pend Oreille was accompanied by forest clearing, agricultural development, logging, introduction of nonnative species, mining, railroad construction, hydroelectric projects, and general urbanization (Entz and Maroney, 2001). Natural and human-made fires, past timber harvest activities, and dams have also heavily influenced the landscape in the Pend Oreille Subbasin (NPCC, 2005b).

In the early and mid-1900s, hydroelectric facilities within the Pend Oreille Subbasin and upstream in the Clark Fork and Flathead drainages were present or under construction (NPCC, 2005b). Facilities in Idaho and Montana—such as the Albeni Falls Dam (inside the GRP coverage area) and Hungry Horse, Kerr, and Noxon Rapids Dams (outside the GRP coverage area)—were built for hydropower, flood protection, fisheries, and recreation (U.S. Senate, 1949).

Large-scale habitat degradation occurred due to operation of Cabinet Gorge, Noxon Rapids, and Albeni Falls Dams. Upstream dams impeded sediment transport to the Clark Fork River Delta, prohibiting development of delta landforms and the protective lakeside beach. Widely fluctuating flows associated with dam operations continued to erode delta shorelines that would naturally be protected by armored streambeds during low fall/winter flows. These and other impacts have resulted in the loss of roughly

Preliminary Draft for Agency Review

50% of functional delta wildlife habitat and ongoing losses estimated at 7.9–11.9 acres per year (NPCC, 2005b).

2.3 Pend Oreille Subbasin Sub-Area Site Description and Physical Features

The Pend Oreille Subbasin is located in northern Idaho and northeastern Washington and represents the northeastern-most corner of the IMP. As shown in Figure 2-1, the Pend Oreille Subbasin is comprised of three sub-areas: the Lower Pend Oreille Sub-Area, the Priest Lake Sub-Area, and the Upper Lake Pend Oreille Sub-Area. This GRP addresses only the Upper Lake Pend Oreille Sub-Area, which is shown in greater detail in Figure 2-2. The Upper Pend Oreille Sub-Area encompasses the Cabinet Gorge Dam and all of Lake Pend Oreille and its tributaries located on the Clark Fork River down to Albeni Falls Dam, which is located on the Pend Oreille River.

The Pend Oreille River is the largest river in the subbasin and flows west out of Lake Pend Oreille and north across the Idaho panhandle and the northeastern corner of Washington before draining into the Columbia River in British Columbia, Canada.

Much of the northern and eastern parts of the Pend Oreille River watershed sub-area are public lands comprising mountainous or hilly terrain deeply cut by streams and mostly forested. The broad, fertile valleys and river bottoms, predominately in the western part of the watershed, are mostly in private ownership. Near the lake and on its shore, private lands account for more than half of the ownership. The remaining land is managed by the U.S. Forest Service (USFS) (25%), the state (7%), and the Bureau of Land Management (BLM) (1.6%). Major land uses in the sub-area include agricultural and timber production and recreational development. Only 12% of the drainage is open water.

Lake Pend Oreille's elevation is regulated by Albeni Falls Dam, operated by the U.S. Army Corps of Engineers (USACE). Three major tributaries enter Lake Pend Oreille: the Clark Fork River enters the lake approximately 9.3 miles west of the Idaho-Montana border, the Pack River enters the northeastern portion of the lake, and the Priest River enters the Pend Oreille River about 5 miles upstream of Albeni Falls Dam (this portion of the river is backed up by the dam). Lake Pend Oreille is the fifth-largest natural freshwater lake in the United States.

Preliminary Draft for Agency Review

Figure 2-1: Lake Pend Oreille Subbasin: Watershed-Based Sub-Areas[1]

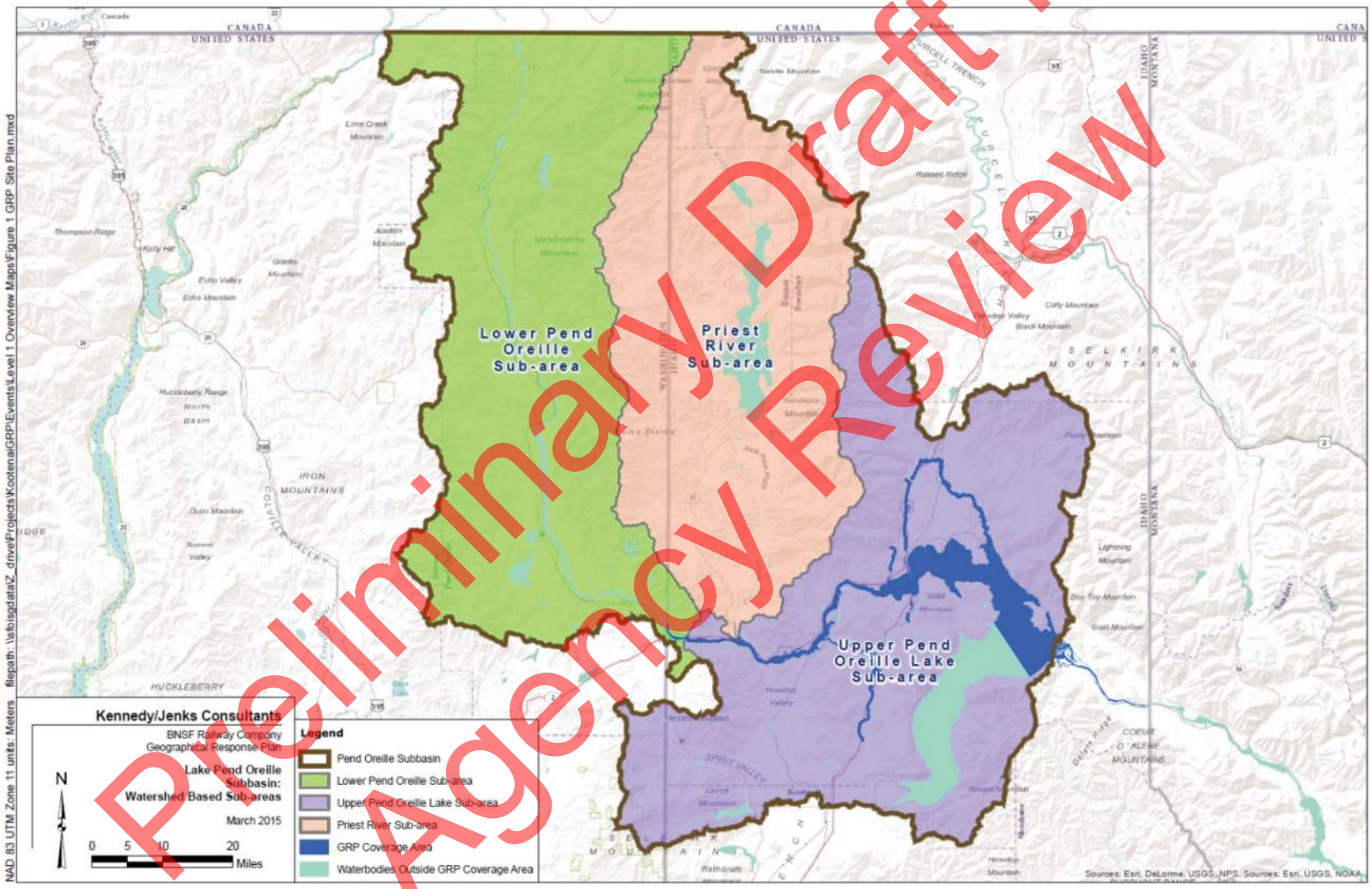

Preliminary Draft for Agency Review

[1] Figure courtesy of BNSF railroad.

Figure 2-2: Lake Pend Oreille Geographical Response Plan Coverage Area

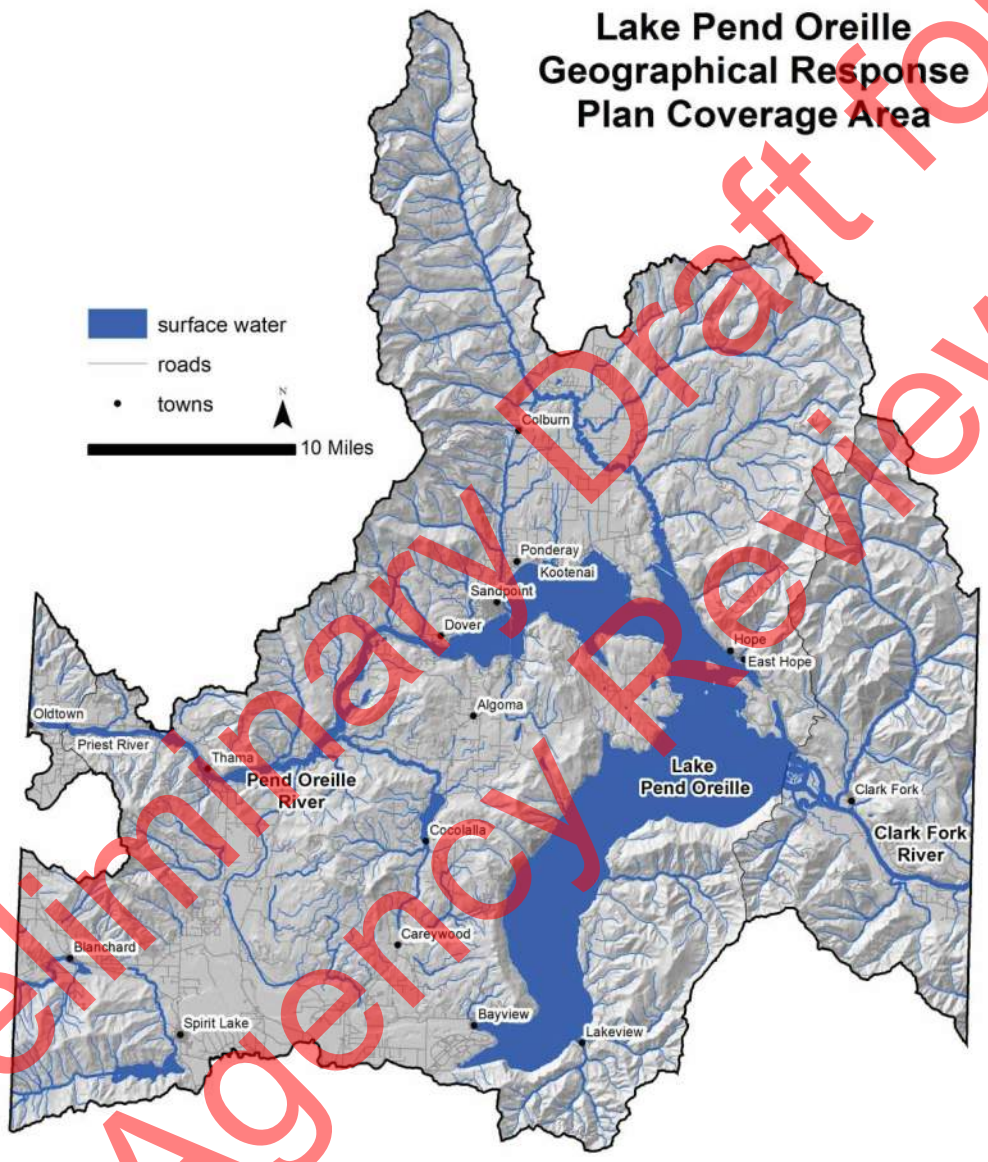

Preliminary Draft for Agency Review

2.3.1 Upper Pend Oreille Sub-Area Description

The Upper Pend Oreille Sub-Area is sparsely settled; Bonner County has a population of about 42,500 people. Sandpoint, the county's largest city with about 7,800 residents, and the surrounding cities and rural areas along the northern shore of the lake comprise about half the county's population (U.S.

Census, 2017). In summer, an additional 5,000 people call the northern shore their home (RRT/NWAC, 2005).

The Upper Pend Oreille Sub-area drainage (approximately 1,972 square miles) encompasses all of Lake Pend Oreille and its tributaries, including 9.3 miles of the Clark Fork River upstream to Cabinet Gorge Dam, and the Pend Oreille River and its tributaries down to the lake's control point, Albeni Falls Dam. Lake Pend Oreille is located in the Panhandle region of northern Idaho and lies primarily within Bonner County. Lake elevation is regulated by Albeni Falls Dam. Congressional authorization of Albeni Falls Dam (by the 81st Congress, 1st Session, Senate Document No. 9, February 7, 1949) requires that the Albeni Falls Dam not contribute to downstream flooding. Inflow comes through Cabinet Gorge and Noxon Rapids Dams, which are "power peaking" facilities owned and operated by Avista Utilities. During low flow (non-runoff) season, Avista operates these dams for hourly peaking, but these projects do not affect lake levels (NPCC, 2005b). The USACE operates Albeni Falls Dam, which is located on the Pend Oreille River near the Washington border.

The Pend Oreille River, prior to the construction of Albeni Falls Dam in 1952, provided free-flowing riverine habitat that supported a cold water fishery. Prior to construction of Albeni Falls and Cabinet Gorge Dams, the lower Clark Fork River supported important fisheries for migrating kokanee salmon, mountain whitefish, and bull trout. Westslope cutthroat trout were also present in the river and provided a fishery for fluvial and adfluvial fish (NPCC, 2005b). Today, the upper Pend Oreille River supports a limited warm water fishery, and the presence of salmonids is very low (Bennett and DuPont, 1993). Bennett and DuPont (1993) conducted a 2-year survey (1991 to 1992) and found salmonids (native and nonnative species) accounted for only 1.9% of all species collected in 1991 and 0.6% in 1992. Management direction is to work with USACE on lake level management to improve conditions for fish species (NPCC, 2005b).

Fish habitat in tributary streams within the Upper Pend Oreille Sub-Area has been impaired through delivery of excess bedload sediment, fine sediment delivery, loss of large woody debris and riparian forest habitat, channelization, and isolation of streams from their floodplains (PBTTAT, 1998). Human-made fish migration barriers and water diversions are scattered around the subbasin, resulting in loss of access to spawning and rearing habitat and loss of flow and migrating fish to diversions. During the summer and fall months, the lower 3.4 miles of the Clark Fork River (the headwaters of Lake Pend Oreille) are flooded by backwater from Albeni Falls Dam, creating an unproductive environment for native and introduced salmonids (NPCC, 2005b). Riverine habitat has been further compromised by Cabinet Gorge Dam and its operations, resulting in blocked fish passage, rapidly fluctuating river flows, and during high water years (such as 1997), total dissolved gas levels exceeding 150% saturation (Weitkamp et al., 2003).

Cabinet Gorge Dam presents a complete migration block to fish migrating upstream from the Clark Fork River. Steps are underway to restore fish passage as part of the Federal Energy Regulatory Commission (FERC) re-licensing process (NPCC, 2005b).

Preliminary Draft for Agency Review

2.3.2 Upper Pend Oreille Sub-Area Topography/Geomorphology

The Selkirk Mountains to the west, the Cabinet Mountains to the north, and the Bitterroot Mountains to the east shape the Upper Pend Oreille Sub-Area. During the ancient Precambrian period over 600 million years ago, shallow seas inundated northern Idaho. Sediments of clay, silt, and sand settled out of brackish waters as seas retreated, subsequently metamorphosed, and began to fold and fault. In the last few million years, the sub-area was substantially altered by major glacial events in the late Pleistocene period. Glacial advances resulted in highly dissected watersheds with high stream density, shallow soils, and subsoil compaction of glacial tills. Groundwater seeps and springs are prevalent in tributaries draining the Cabinet and Bitterroot Mountains to the north and east of Lake Pend Oreille, reflecting the more recent geology. The parent rocks of soils developed from the Precambrian Belt Supergroup weather to a preponderance of coarse fragments (60 to 70%), fine silts (20% plus), and a small amount of gravel and sand. When these soils are eroded by natural or human-caused agents into high gradient mountain streams (Rosgen B or steeper; Rosgen, 1994), the fine silts are transported rapidly downstream out of the system while the coarse fragments remain as bedload. This bedload is transported locally within the channel during channel-forming events (2-year discharge events). If erosion has been accelerated, the excess bedload fills pools and triggers additional bank cutting (NPCC, 2005b).

Generally, streams on the northern and eastern sides of Lake Pend Oreille tend to be more productive and have much less fine sediment than streams draining the granitic soils of the Selkirk Mountains. Streams flowing from the Cabinet and Bitterroot Mountains are more likely to have bedload as a limiting habitat factor, whereas streams flowing from the granitic watersheds of the Selkirk Mountains may have fine sediment limiting habitat condition. Migratory fish are precluded from several tributaries, or portions of tributaries, due to natural waterfalls found throughout the basin (NPCC, 2005b).

2.3.3 Upper Pend Oreille Sub-Area Vegetation

Historical vegetation patterns in the Upper Pend Oreille Sub-Area were largely influenced by wildfire. Uplands were more typically dominated by seral species in various stages of succession, with age and composition dependent largely on fire cycles, elevation, slope, and aspect (NPCC, 2005b).
Low elevation riparian zones near tributary mouths include areas with and without tree canopy cover. Along stream corridors where tree overstory does not exist or is thin, vegetation includes shrubs and small trees such as thin-leaf alder, *Alnus sinuate;* willows, *Salix* spp.; snowberry, *Symphoricarpos albus*; mountain maple, *Acer glabrum*; red-osier dogwood, *Cornus stolonifera*; blue elderberry, *Sambucus cerulea*; and black hawthorn, *Crataegus douglasii.* Where tree canopy is present, tree species include black cottonwood, *Populus trichocarpa*; water birch, *Betula occidentalis*; quaking aspen, *Populus tremuloides*; and a mix of conifer species including western red cedar, *Thuja plicates*; western hemlock, *Tsuga heterophylla;* Douglas-fir, *Psuedotsuga menziesi*; grand fir, *Abies grandis*; and western white pine, *Pinus monticola* (NPCC, 2005b).

Conifer forests in the sub-area consist of mixed stands, typified by stands of western red cedar/western hemlock; stands of co-dominant Douglas-fir and ponderosa pine, *Pinus ponderosa;* and stands of Douglas-fir; western larch, *Larix occidentalis;* lodgepole pine, *Pinus contorta;* and western white pine (NPCC, 2005b). Dense stands of Douglas-fir, larch, and lodgepole are characteristic of slopes with

Preliminary Draft for Agency Review

northern and eastern aspects. Relatively open stands of Douglas-fir and ponderosa pine are typical on the warmer, dryer southern and western aspects. Representative species of upland shrubs include western serviceberry, *Amelachier alnifolia*; mountain maple; snowberry; mountain balm, *Ceanothus velutinus*; mallow ninebark, *Physocarpus malvaceus*; huckleberry, *Vaccinium* spp.; and others (NPCC, 2005b).

2.4 Hydrology

Lake Pend Oreille is the largest and deepest natural lake in Idaho, covering approximately 83,264 acres prior to impoundment by Albeni Falls Dam in 1952. At full pool, the lake now covers 94,794 acres (USFWS, 1953; Hoelscher, 1993). The lake has more than 175 miles of shoreline and has a mean and maximum depth of 538 ft and 1,151 ft, respectively (Rieman and Falter, 1976). An estimated 95% of the lake's volume is held in the large, southern-most basin, a glacially influenced portion of the Purcell Trench (Savage, 1965) with a mean depth of 715 ft.

The USACE regulates the lake's elevation via operations at Albeni Falls Dam within about 11 ft, between a winter low of 2,051.5 ft above msl and a summer high of 2,062.5 ft above msl. Winter drawdown generally begins after Labor Day. Minimum pool is normally reached between November 15 and December 1, with a target date of November 15 to facilitate kokanee salmon spawning (Fredericks et al., 1995).

The Clark Fork River is the largest tributary to Lake Pend Oreille and drains a watershed of approximately 22,905 square miles (Lee and Lunetta, 1990). The river contributes approximately 92% of the annual inflow to the lake (Frenzel, 1991) and most of the annual suspended sediment load. Tributaries to the Clark Fork below Cabinet Gorge Dam include Lightning, Twin, Mosquito, and Johnson Creeks. Pack River is the second-largest tributary to the lake and is fed by a number of significant tributary watersheds, including Grouse Creek.

Melting snow produces peak flows in the Clark Fork River typically between 30 and 60 thousand cubic feet per second (cfs) in May or June. Mid-winter rain-on-snow events can result in rapid snowmelt, and in some years the peak flow from tributary watersheds occurs during these events in winter (i.e., the non-runoff season). Lightning Creek and other tributaries draining the Cabinet and Bitterroot Mountains are particularly susceptible to rain-on-snow events due to high precipitation, their location relative to the lake, prevailing winds, and the tendency for warm winter storms to pick up moisture from the lake. The Pend Oreille River is the only surface outflow from Lake Pend Oreille. The reservoir narrows to what was once the natural river channel but is now the forebay of Albeni Falls Dam. Velocities in the channel can be river-like during high flow conditions. The constricted sections of the lake flow for about 27 miles from the lake's northwest corner near Sandpoint into Washington.

2.5 Climate

Continental and marine weather patterns influence climatic conditions in the Upper Pend Oreille Sub-Area. Winter storms pass over the area from November through March causing a noticeably wet climate. Mid-winter storms periodically bring warm air masses resulting in rain-on-snow events at middle elevations ranging between 2,500 and 4,500 ft above msl. Summer storms generally pass farther

Preliminary Draft for Agency Review

north, resulting in relatively dry seasonal conditions. Winds typically prevail from the southwest across Lake Pend Oreille.

Average monthly temperatures in the area range from 27 to 65°F. Precipitation varies widely throughout the year. November is the wettest month with a monthly average of 3.5 inches, while August is the driest with a monthly average of 0.7 inches (Weatherspark, 2017). Precipitation falls mainly as snow in the winter months, averaging 88 inches per year. The main body of Lake Pend Oreille seldom freezes in winter; however, shallow areas in the northern end of the lake form an ice cover some years.

The climate in Bonner County is generally sub-humid characterized by warm, dry summers and cold, wet winters. The mountains have cooler summers and colder winters than areas in the valley (Bonner County, 2010b).

Annual precipitation in Bonner County ranges from 20 to 60 inches and the most precipitation is received in the mountains in the northwestern part of the county. The southern part of the county receives the least. The driest months for Bonner County are normally July, August, and September and correspond to the height of the wildland fire season for northern Idaho. Some rainfall normally occurs during these months, but extended dry periods can occur. Precipitation occurs year-round in the mountains, with deep snowpack accumulating during winter months (Bonner County, 2010b).

Chinook winds, which blow downslope and are warm and dry, often melt and evaporate snow. Summers in Bonner County are warm to hot in the valleys, with much cooler temperatures in the mountains. In the winter, the average temperature is 20 F and the average daily minimum temperate is 23 F. Average temperatures in the summer are 63 F and the average daily maximum temperature is 78 F (Bonner County, 2010b).

Over the course of the year, typical wind speeds vary from 0 to 13 miles per hour (mph) (calm to moderate breeze), rarely exceeding 17 mph (moderate breeze). The highest average wind speed of 5 mph (light breeze) occurs around mid-April, at which time the average daily maximum wind speed is 13 mph (moderate breeze). The lowest average wind speed of 3 mph (light breeze) occurs around mid- to late October, at which time the average daily maximum wind speed is 9 mph (gentle breeze) (Weatherspark, 2017).

The wind in Sandpoint is most often out of the southwest (18% of the time), northeast (14% of the time), and south (12% of the time) (Figure 2-3). The wind is least often out of the northwest (1% of the time) and southeast (4% of the time) (Weatherspark, 2017).

Preliminary Draft for Agency Review

Figure 2-3: Sandpoint, Idaho, Wind Directions over the Entire Year

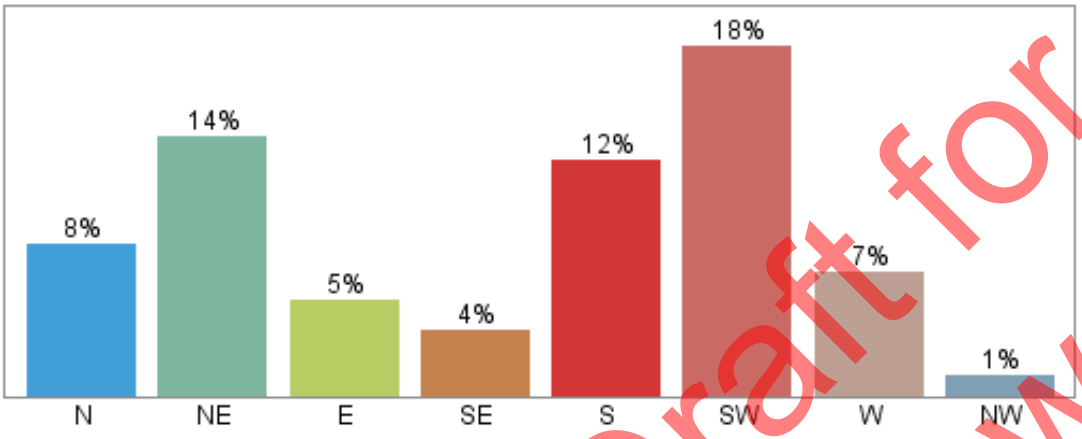

Note: Values do not sum to 100% because the wind direction is undefined when the wind speed is zero.

2.6 Risk Assessment

Numerous transportation and facility-based oil and chemical threats exist in proximity to Lake Pend Oreille. U.S. Highways 2 and 95, State Route 200, and the BNSF Railway/Montana Rail Link (MRL) paralleling Lake Pend Oreille and the Union Pacific (UP) rail line paralleling Pend Oreille River are the primary spill risks. The Cabinet Gorge Dam may also maintain an oil supply for normal operations. Facilities are located on the Clark Fork River approximately 8 miles upstream of Lake Pend Oreille.

2.6.1 Oil and Hazardous Materials Transit in Bonner County

Numerous trains travel through the city of Sandpoint daily and many carry hazardous materials and crude oil. In 2016, three railroads provided commodity transportation information to DEQ. These three railroads combined moved significantly more than 300,000 rail cars or tank cars containing various forms of hazardous materials and crude oil. Currently, approximately 24 unit trains per week carrying crude oil from the Bakken oil fields in the Dakotas and Saskatchewan travel through Sandpoint. As such, the Bakken crude oil trains represent approximately 52.5% of the total number of hazardous material carloads traveling this area. Additionally, butane and alcohols represent about 11.6% of the total hazmat carloads. Table 2-1 and Figure 2-4 summarize the types and quantities of hazardous materials transported through Bonner County.

Table 2-1: Oil and Hazardous Material Rail Shipments in Bonner County (More than 300,000 Total Loads Per Year)

Hazardous Material Rail Shipments in Bonner County per Year (2016)	Hazard Class	% of total
Bakken Crude (UN 1267)	3	52.5%
Flammable Gases	2.1	11.6%
Other Hazard Class 3 & Combustible Liquid	3	21.1%
Hazard Class 9 and other hazardous material	9	14.8%

Preliminary Draft for Agency Review

Figure 2-4: Hazardous Material by Rail in Bonner County

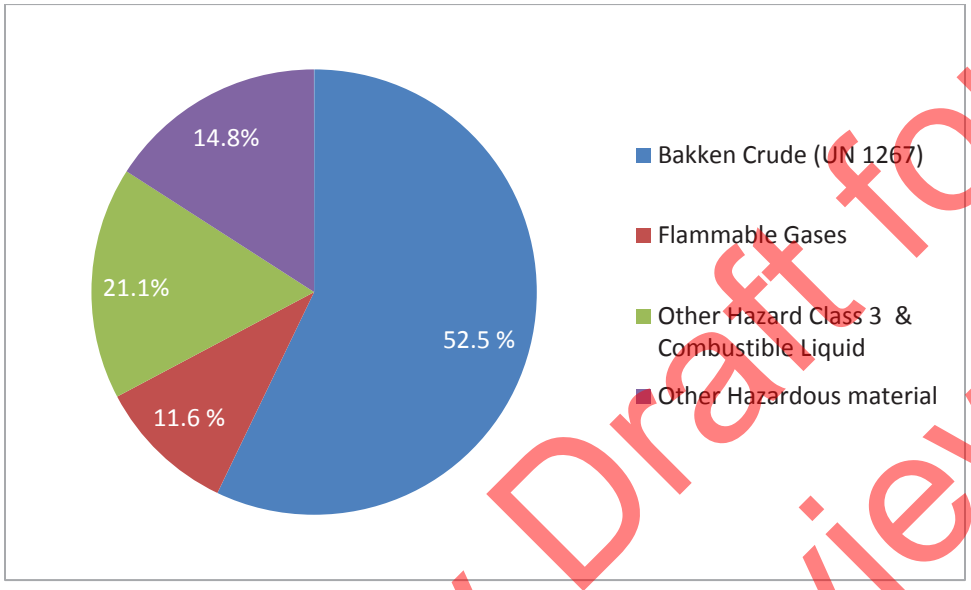

Further analysis of the rail commodities reveals that the 20 most frequently shipped commodities comprise 97% of the total number of packages shipped. A review of the most frequently shipped commodities against guidance from the North American Emergency Response Guidebook (US Department of Transportation, 2016) indicates the following:

- All of the top 20 hazardous materials require self-contained breathing apparatus (SCBA) as personal protective equipment, and 5 require SCBA personal protective equipment that is "specifically recommended by the manufacturer."
- 13 of the top 20 are liquid.
- 4 of the top 20 are gaseous.
- 1 of the top 20 is a solid (ammonium nitrate).
- Sulfuric acid and hydrochloric acid represent 1.1% of the total number of hazmat rail shipments. These materials are reactive and may release corrosive, toxic, or combustible gases.
- Aside from the two acids mentioned, all of the top 20 hazmat rail shipments are combustible.
- Evacuation criteria for accidents involving rail cars transporting these hazardous materials range from 0.5 to 1 mile.
- Allyl bromide comprises 2.5% of the total hazmat rail shipments. It has a specific gravity greater than 1 and will sink if spilled into a waterway.
- Alcohol NOS, sulfuric acid, hydrochloric acid, and methanol comprise 12.9% of the total hazmat rail shipments. These items are soluble in water.
- Current response trailers are set up for crude oil releases (see Section 4.6). Collection of other materials may create hazardous and explosive environments.

A considerable amount of hazardous materials is also shipped on the highways of Bonner County. In 2010, a qualitative survey was conducted to assess the amount and type of hazardous materials flowing

Preliminary Draft for Agency Review

through the county (Bonner County, 2010c). During two separate 2-hour periods at four different locations, a total of 310 commercial vehicles were observed passing through. Of those vehicles, 35 were observed to be placarded as containing hazardous materials. Table 2-2 lists the relative percentage of the types of materials observed. Not surprisingly, flammable liquid, such as gasoline and diesel fuel, were the largest contributors.

Table 2-2: Hazardous Materials by Highway in Bonner County

Hazard Class	Description	Number observed (for a 16 hour period)	Percentage
2.1	Flammable Gas	13	37.1
3	Flammable Liquid	16	45.7
5.1	Oxidizer	1	2.9
8	Corrosive	3	8.6
9	Class 9 (and Other)	2	5.7
	TOTAL	**35**	**100**

Since the 2010 survey was completed, mining operations in Canada have resulted in numerous truckloads of "ammonium nitrate liquid (hot concentrated solution)" (ID number 2426, Hazard Class 5.1) being transported through Bonner County. This material is very hazardous and may react explosively when heated (Cameo Chemicals, 2017).

The 2010 highway survey and recent observations result in a qualitative assessment because the survey was conducted for a short duration at one particular time of year. Seasonal variations in weather as well as commercial and recreational activities would alter the amount of fuel being delivered to or through the county. Nevertheless, the survey and observations indicate that a wide variety of hazardous materials are being transported by truck through Bonner County.

2.6.2 Roadway

U.S. Highways 2 and 95 and State Route 200 are the primary roadways passing through the GRP coverage area. ITD conducted a highway safety corridor analysis for Bonner County (Figure 2-5). Highway 200 along the north shore of Lake Pend Oreille represents a unique challenge in that accidents are more frequent and the highway runs very close to the lake shore.

Preliminary Draft for Agency Review

Figure 2-5: Highway Accident Safety Corridor Map for Bonner County

Preliminary Draft for Agency Review

2.6.3 Railroads

The topography of Bonner County has been very attractive to the railroad industry over the last one and a half centuries. Figure 2-6 shows the rail lines in Bonner County. The MRL follows the Clark Fork River and the northern shore of Lake Pend Oreille to Sandpoint. The UP railroad runs from Bonners Ferry southwards through Sandpoint and southwest toward Spokane. The UP railroad also shares trackage with the MRL. The BNSF Railway also runs south from Bonners Ferry through Sandpoint but crosses the Pend Oreille River at its junction with the lake; the BNSF line then continues south to the county line

where it runs adjacent to the UP railroad before turning west towards Spokane, Washington. The Pend Oreille Valley railroad is a short line railroad operating between Newport, Washington, and Sandpoint, Idaho, along the north side of the Pend Oreille River.

Railroad accidents in Bonner County are common. Between 1995 and 2014, the last date for which data were available, the Federal Railroad Administration reported 37 unique accidents, which includes all accidents from minor mishaps to significant derailments. In the spring of 2017, at least four significant derailments occurred in Bonner and Boundary Counties near waterways. Table 2-3 below summarizes those accidents by rail line. Figure 2-7 and Figure 2-8 show the location of those accidents; the north side of Sandpoint appears to be an area where accidents are more frequent.

Table 2-3: Bonner County Rail Accidents, 1995–2014

Railroad	Number of Accidents
BNSF	13
MRL	8
UP	15
Pend Oreille Valley	1
TOTAL	**37**

In fall 2016, at the request of DEQ, the four railroads provided copies of the public version of their bridge inspection reports. All bridge inspections were current in accordance with the Fixing America's Surface Transportation Act Public Law 114-94. The reports indicated that all bridges passed inspection and were "confirmed to have the capacity to safely carry traffic being operated over the bridge."

Preliminary Draft for Agency Review

Figure 2-6: Bonner County Railroads

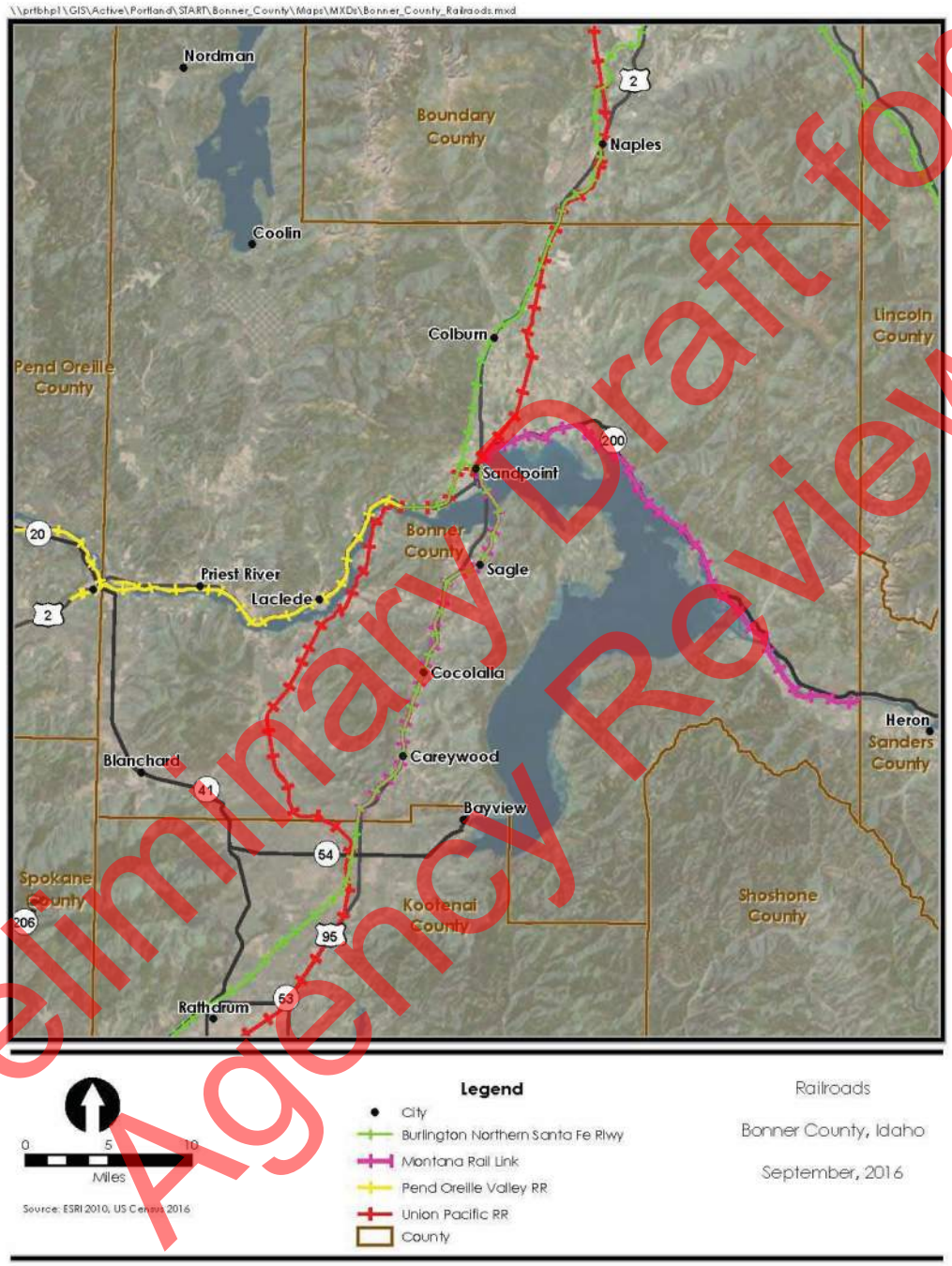

Preliminary Draft for Agency Review

Figure 2-7: Bonner County Train Accidents (1995–2014)

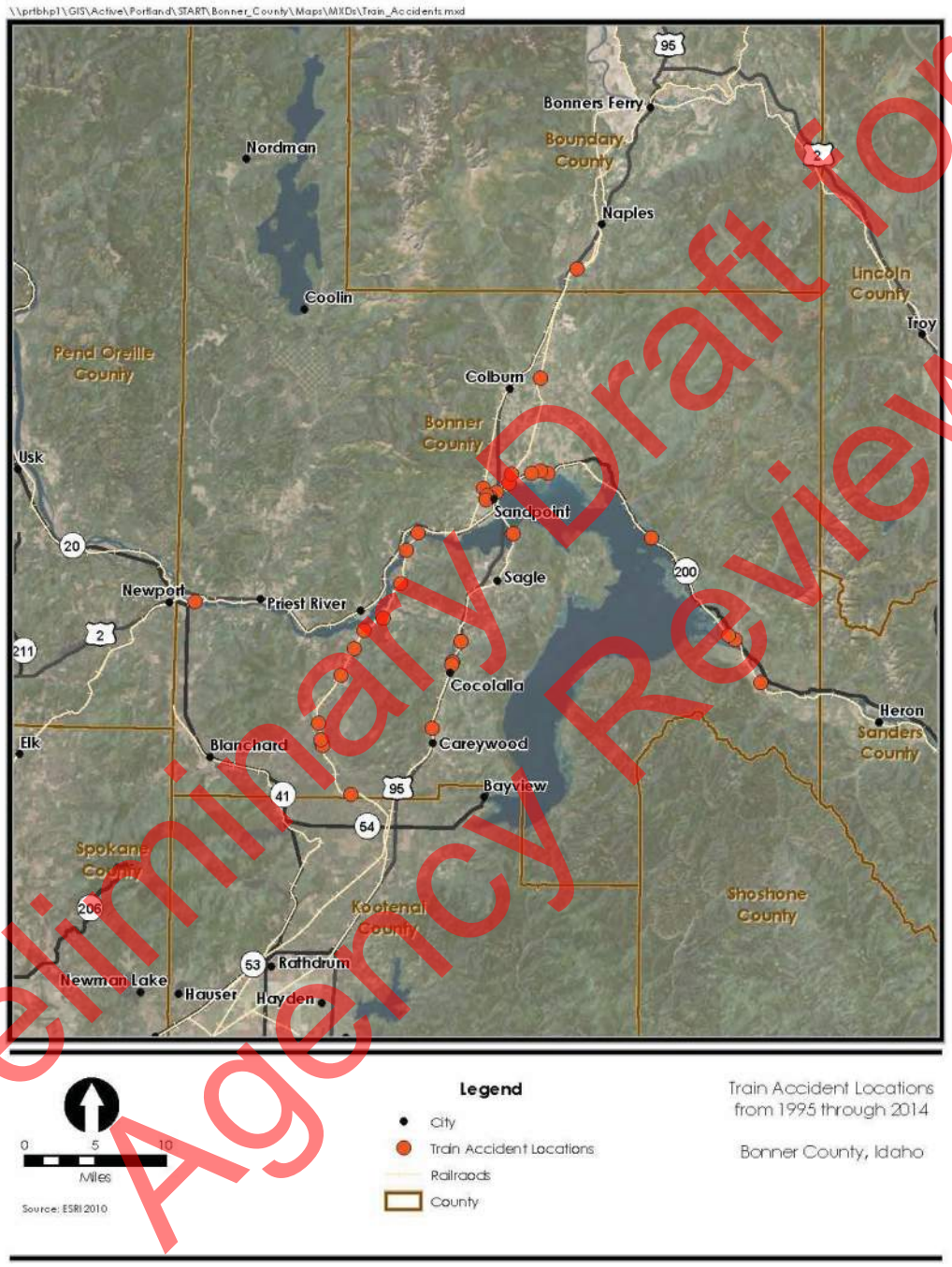

Preliminary Draft for Agency Review

Figure 2-8: Sandpoint, Idaho, Train Accidents (1995–2014)

Preliminary Draft for Agency Review

3 Response Options and Considerations

The table provided in this section correlates the type of terrain or other environmental feature with the response sectors. The response sectors are further described in Section 4.3.

Lake Pend Oreille GRP Spill Response Options and Considerations		Location							
		Sector 1A–1B West Pend Oreille	Sector 2 Westside Fire	Sector 3A–3D Sandpoint	Sector 4A Northside (Lakeshore)	Sector 4B Northside (Selle Valley)	Sector 5 Sam Owens	Sector 6 Clark Fork	Sector 7A–7B Sagle
Waterbody	Rivers	●	●		●	●		●	
	Creeks	●	●	●	●	●	●	●	●
	Lakes			●	●		●		●
	Pool Area formed by Dam							●	
	Wetland Area(s)	●	●	●	●	●	●	●	●
	Intermittent Streams (Seasonal Flow)	●	●	●	●	●	●	●	●
Potential Response Options	Source Control and Containment Activities	●	●	●	●	●	●	●	●
	Aerial/Vessel Surveillance Activities	●	●	●	●	●	●	●	●
	Wildlife Rescue and Rehabilitation Activities	●	●	●	●	●	●	●	●
	Shoreside Collection and Oil Recovery *(Note: 1)*	●	●	●	●	●	●	●	●
	Vessel-Based Skimming Operations *(Note: 2)*	●	●	●	●		●	●	●
	Shore- or Vessel-Based Skimming Operations *(Note: 3)*	●	●	●	●	●	●	●	●
	Shoreline Protection Booming *(Note: 4)*	●	●	●	●	●	●	●	●

Preliminary Draft for Agency Review

Lake Pend Oreille GRP
Spill Response Options and Considerations

		Location							
		Sector 1A–1B West Pend Oreille	Sector 2 Westside Fire	Sector 3A–3D Sandpoint	Sector 4A Northside (Lakeshore)	Sector 4B Northside (Selle Valley)	Sector 5 Sam Owens	Sector 6 Clark Fork	Sector 7A–7B Sagle
	Shoreline Cleanup Activities *(Note: 5)*	●	●	●	●	●	●	●	●
	Containment in Ditches or Outfalls (Note: 6)								
	In-Situ Burning ***Area is not pre-approved (Note: 7)***								
Considerations	High Water vs. Low Water Boat Launches	●	●	●	●		●	●	●
	Current – Ability to Boom	●						●	
	Weather Concerns – Freezing Waterway Potential and Safety of Roads	●	●	●	●	●	●	●	●
	Shoreside Access can be Limited by Private Property	●	●	●	●	●	●	●	●
	State or National Wildlife Refuge / Recreation Area	●	●	●	●		●	●	
	Threatened/Endangered Species	●	●	●	●	●	●	●	●
	Public or Commercial Marina(s) in Area		●	●			●		
	Recreational Boat Traffic	●	●	●	●		●	●	●
	Tribal Lands or Usual and Accustom Interests *(Note: 8)*	●	●	●	●	●	●	●	●
	Historic / Cultural District(s) in Area			●			●		
	Dam(s) in Area							●	
	U.S. Highway Corridor		●	●	●	●			●
	Oil Movement by Rail in Area	●	●	●	●	●			●
	Oil Pipeline(s) in Area								

Preliminary Draft for Agency Review

Note 1: Shoreside Collection and Oil Recovery response options should only happen in locations where skimmers or vacuum trucks can access the collected oil.
Note 2: Vessel-Based Skimming response options should include enhanced skimming using a U-boom, V-boom, or J-boom configuration in waters large enough for boats to maneuver (e.g., lake, large river).
Note 3: Shore-Based Skimming response options should include use of fixed skimmers: weir, belt, brush, drum, or other skimmer types.
Note 4: Shoreline Protection Booming should include deploying response strategies (booms) to divert and collect oil off of the water before shoreline areas are impacted, or deflect and exclude oil away from shoreline areas. These strategies include those published in this document (GRP response strategies), those provided in other plans (e.g., facility contingency plans), and "ad-hoc" strategies developed during the spill itself.
Note 5: Shoreline Cleanup options depend on safe and efficient access to spill locations and the type of river, creek, or stream bank present. Potential activities could include flooding, flushing, manual removal, vacuum, mechanical removal, sorbents, vegetation cutting, mechanical tilling/aeration, and/or sediment reworking/surf washing.
Note 6: A culvert block or underflow dam might be installed to aid in the recovery of spilled oil in small streams or those with intermittent flow. This strategy is used to protect downstream waterbodies such as Lake Pend Oreille and the rivers from upstream releases of oil.
Note 7: These areas are not pre-approved for the use of in-situ burning. Refer to the Northwest Area Contingency Plan for the in-situ burn policy. The use of in-situ burning would require incident approval from EPA, the Department of the Interior, and the National Oceanic and Atmospheric Administration.
Note 8: This sheet doesn't represent all locations where Tribes and Tribal Nations have lands or areas of specific interest (including lands established by treaty or rights to Usual and Accustom areas). Early coordination with tribal governments is highly recommended during a response, regardless of the spill location or potential impact areas.

Preliminary Draft for Agency Review

4 Response Strategies and Priorities

This section provides information on GRP response strategies and the order (priority) they should be implemented, based on potential spill origin points and their proximity to sensitive resources. The primary intended audience of this section is responders who will deploy physical responses at the accident area. Area maps, sector maps, and information on staging areas and boat launch locations are also provided in this section. During a spill incident, GRP response strategies should be implemented as soon as possible.

Unless circumstances unique to a particular spill situation dictate otherwise, the priority tables in Section 4 should be used to decide the order that GRP strategies are deployed. The downstream movement of spills and the time it takes to mobilize response resources to deploy GRP strategies must always be considered when setting implementation priorities. Information on resources at risk and sensitive areas can be found in Section 6 of this plan. Information on shoreline countermeasures can be found in Section 5 of this document and in the Northwest Area Shoreline Countermeasures Manual (NWACP Section 9420, available at http://www.rrt10nwac.com/NWACP/Default.aspx).

The GRP strategies provided in this section have been created to reduce a spill's impact on sensitive resources. They do not include everything that should or could be done during a response to lessen the chance of injury to natural, cultural, and economic resources at risk from spills. Although designed to be implemented during the initial phase of a spill, GRP strategies may continue to be used throughout a response at the discretion of the incident commander or unified command.

4.1 On-Site Considerations

4.1.1 Before Deploying a GRP Strategy (Questions to Ask)

- Are conditions safe? Response managers and responders must first determine if efforts to implement a response strategy would pose an undue risk to worker safety or the public, based on conditions present during the time of the emergency. No strategy should be implemented if doing so would threaten public safety or present an unreasonable risk to the safety of responders.
- Has initial control and containment been sufficiently achieved? Source control and containment of the spill at or near the source of a spill are always higher priorities than the deployment of GRP response strategies, especially when concurrent response activities are not possible.
- How far downstream or out into the river environment is the spill likely to travel before response personnel will be ready and able to deploy GRP response strategies?
- Are permits required? Contact the DEQ regional administrator in Coeur d'Alene for guidance. Additional information can be found in the NWACP Permit Summary Table (NWACP Section 9401)
- Will equipment or vehicles need to be staged on or near a roadway? If so, traffic control may be required.

Preliminary Draft for Agency Review

4.1.2 During Strategy Implementation (Things to Remember)

- On-scene conditions (weather, currents, lake level, waves, river speed, and debris) may require that strategies be modified to be effective. Weather and conditions experienced at a particular strategy location during an actual spill event will likely be different from those when data were gathered during field visits. Response managers and responders must remain flexible and modify the strategies provided in this section as needed to meet the challenges experienced during an actual response.
- Certain strategies may call for access points or staging areas that are not easily reached at all times of the year or in all conditions. Lake water levels factor heavily into the ability to access anchor points for booming.
- Oil containment booms must be free of twists, gaps, and debris in order to remain effective.
- The GRP response strategies provided in this section were designed for use with persistent heavy oils that float on water and may not be suitable for other petroleum products or hazardous substances.

4.1.3 After Strategy Implementation (Things to Understand)

- Oil containment booms should be maintained and periodically monitored to ensure effectiveness. Changes in river or current speed will likely require modifications to boom deflection angles (see additional discussion in Section 4.2.2). Depending on conditions, some booming strategies may require around-the-clock tending.
- Although designed for implementation during the initial phase of an oil spill, GRP strategies may continue to be deployed and implemented throughout the entire lifespan of a response, as deemed appropriate and necessary by the incident commander or unified command.

4.2 Hydrologic Considerations

4.2.1 Hydrographs for Rail-Adjacent GRP Waterbodies

The water level on Lake Pend Oreille varies between its low pool level of 2,051.5 ft and the upper level of 2,062.5 ft. The level is actively managed by the USACE to control flood waters from spring runoff as well as for power generation and recreational needs. Figure 4-1 shows a probability chart of the water level as measured at the Hope Gage station on the north side of the lake (USACE, 2016).

Inflows to Lake Pend Oreille from spring runoff are highest in May and June. The Clark Fork River dominates the spring flow and is managed at the Cabinet Gorge Dam. The Pack River, Lightning Creek, and Trestle Creek, all on the north side of the lake, are also significant contributors.

Current and historical stream flow information is available from the USACE Albeni Falls Dam website (http://www.nwd-wc.usace.army.mil/nws/hh/www/index.html). Current stream flow gaging stations are also reported by the U.S. Geological Survey (USGS). From upstream to

Preliminary Draft for Agency Review

downstream, USGS gaging stations include the following (click the name to open the gage-specific web page):

- **USGS 12391950 CLARK FORK RIVER BELOW CABINET GORGE DAM**
  Peak flows of about 55,000 cfs usually occur between May and June and drop throughout the summer. Flows are directly controlled by snowmelt and upstream dam operations. During low flow periods, discharges from the dam can be as low as 6,000 cfs but can vary widely; increases to over 32,000 cfs with subsequent reductions to 6,000 cfs are commonly observed within a single day. This will affect the wetted area of the river bank.
- **USGS 12392000 CLARK FORK AT WHITEHORSE RAPIDS NR CABINET**
  Peak flows of about 55,000 cfs usually occur between May and June and drop throughout the summer. Flows are directly controlled by snowmelt and upstream dam operations.
- **USGS 12392155 LIGHTNING CREEK AT CLARK FORK**
  Peak flows of about 1,200 cfs usually occur between May and June and drop throughout the summer. Flows are directly impacted by snowmelt. Lightning Creek is a tributary of the Clark Fork River and crosses under the MRL-operated track to the north.
- **USGS 12392300 PACK RIVER NR COLBURN ID**
  Peak flows of about 1,200 cfs usually occur between May and June and drop throughout the summer. Flows are directly impacted by seasonal snowmelt.
- **USGS 12395500 PEND OREILLE RIVER AT NEWPORT WA**
  Peak flows of about 60,000 cfs usually occur between May and June and drop throughout the summer. Flows are directly controlled by snowmelt and downstream dam operations.
- **USGS 12393000 PRIEST LAKE AT OUTLET NR COOLIN ID**
  Peak flows (as measured by gage height, not cfs) typically occur from May to October. Priest Lake is regulated to hold lake at levels desirable for recreation interests during summer months, and storage is released for power use downstream during winter months.
- **USGS 12395000 PRIEST RIVER NR PRIEST RIVER ID**
  Peak flows of about 6,000 cfs usually occur between May and June and drop throughout the summer. Flow is partly regulated by Priest Lake.

Preliminary Draft for Agency Review

Figure 4-1: Lake Pend Oreille Elevation (Hope Gage)—Probability Chart

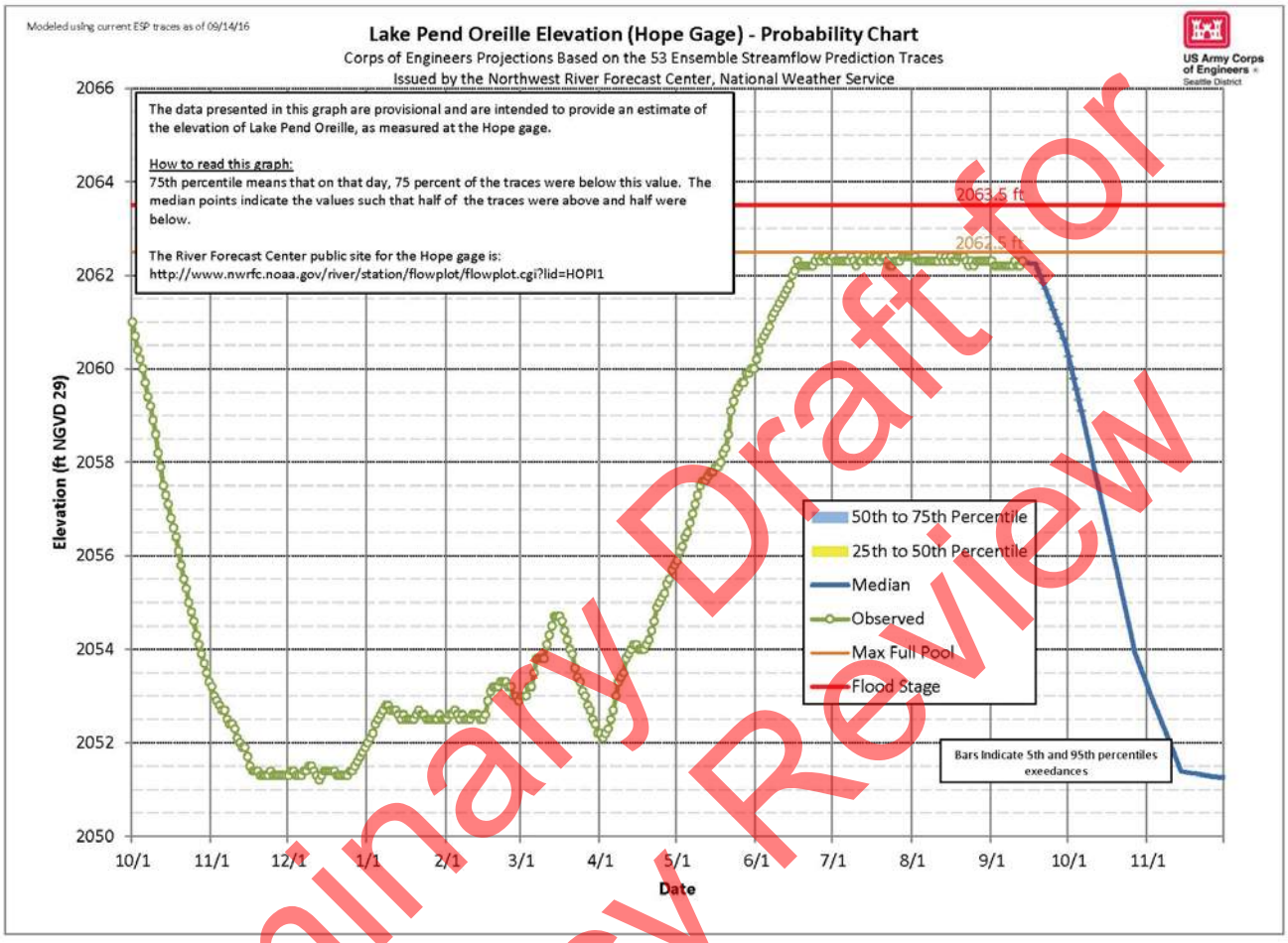

4.2.2 Stream Velocity Ranges

Stream velocity data are not available from any of the gages above. Water speed drift measurement data in Table 4-1 can be used to calculate river velocity/speed in ft per second or miles per hour. Velocities in miles per hour or nautical miles per hour (knots) need to be verified at several locations, as they are subject to change based on the configuration of the riverbed channel and variability in river discharge volumes.

Knot = 1.6 mile/hr	or	6,080 ft/hr	or	1.7 ft/sec

The table uses the time for floating debris to drift 100 ft, which is accurately determined by anchoring a line with two floating buoy markers attached at a spacing 100 ft apart. Floating debris is then thrown into the water approximately 20 ft upstream of the first buoy marker, and the time it takes the debris to transit the distance between the two marker buoys is recorded in seconds. This measurement assumes that the minimum escape velocity under a boom perpendicular (90 degrees) to the current is 1.2 ft per second. The table provides an estimate of the length of boom required for deflecting oil at a specified angle for a 110-foot profile

Preliminary Draft for Agency Review

(perpendicular length) to the current. It also provides an estimate of the number of anchors or shoreline tiebacks required for that length of boom assuming anchor points are required every 50 ft.

Table 4-1: Water Speed Drift Measurement Data and Boom Angle Considerations

Time to Drift 100 ft (seconds)	Velocity (ft/sec)	Max. Boom Deflection Angle (degrees)	Boom for 100 Foot Profile to Current (ft)	Anchors if Placed Every 50 Feet (number)
6	16.7	4.0	1,429	30
8	12.5	5.4	1,071	22
10	10.0	6.7	857	18
12	8.3	8.0	714	15
14	7.1	9.4	612	13
17	5.9	11.4	504	11
20	5.0	13.5	429	10
24	4.2	16.3	357	8
30	3.3	20.5	286	7
40	2.5	27.8	214	5
60	1.7	44.4	143	4
>86	<1.2	90.0	100	3

4.2.3 River Hazards

Although the Clark Fork River between the Cabinet Gorge Dam and Lake Pend Oreille is not commonly known for whitewater rapids, some key hazards do need consideration. At and below the confluence of Lightning Creek and the Clark Fork, large boulders and rocky debris washed in from Lightning Creek can create unusual hydraulics that are dependent on lake elevation and river flows. Additionally, large standing waves originating from dam discharges may be present below the Cabinet Gorge Dam.

A debris collection weir extending across the Clark Fork River (latitude 48.145820, longitude -116.202927), southeast of the City of Clark Fork, is used to deflect large woody debris in the river to the Clark Fork drift yard. The primary purpose of this weir is to prevent logs from hampering navigation in Lake Pend Oreille.

Responders intending on boating the Clark Fork River should scout these areas and consult local resources regarding current river navigation conditions.

4.2.4 Current Weather Conditions

Weather conditions on Lake Pend Oreille can vary dramatically from one moment to the next. Local wind conditions on the lake may be considerably different than conditions reported at the airport or other nearby weather stations. The long 34-mile fetch between Bayview at the southern end of the lake and Hope on the north can cause the buildup of very large waves, which could make boom deployment particularly hazardous.

Preliminary Draft for Agency Review

In the event of a significant spill, the incident commander may request specialized assistance from the National Weather Service (see contact sheet). Additionally, Table 4-2 lists several sources of local weather conditions. Boaters from outside the area are encouraged to seek additional local weather wisdom from the Bonner County Sheriff Marine Patrol or U.S. Coast Guard Auxiliary (see contact sheet).

Table 4-2: Current Weather Condition Resources

Resource Name	Location	Link
National Oceanic and Atmosphere Administration—National Weather Service	Spokane, WA	http://www.wrh.noaa.gov/otx/
Windbag Marina	Sandpoint, ID	http://www.nwd-wc.usace.army.mil/nws/hh/www/index.html# Then select "Albeni Falls Dam," then "Windbag Mariana"
Hope Weather	Hope, ID	http://www.nwd-wc.usace.army.mil/nws/hh/www/index.html# Then select "Albeni Falls Dam," then "Hope Weather"

4.3 Regional Area Maps

Appendix B provides maps depicting the Pend Oreille River and Lake Pend Oreille Regions. Each region is subdivided in geographic sectors. Hyperlinks are embedded in the sectors that lead to more detailed maps and tables and individual strategies. Listed below are the seven sectors, which largely correspond to the Bonner County fire districts. These items are hyperlinked to the corresponding start of the sector in Appendix B.

- Sector 1: West Pend Oreille Fire District
- Sector 2: Westside Fire District
- Sector 3: Sandpoint / Selkirk Fire District
- Sector 4: Northside Fire District
- Sector 5: Sam Owen Fire District
- Sector 6: Clark Fork Fire District
- Sector 7: Sagle Fire District

4.3.1 Clark Fork Delta

As described in Sections 2 and 6, the Clark Fork Delta is a unique ecosystem and has cultural significance for the Kalispel Tribe and Coeur d'Alene Tribe. Due to the complex labyrinth of the estuary and difficult access, spill response will be particularly challenging. Spills upstream of the Cabinet Gorge Dam would be addressed by strategy SR200 62.95 and largely caught in the dam area. Spills between the Cabinet Gorge Dam and the City of Clark Fork, which is about 7 miles downstream, may be addressed by the booming strategy for the Clark Fork Bridge (SR200 56.05). Spills downstream of this point may be addressed by applying booms to the

Preliminary Draft for Agency Review

shear boom (i.e., debris diversion weir [Mouth of Clark Fork Strategy SR200 55.3] and Johnson Creek Trestle [Strategy SR200 54.83]).

The travel time for a plume in the Clark Fork River to reach the delta is dependent upon the location of the spill, the amount of spilled material, the type of material spilled, and water flow. Appendix C provides the results of an analysis that shows the travel time between the Cabinet Gorge Dam and the delta could range between 1 and 4 hours.

As shown in Figure 4-2, several booming options are suggested based upon water level. During periods of low river flow, typically between late June and early April, the Clark Fork Bridge (SR200 56.05) or Mouth of Clark Fork SR200 55.3—Booming Option A, may be feasible. About 1 mile separates the two strategies. Of these two strategies, the Clark Fork Bridge is preferable for the following reasons:

- Easier river access
- Ability to anchor boom to permanent structures in the stream bed
- Not adversely affected by potential runoff from Lightning Creek

High river flows may preclude safe installation of boom across the river at either SR200 55.3—Booming Option A, or the Clark Fork Bridge. In these cases, SR200 55.3—Booming Option B could be used to attach diversion boom to the permanently installed shear debris diversion in several locations. Booming Option B includes diversion booms further downstream near the drift yard, as shown in Figure 4-3.

The shear debris diversion extends approximately 16 in. below the water surface, and it may provide for sufficient contaminant diversion such that additional temporary boom is unnecessary. If used, temporary boom should be applied on the upstream side of the permanent boom. Lag bolts may be screwed into the permanent boom structure to secure temporary boom.

The effectiveness of the SR200 55.3—Booming Option B response will be hampered by:

- Extraordinary length of boom needed (up to 8,400 ft of boom would be needed for the full deployment of Option B)
- Large number of swift water technicians needed (two teams of three)
- Current lack of permanent anchor points away from the shear debris diversion
- Current deteriorated condition of the shear debris diversion
- Swift moving water during periods of high flow, such as spring runoff
- Poor boat access

Deployment of SR200 55.3—Booming Option B may make the Clark Fork drift yard boat ramp unusable because the spill may direct itself to the ramp.

Preliminary Draft for Agency Review

The incident commander will need to evaluate these factors with consultation from the local response community, Idaho Fish and Game (IDFG), the Kalispel Tribe, Avista Dam Operations, and USACE to evaluate the safety and efficacy of this strategy deployment.

Recommendations

The strategy for the Clark Fork Delta (Strategy SR200 55.3) represents the last opportunity to protect the delta and Lake Pend Oreille from a spill in the Clark Fork River. Future spill response preparations should consider the following enhancements that would facilitate spill response safety and effectiveness.

- Installation of a cable from the Clark Fork auto bridge or railroad trestle that could be lowered to the water level for attachment of collection booms (see Strategy SR200 56.05 photos)
- Installation of permanent anchor points on the river banks near the Clark Fork auto bridge or railroad trestle
- Installation of permanent anchor points that would be integrated with the shear debris diversion
- Caching of additional boom in the City of Clark Fork
- Additional training of the Clark Fork and Sam Owen Fire Departments for swift water boom deployment
- Staging of an appropriately equipped jet boat at the drift yard boat ramp (SR200 51.69) (This boat could serve multiple purposes for a variety of agencies.)
- Construction of an additional boat ramp near the Clark Fork Bridge

Safety Note: As of June 2017, the shear debris diversion boom is in a state of disrepair. Emergency responders should use extreme caution to avoid getting sucked under the structure or pinched between a boat and the structure. The surface of the structure may be slippery, and due to the buildup of vegetation, weak points in the walking surface may not be visible; walking on the structure should be avoided.

Cultural Note: Certain areas in the Clark Fork Delta have special significance to the Kalispel Tribe. The incident commander should contact USACE, the State Historic Preservation Office (SHPO), and the Kalispel Tribe for guidance on the placement of boom anchors; see the notification information at the beginning of this document for contact information.

4.3.2 Denton Slough

Denton Slough is also a unique and valuable wetland that hosts significant cultural resources. Several booming strategies are depicted in Appendix B, Sector 5, SR200 50.4, and additional information is provided in Table 4-3. The booming strategy selected is a function of the water level and the location of the spilled material. If the spilled material originates from the slough itself, then the boom should be located as shown for Option A in Figure 4-4. This will mitigate the flow of contamination to Lake Pend Oreille.

Preliminary Draft for Agency Review

If the contamination originates in Lake Pend Oreille, then a boom located as shown for Option B, will mitigate contaminant migration into the slough. This option requires an in-water anchor for the west side.

At low water, the slough is largely a mud flat and boat access is extremely difficult. The water channel is located on the west side of the slough, as depicted in Figure 4-4. During low water conditions, a short boom across the water channel may mitigate contaminant migration into or out of the slough. However, anchoring the boom could be problematic due to soft mud and shallow water access.

Due to the presence of cultural resources in this area, the incident commander should contact the USACE, SHPO, and the Kalispel Tribe for guidance on the placement of boom anchors (see contact sheet).

Safety Note: Emergency responders should use caution in this area to avoid getting themselves or their boat stuck in the mud.

Preliminary Draft for Agency Review

Figure 4-2: SR200 55.3 Mouth of Clark Fork Booming Options

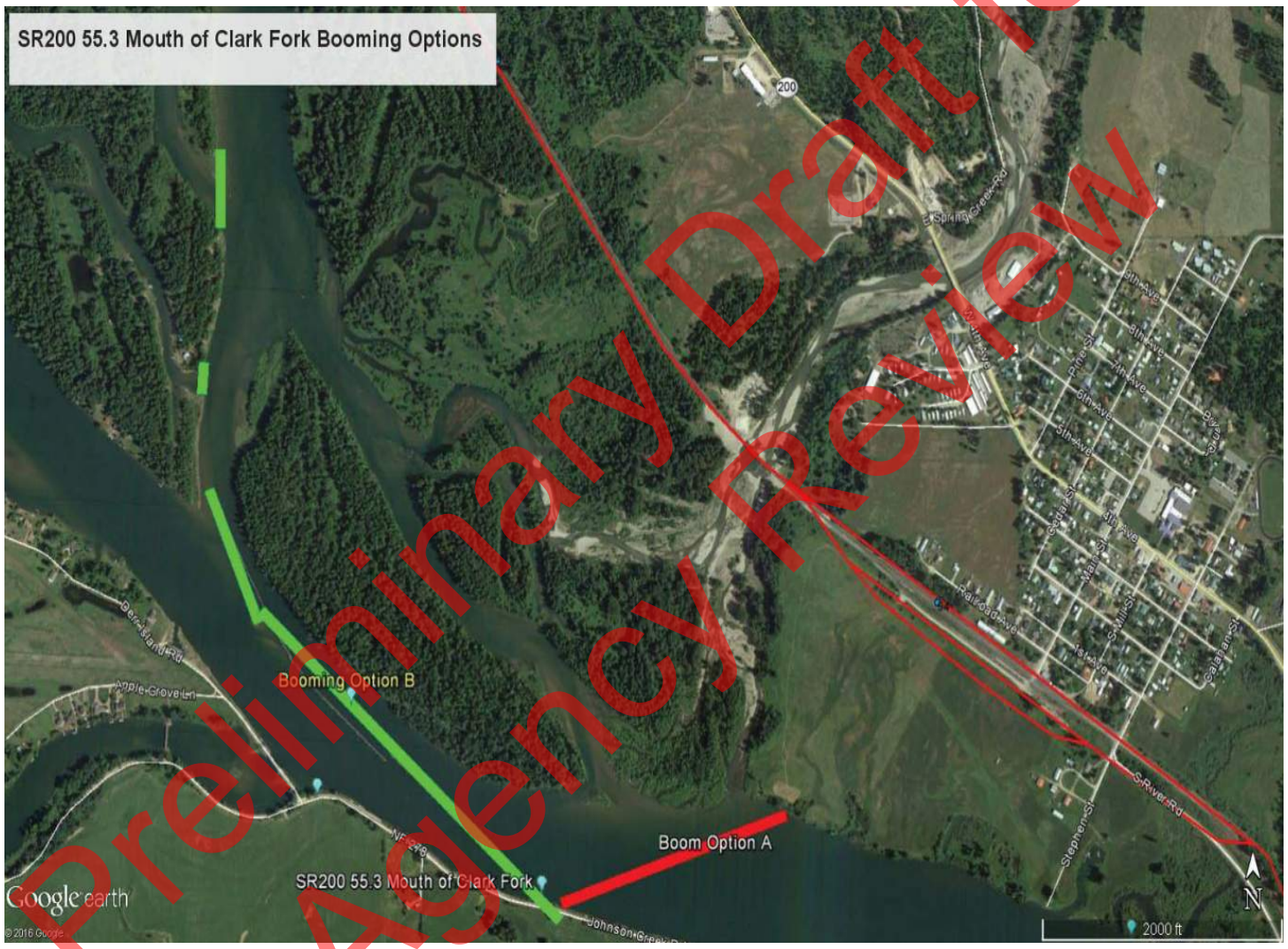

Preliminary Draft for Agency Review

Figure 4-3: SR200 55.3 Mouth of Clark Fork Booming Options: Drift Yard Area

Preliminary Draft for Agency Review

Figure 4-4: SR200 50.4 Denton Slough Booming Options

Preliminary Draft for Agency Review

Table 4-3: Denton Slough Supplemental Information

Denton Slough	(MRL4 98.43) SR200 50.4
Implementation	Three booming options are suggested depending upon source of contamination, wind direction, and water level. **See Section 4.3.2 for further descriptions and a larger booming photo.** • Boom Option A—Secure boom to east and west shorelines to steel posts with one in-water anchor in the middle. • Boom Option B—Secure east side to steel post and west side to an in-water anchor, with another in-water anchor in the middle if needed. • Boom Option C for low water situations—Secure east and west sides to steel posts driven into channel bottom. Anticipate significant mud for Boom Option C. • Deploy deflection boom as shown in photo below for contamination moving from the lake northwards.
Field Notes	• No vehicle access on west side; Dormar Drive, also known as Hope School Road, is gated and does not reach the shore. • Vacuum truck access is good on east side • Use Clark Fork River boat ramp for access from water. No boat ramp at this location. • 4WD Access: **No** • Seasonal Access Only: **No** • Locked Gates: o West side: **Yes** o East side: **No**
Contact Notes	For all booming options, contact USACE, SHPO, and Kalispel Tribe for boom anchor location limitations.

4.4 Priority Tables

Certain locations along the principal transportation corridors in Bonner County are more susceptible to transportation accidents. Section 2.6 shows areas in which accidents have been more frequent. This information was used to qualitatively select several hazard zones to develop a list of additional response suggestions. Seven hazard zones were identified and are shown in Figure 4-5 and Figure 4-6.

For each of the seven hazard zones, Table 4-4 lists suggested nearby boat ramps, response strategies, and needed key equipment. The order in which the strategies are deployed is dependent entirely on the location of an accident in that hazard zone; the incident commander will need to make a field judgement on which strategy to deploy first.

The hazard zones depicted in Figure 4-5 and Figure 4-6 are based on risk of highway and rail accidents, whereas the sectors described in Section 4.3 are based on fire districts. Table 4-4 correlates the hazard zones to nearby sectors and response strategies.

Preliminary Draft for Agency Review

The boat ramps listed are generally near the hazard zone. Most boat ramps may not be practicable in low water or adverse weather conditions. Local wisdom will be the key to proper boat ramp selection. Additional discussion on boat ramps is given in Section 4.6.

The list below provides some additional suggestions for prioritization of response activities:

1. Safety is always the number one priority. Do not attempt to implement a strategy or take action that will unduly jeopardize worker safety or the public.
2. Ensure public evacuation is considered immediately. Oil train accidents have often erupted into severe fires shortly after derailment. See the additional discussion in the Preface.
3. Ensure appropriate notifications have been made; see additional discussion in Section 1.2.
4. Control and contain the source of the spill; mobilize resources to the spill location. Source control and containment are always a higher priority than implementing GRP strategies.
5. Determining the priority or order that GRP strategies should be implemented is based on the location of the spill or affected area.
6. As response resources become available, implement the GRP strategies.

In summary:

Protecting human life is always the highest priority—public evacuation should be considered immediately. Control and containment of a spill becomes the next priority, followed by the appropriate response strategy. The information contained in the strategy descriptions (Appendix B) is recommended guidance, not prescriptive requirements.

Preliminary Draft for Agency Review

Figure 4-5: Hazard Zone A

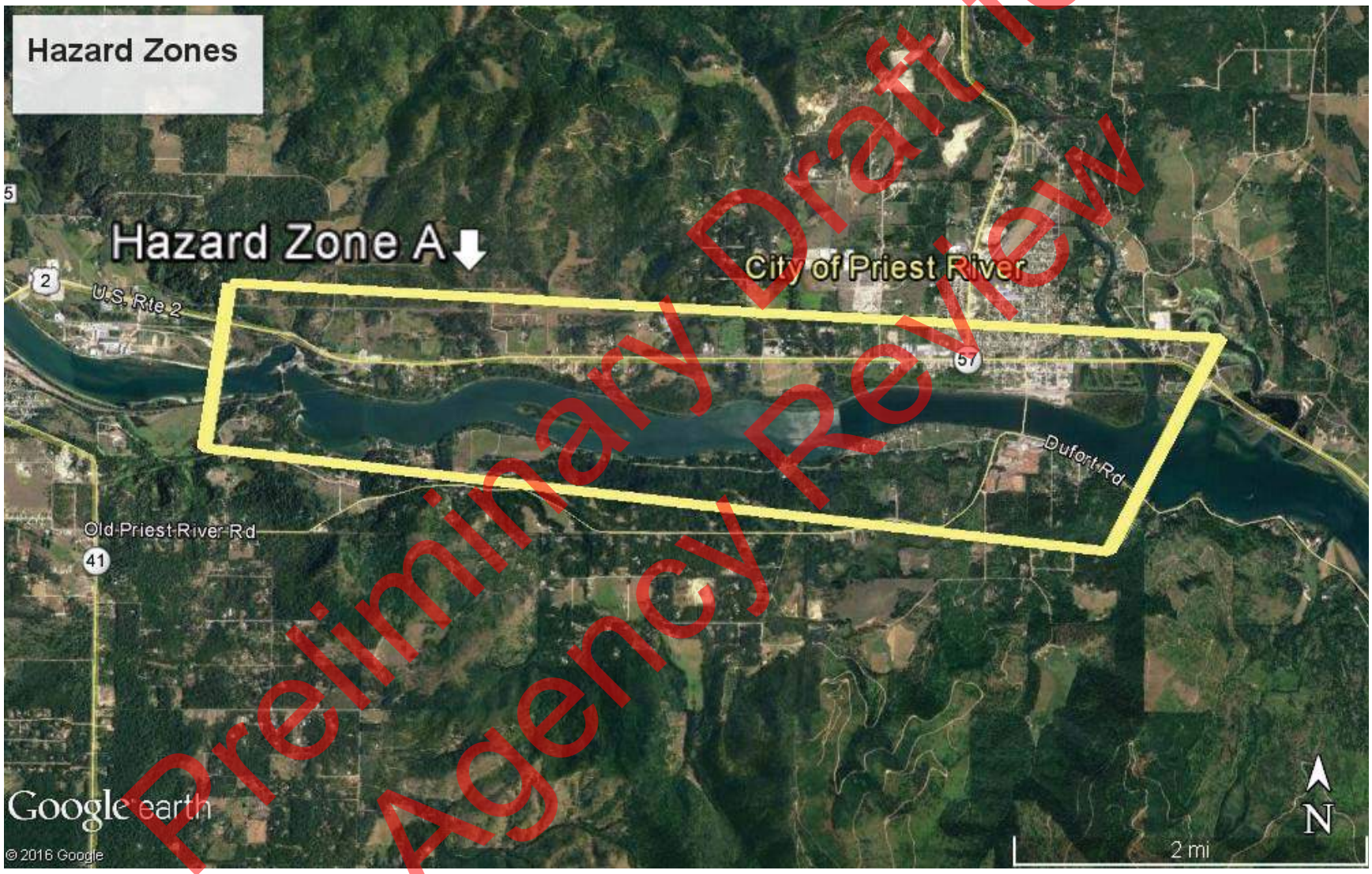

Preliminary Draft for Agency Review

Figure 4-6: Hazard Zones B through G

Preliminary Draft for Agency Review

Table 4-4: Hazard Prioritization Tables

Hazard Zone A — US 2 (Priest River)

General Strategy Description Open Water Collection and Diversion Strategies

Staging Area Common Name	**Staging Area**
Priest River City	US2 6.38

Suggested Boat Launches	**Site ID**
Priest River City	US2 6.38
Albeni Cove	US2 2.21

		Equipment Needs					
Suggested Strategies	**Site ID**	Curtain Boom(ft)	Recovery Device	PP Line (ft)	Steel Post Anchors	In Water Anchors	Jet Boat Needed?
10th Outfall	US2 5.73	150	Curtain boom	200	4	1	Yes
Priest River Intake	US2 6.38	550	Curtain boom	700	4	1	Yes
Albeni Falls Rec	US2 2.21	2,200	Vacuum Truck; Portable Skimmer	2,800	24	4	Yes
Albeni Falls	US2 2.19	1,200	Vacuum Truck; Portable Skimmer	1,500	12	3	Yes
		4,100		***5,200***	***44***	***9***	

Related Sectors

Sector 1A

Sector 1B

Preliminary Draft for Agency Review

Hazard Zone B US95 Sagle & Cocolalla

Sagle

General Strategy Description Open Water Collection and Diversion Strategies

Staging Area Common Name	**Staging Area**
Dover Bay Marina	US2 25.16

Suggested Boat Launches	**Site ID**
Bottle Bay Bridge	US95 471.08
Sandpoint City Beach	US95 473.87
Memorial Park Boat Ramp	US2 27.9

		Equipment Needs					
Suggested Strategies	**Site ID**	Curtain Boom(ft)	Recovery Device	PP Line (ft)	Steel Post Anchors	In Water Anchors	Jet Boat Needed?
Bottle Bay Bridge	US95 471.08	100	Curtain boom	150	6	0	No
Dover Intake	US2 25.63	800	Curtain boom	1,000	4	1	Yes
Dover Bay Marina	US2 25.16	1,000	Curtain boom	1,250	6	3	Yes
		1,900		***500***	***16***	***1***	

Related Sectors

Sector 7B

Preliminary Draft for Agency Review

Hazard Zone B US95 Sagle & Cocolalla

Cocolalla

General Strategy Description Open Water Collection and Diversion Strategies

Staging Area Common Name	**Staging Area**
Lake Cocolalla	US 95 463.62

Suggested Boat Launches	**Site ID**
Lake Cocolalla	US95 463.62
Round Lake	US95 465.12
Morton Slough	US2 16.29

		Equipment Needs					
Suggested Strategies	**Site ID**	Curtain Boom (ft)	Recovery Device	PP Line (ft)	Steel Post Anchors	In Water Anchors	Jet Boat Needed?
Cocolalla Creek Outlet	US95 463.82	200	Curtain boom	250	6	0	Yes
Cocolalla Loop Rd Bridge	US95 463.95	50	Curtain boom	50	6	0	No
Round Lake	US95 465.11	200	Curtain boom	0	6	0	Yes
Cocolalla Creek Mouth	US2 16.06	1,000	Curtain boom	1,000	10	1	Yes
		1,450		***1,300***	***28***	***1***	

Related Sectors

Sector 7A

Sector 7B

Sector 2A

Preliminary Draft for Agency Review

Hazard Zone C Sandpoint & Convergence

Sandpoint Area

General Strategy Description Open Water Collection and Diversion Strategies

Staging Area Common Name	**Staging Area**
Sandpoint City Beach	US95 473.87

Suggested Boat Launches	**Site ID**
Sandpoint City Beach	US95 473.87

Suggested Strategies	**Site ID**	**Equipment Needs**					
		Curtain Boom (ft)	Recovery Device	PP Line (ft)	Steel Post Anchors	In Water Anchors	Jet Boat Needed?
Lower Sand Creek	US95 474.31	700	Vacuum Truck; Portable Skimmer	500	5	0	Yes
Mouth of Sand Creek	US 95 473.91	360	Vacuum Truck; Curtain boom	450	0	0	Yes
Sandpoint Intake	US95 473.84	800	Curtain boom	1,000	0	6	Yes
Sandpoint City Beach	US95 473.9	2,000	Curtain boom	2,500	0	4	Yes
Long Bridge	US95 472.85	3,500	Curtain boom	4,375	8	0	Yes
		7,360		***8,825***	***13***	***10***	

Related Sectors

Sector 3B

Preliminary Draft for Agency Review

Hazard Zone C Sandpoint & Convergence

Convergence

General Strategy Description Diversion Strategies

Staging Area Common Name	**Staging Area**
Sandpoint City Beach	US95 473.87

Suggested Boat Launches	**Site ID**
Sandpoint City Beach	US95 473.87
Memorial Park Boat Ramp	US2 27.9

		Equipment Needs					
Suggested Strategies	**Site ID**	Curtain Boom (ft)	Recovery Device	PP Line (ft)	Steel Post Anchors	In Water Anchors	Jet Boat Needed?
Sand Creek Trestle	US95 475.3	750	Vacuum Truck; Portable Skimmer	1,000	5	0	Yes
Lower Sand Creek	US95 474.31	700	Vacuum Truck; Portable Skimmer	500	5	0	Yes
Mouth of Sand Creek	US95 473.91	360	Portable Skimmer; Vacuum Truck	450	0	0	Yes
Sandpoint Intake	US95 473.84	800	Curtain boom	1,000	0	6	Yes
Long Bridge	US95 472.85	3,500	Curtain boom	4,375	8	0	Yes
		6,110		***2,950***	***10***	***6***	

Related Sectors

Sector 3B

Sector 3C

Sector 3D

Comments: The numerous storm water outfalls draining to Sand Creek need to be considered. A spill in the convergence area may be blocked within the surface water drain before it goes into the underground storm water drain. Once it enters Sand Creek, then the strategies should be considered.

Preliminary Draft for Agency Review

Hazard Zone D SR 200 Kootenai

General Strategy Description Open Water Collection and Diversion Strategies

Staging Area Common Name	**Staging Area**
Sandpoint City Beach	US95 473.87

Suggested Boat Launches	**Site ID**
Sandpoint City Beach	US95 473.87
Memorial Park Boat Ramp	US2
Laclede	US2

		Equipment Needs					
Suggested Strategies	**Site ID**	Curtain Boom (ft)	Recovery Device	PP Line (ft)	Steel Post Anchors	In Water Anchors	Jet Boat Needed?
Boyer Slough	SR200 33.15	200	Portable Skimmer; Vacuum Truck	300	6	0	Yes
Sandpoint Intake	US95 473.84	800	Curtain boom	1,000	0	6	Yes
Long Bridge	US95 472.85	3,500	Portable Skimmer; Vacuum Truck; Absorbent Boom	4,375	8	0	Yes
Sandpoint City Beach	US95 473.90	2,000	Curtain boom	2,500	0	4	Yes
		6,500		***8,175***	***14***	***10***	

Related Sectors

Sector 4A

Preliminary Draft for Agency Review

Hazard Zone E SR 200 Trestle Creek to Pack River

General Strategy Description: Open Water Collection

Staging Area Common Name	**Staging Area**
Trestle Creek	SR200 42.59

Suggested Boat Launches	**Site ID**
Trestle Creek	SR200 42.59
Hawkins Point	SR200 41.38
Hope Boat Basin	SR200 44.98

		Equipment Needs					
Suggested Strategies	**Site ID**	Curtain Boom (ft)	Recovery Device	PP Line (ft)	Steel Post Anchors	In Water Anchors	Jet Boat Needed?
Pack River Bridge	SR200 38.69	700	Curtain booms	900	18	0	No
Pack River Trestle	SR200 40.78	300	Curtain boom	450	10	0	Yes
Sunnyside Intake	SR200 41.28	550	Curtain boom	650	0	1	Yes
Trestle Creek	SR200 42.09	950	Curtain boom	1,250	6	3	Yes
		2,500		***3,250***	***34***	***4***	

Related Sectors

Sector 4A

Sector 5

Preliminary Draft for Agency Review

Hazard Zone F SR 200 Clark Fork to Hope

General Strategy Description: Open Water Collection

Staging Area Common Name	**Staging Area**
Denton Slough	SR200 50.40

Suggested Boat Launches	**Site ID**
Island View	SR200 51.63
	SR200 49.76
Beyond Hope	SR200 47.90

		Equipment Needs					
Suggested Strategies	**Site ID**	Curtain Boom (ft)	Recovery Device	PP Line (ft)	Steel Post Anchors	In Water Anchors	Jet Boat Needed?
Denton Slough	SR200 50.4	1,900	Vacuum truck & skimmer	2,400	10	3	Yes
David Thompson	SR200 50.19	400	Curtain boom	525	6	1	Yes
Kullyspell Intake	SR200 49.45	1,500	Curtain boom	1,900	6	1	Yes
Islandview Intake	SR200 48.08	550	Curtain boom	750	0	3	Yes
Red Fir Intake	SR200 46.4	900	Curtain boom	1,100	8	3	Yes
		5,250		***6,675***	***30***	***11***	

Related Sectors

Sector 5

Sector 6

Preliminary Draft for Agency Review

Hazard Zone G Clark Fork Delta

General Strategy Description: Diversion to collection area

Staging Area Common Name	Staging Area
Clark Fork Drift Yard Boat Ramp	SR200 51.69

Suggested Boat Launches	Site ID
Clark Fork Drift Yard Boat Ramp	SR200 51.69
Derr Island Boat Ramp	SR200 54.83
Johnson Creek Boat Ramp	SR200 54.28

Note: Not all of these strategies would be deployed simultaneously.

Suggested Strategies	Site ID	Equipment Needs					
		Curtain Boom (ft)	Recovery Device	PP Line (ft)	Steel Post Anchors	In Water Anchors	Jet Boat Needed?
Mouth of Clark Fork	SR200 55.3	8,400	Skimmer & vacuum truck	1,000	20	5	Yes
Clark Fork Dam	SR200 62.95	1,300	Skimmer & vacuum truck	1,700	8	2	Yes
Clark Fork Bridge	SR200 56.05	1,100	Curtain boom vacuum truck	1,350	5	2	Yes
Johnson Creek Trestle	SR200 54.83	300	Curtain boom	400	6	10	Yes

Related Sectors

Sector 6

Preliminary Draft for Agency Review

4.5 Water Users

Bonner County has 19 registered public water systems that obtain surface water. Of these, eleven actively draw water from Lake Pend Oreille or the Pend Oreille River. Table 4-5 lists those water users and current contact information; Figure 4-7 shows their general location. These water systems are most likely to be adversely affected by a nearby hazardous material spill. The strategy reports in Appendix B provide guidance for notifying and protecting these water systems and their sources. The remaining public water systems draw surface water from tributary streams that are not adjacent to the transportation corridors.

Bonner County also has several hundred private and public water system wells, and the list of those wells is dynamic. In the event of a hazardous material spill, the Idaho Department of Water Resources should be contacted so that they can assist in notifying nearby water users. Contact the drinking water supervisor in the Coeur d'Alene regional office at 208-769-1422.

Table 4-5: Public Water Systems Drawing Surface Water from Lake Pend Oreille or Pend Oreille River

Sector	Strategy Sheet Identifier (See Appendix B)	Public Water System Number	Public Water System Name	Administrative Contact Phone	Source Name
1A	US2 6.38	ID1090107	City of Priest River	208-448-2123	Pend Oreille River
2	US2 14.37	ID1090073	Laclede Water Dist.	208-265-4270	Pend Oreille River
2	US2 25.63	ID1090193	City of Dover	208-755-1116	Pend Oreille River
3B	US95 473.84	ID1090121	Sandpoint Public Works Dept.	208-263-3407	Lake Pend Oreille
4A	SR200 33.15	ID1090092	Oden Water Assn. Inc.	208-255-4001	Lake Pend Oreille
4A	SR200 41.28	ID1090132	Sunnyside Water Assn.	208-265-4270	Lake Pend Oreille
5	SR200 46.4	ID1090113	Red Fir Resort	208-264-5287	Lake Pend Oreille
5	SR200 48.08	ID1090057	Island View Resort	208-264-5509	Lake Pend Oreille
5	SR200 49.45	ID1090053	Kullyspell Estates	208-290-4184	Pend Oreille River
6	SR200 62.95	ID1090012	Cabinet Gorge Dam	208-266-1531	Lake Pend Oreille
7B	US95 472.98	ID1090129	Sourdough Point	208-265-4270	Lake Pend Oreille

Preliminary Draft for Agency Review

Figure 4-7: Public Water Systems Drawing from Lake Pend Oreille and the Pend Oreille River

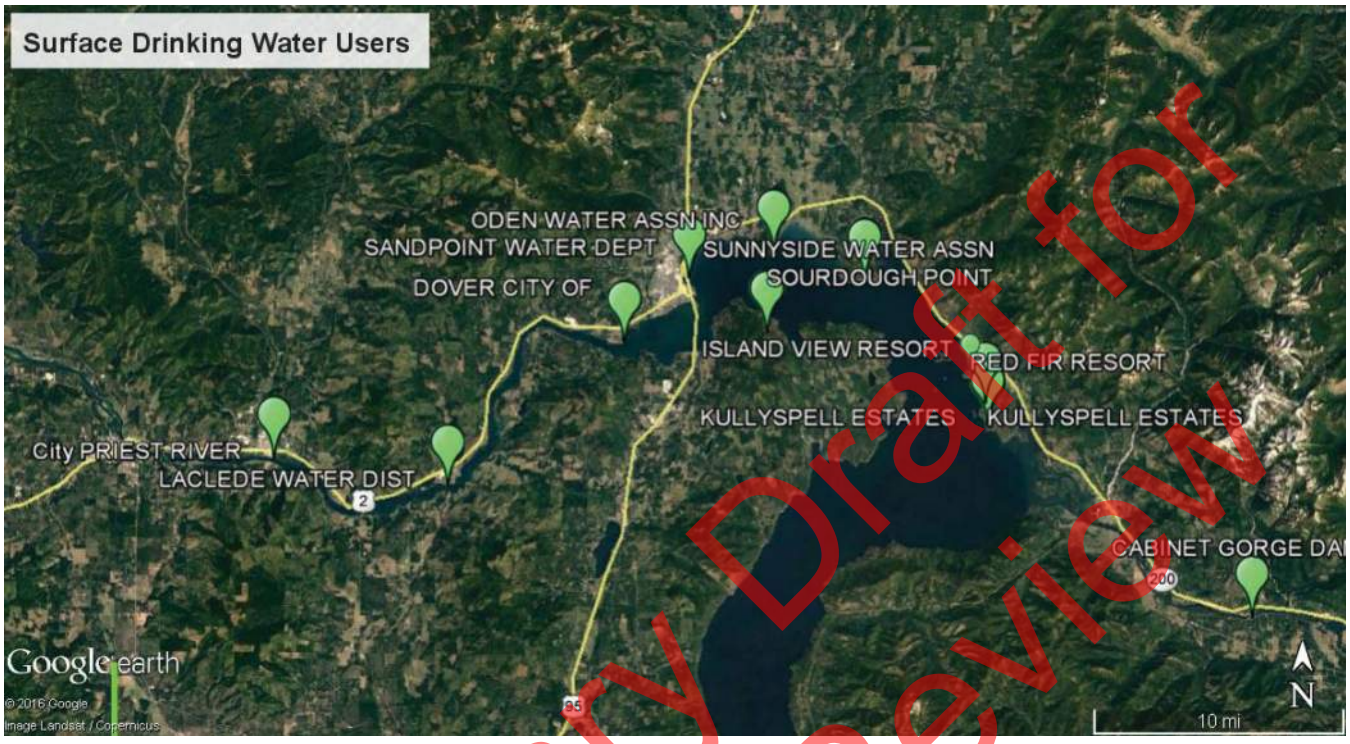

4.6 Equipment Cache

Three oil-spill response equipment caches are located in the Lake Pend Oreille region in Sandpoint, Bonners Ferry, and Cabinet Gorge Dam. Appendix D illustrates the current inventory of key items and provides the locations of the caches. The strategy reports in Appendix B indicate the location of the nearest equipment cache (see second page, left side of each strategy report). Additional equipment is available from the Regional Response Team 1 in Coeur d'Alene; their boom inventory is included in Appendix D.

Note that the equipment trailers do not have an assigned or designated tow vehicle to move the trailer. The written inventory provided for the various caches did not clearly quantify the amount of rope and line available.

A comparison of the inventory presented in Appendix D with the equipment needs stated in the prioritization tables (Section 4.4) reveals that the amount of boom and anchor posts available appears adequate for most anticipated needs. A notable exception, however, is the amount of boom needed for the Mouth of the Clark Fork (SR200 55.3), which requires over 8,000 ft of boom. Additionally, recovery devices, such as skimmers and vacuum trucks, are not staged within the Lake Pend Oreille region and would need to be obtained from outside the area. Table 4-6 lists some of the work boats available in the Lake Pend Oreille area that could be used to implement a hazardous material spill response.

Preliminary Draft for Agency Review

Table 4-6: Available Work Boats for Boom Deployment

Boat Type	Most Common Location	Owner / Contact	Additional Equipment
Uncertain	Hope Basin	Idaho Fish and Game	Uncertain
28 ft **23 ft** **26 ft** **28 ft** **30 ft** **30 ft** **18 ft** **24 ft** **2 ea Jet skies**	Coolin, ID Riley Creek Dover, ID Waterlife Hope Basin Garfield Bay (year round availability) Trailerable—location varies Trailerable—location varies Trailerable—location varies	Bonner County Sheriff	2 ea 225 hp engines Single 225 hp Single 225 hp 2 ea 225 hp engines 2 ea 225 hp engines 2 ea 225 hp engines 40 hp. Low draft Single 225 hp Uncertain
Various private vessels	Various	U.S. Coast Guard Auxiliary[1]	Uncertain
Various	Hope, ID	Kramer Marina	Uncertain
Type 4 Fire Boat	Priest Lake	West Priest Lake Fire	Uncertain
27 ft. Boston Whaler	Sandpoint	Selkirk Fire Department	750 gpm midship pump
27 ft. Jet Boat[2]	Albeni Cove	West Pend Oreille Fire	1750 gpm fire pump 26 in. draft fully loaded
Fire Boat	Coolin-Cavanaugh Bay Priest Lake		Fire boat 385 gpm pump and fire hose
Fire Boat	North of the Narrows Priest Lake		350 gpm pump 400 ft 2.5 in. hose 200 ft 1.5 in. hose 400 ft 1.4 in. wildland hose 400 ft 1 in. wildland hose

1. The local Coast Guard Auxiliary has numerous privately owned vessels that could be deployed for marine traffic control and ancillary duties but are unavailable for boom deployment. Activation is through the ICS and U.S. Coast Guard.
2. As of May, 2017, this boat is in disrepair.

Additionally, there are numerous recreational and sport fishing boats that could become available when requested.

4.7 Evacuation Considerations

Recent experience with crude oil train accidents indicates that the average time between derailment and the onset of fire is less than 20 minutes. On several occasions, the fire started immediately. Once an oil train fire starts, it is extremely difficult to extinguish and has the propensity to spread to other rail cars, the surrounding occupied facilities, and adjacent landscapes. The initial response is almost always defensive until the fire cools sufficiently to begin offensive tactics.

Preliminary Draft for Agency Review

One of the first considerations in response to oil train fires is evacuating people from the blast zone. The North American Emergency Response Guidebook recommends "initial evacuation for 800 meters (1/2 mile) in all directions" (U.S. Department of Transportation, 2016). This recommendation poses a unique problem for the cities in Bonner County because each city was developed adjacent to the rail lines; following the guidebook's recommendation, approximately half of each city would need evacuation, depending on the accident location. Additionally, the evacuation routes out of the city are all two-lane roadways, most notably the long bridge on Sandpoint's south side, which is a traffic bottleneck during high traffic flows.

A further complicating consideration is the predominance of high-occupancy facilities adjacent to the railroad tracks. Appendix E provides a series of maps showing the location of high-occupancy facilities and the rail lines. The appendix also includes the name and contact information for those facilities.

In accordance with the Bonner County Evacuation and Reception Plan, the governor of Idaho is responsible for issuing *mandatory* evacuation orders. Voluntary evacuation recommendations are made by the Bonner County Sheriff (Bonner County, 2010a), in coordination with the Bonner County Commissioners and Emergency Management. In the event of an oil train derailment, the Bonner County 9-1-1 Dispatch Center should immediately notify both the sheriff and the county commissioners; evacuation of the neighboring area should begin without delay. If resources are limited, evacuation considerations should take precedence over strategy deployment or offensive firefighting.

Due to the physical limitations of their occupants, hospitals, nursing homes, and assisted living facilities face a unique challenge in their ability to evacuate. Such facilities may need to shelter in place rather than evacuate.

Additional evacuation considerations are found in the Bonner County Evacuation and Reception Plan (Bonner County, 2010a).

4.8 Boat Ramps and Staging Areas

The Lake Pend Oreille region has at least 35 boat ramps scattered along the Clark Fork River, Pend Oreille River, and the lake itself. The boat ramps vary in quality and size. In addition, their usability is highly dependent on the lake's water level. The USACE controls flow at Albeni Falls Dam such that the pool level varies between 2,051.5 ft and 2,062.5 ft above msl. Figure 4-1 shows the pool level throughout the water year. Most boat ramps are unusable below a lake elevation of 2,056 ft; thus, water access to deploy a hazardous material spill response is severely restricted between mid-October and mid-May. The only two boat ramps that are reliably suitable for year-round response deployment are located at Priest River and Hope Basin. Response time from those sites to an accident location may be further complicated by wind, weather, and occasionally ice.

Appendix F provides a summary of the boat ramps and marinas, as well as their mapped locations. Each marina and boat ramp is further detailed in the appendix.

The current water level information is available from the National Weather Service Advance Hydrologic Prediction Service at http://water.weather.gov/ahps2/hydrograph.php?gage=hopi1&wfo=otx.

Preliminary Draft for Agency Review

4.9 Natural Gas Pipelines

TransCanada Pipeline Company operates a natural gas transmission pipeline that runs north to south in Bonner County. The pipeline generally parallels US 95 except near Sandpoint where it is located west of the city and crosses the Pend Oreille River in Dover. Figure 4-8 shows the approximate locations where the pipeline crosses a major highway or railroad track. These locations are tabulated in Table 4-7.

Table 4-7: Natural Gas Pipeline Crossings with Transportation Routes

Map Designator	GPS Coordinates	Nearest Response Strategy Location	Highway or Rail Crossing
A	48.500889, -116.446502	No nearby strategies	Close proximity to US 95 and rail lines
B	48.470561, -116.465927	No nearby strategies	Close proximity to US 95 and two rail lines
C	48.4272, -116.4923	No nearby strategies	Crosses county road NF 280 Two rail lines nearby.
D	48.344051, -116.547256	US 95 480.44 approximately 4800 ft to the north	US 95
E	48.32875, -116.558449	US95 478.53	West Bronx Rd and rail line
F	48.320165, -116.562083	US 478.53 US95 479.99	Schweitzer Mountain Rd and rail line
G	48.252148, -116.622774	US2 24.33 US2 24.89	US Highway 2 and rail line.
H	48.190075, -116.587701	No nearby strategies	US 95 and rail lines
I	48.015311, -116.655924	No nearby strategies	US 95 and rail lines

In the event of a spill in any of these areas, the pipeline company should be notified that emergency action may be needed. See the contact sheet inside the front cover.

Preliminary Draft for Agency Review

Figure 4-8: Pipeline Crossings with Highway or Railroad

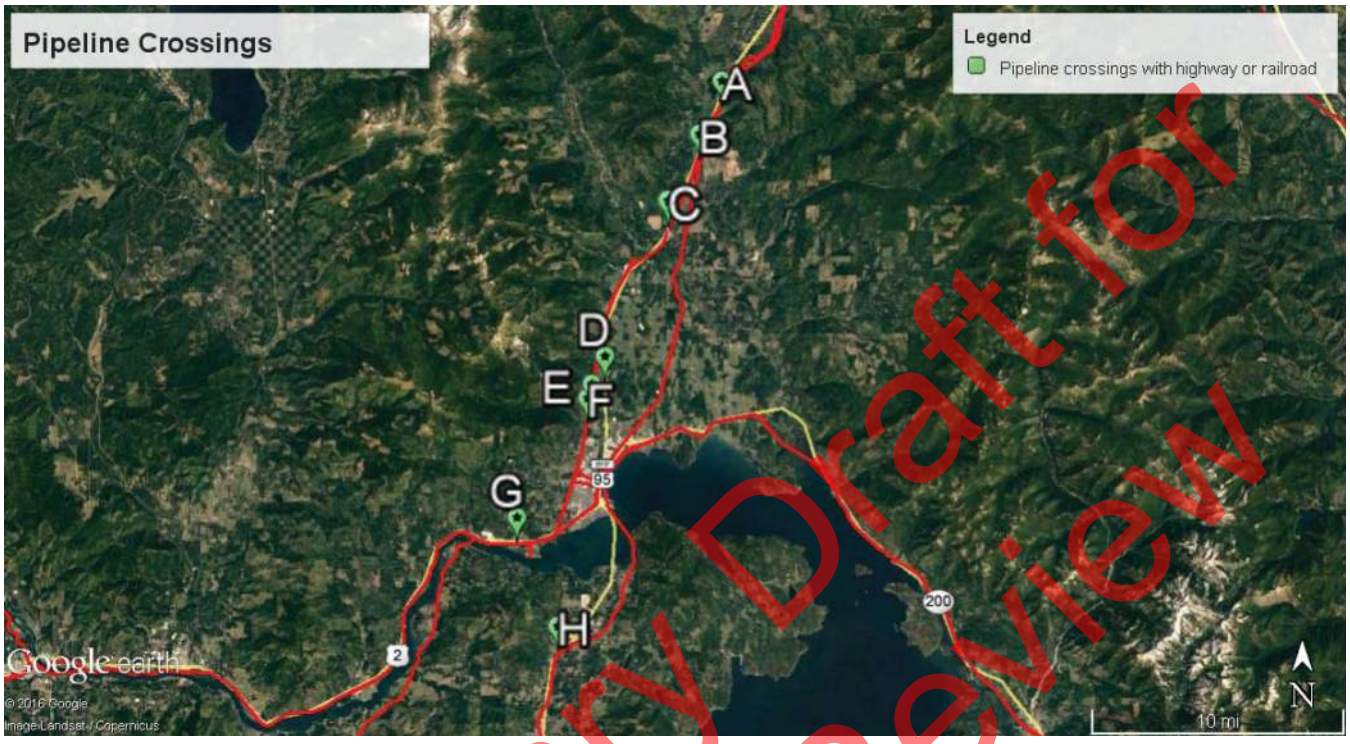

4.10 Other Geographic Response Plans—Rosetta Stone

BNSF Railway and MRL have also drafted geographic response plans for the Lake Pend Oreille region. As of June 2017, those plans differ in their completeness, scope, and, in some cases, response strategy approach. Most notably, the site identification nomenclature differs between the various GRPs. This GRP uses highway milepost numbers as the key designator to help local emergency responders. In contrast, the railroad GRPs use rail milepost numbers as their designator, and each railroad has a different milepost system.

The multiple nomenclatures could lead to confusion between emergency response teams. Appendix G correlates all of the strategies in each of the three GRPs for the Lake Pend Oreille region.

5 Shoreline Countermeasures

Shoreline countermeasures following an oil spill are a critical element in determining the ultimate environmental impact and cost resulting from a spill. Local response organizations and agencies have developed mechanisms for identifying shorelines requiring treatment, establishing treatment priorities, monitoring the effectiveness and impacts of treatment, and resolving problems as the treatment progresses.

The intended audience of this section is responders responsible for assessing and/or removing oil from shorelines.

Preliminary Draft for Agency Review

The Northwest Area Committee has developed a manual and a series of matrices as tools for shoreline countermeasure response. In addition to the following text, recent information on shoreline countermeasures can be found in the Northwest Area Shoreline Countermeasures Manual (NWACP Section 9420), available at http://www.rrt10nwac.com/NWACP/Default.aspx. Each section of the manual has been adapted to the specific environments, priorities, and treatment methods appropriate to the planning area. These elements provide the information needed to select cleanup methods for specific combinations of shoreline and oil types.

Additionally, the National Oceanic and Atmospheric Administration has developed and maintains a Shoreline Assessment Manual, which describes the Shoreline Cleanup Assessment Techniques (SCAT) process and composition, SCAT roles and responsibilities, the methods and process for conducting shoreline assessment, and how to use the results to make cleanup decisions at oil spills. More information on shoreline assessment and the manual can be obtained at http://response.restoration.noaa.gov/oil-and-chemical-spills/oil-spills/resources/shoreline-assessment-manual.html.

5.1 Pend Oreille Shoreline Types

As of 2017, shoreline-type mapping has not been completed on Lake Pend Oreille or the Pend Oreille River. Until such an effort is undertaken, a series of photographs taken in the Pend Oreille region showing example shoreline types is included. These shoreline types can be matched with the shoreline countermeasures matrix to determine appropriate cleanup response. A full list of shoreline types is provided in Table 5-1, and selected examples are provided in the photos that follow.

The following text and photos are in draft form and are intended to serve as a training tool for countermeasure contingency planning and implementation for shoreline areas in EPA Region 10. Shoreline countermeasure processes evolve to reflect increasingly efficient treatment techniques. Accordingly, the following information will be altered as new information is added.

Preliminary Draft for Agency Review

Table 5-1: Shoreline Types and Codes

Code	Lacustrine (Related to Lakes)	Riverine (Related to Rivers, Particularly Large Rivers)
1	Exposed rocky shores	Exposed rocky banks
1B	Exposed, solid human-made structures	Exposed, solid human-made structures
1C	Exposed rocky cliffs with boulder talus base	Exposed rocky cliffs with boulder talus base
2A	Shelving bedrock shores	Rocky shoals, bedrock ledges
3B	Eroding scarps in unconsolidated sediment	Exposed, eroding banks in unconsolidated sediments
4	Sand beaches	Sandy bars and gently sloping banks
5	Mixed sand and gravel beaches	Mixed sand and gravel bars and gently sloping banks
6A	Gravel beaches	Gravel bars and gently sloping banks
6B	Riprap	Riprap
7	Exposed tidal flats	N/A
8A	Sheltered scarps in bedrock, mud, or clay	N/A
8B	Sheltered, solid human-made structures	Sheltered, solid human-made structures
8C	Sheltered riprap	Sheltered riprap
8F	N/A	Vegetated, steeply sloping bluffs
9A	Sheltered sand/mud flats	N/A
9B	Vegetated low banks	Vegetated low banks
10B	Freshwater marshes	Freshwater marshes
10C	Swamps	Swamps
10D	Scrub-shrub wetlands	Scrub-shrub wetlands

Preliminary Draft for Agency Review

Photo	Description
	Shoreline Type 1: Exposed rocky banks
	Shoreline Type 1: Exposed rocky shores

Preliminary Draft for Agency Review

Shoreline Type 1B:
Exposed, solid human-made structures

Preliminary Draft for Agency Review

Shoreline Type 3B:
Exposed, eroding banks in unconsolidated sediments

Shoreline Type 5:
Mixed sand and gravel beaches

Preliminary Draft for Agency Review

Shoreline Type 5:
Mixed sand and gravel beaches

Preliminary Draft for Agency Review

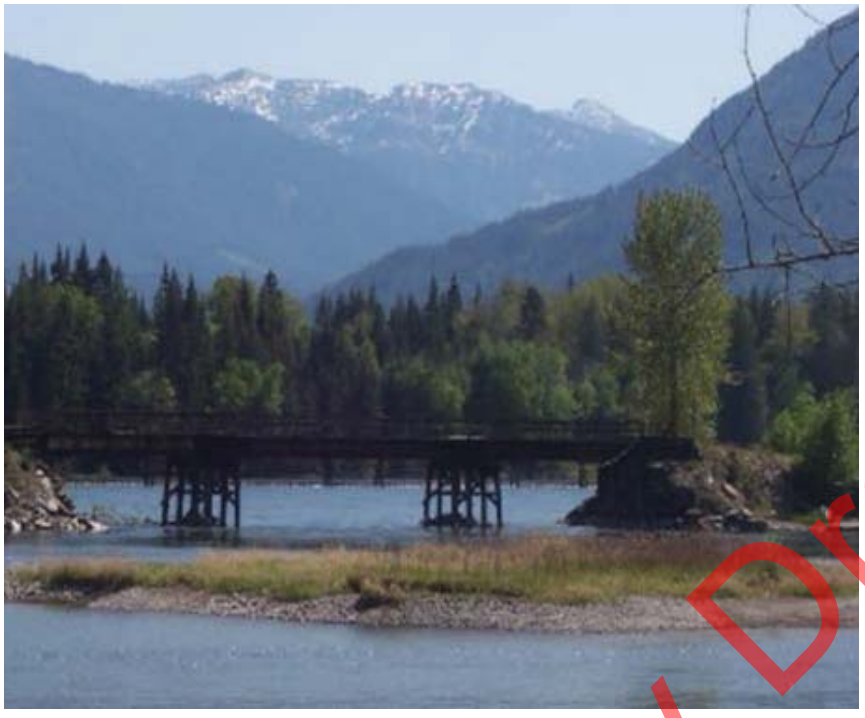

Shoreline Type 6A:
Gravel bars and gently sloping banks

Shoreline Type 6A:
Gravel bars and gently sloping banks

Preliminary Draft for Agency Review

Shoreline Type 6A:
Gravel bars and gently sloping banks

Shoreline Type 6B:
Riprap

Preliminary Draft for Agency Review

Shoreline Type 6B:

Riprap

Preliminary Draft for Agency Review

Shoreline Type 8C:
Sheltered riprap

Shoreline Type 8F:
Vegetated, steeply sloping bluff

Preliminary Draft for Agency Review

Shoreline Type 9A:
Sheltered sand/mud flats

Shoreline Type 9B:
Vegetated low banks

Preliminary Draft for Agency Review

Shoreline Type 9B:
Vegetated low banks

Preliminary Draft for Agency Review

Shoreline Type 10B:
Freshwater marshes

Preliminary Draft for Agency Review

6 Resources at Risk

The information presented in this section provides a summary of natural, cultural/historical, and economic resources at risk in the GRP coverage area and is intended to give responders enough detail to make them familiar with key resources that may need protection in the event of a spilled material release. Section 6 should not be considered a comprehensive list of natural, cultural, and economic resources in the GRP coverage area. EPA, USACE, USFS, U.S. Fish and Wildlife Service (USFWS), BLM, U.S. Bureau of Reclamation, U.S. Coast Guard, DEQ, IOEM, IDFG, Idaho Department of Water Resources, Idaho Department of Lands, Idaho Department of Health and Welfare, Kalispel Tribe, and Bonner County Emergency Management resource specialists and dam managers can provide additional information when contacted by responders.

6.1 Natural Resources

The GRP coverage area contains diverse landforms, waterbodies, and ecosystems heavily studied by a consortium of federal, state, tribal, local, and non-governmental entities. Description and manifest of each natural resource present, or potentially present, is outside the scope of this document. Additionally, natural resources, such as bull trout, westslope cutthroat trout, and seasonally migratory species, may be present in the GRP coverage area for portions of the year and absent during others.

The most ecologically productive areas on Lake Pend Oreille and Pend Oreille River are vegetated, shoreline habitats with complex morphology such as islands, marshes, and stream mouths. Notably, the Clark Fork and Pack River Deltas are considered high priority, sensitive areas to both fish and wildlife because the complex habitat that supports high biodiversity, multiple life stages, and is the funnel point for aquatic species migrating to and from the large watersheds feeding the deltas. These deltas continue to be the focus of multimillion dollar restoration efforts and furthermore provide public access for hunting, fishing, and recreation.

In the event of a spilled material release, emergency response managers are encouraged to engage biologists, entomologists, fisheries managers, and resource and technical specialists from federal, state, tribal, and county agencies to aid in determining which natural resources may be present and where, as well as which response efforts may warrant modification to increase sensitivity to a specific resource.

6.1.1 Fish Habitat Descriptions

Lake Pend Oreille contains a multitude of fish habitats. The shallow, nearshore waters most likely to be impacted by a spill provide spawning, nursery, and foraging habitats. Fisheries popular in these areas include bullhead (*Ameiurus melas*), crappie (*Pomoxis nigromaculatus*), perch (*Perca flavescens*), pumpkinseed (*Lepomis gibbosus*), largemouth bass (*Micropterus salmoides*), smallmouth bass (*Micropterus dolomieu*), and cutthroat trout provide a popular fishery. Shoreline vegetation provides shade, water quality benefits, and insect prey. Submerged wood and rocks provide shelter from predators and additional benthic

Preliminary Draft for Agency Review

invertebrates for food. Shoreline and tributary gravel beds provide spawning habitat for kokanee, an economically important sport fish and ecologically key prey base for larger species from bull trout to bald eagles.

The 26-mile-long Pend Oreille River reach is a warm blackwater reservoir from June through September and cold, flowing river from October through May. Artificially high water from dam operations has eliminated the natural vegetative cover along the shoreline, causing severe erosion and losses to quality fish habitat. The lower portions of Sand and Schweitzer Creeks are similarly affected by dam operations, channelization, and shoreline armoring. River inundation has improved habitat conditions for warmwater gamefish such as bass and crappie. Rainbow, cutthroat, brown, and bull trout use these areas seasonally when the rivers are cold and flowing.

Pelagic (open-water) habitats contain deep, cold water refugia, a large prey base including mysid shrimp and zooplankton, and migratory corridors important for genetic dispersal.

Most Pend Oreille tributaries provide cold, well-oxygenated riverine habitat preferable to native species and introduced trout. Trestle Creek, Lightning Creek, and the Pack River and tributaries are currently considered the most productive tributaries for bull trout in the GRP coverage area. The Clark Fork River, Pend Oreille River, Lake Pend Oreille, and Priest River are also federally designated critical habitat for bull trout (Figure 6-1). Late summer through fall is a particularly vulnerable time for bull trout, when adults are staging at the mouths of Johnson Creek, Lightning Creek, Trestle Creek, Strong Creek, Priest River, and the Pack River.

Cocolalla Lake contains a mixed-bag fishery including trout, crappie, sunfish, bass, catfish, suckers, and bullhead. Cocolalla Creek is known to contain brown, rainbow, and cutthroat trout along with other nongame species.

Preliminary Draft for Agency Review

Figure 6-1: Pend Oreille Sub-Area GRP Bull Trout Critical Habitat[2]

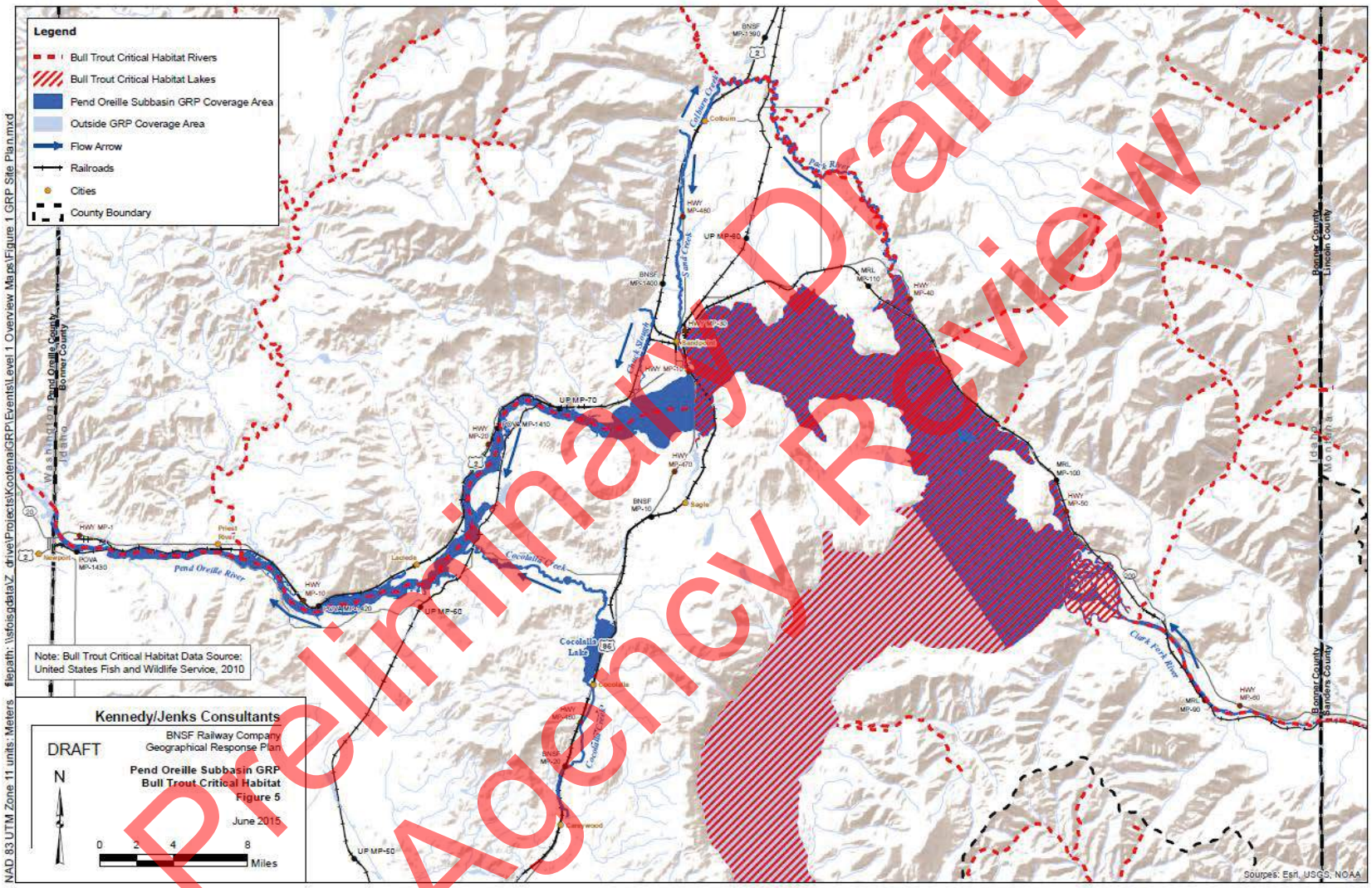

Preliminary Draft for Agency Review

[2] Figure provided courtesy of BNSF Railway Company.

6.1.2 Fish

Anglers are estimated to spend over $24,000,000 per year in Bonner County (IDFG, 2003). Fish in the GRP area are important ecological components of the region's food web and are culturally important to local tribes and residents. Native salmonids are used as indicator species of clean, cold water.

This section addresses fish resources in the following areas: Lake Pend Oreille north of Granite Creek, Sand Creek from its confluence with Lake Pend Oreille upstream to its headwaters, Schweitzer Creek from its confluence with Sand Creek to North Boyer Road, and the Pend Oreille River from its confluence with Lake Pend Oreille downstream to the Albeni Falls Dam. Information included in this document is summarized from materials listed in the reference section.

No anadromous fish species are present in the Upper Pend Oreille Sub-Area due to hydroelectric facilities blocking fish passage. Native salmonids in the Pend Oreille watershed include bull trout (*Salvelinus confluentus*), westslope cutthroat trout (*Oncorhynchus clarkii*), pygmy whitefish (*Prosopium coulterii*), and mountain whitefish (*Prosopium williamsoni*) (BPA et al., 2014). The remaining native species are several types of minnow, sculpin, and suckers. The recreational fishery includes many additional non-native species like basses, perch, and bullheads.

Four species in the Pend Oreille system are actively managed by IDFG. These fish species consist of westslope cutthroat trout, rainbow trout, kokanee, and bull trout. These species represent sensitive salmonid species with significant research and management focus and are discussed further below.

6.1.2.1 Endangered Species Act (ESA)-Listed Fish Species

The USFWS identifies federally threatened, endangered, and candidate species that are important for protection because of their greater possibility of extinction. Specific Endangered Species Act-listed fish species are identified in Table 6-1.

Table 6-1: Federally Listed ESA Fish Species within the GRP Coverage Area

Common Name	Scientific Name	ESA Status
Bull Trout	*Salvelinus confluentus*	Threatened

(USFWS, 2015a)

6.1.2.2 Westslope Cutthroat Trout

Westslope cutthroat trout (*Oncorhynchus clarki)* are abundant throughout the Upper Pend Oreille Sub-Area. The westslope cutthroat trout is a federal species of special concern. Cutthroat trout found in Lake Pend Oreille are adfluvial, which means they reside in the lake environment after maturity but migrate to tributary streams to spawn. The young remain in streams for 2 to 5 years then return to the lake. Spawning takes place in the spring from April to May in small tributary streams. Redds are developed in gravel and spawning occurs during the

Preliminary Draft for Agency Review

day or night. Fry emerge from the gravel in June and July. Juvenile westslope cutthroat mature between 4 and 7 years of age. Juvenile cutthroat trout rear in their native stream. As the fish mature, some will migrate to the Lake Pend Oreille (adfluvial) or stay near their natal stream (resident). Cutthroat in Lake Pend Oreille are believed to use shoreline habitat rather than open, deep water habitat where large, predatory bull trout and lake trout occur. Cutthroat trout will be most sensitive to spill risk during the spring (April to early June) when upstream migration to headwater spawning streams may be blocked.

6.1.2.3 Rainbow Trout

Although rainbow trout (*Oncorhynchus mykiss)* are native to Idaho and common to many of the state's streams and lakes, they are not native to the Pend Oreille system (IDFG, 2013). Rainbow trout in the GRP coverage area are hatchery origin fish. Rainbow trout spawn in streams from mid-April to late June. They use areas of gravel or cobble, depending on the size of the fish. The eggs hatch in early to mid-summer. Young fish may live in the stream a few months, several years, or their entire life. When they mature and are ready to spawn, they migrate back to where they were born. Most rainbow trout require 3 to 5 years to mature. Rainbow trout eat insects and zooplankton in the water or on the surface. They will also feed on small fish and fish eggs.

6.1.2.4 Kokanee

Kokanee (*Onchorhynchus nerka*), the landlocked variant of sockeye salmon, are found in large, deep lakes and reservoirs across Idaho, including Lake Pend Oreille. Kokanee provide a major recreational fishery on Lake Pend Oreille and provide a food base for larger species from bull trout to bald eagle. Eggs are laid in gravel low in the tributaries or along the nearshore in gravel beds. Given these spawning habitat preferences, kokanee have a high risk of being affected by a spill during spawning and incubation periods, September through June. Kokanee spawn in tributary streams or along the shore of the lake. Migration to streams takes place from September through December, where kokanee dig redds similar to other salmonids and die after spawning. Kokanee that remain in the lake spawn on the rocky bottom of the lake. In early spring, fry emerge from the gravel, with those emerging in tributary streams moving downstream to Lake Pend Oreille at night. Juvenile kokanee prefer habitat in the middle of the lake rather than near shoreline habitat. Kokanee feed primarily on zooplankton and occasionally eat aquatic insects. During the summer, they prefer deep water habitat in the lake until dusk.

6.1.2.5 Bull Trout

Bull trout (*Salvelinus confluentus*) are currently listed as a federal threatened species under the ESA. Native to Idaho, bull trout occur in most of the mountain creeks, rivers, and lakes of the Upper Pend Oreille Sub-Area. Most of the waterbodies within the GRP coverage area are designated as critical habitat for bull trout under the ESA (Figure 6-1). Although they are widely distributed, bull trout are not abundant. The USFWS Bull Trout Recovery Plan (USFWS, 2015c) identifies Lake Pend Oreille as a primary core area for bull trout recovery. Adult upstream migration of bull trout takes place in the fall. Bull trout typically spawn between September and late December, with the peak spawning occurring in October in streams with cool water and

Preliminary Draft for Agency Review

good gravel. After spawning, adults move into lakes or deeper pools to rest. The eggs hatch in the winter and the small fish live in the gravel until early spring. The juveniles may remain in the stream or migrate back to Lake Pend Oreille. Juvenile bull trout feed on aquatic insects.

Once in the lake, the fish sexually mature within 4 to 6 years. Adults are predatory, eating primarily the fish eggs of other fish. Adult bull trout may spawn several times during their lives, but may not spawn each year. Bull trout are primarily threatened by habitat degradation and fragmentation, blockage of migratory corridors, poor water quality, the effects of climate change, and past fisheries management practices, including the introduction of nonnative species, such as brown, lake, and brook trout (USFWS, 2014).

6.1.3 Avian and Terrestrial Species

Within the GRP coverage area, sightings or known distributions of ESA-listed species or Idaho's species of greatest conservation need consist of North American wolverine, Canada lynx, southern Selkirk Mountain woodland caribou, and grizzly bear. Of these listed species, none are associated with Lake Pend Oreille year round.

6.1.3.1 ESA-Listed Terrestrial Species

The USFWS identifies federally threatened, endangered, and candidate species that are important for protection because of their greater possibility of extinction. ESA-listed terrestrial species in the GRP coverage area are listed in Table 6-2.

Table 6-2: Federally Listed ESA Avian and Terrestrial Species within the GRP Coverage Area

Common Name	Scientific Name	ESA Status
Canada lynx	*Lynx canadensis*	Threatened
Grizzly bear	*Ursus arctos horribilis*	Threatened
Southern Selkirk Mountains woodland caribou	*Rangifer tarandus caribou*	Endangered
North American wolverine	*Gulo gulo luscus*	Proposed threatened

(USFWS, 2015a)

The lynx, grizzly bear, caribou, and wolf may be present in the northern reaches of Bonner County, but sightings adjacent to the transportation corridors of Lake Pend Oreille or the Pend Oreille River are highly unusual. Bald eagle sightings are common throughout the GRP coverage area.

6.1.3.2 Bald Eagle

Historically, bald eagles occurred throughout the United State in large numbers. Bald eagles were once listed as endangered. Species recovery has been tracked through breeding-pair surveys, nest monitoring, and winter roost surveys. In Idaho surveys, a recovery zone in the vicinity of the Pend Oreille River and Lake Pend Oreille has shown that populations of bald eagles have increased in recent years (IDFG, 2017).

Preliminary Draft for Agency Review

The Lake Pend Oreille basin is part of Eagle Recovery Zone 7, which includes the panhandle of Idaho. In 1996, a statewide nesting survey found eight nesting territories in the vicinity of Lake Pend Oreille and the Pend Oreille River. Four nesting territories located around Lake Pend Oreille include Fisherman Island, Eaton Lake, Warren Island, and Oden Bay. Nesting territories identified along the Pend Oreille River include Cocolalla Slough, Morton Slough, Springy Point, and Sheepherder Point. Seven of these nests were identified as occupied, and five were identified as successful in incubating eggs and fledging young.

Nests are located in the uppermost crotch of tall trees. Bald eagles incubate eggs for 45 days, and in about 8 weeks, young fledge from the nest. Eagles often migrate in the winter and roost and hunt in groups along waterways that have abundant food supplies, such as Lake Pend Oreille. Annually, large numbers of bald eagles migrate to Lake Pend Oreille to feed on spawned-out kokanee and waterfowl. The continued protection of bald eagle nesting areas and wintering habitat will allow for the continued recovery of bald eagle populations throughout Idaho, as well as the rest of the United States.

6.1.3.3 Canada Lynx

The Canada lynx is an ESA-listed threatened species and is on the Idaho list of species of greatest conservation need. Trapping and other data identify the lynx as occurring in Ferry, Pend Oreille, and Stevens Counties in Washington (Stinson, 2001). The lynx is also present in Idaho's Kootenai and Benewah Counties (IDFG, 2001) and is known to be present in the Selkirk and Cabinet mountain ranges and are known to migrate across the rail and highway corridors in Bonner County (personal communication from Kira Santari, IDFG).

The Canada lynx is closely associated with high-elevation forests, especially those dominated by lodge pole pine, subalpine fir, or Engelmann spruce (NPCC, 2005a). The lynx's key ecological function is consumer (predator) of herbivorous vertebrates, primarily snowshoe hare (NPCC, 2005a).

The Pend Oreille, San Poil, and Upper Columbia Subbasins overlap at least one of the six Lynx Management Zones (LMZs) or subsequent Lynx Analysis Units established by the Washington Department of Fish and Wildlife (Stinson, 2001). Even though LMZs do not encompass all areas potentially used by lynx, habitat management within these zones is expected to hold the greatest promise for supporting lynx populations (NPCC, 2005a).

Canada lynx habitat was not directly affected by construction of the Federal Columbia River Power System projects in the IMP. Indirect effects of the projects that have affected high-elevation forests include increased timber harvest, road development, and increased hunting and recreation pressure (NPCC, 2005a).

Lynx are affected by 1) prey availability—especially snowshoe hare—that is influenced by cyclic populations and habitat loss from timber harvest or insect infestation; 2) road development, which facilitates other carnivores and humans to reach formerly remote areas during winter; and 3) susceptibility to trapping, especially for kittens and yearlings (NPCC, 2005a).

Preliminary Draft for Agency Review

6.1.3.4 Grizzly Bear

The grizzly bear is ESA-listed as threatened and is an Idaho species of greatest conservation need. Its historical range in North America extended from the mid-plains westward to the California coast and included the states of Idaho and Washington (NPCC, 2005a).

Currently, the grizzly is known to reside in the Selkirk and Cabinet-Yaak ecosystem (IGBC, 2017). Most of the Pend Oreille Subbasin is within the Selkirk Recovery Zone, and it also borders the Cabinet/Yaak Recovery Zone (NPCC, 2005a).

Federal recovery efforts in the Selkirk Recovery Zone include 1) population monitoring; 2) coordinated protection enforcement; 3) selective pest control; 4) reduction in human disturbance or habitat loss from timbering, livestock grazing, energy/mineral development, recreation, or land use zoning; and 5) public awareness. The primary limiting factors for grizzly bear recovery are accidental or purposeful human-caused mortality and loss of remaining habitat (NPCC, 2005a).

The grizzly provides at least six key ecological functions: 1) consumer or predator of herbivorous vertebrates, 2) consumer of carrion, 3) creator of large burrows used by other wildlife, 4) controller of terrestrial vertebrate populations via predation or displacement, 5) disperser of seeds/fruits via ingestion or caching, and 6) creator of feeding opportunities for other carnivores or scavengers. The bear has a strong and consistent relationship (direct consumer at specific stages in its life history or at specific seasons) with the spawning and carcass stages of salmonid life history (IBIS, 2003).

6.1.3.5 Woodland Caribou

The woodland caribou is listed as endangered by the federal government and is an Idaho species of greatest conservation need. Prior to 1900, this animal was distributed throughout much of Canada and the northern conterminous United States (NPCC, 2005a). The species occurred in Idaho as far south as the Salmon River (Evans, 1960). Presently, the last remaining woodland caribou population in the United States is restricted to the Selkirk Mountains of northeastern Washington, northern Idaho, and southeastern British Columbia (NPCC, 2005a). Though Southern Selkirk Mountains woodland caribou critical habitat does not include the GRP coverage area, U.S. counties in which the woodland caribou, Selkirk Mountain population, is known to or is believed to occur include Bonner County (USFWS, 2015b) but is not believed to occur near major transportation corridors.

The Southern Selkirk Mountains woodland caribou subpopulation was augmented between 1996 and 1998 with 43 caribou from British Columbia placed into Washington and immediately north of the border (Almack, 2001). Caribou recovery efforts are focused on maintaining two existing herds in the Selkirk ecosystem, establishing a third herd in Washington, and managing at least 443,000 acres of suitable and potential habitat (USFWS, 1993b). Managing human access, educating hunters, enforcing protective laws, and augmenting the population are also planned (NPCC, 2005a).

Preliminary Draft for Agency Review

The caribou has a general association with wetland, riparian, and upland forest habitats, especially mature or old trees with abundant lichens, and provides at least four key ecological functions: 1) consumer of grasses, forbs, and woody leaves; 2) transporter of viable seeds, spores, plants, or animals; 3) disperser of lichens; and 4) creator of woody debris fragments (NPCC, 2005a).

Factors that limit caribou recovery are 1) excessive mortality—particularly for calves during their first few months—due to weather, predation, abandonment, poaching via road access, or accidents and 2) habitat fragmentation or loss, especially the continued availability of arboreal lichens (NPCC, 2005a).

6.1.3.6 Other Species of Interest

Though not ESA-listed within the GRP coverage area, the following terrestrial species may be of interest, either due to being ESA-listed in areas surrounding the GRP coverage area, recently de-listed, or having ecological, cultural, and/or recreational importance to the GRP coverage area itself.

Waterfowl are considered a flagship species in the GRP area. The waterfowl use of the GRP area typically peaks in November and December. Waterfowl numbers have been as high as 60,000 ducks, 15,000 Canada geese, and 2,000 tundra swans. Sites that typically support thousands of waterfowl during migration in the spring and fall include Morton Slough, Oden Bay, the Pack River Delta, Denton Slough, and the Clark Fork River Delta.

Waterfowl are important game and cultural species and are closely tied to emergent wetlands and open water habitats in Lake Pend Oreille and the Pend Oreille River. Approximately 40 species of waterfowl are associated with these waterbodies. Over 30 species of greatest conservation need have been identified in the Okanogan Highlands Ecological Section, which includes the GRP coverage area. Loons, grebes, cormorants, mergansers, ducks, geese, and tundra swans are among the many migratory waterfowl that are common within the Upper Pend Oreille Sub-Area.

The northern Idaho ground squirrel (*Spermophilis brunneus brunneus*) and the yellow-billed cuckoo (*Coccyzus americanus*) are federally listed as threatened in Idaho but are not known to occur within the GRP coverage area (USFWS, 2015b).

Other species of interest include the pygmy rabbit (*Brachylagus idahoensis*), American white pelican (*Pelecanusery throrhynchos*), ferruginous hawk (*Buteo regalis*), fisher (*Martes pennanti*), northern leopard frog (*Rana pipiens*), peregrine falcon (*Falco peregrines*), sage grouse (*Centrocercus urophasianus*), sandhill crane (*Grus canadensis tabida*), Columbian sharp-tailed grouse (*Tympanuchus phasianellus columbianus*), and upland sandpiper (*Bartramia longicauda*) (Kennedy/Jenks, 2015).

Big game may be present in the GRP coverage area, particularly in the Wildlife Management Areas (WMAs) and agricultural fields. White-tailed deer, moose, elk, black bear, and mountain lion are highly valued by hunters and prioritized for management by IDFG biologists. Furbearers

Preliminary Draft for Agency Review

including beaver, muskrat, river otter, bobcats, and raccoons are likely to utilize wetland habitats in the GRP coverage area.

6.1.3.7 Species most likely to be effected by a spill

The species of greatest conservation need most likely to be affected by a spill (based on habitat preferences) include the following aquatic, semi-aquatic, and riparian associated species: western toad, northern leopard frog, harlequin duck, common loon, western grebe, American bittern, black tern, olive-sided flycatcher, western pearlshell mussel, California floater, ridged mussel, and a mayfly (*Ephemeralla alleni*).

6.1.4 Wildlife Management and Protected Habitat Areas

6.1.4.1 Pend Oreille Wildlife Management Area

The Pend Oreille WMA is managed by IDFG and includes numerous sub-parcels scattered throughout the GRP coverage area. Figure 6-2 shows the approximate location of lands within the GRP coverage area that are managed by IDFG. IDFG manages approximately 6,000 acres along Lake Pend Oreille, the Pend Oreille River, the lower Pack River and the Clark Fork River. The majority of the sub-parcels have surface water connectivity to the GRP coverage area waterbodies.

The Pend Oreille WMA supports migrating and wintering waterfowl in large numbers. Tundra swans, Canada geese, American widgeon, redheads, mallards, common mergansers, common goldeneye, bufflehead, and ring-necked ducks are common. Areas of particular interest include Denton Slough for western grebe courtship displays and the Clark Fork River Delta for common loon watching (IDFG, 2015a).

Preliminary Draft for Agency Review

Figure 6-2: Fish and Game Managed Lands, Bonner County

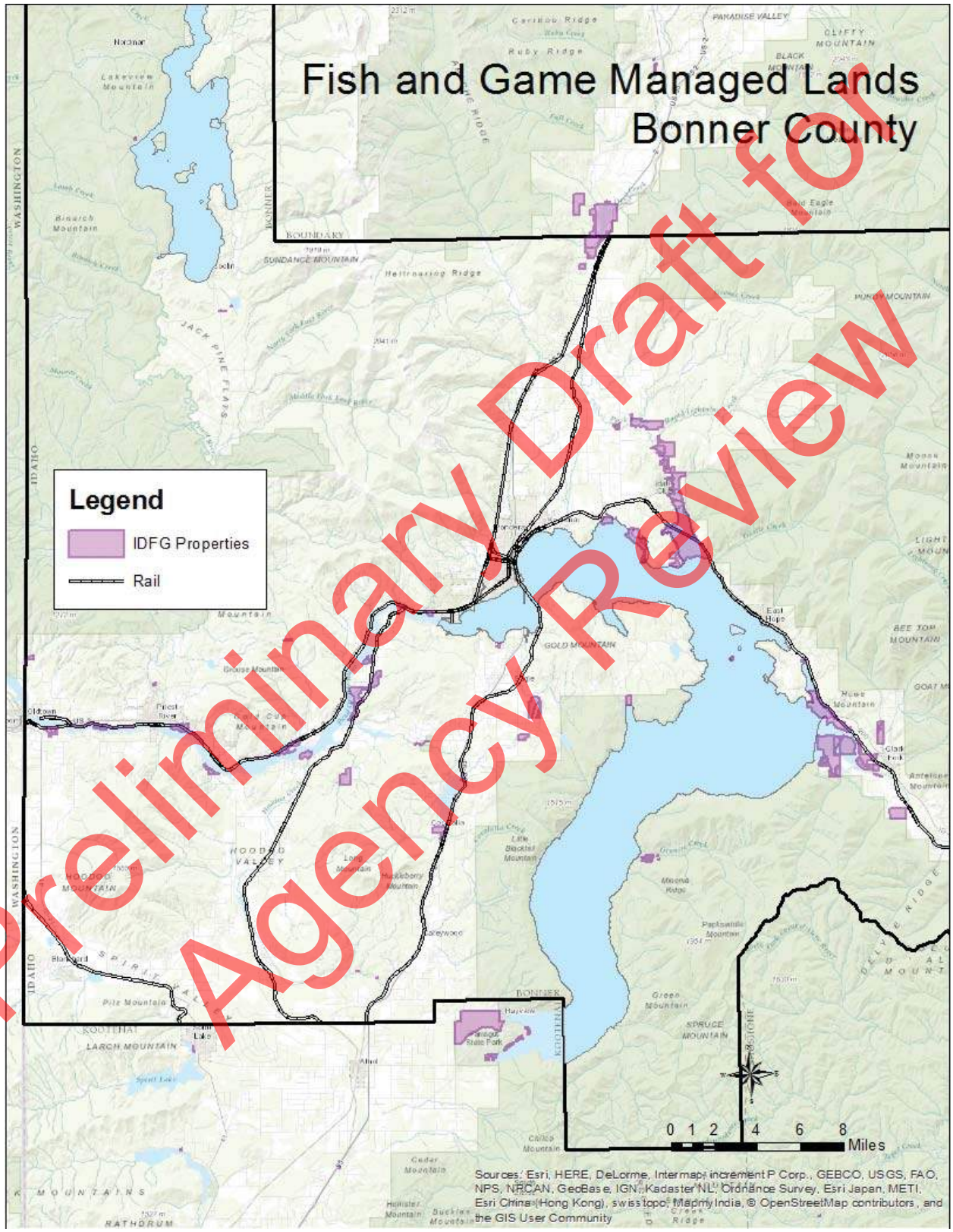

Preliminary Draft for Agency Review

6.1.4.2 National Wildlife Refuges

No national wildlife refuges are present within the GRP coverage area.

6.1.4.3 Albeni Falls Wildlife Mitigation Project

The Albeni Falls Wildlife Mitigation Project was developed to protect, enhance, and maintain the long-term quality of wetland and riparian wildlife habitat in the Lake Pend Oreille vicinity as ongoing mitigation for construction of Albeni Falls Dam. The long-term conservation potential for the project is primarily protecting existing high-quality wetland habitat but also includes protecting habitat with high restoration potential (NPCC, 2005a).

Albeni Falls Interagency Work Group members include the IDFG, Coeur d'Alene Tribe, Kalispel Tribe of Indians, Kootenai Tribe of Idaho, USFWS, USACE, Natural Resources Conservation Services, and USFS. The work group established priority mitigation focus areas by considering in-place/in-kind opportunities, the threat to wetland plant communities in the primary areas of impact, juxtaposition to other management areas, and availability of protection opportunities. The work group implements the Albeni Falls Wildlife Mitigation Project by way of formal agreement and implements projects in the Upper Pend Oreille, Lower Pend Oreille, Priest River, Kootenai, and Coeur d'Alene subbasins (NPCC, 2005a).

Using Bonneville Power Administration (BPA) funds, the IDFG, in coordination with the work group, developed the Albeni Falls Wildlife Protection, Mitigation, and Enhancement Plan (Martin et al., 1988). The plan not only identifies the wildlife habitat benefits and impacts associated with the construction and operation of Albeni Falls Dam, but it also identifies potential areas to mitigate wildlife habitat losses. The BPA completed the Albeni Falls Wildlife Management Plan Environmental Assessment in 1996 (BPA, 1996). The plan is a programmatic guide to developing wildlife mitigation projects in the Upper Pend Oreille, Lower Pend Oreille, Priest River, Kootenai, and Coeur d'Alene subbasins (NPCC, 2005a).

6.1.4.4 Pack River Delta Restoration

The Pack River Delta is a unique wetland feature feeding into the north shore of Lake Pend Oreille. The Ducks Unlimited organization has been instrumental in coordinating its restoration. The following information was obtained from their website (Ducks Unlimited, 2017):

> The Pack River is the second largest tributary to Lake Pend Oreille and drains more than 185,000 acres into what was once a large and diverse mosaic of forested islands, oxbow lakes, lush wetlands and braided river channels. The hope is that lessons learned from the Pack River project can be applied to restore the larger Clark Fork River delta. The Clark Fork River is the lake's largest tributary.
>
> With the construction of Albeni Falls dam in 1955, much of the nearly 1,444-acre Pack River delta became submerged under several feet of water for much of the summer, dramatically changing the environment in the lower delta. In total, it is estimated that the construction of the dam resulted in the loss of 6,617 acres of wetland habitat and the inundation of 8,900 acres of deep-water marsh on the lake, impacting many resident and migrating birds, particularly waterfowl. One of the hardest hit was the wintering redhead duck population, which numbers in the tens of thousands.
>
> The goal of the restoration project was to increase the height and stability of a portion of the summertime submerged islands to improve their ability to support high-value habitat for numerous species of

Preliminary Draft for Agency Review

waterfowl and wildlife year-round. The first step was to reconstruct the islands and other physical features that once supported a system of intertwined wetlands and riparian habitats. This required moving large quantities of soil within the delta using excavators and dump trucks in sometimes challenging conditions.

Some of the native vegetation that once occupied these sites was then replanted in the form of seeds, plugs and cuttings. Emergent aquatic vegetation such as cattail and bulrush were planted along the island shorelines, while the islands were planted with thousands of willow, cottonwood, western red cedar and red-osier dogwood. To encourage settling of river sediments in the project area, some side channels were plugged with logs and stumps to replicate this important physical process. In time, this may cause the constructed islands to expand in size and additional islands to form naturally.

The project took place on lands owned by USACE and managed by IDFG. The project was completed in 2009. The lessons learned from the Pack River project were applied to restore the larger Clark Fork River Delta.

6.1.4.5 IDFG Clark Fork River Delta Restoration Project

The Clark Fork River is the principal tributary to Lake Pend Oreille, and the Clark Fork River Delta is the largest area of contiguous wetland complex in the Pend Oreille system. The delta forms where the Clark Fork River enters Lake Pend Oreille, about 3 miles west of Clark Fork, Idaho. The delta extends roughly 4 miles downriver from the town of Clark Fork and is approximately 3 miles wide where the delta meets the lake. About 80% of all water entering Lake Pend Oreille is from the Clark Fork River (Clark Fork Delta Restoration Project, 2016).

Shoreline erosion of the delta began with the operation of Albeni Falls Dam downstream and the two upstream dams at Cabinet Gorge and Noxon Rapids.

In conjunction with many partners and funding sources, IDFG began installing shoreline erosion control measures, installing structures to redirect local water flow, raising islands, deepening channels, establishing vegetation, and controlling weeds at the Clark Fork River Delta. The restoration is ongoing and is expected to reduce rates of erosion, reclaim wetland habitats, and improve habitat quality for fish, wildlife, and vegetation (BPA et al., 2014). Project work locations are indicated on Figure 6-3.

Additional discussion regarding the wetland qualities of the Clark Fork Delta are provided in Section 6.1.5.2 below.

Preliminary Draft for Agency Review

Figure 6-3: Clark Fork Delta Restoration Project Areas

6.1.5 Wetlands

The Lake Pend Oreille region has numerous wetlands that provide critical habitat to many residential and migratory species. In addition, wetlands help maintain groundwater and stream flows, store flood runoff, and nurture and sustain critical ecosystems. Wetlands are highly prized by the citizens of Idaho for their inherent habitat value as well as their recreational opportunities.

In 2005, IDFG conducted a detailed assessment of the state's wetlands. The assessment evaluated the wetland type, function and value, and threat from various pollutants and human activities. The study produced a ranking of Idaho's wetlands. Ten of the over 200 wetlands evaluated are located in the Lake Pend Oreille region, and three of those were ranked in the state's top 10 wetlands (IDFG, 2005).

Figure 6-4 and Table 6-3 describe many of the wetlands in the Lake Pend Oreille region. The following paragraphs, extracted from the 2005 report, describe two of the key Lake Pend Oreille region's wetlands.

6.1.5.1 Hoodoo Lakes / Lambertson Lake / Kelso Lake

This wetland is located in the zone of glacial moraine deposits between the trench of Lake Pend Oreille and the outwash plains of the Rathdrum Prairie. This extensive chain of wetlands is situated in a landscape managed primarily for timber and hay production, along with extensive agricultural lands and roads. Wetlands are associated with glacial kettles, including at least six lakes, broad sedge and rush meadows (some of which are hayed), and streamside riparian

Preliminary Draft for Agency Review

areas. Although the hydrology of the wetland is altered by drainage, forested swamps and extensive peatlands are still present. These wetlands support 14 rare species, including one of only a few bristly sedge occurrences in Idaho (at Hoodoo Lake), six rare communities, and seven ecological systems. Within the site, Lambertson Lake, a kettle lake, has the most extensive peatland and well-developed aquatic communities. Beaver, Round[3], Granite, and Kelso Lakes are also included in the site because of their hydrologic connectivity and the presence of fen communities surrounding the lakes. The area has many recreational opportunities.

6.1.5.2 Clark Fork River Delta

The Clark Fork River forms a delta where it enters Lake Pend Oreille in a broad valley at the south end of the Cabinet Mountains and north end of the Coeur d'Alene Mountains. The numerous islands support mature western red cedar and grand fir forest, black cottonwood bottomland forest, willow and red-osier dogwood riparian shrub lands, and wet meadows. The wettest areas are dominated by marsh, while reed canarygrass (an invasive species) dominates many meadows, particularly when water levels have been manipulated. The wetlands support 15 rare species, 3 rare plant communities, and 6 ecological systems. Large numbers of migrating and wintering waterfowl (counts as high as 60,000 ducks [including 20,000 redheads], 15,000 Canada geese, and 2,000 tundra swans, as well as numerous grebe species and loons) utilize this area. Lake Pend Oreille is an important wintering area for bald eagles migrating south from Canada, with over 300 present in the delta by early December. Lake Pend Oreille is also an important nesting area for ospreys, with the greatest densities occurring in the Clark Fork River Delta. There is a high concentration of colonial nesting birds. Globally rare plant species are supported. The area has very high recreation opportunities. Agriculture as well as roads and water quality impairments are prevalent.

Preliminary Draft for Agency Review

[3] This Round lake is just east of Kelso Lake and should not be confused with Round Lake State Park which is located about 11 miles north-north east.

Figure 6-4: Priority Wetland Areas in the Lake Pend Oreille Region

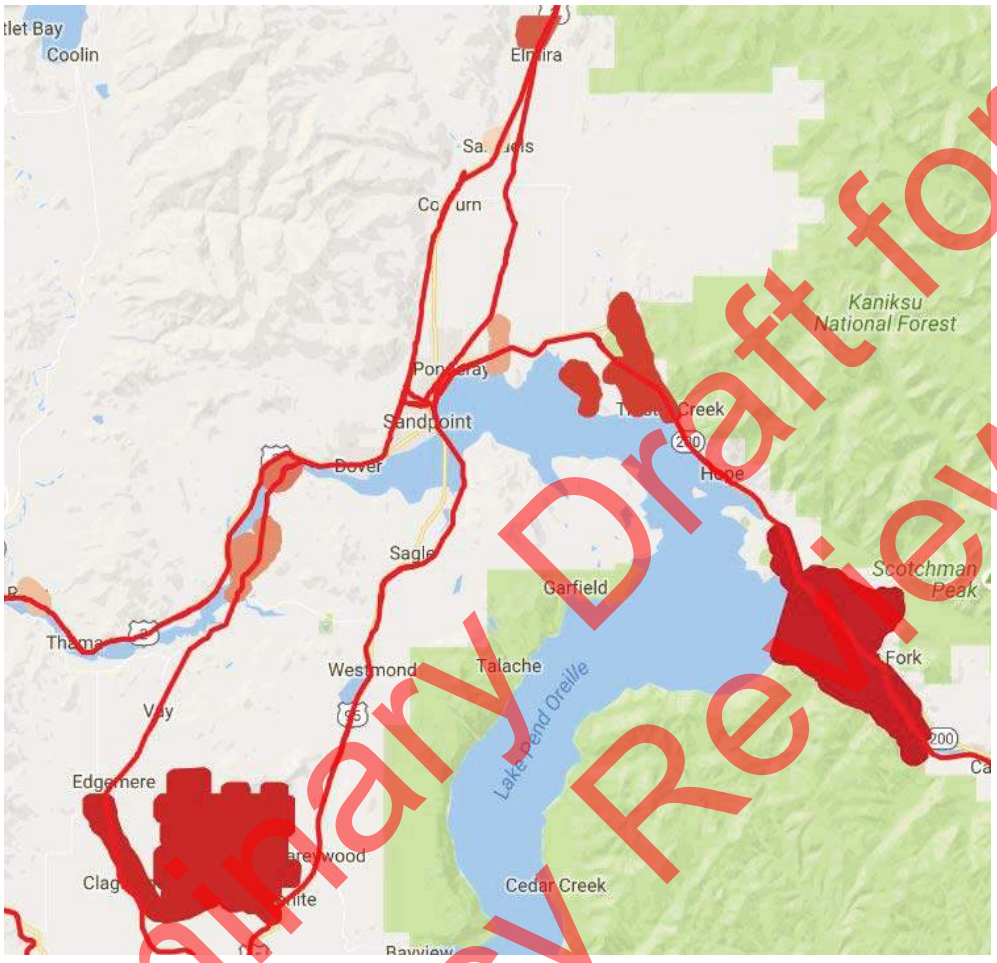

Preliminary Draft for Agency Review

Table 6-3: Significant Wetlands in the Lake Pend Oreille Region

Wetland	General Location	Latitude	Longitude	Nearest Strategy Location
Clark Fork River Delta	Northwest of Clark Fork city	48.147750°	-116.189944°	See Section 4.3.1
Hoodoo Lake / Lambertson Lake / Kelso Lake Wetlands	North of SR 54, West of US 95	48.039325°	-116.749796°	None
Pack River	SR 200, 9 miles east of Sandpoint	48.301086°	-116.370692°	SR200 38.69 SR200 40.78
McArthur Lake	US 95, 13 miles north of Sandpoint	48.493628°	-116.463793°	None
Muskrat Lake	South side of Pend Oreille river, near UP Railroad bridge	48.247045°	-116.674878°	None
Morton Slough	South side of Pend Oreille River, northeast of Laclede	48.199635°	-116.698657°	US2 17.12
Boyer Slough	North shore of Lake Pend Oreille, 4 miles Northeast of Sandpoint	48.314240°	-116.491722°	SR200 33.15
Keyser's Slough	East of Priest River and Pend Oreille River confluence	48.177593°	-116.880588°	US2 7.59
Walsh Lake	West side of US 95, 9 miles north of Sandpoint	48.431866°	-116.496188°	None
Colburn Creek	West side of US 95, 8.2 miles north of Sandpoint	48.397705°	-116.536237°	US95 484.17
Cocolalla Lake	South end of Cocolalla Lake adjacent to BNSF line	48.1065°	-116.619°	US95 461.32

Preliminary Draft for Agency Review

6.1.6 Rathdrum Prairie Aquifer

The Rathdrum Prairie Aquifer (RPA) is a deposit largely made up of sand, gravel, cobbles, and boulders. The RPA covers an area of approximately 211 square miles in Idaho and extends from the southern tip of Lake Pend Oreille south to Coeur d'Alene and Post Falls and then west to the Idaho-Washington border. The aquifer extends into Washington and becomes part of the larger

Spokane Valley-Rathdrum Prairie Aquifer. As shown in Figure 6-5, the northern area of the aquifer lies at the southern end of Bonner County.

Water recharges the RPA through precipitation, runoff from the surrounding upland areas, and leakage from surrounding lakes, most notably, Lake Pend Oreille and Spirit Lake. The water table is at an elevation of about 2,060 ft above msl near Lake Pend Oreille and about 1,980 ft above msl at the Idaho-Washington state line.

The larger Spokane Valley-Rathdrum Prairie Aquifer supplies drinking water to approximately 100,000 people in Kootenai County, Idaho, and another 400,000 people in Spokane County, Washington.

DEQ has classified the RPA as a sensitive resource aquifer. Because of this classification, all activities that could impact the water quality of the RPA must be carried out so they maintain or improve existing quality of the groundwater. Additionally, EPA classifies the Spokane Valley-Rathdrum Prairie Aquifer as a “sole-source aquifer” (Stevens et al., 2015).

Although this GRP document focuses attention on response to hazardous material spills to surface waters, one must not forget the critical importance of protecting the Spokane Valley-Rathdrum Prairie aquifer. Remediating an oil spill to an underground resource can be significantly more complex than remediating above-ground contamination.

Preliminary Draft for Agency Review

Figure 6-5: Rathdrum Prairie Aquifer

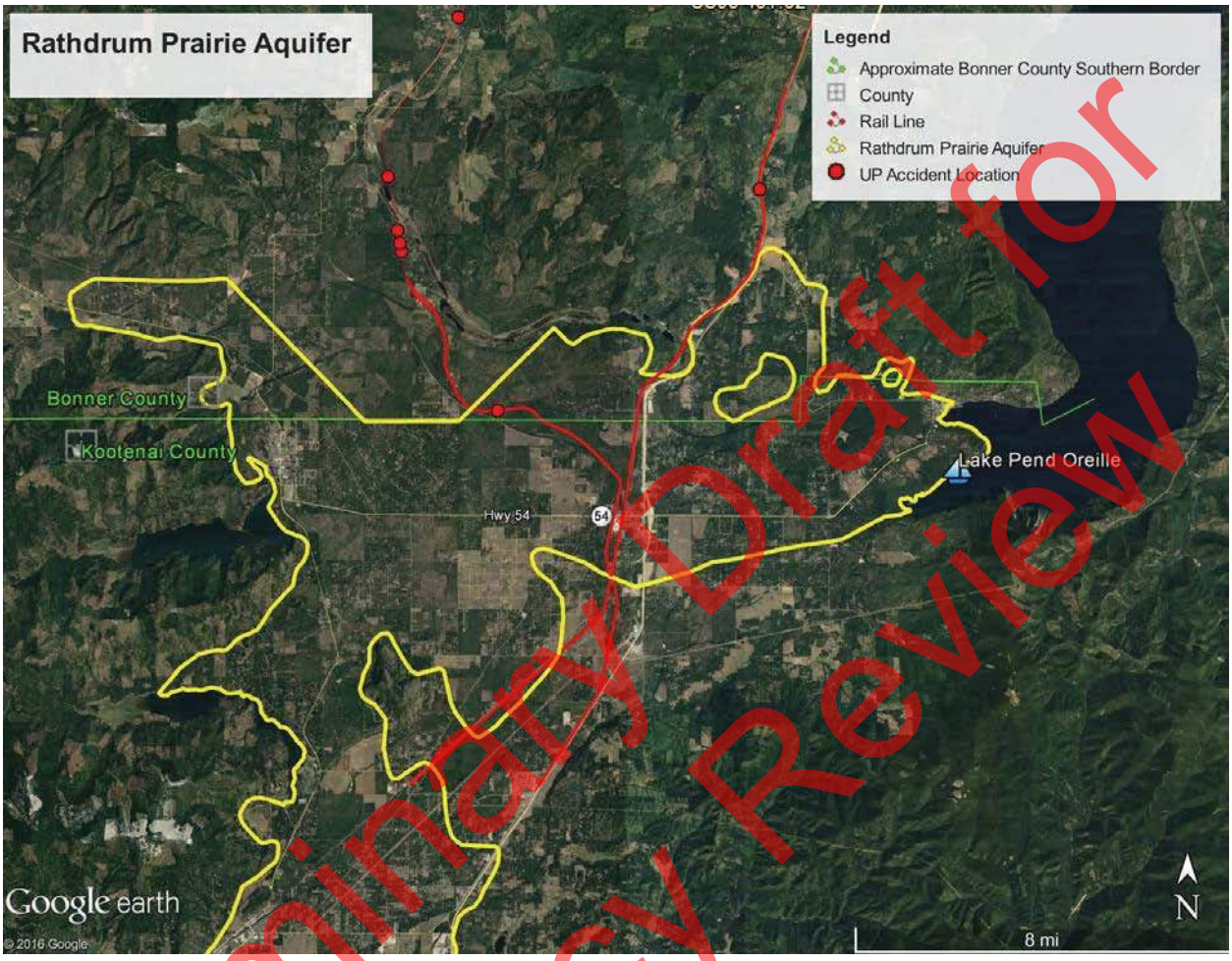

6.2 Cultural/Historical Resources

Research indicates humans have inhabited areas adjacent to the lower Clark Fork River for more than 7,000 years. Artifacts and evidence remaining on the shorelines provide a wealth of information about early inhabitants from Native American and prehistoric times to early-day fur trading and development of transportation (Avista Utilities, 2011).

Multiple federal, state, and tribal agencies, as well as non-governmental entities, support identification and protection of cultural resources within the GRP coverage area. Entities such as the National Register of Historic Places, SHPO, and USGS Geographic Names Information System have developed and/or provide resources such as cultural resources surveys, which can be used as an early indication of the presence or absence of listed cultural resources in or near a spill location. At this time, it is not known how many sites of historic or cultural importance exist in the Lake Pend Oreille and Pend Oreille River system (NWAC, 2005). This document does not locate sites specifically. However, due to fluctuating lake levels, there are known seasonal differences in sensitivity to cultural resources in the GRP coverage area.

Preliminary Draft for Agency Review

To address the potential presence of cultural resources, it is recommended a representative of the Idaho SHPO be notified before spill cleanup commences. The SHPO may provide monitors to be present during cleanup operations (NWAC, 2005). Resource specialists—such as archeologists, anthropological historians, and object conservators—may be consulted, as appropriate, during spilled material releases to aid in determining which cultural resources may be present and in which areas, as well as which response efforts may warrant modification due to a specific cultural resource. Both the SHPO and the Kootenai Tribe should be contacted (see contact sheet).

6.2.1 Procedures for the Finding of Human Skeletal Remains

Any human remains, burial sites, or burial-related materials that are discovered during responses will be treated with respect at all times.

- If the SHPO monitor or any member of the response work force believes that he or she has encountered human skeletal remains, all work will be stopped immediately and the incident commander notified.
- The incident commander will be responsible for taking appropriate steps to protect the discovery. At a minimum, the immediate area of discovery will be flagged and vehicles and equipment will not be permitted to traverse the discovery site. In no case will further disturbance be performed prior to consultation, and no exposed human remains will be left unattended.
- The incident commander or representative will immediately contact SHPO and the Bonner County medical examiner. The medical examiner will determine whether the discovery is a crime scene or human burial.
- If the remains are determined to be Native American and not to be connected with criminal activity, the Idaho state archaeologist and incident command will confer on a treatment plan for the remains.
- If the remains are determined to be non-Native American or connected with criminal activity, the medical examiner will take charge.

6.2.2 Procedures for the Discovery of Cultural Resources

If the SHPO monitor or any member of the response work force believes that he or she has encountered cultural resources, all work will stop and the incident commander will be notified immediately. The area of work stoppage will be adequate to provide for the security, protection, and integrity of the materials. Prehistoric cultural resources may include the following:

- Lithic debitage (stone chips and other tool-making byproducts)
- Flaked or ground stone tools
- Exotic rocks and minerals
- Concentrations of organically stained sediments, charcoal, or ash
- Fire-modified rock
- Bone (burned, modified, or in association with other bone, artifacts, or features)

Preliminary Draft for Agency Review

- Shell

Historic (i.e., over 50 years old) cultural material may include the following:

- Bottles or other glass
- Cans
- Ceramics
- Milled wood, brick, concrete, metal, or other building material

If the SHPO monitor believes that the discovery is a cultural resource, the incident commander will take appropriate steps to protect the discovery site. At a minimum, the immediate area of the discovery site will be flagged and vehicles and equipment will not be permitted to enter the discovery site. Work in the immediate area will not resume until treatment of the discovery has been completed.

- The incident commander or representative will contact the Idaho state archaeologist and arrange for the discovery to be evaluated by a professional archaeologist. The archaeologist will determine whether the discovery is potentially eligible for listing on the National Register of Historic Places (NRHP). Criteria and integrity requirements for listing on the NRHP (36 CFR 60.4) will provide the standards for identifying and evaluating the significance of cultural material.
- The archaeologist will consult with the Idaho state archaeologist regarding the NRHP eligibility of the discovery. If the SHPO determines that the discovery is eligible, they will consult with incident command to determine appropriate treatment of the discovery.

If adverse project impacts to an eligible site cannot be avoided, a treatment plan will be developed and implemented. The Secretary of the Interior's *Standards for Archaeological Documentation* will apply, including provisions for a research design, reporting, and curation of recovered material and samples (U.S. National Park Service, 2017).

The particular data recovery measures applied to any given historic property will depend on the development of research questions and design of excavation strategies to acquire the data needed to answer those questions. Field notes, maps, plans, profiles, and photographs will document the process. The final report will follow style guidelines of the professional archaeological journal *American Antiquity*; it will synthesize the data collected and address the research questions posed.

6.3 Economic Resources

For more than a century, Bonner County's economy depended almost entirely on logging and lumber mills. Over the past 20 years, the local economic base has shifted to a mixture of tourism, manufacturing, retail, and services.

Bonner County's recreational opportunities and quality of life have attracted thousands of new residents since the mid-1980s. Population growth spurred growth in the construction industry, retail stores, health care providers, public schools, service organizations, and government

Preliminary Draft for Agency Review

agencies. The construction, finance, insurance, and real estate industries in Bonner County are nearly three times larger than they would be in most counties of its size due to the county's exceptionally strong population growth, the large number of vacation homes built, and the high level of commercial and industrial development over the last decade.

Tourism also grew rapidly in the late 1980s and early 1990s. Sandpoint's reputation as a haven for the arts also contributed to the growth of tourism, and the 1990 expansion of Schweitzer Mountain Resort boosted winter recreation.

More than a dozen manufacturers have relocated to the county since 2000. Between 2001 and 2004, Bonner County gained 500 jobs, experiencing growth of 36% in manufacturing jobs. The county's largest manufacturers that do not produce lumber or other wood products include Litehouse, Unicep Packaging, Encoder Products, Cygnus, Thorne Research Products, Diedrich Roasters, Quest Aircraft, Tamarack Aerospace Group, and Aerocet, Inc.

Over half (55 percent) of the Upper Pend Oreille Sub-Area is privately owned. The remaining land is managed by the USFS (25%), the state (7%), and BLM (1.6%). Major land uses in the sub-area include agricultural and timber production and recreational development. Only 12% of the drainage is open water (NPCC, 2005b). Near the lake and on its shore, private lands account for more than half of the ownership (NWAC, 2005). The east side of Lake Pend Oreille is predominantly USFS land.

Major economic resources in the Upper Pend Oreille Sub-Area that could be impacted by a spill are listed below. From upstream to downstream, the following major economic resources are present in the GRP coverage area.

6.3.1 Cabinet Gorge Dam and Reservoir

The Cabinet Gorge Dam and Reservoir is located on the Clark Fork River, 0.25 miles west of the Idaho-Montana state line and 20 miles downstream of the larger Noxon Rapids Dam. Operated by Avista Utilities for hydroelectric power generation (20,000 kilowatts), Cabinet Gorge lies 7.5 miles upstream of the town of Clark Fork and 11 miles upstream of Lake Pend Oreille. Cabinet Gorge impounds a 20-mile long reservoir containing approximately 105,000 acre-ft of storage at full pool elevation (2,175 ft) (Bonner County, 2010b).

The dam, a 395-foot concrete arch between two concrete abutments, is 208 ft tall at its highest point (Bonner County, 2010b). The dam/reservoir complex is designed to generate electricity and is not intended to provide significant floodwater storage or detainment (Avista Utilities, 2011). The spillway is controlled by eight vertical lift spill gates, each 40 ft wide by 35 ft high (Bonner County, 2010b). Dam outfalls cannot be turned completely off as a means to contain (soluble or entrained) spilled materials or slow their dispersal. In addition, operating requirements contained in the FERC licenses for these dams mandate minimum discharges (Avista Utilities, 2011). Since the dam outfalls are designed and operated in an underflow discharge configuration, with the exception of two small trash/debris gates, floating spilled materials could be captured, contained, and collected in the weir pool by temporarily closing the debris gates.

Preliminary Draft for Agency Review

From a hydrologic perspective, this reservoir functions as a flowing section of river, with slow flow rates (less than 1 ft per second) in most places (Avista Utilities, 2011).

Response strategies MP 62.95 have been developed to address potential spilled material impacts to this resource.

6.3.2 Cabinet Gorge Fish Hatchery/Avista Utilities Fish Rearing Facility

Cabinet Gorge Fish Hatchery/Avista Utilities Fish Rearing Facility is located on the southern side of the Clark Fork River, approximately 8 miles southeast of Clark Fork. The hatchery was constructed in 1985 to mitigate for fish losses caused by the construction of hydroelectric dams on the Pend Oreille River system. The project was co-funded by Avista Utilities, BPA, and the IDFG. Water for fish rearing at the hatchery is supplied by six ground water well pumps. A total of 10,995 gallons per minute of water is supplied by these pumps and routed to 64 individual raceways. Each raceway can hold 250,000 two-inch kokanee salmon. The primary species of fish reared is kokanee salmon. The hatchery also houses the westslope cutthroat trout bloodstock for the state. Other species of fish raised are rainbow trout and fall Chinook salmon (IDFG, 2015b).

A notification and collection strategy at MP 61.63 has been developed as a means to notify the hatchery in the event of a spill and potentially collect spilled material.

6.3.3 Lake Pend Oreille

Lake Pend Oreille supports a significant sport fishery. In 1991, anglers expended an estimated 465,000 hours fishing the lake with approximately 65% of the effort targeting trout and 35% of the effort targeting kokanee (Paragamian and Ellis, 1994). The world record bull trout, 14.5 kilograms (kg) (32 pounds), and the world record rainbow trout, 16.8 kg (37 pounds), were taken from Lake Pend Oreille in 1949 and 1947, respectively. Current and planned fisheries management direction in Lake Pend Oreille emphasizes kokanee as a keystone species with bull trout and rainbow trout managed for a trophy fishery. Westslope cutthroat trout are managed primarily as a wild trout fishery with restrictive regulations (NPCC, 2005b).

6.3.4 Sandpoint Public Water System

The Sandpoint Public Water System is operated by the Sandpoint Public Works Department and supplies water to approximately 10,000 residents through approximately 4,500 service connections. From September through November each year, this system is supplied by water from Lake Pend Oreille through a submerged intake structure approximately 1,500 ft offshore near the Sandpoint City Beach. Normal water demand is met during the remainder of the year through their primary water supply intake on Little Sand Creek, which cannot be directly impacted by a rail-related spilled materials release due to its location at a higher elevation than the rail corridor. When Lake Pend Oreille is used as a water source, the system retains approximately 4 million gallons of water in reserve, which would last approximately 2 days if use restrictions are imposed (personal communication from Cody VanDyke, Public Works Director, Sandpoint).

Preliminary Draft for Agency Review

Response strategy US95 473.84 has been developed to address potential spilled material impacts to this resource.

6.3.5 Sandpoint City Beach

Sandpoint City Beach, located at the eastern end of Bridge Street, is one of the oldest and best known parks in Sandpoint. The 18-acre park was donated to Sandpoint in 1922 by the Northern Pacific Railroad and is now one of the focal points of Sandpoint. It has been developed over the years by volunteer labor, donations, and city, county, state, and federal funds. The city beach is the busiest park in the city park system and is used for several community special events including a large arts and crafts fair hosted by Pend Oreille Arts Council and the Lion's Club 4th of July Fireworks.

Response strategy US95 473.9 has been developed to address potential spilled material impacts to this resource.

6.3.6 City of Dover Public Water System

The City of Dover Public Water System is operated by the City of Dover Water Department and supplies water to approximately 230 residents through 177 service connections. This system is supplied by water from the Pend Oreille River from a submerged intake structure located approximately 3,500 ft upstream of the Dover Bay Marina boat launch and approximately 250 ft offshore. The system retains approximately 400,000 gallons of water in reserve, which would last approximately 6 days during peak demand with no use restrictions imposed (personal communication from William C. Strand, PhD, System Manager, Dover).

Response strategy US2 25.63 has been developed to address potential spilled material impacts to this resource.

6.3.7 City of Laclede Public Water System

The City of Laclede Public Water System is operated by the Laclede Water District and supplies water to approximately 915 residents through approximately 340 service connections. This system is supplied by water from the Pend Oreille River from a submerged intake structure located approximately 160 ft offshore near the Laclede public boat launch (DEQ, 2001).

Response strategy US2 14.37 has been developed to address potential spilled material impacts to this resource.

6.3.8 Priest River Public Water Supply

Priest River Public Water Supply is operated by the Priest River Public Works Department and supplies water to approximately 2,150 residents through approximately 932 service connections. This system is supplied by water from the Pend Oreille River from a submerged intake structure located approximately 230 ft offshore near the Priest River public boat launch (DEQ, 2012).

Response strategy US2 6.38 has been developed to address potential spilled material impacts to this resource.

Preliminary Draft for Agency Review

6.3.9 Waterlife Discovery Center

The Waterlife Discovery Center, previously known as the Sandpoint State Fish Hatchery, was built in 1909 by the IDFG, with partial funding from the local sportsmen's association.

The facility is located on a small bluff on the shores of the Pend Oreille River on Lakeshore Drive in Sandpoint. Spring water from a neighboring property is piped underground to supply water for the hatchery tanks and fish runway. However, because the water is too cold for successful aquaculture, the hatchery has been used primarily as a summer redistribution facility for rainbow trout (Sandpoint, 2015). The facility now houses a small museum and is used as an environmental educational facility for schools and conservation groups.

6.3.10 Albeni Falls Dam

Albeni Falls Dam is located on the Pend Oreille River approximately 6 miles west of Priest River. The 65-foot-high concrete dam was completed in 1952. It is owned by the USACE and operated for hydroelectric power (42,600 kilowatts). The dam also reduces the maximum lake level for flood control. The reservoir has a storage capacity of 1.56-million acre-ft of water and provides recreational areas for visitors (Bonner County, 2010b).

Since the dam outfalls are designed and operated in an underflow discharge configuration, with the exception of small trash/debris gates, low density spilled materials floating near the surface could be captured, contained, and collected in the weir pool by temporarily closing the debris gates.

Response strategies US2 2.21 and US2 2.19 have been developed to address potential spilled material impacts to this resource.

6.3.11 Seasonal/Private/Non-Municipal Water Systems

Seasonal/private/non-municipal water systems using Lake Pend Oreille as a water source include Island View Resort, Kullyspell Estates, Red Fir Resort, Sunnyside, Oden Bay, and Sourdough Point. Notification strategies have been developed to address these known seasonal/private/non-municipal water systems within the GRP coverage area. See additional discussion in Section 4.5.

6.3.12 Marinas

Lake Pend Oreille and the Pend Oreille River have six marinas that serve the boating needs of sport fisherman and recreational boaters. Four of those marinas can supply fuel. Appendix F highlights the marinas and indicates which ones provide services in addition to boat parking.

Preliminary Draft for Agency Review

7 References

Almack, J.A. 2001. Mountain caribou recovery in the southern Selkirk Mountains of Washington, Idaho, and British Columbia. Progress report Jan 1 through Dec 31, 2001. Washington Department of Fish and Wildlife, Olympia, Washington.

Alt, D. 2001. Glacial Lake Missoula and Its Humongous Floods. Mountain Press Publishing Company: Missoula, Montana.

Alt, D.D. and D.W. Hyndman. 1994. Roadside Geology of Washington. Mountain Press Publishing Company. Missoula, Montana.

Avista Utilities. 2011. Geographic Response Plan – Lower Clark Fork River. Prepared for Sanders County Local Emergency Planning Committee. 140 pg.

Bennett, D.H. and J.M. DuPont. 1993. Fish habitat associations of the Pend Oreille River, Idaho. University of Idaho, Project F-73-R-15, Prepared for: Idaho Department of Fish and Game, Boise.

Bonner County. 2009. Bonner County Emergency Operations Plan. Retrieved from: http://bonnercounty.us/wp-content/uploads/Emergency%20Managment/EOP%20Plan.pdf

Bonner County. 2010a. Bonner County Evacuation and Reception Plan. Bonner County, ID

Bonner County. 2010b. All-Hazard Mitigation Plan; Bonner County and the Incorporated Cities of Clark Fork, Dover, East Hope, Hope, Kootenai, Old town, Ponderay, Priest River and Sandpoint. Retrieved from: http://bonnercounty.us/wp-content/uploads/Emergency%20Managment/Final-Bonner-AHMP.pdf

Bonner County. 2010c. Internal Bonner County Hazardous Materials Flow Study Report Bonner County, ID September 8, 2010.

BPA (Bonneville Power Administration). 1996. Albeni Falls Wildlife Management Plan - Preliminary Environmental Assessment (DOE/EA--1099).

BPA (Bonneville Power Administration), U.S. Army Corps of Engineers, and U.S. Department of the Interior. 2014. Draft Environmental Assessment. NEPA Register Number: DOE/EA-1969

Cameo Chemicals. 2017. Ammonium Nitrate, Liquid (Hot Concentrated Solution) Chemical Datasheet. Retrieved from https://cameochemicals.noaa.gov/chemical/5397.

Clark Fork Delta Restoration Project. 2016. http://clarkforkdelta.org

DEQ (Idaho Department of Environmental Quality). 2001. Source Water Assessment Summary Report for PWS# ID1090073, Retrieved from:

Preliminary Draft for Agency Review

http://www2.deq.idaho.gov/water/swaOnline/SurfaceWaterSummaryReport/ID1090073/E0005121

DEQ (Idaho Department of Environmental Quality). 2012. Source Water Assessment Summary Report for PWS# ID1090107, Retrieved from: http://www2.deq.idaho.gov/water/swaOnline/SurfaceWaterSummaryReport/ID1090107/E0005120

Ducks Unlimited. 2017. "Pilot Restoration Project Completed in Idaho Panhandle." Accessed from http://www.ducks.org/idaho/idaho-conservation-projects/pilot-restoration-project-completed-in-idaho-panhandle on May 30, 2017.

Entz, R. and J. Maroney. 2001. Draft Pend Oreille Subbasin Summary. Editor S. Stovall. Prepared for the Northwest Power Planning Council.

Evans, H.F. 1960. A preliminary investigation of caribou in the northwestern United States. M.S. Thesis, Montana State University, Missoula, MT. 145 pp.

Fredericks, J., M.A. Maiolie, and S. Elam. 1995. Kokanee impacts assessment and monitoring on Lake Pend Oreille, Idaho. Idaho Department of Fish and Game, Annual Progress Report to Bonneville Power Administration, Contract 94BI12917, Project 94-035, Portland, Oregon.

Frenzel, S.A. 1991. Hydrologic budgets, Pend Oreille Lake, Idaho, 1989-90. U.S. Geological Survey. Boise, Idaho.

Hoelscher, B. 1993. Pend Oreille Lake fishery assessment. Bonner and Kootenai Counties, Idaho. 1951-1989. Water Quality Status Report No. 102. Idaho Department of Health and Welfare Division of Environmental Quality. Boise, Idaho.

IBIS (Interactive Biodiversity Information System). 2003. Subbasin planning query for the Intermountain Province. Provided by Northwest Habitat Institute, Corvallis, Oregon. 25 May 2003.

IDFG (Idaho Department of Fish and Game). 2001. Distribution of special status animals by county. Retrieved from: http://www2.state.id.us/fishgame/info/cdc/animals/animals_by_county.htm

IDFG (Idaho Department of Fish and Game). 2003. Economic Survey Report. Retrieved from: https://collaboration.idfg.idaho.gov/FisheriesTechnicalReports/Mgt08-129Grunder2003%20Economic%20Survey%20Report.pdf

IDFG (Idaho Department of Fish and Game). 2005. Idaho Wetland Conservation Prioritization Plan. Retrieved from: https://fishandgame.idaho.gov/ifwis/idnhp/cdc_pdf/u05hah01idus.pdf

IDFG (Idaho Department of Fish and Game). 2015a. Wildlife Management Areas. Retrieved from: http://fishandgame.idaho.gov/public/wildlife/wma/

Preliminary Draft for Agency Review

IDFG (Idaho Department of Fish and Game). 2015b. Cabinet Gorge Fish Hatchery. Retrieved from: http://fishandgame.idaho.gov/public/fish/?getPage=89

IDFG (Idaho Department of Fish and Game). 2017. Celebrating the Nation's Icon. Retrieved from: https://fishandgame.idaho.gov/content/75th-celebration-story/celebrating-nations-icon

IGBC (Interagency Grizzly Bear Committee). 2017 Retrieved from http://igbconline.org/selkirkcabinet-yaak/

IOEM (Idaho Office of Emergency Management). 2013. Idaho Hazardous Materials / Weapons of Mass Destruction Incident Command and Response Support Plan. Retrieved from: Reference: https://ioem.idaho.gov/Pages/HazardousMaterials/Plan.aspx)

IOEM (Idaho Office of Emergency Management). 2015. Idaho Emergency Operations Plan. Retrieved from: https://ioem.idaho.gov/Pages/Plans/Documents/2015%20IDEOP.pdf

Lee, K.H. and R.S. Lunetta. 1990. Watershed characterization of using Landsat Thematic mapper satellite imagery, Lake Pend Oreille, Idaho. US EPA Environmental Systems Monitoring Lab. Las Vegas, Nevada.

Kennedy/Jenks. 2015. Draft Pend Oreille Subbasin Geographical Response Plan prepared by Kennedy/Jenks Consultants for BNSF Railway Company. Helena MT. June 2015.

Martin, R.C., H.J. Hansen, G.A. Meuleman. 1988. Albeni Falls Wildlife Protection, Mitigation, and Enhancement Plan. Prepared by Idaho Fish and Game, Boise, Idaho for Bonneville Power Administration. August 1988.

NPCC (Northwest Power and Conservation Council). 2005a. Intermountain Province Subbasin Plan. In Columbia River Basin Fish and Wildlife Program. Portland, Oregon, 2005. Retrieved from: http://www.nwcouncil.org/fw/subbasinplanning/intermountain/plan/

NPCC (Northwest Power and Conservation Council). 2005b. Pend Oreille Subbasin Plan. In Columbia River Basin Fish and Wildlife Program. Portland, Oregon, 2005. Retrieved from: http://www.nwcouncil.org/fw/subbasinplanning/intermountain/plan/

Paragamian, V.L. and V.L. Ellis. 1994. Kokanee stock status and contribution of Cabinet Gorge Hatchery, Lake Pend Oreille, Idaho. Idaho Department of Fish and Game, Annual Report to Bonneville Power Administration, Project 85-339, Portland, Oregon.

PBTTAT (Panhandle Bull Trout Technical Advisory Team). 1998. Lake Pend Oreille key watershed: bull trout problem assessment (June 1998 draft). Lake Pend Oreille Watershed Advisory Group and Idaho Division of Environmental Quality, Boise, Idaho.

Rieman, B.E. and C.M. Falter. 1976. Lake Pend Oreille limnological studies. Idaho Department of Fish and Game, Federal Aid to Fish and Wildlife Restoration, Project F-53-R-10. Job Performance Report. Boise, Idaho.

Preliminary Draft for Agency Review

Rosgen. D.L. 1994. A classification of natural rivers. Catena 22:169-199.

RRT/NWAC (Regional Response Team (Region 10) and the Northwest Area Committee). 2005. Pend Oreille Geographic Response Plan. Retrieved from: http://www.rrt10nwac.com/Files/GRP/PendOreille.pdf

RRT/NWAC (Regional Response Team (Region 10) and the Northwest Area Committee). Northwest Area Contingency Plan. 2017. Retrieved from: http://rrt10nwac.com/

Sandpoint. 2015. Waterlife Discovery Center: History of the Sandpoint Hatchery. Retrieved from: http://www.sandpoint.com/go/discoverycenter/

Savage, C.N. 1965. Geologic history of Pend Oreille Lake region in north Idaho. Pamphlet 134, Idaho Bureau of Mines and Geology, Moscow, Idaho.

Stevens, Gary et al. 2015. The Spokane Valley – Rathdrum Prairie Aquifer Atlas. Retrieved from: http://www.spokaneaquifer.org/2015-aquifer-atlas/2015AquiferAtlas.html

Stinson, D.W. 2001. Washington state recovery plan for the lynx. Washington Department of Fish and Wildlife, Olympia, Wash. 78 pp. + 5 maps.

U.S. Census. 2017. 2010 Population Data. Retrieved from: https://factfinder.census.gov/faces/nav/jsf/pages/community_facts.xhtml?src=bkmk.

U.S. Department of Transportation, Pipeline and Hazardous Materials Safety Administration. 2016. Emergency Response Guidebook. Retrieved from: http://www.phmsa.dot.gov/staticfiles/PHMSA/DownloadableFiles/Files/Hazmat/ERG2016.pdf

U.S. National Park Service. 2017. Archeology and Historic Preservation: Secretary of the Interior's Standards and Guidelines. Retrieved from: https://www.nps.gov/history/local-law/arch_stnds_1.htm

U.S. Senate. Committee on Public Works. 1949. Improvement at Albeni Falls on Pend Oreille River, Idaho. (81st Congress, 1st Session, Doc. No. 9). Washington: Government Printing Office.

USACE (U.S. Army Corp of Engineers). 2016. Retrieved from: http://www.nwd-wc.usace.army.mil/nws/hh/www/ESPTraces/Pend_Oreille_9-14-2016.pdf

USFWS (U.S. Fish and Wildlife Service). 1953. An interim report on the fish and wildlife resources affected by the Albeni Falls project, Pend Oreille River, Idaho.

U.S. Fish and Wildlife Service. 1993a. Grizzly bear recovery plan. U.S. Fish and Wildlife Service, Missoula, Montana. 181 pp.

USFWS (U.S. Fish and Wildlife Service). 1993b. Recovery plan for woodland caribou in the Selkirk Mountains. U.S. Fish and Wildlife Service, Portland, Oregon. 71 pp.

Preliminary Draft for Agency Review

USFWS (U.S. Fish and Wildlife Service). 2014. Critical Habitat for Bull Trout: Unit 30, Kootenai River Basin; Subunit: Kootenai River. Retrieved from: http://www.fws.gov/pacific/bulltrout/

USFWS (U.S. Fish and Wildlife Service). 2015a. FWS Critical Habitat for Threatened and Endangered Species: Critical Habitat Portal. Retrieved from: http://ecos.fws.gov/crithab/

USFWS (U.S. Fish and Wildlife Service). 2015b. Environmental Conservation Online System: Species Profile for Woodland Caribou. Retrieved from: http://ecos.fws.gov/speciesProfile/profile/speciesProfile.action?spcode=A088

USFWS (U.S. Fish and Wildlife Service). 2015c. Recovery Plan for the Coterminous United States Population of Bull Trout. Retrieved from: https://www.fws.gov/pacific/bulltrout/pdf/Final_Bull_Trout_Recovery_Plan_092915.pdf

Weatherspark. 2017. Average Weather Summary for Sandpoint, Idaho. Retrieved from: https://weatherspark.com/averages/31719/Sandpoint-Idaho-United-States

Weitkamp, D.E., R.D. Sullivan, T. Swant, and J. DosSantos. 2003. Gas bubble disease in resident fish of the Lower Clark Fork River. Transactions of the American Fisheries Society 132:865-876.

Preliminary Draft for Agency Review

8 Appendices

Preliminary Draft for Agency Review

This page intentionally left blank for correct double-sided printing.

Preliminary Draft for Agency Review

Appendix A Responding to Releases

Responding to Petroleum Releases

Short-Term Actions

- Identify and mitigate fire, explosion, and vapor hazards. Some situations may require you to immediately notify your local fire department.
- Take immediate action to prevent any further release of petroleum into the environment.
- Report the release to the Idaho Department of Environmental Quality (DEQ) within 24 hours.
- Handle contaminated materials, including soil and water, in a responsible manner. This may require safely storing contaminated materials until proper disposal or treatment can be accomplished. Always avoid contaminating previously uncontaminated areas.
- Additional guidance may be obtained from IDEQ regional offices.
- Begin removing free product floating on ground water or in excavations as soon as possible.

Reporting Requirements for Petroleum Releases

Owners and operators of petroleum storage tank (PST) systems must report to DEQ within 24 hours if any of the following conditions occur.

Underground Releases

- A discovery by owners and operators or others of a petroleum release at the PST site or surrounding area. Discovery can include the presence of free product or dissolved product in nearby surface water or ground water or vapors in soils, basements, and sewer or utility lines.
- Unusual operating conditions observed by owners and operators. These conditions include erratic behavior of product dispensing equipment, sudden loss of product from the PST system or an unexplained presence of water in the PST system. However, no reporting is required if the PST system equipment is found to be defective but not leaking and is immediately repaired or replaced.
- Monitoring results from a release detection method that indicate a release may have occurred. However, no reporting is required if the monitoring device is found to be defective and is immediately repaired, recalibrated or replaced, and additional monitoring does not confirm a release or, in the case of inventory control, a second consecutive month of data does not confirm a release.

Above-Ground Spills and Overfills

- An above-ground spill or overfill of petroleum that results in a release to the environment which exceeds 25 gallons or causes a sheen on nearby surface water must be reported to DEQ within 24 hours.

Preliminary Draft for Agency Review

- An above-ground spill or overfill of petroleum which is less than 25 gallons and does not cause a sheen on nearby surface water need only be reported to DEQ if cleanup cannot be completed within 24 hours.
- For specific reporting and release requirements from dielectric oil (mineral insulating oil) releases from electric equipment, see the Idaho Water Quality Standards & Wastewater Treatment Requirements (IDAPA 58.01.02.849).

To report a petroleum release to DEQ during regular business hours, contact the appropriate regional office at the number provided at the end of this information sheet.

Federal Reporting Requirements

Any person or organization responsible for a release or spill is also required to notify the federal government when the amount reaches a federally determined limit. Please go to the following U.S. Environmental Protection Agency web link to determine if a release requires federal reporting:

https://www.epa.gov/emergency-response/when-are-you-required-report-oil-spill-and-hazardous-substance-release

Responding to Hazardous Material Spills

DEQ rules define hazardous material as a material or combination of materials that, when discharged in any quantity into state waters, presents a substantial present or potential hazard to human health, the public health, or the environment.

Short-Term Actions

In the case of an unauthorized release of hazardous materials to state waters or to land such that there is a likelihood that it will enter state waters, the responsible persons in charge must:

- Make every reasonable effort to abate and stop a continuing spill
- Make every reasonable effort to contain spilled material in such a manner that it will not reach surface or ground waters of the state
- Collect, remove, and dispose of the spilled material in a manner approved by DEQ

Reporting Requirements for Hazardous Materials Spills

All Hazardous Material Releases

In the case of an unauthorized release of hazardous materials to state waters or to land such that there is likelihood that it will enter state waters, the responsible persons in charge must immediately notify DEQ or designated agent of the spills. This requirement applies regardless of any additional reporting done under the below requirements (IDAPA 58.01.02.850).

Preliminary Draft for Agency Review

Releases Exceeding Reportable Quantity (Within a 24-Hour Period)

In the case of a release from a facility into the environment of a hazardous substance in excess of its reportable quantity (within a 24-hour period), the facility must immediately notify the National Response Center (NRC) or State Communications Center (StateComm) within a 24-hour period. Reportable Quantities for chemicals and hazardous wastes are found in 40 CFR §302.4.

Releases from LQGs and TSDFs

In the case of a Large Quantity Generators (LQGs) and Treatment, Storage, and Disposal Facilities (TSDFs), if the emergency coordinator (or designee) determines that the facility has had a release, fire, or explosion which could threaten human health, or the environment outside the facility, the coordinator must: 1) notify appropriate local authorities if evacuation of local areas may be necessary and 2) notify the NRC and StateComm of the incident.

In addition, within 15 days of the incident, the LQG or TSDF must submit a written follow-up report to DEQ which includes the name, address, and telephone number of the owner/operator and the facility; the date, time and type of incident; the name and quantity of material(s) involved; the extent of any injuries, if any; an assessment of actual or potential hazards to human health or the environment; and estimated quantity and disposition of recovered material that resulted from the incident.

Releases from Hazardous Waste Tank Systems

If a facility has a release of hazardous waste from a tank system to the environment, they are required to notify the Department within 24 hours. If the release has been reported pursuant to 40 CFR Part 302 as noted above, that report will satisfy this requirement. Releases that are less than 1 pound and immediately contained and cleaned up are exempt from this reporting requirement.

In addition, within 30 days of detection of a release of hazardous waste from a tank system, a written follow-up report must be submitted to DEQ describing the likely route of migration of the release; the characteristics of the surrounding soil; results of any monitoring or sampling conducted in connection to the release; proximity to down gradient drinking water, surface water, and population areas; and a description of the actions taken or planned.

To report a spill or release to DEQ during regular business hours, contact the appropriate regional office at the number provided at the end of this information sheet.

Federal Reporting Requirements

Any person or organization responsible for a release or spill is also required to notify the federal government when the amount reaches a federally-determined limit. Please go to the following EPA web link to determine if a release requires federal reporting:

https://www.epa.gov/emergency-response/when-are-you-required-report-oil-spill-and-hazardous-substance-release

Preliminary Draft for Agency Review

Release Reporting Phone Numbers

Idaho State Communication Center:

(800) 632-8000 (Calls from outside Idaho)
(208) 846-7610 (Calls from within Idaho)

National Response Center:

(800) 424-8802

Idaho Department of Environmental Quality:

DEQ State Office
1410 N. Hilton
Boise, ID 83706
ph: (208) 373-0502
toll-free: (866) 790-4337

DEQ Boise Regional Office
1445 N. Orchard St.
Boise, ID 83706
ph: (208) 373-0550
fx: (208) 373-0287
toll-free: (888) 800-3480

DEQ Coeur d'Alene Regional Office
2110 Ironwood Parkway
Coeur d'Alene, ID 83814
ph: (208) 769-1422
fx: (208) 769-1404
toll-free: (877) 370-0017

DEQ Idaho Falls Regional Office
900 N. Skyline Drive, Suite B
Idaho Falls, ID 83402
ph: (208) 528-2650
fx: (208) 528-2695
toll-free: (800) 232-4635

DEQ Lewiston Regional Office
1118 F St.
Lewiston, ID 83501
ph: (208) 799-4370
fx: (208) 799-3451
toll-free: (877) 541-3304

DEQ Pocatello Regional Office
444 Hospital Way, #300
Pocatello, ID 83201
ph: (208) 236-6160
fx: (208) 236-6168
toll-free: (888) 655-6160

DEQ Twin Falls Regional Office
650 Addison Ave. West, Suite 110
Twin Falls, ID 83301
ph: (208) 736-2190
fx: (208) 736-2194
toll-free: (800) 270-1663

NOTE: For non-emergency petroleum releases that are immediately contained and do not present an imminent threat to human health or the environment that are discovered on weekends, holidays or after normal business hours, notification may be postponed until the next business day. Otherwise, afterhours petroleum releases should be reported to StateComm.

Preliminary Draft for Agency Review

USCG0017043/27

Appendix B Strategy Reports

Preliminary Draft for Agency Review

This page intentionally left blank for correct double-sided printing.

Preliminary Draft for Agency Review

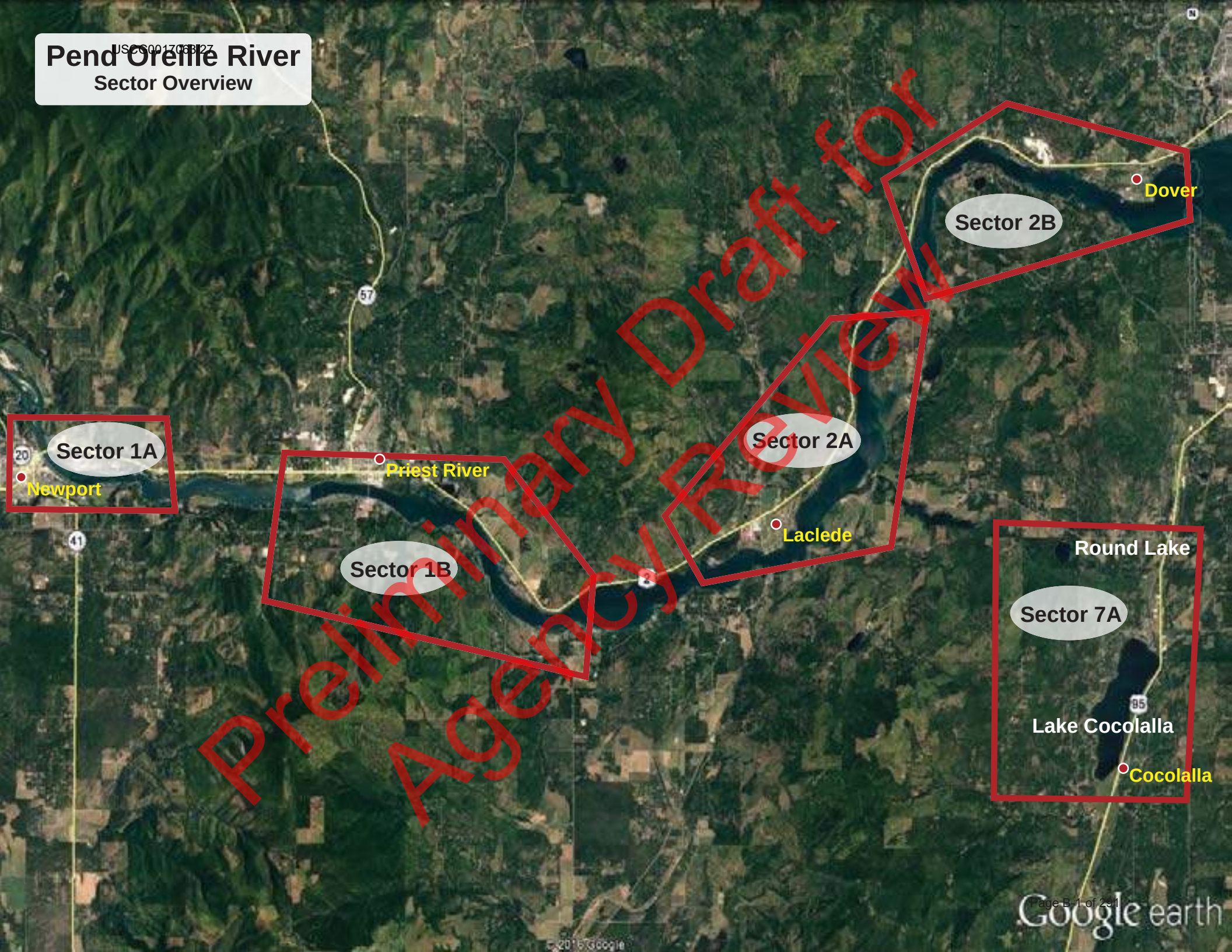
Pend Oreille River
Sector Overview
Sector 1A
Newport
Priest River
Sector 1B
Sector 2A
Laclede
Sector 2B
Dover
Round Lake
Sector 7A
Lake Cocolalla
Cocolalla
Preliminary Draft for Agency Review
Google earth

Lake Pend Oreille
Sector 3 Overview

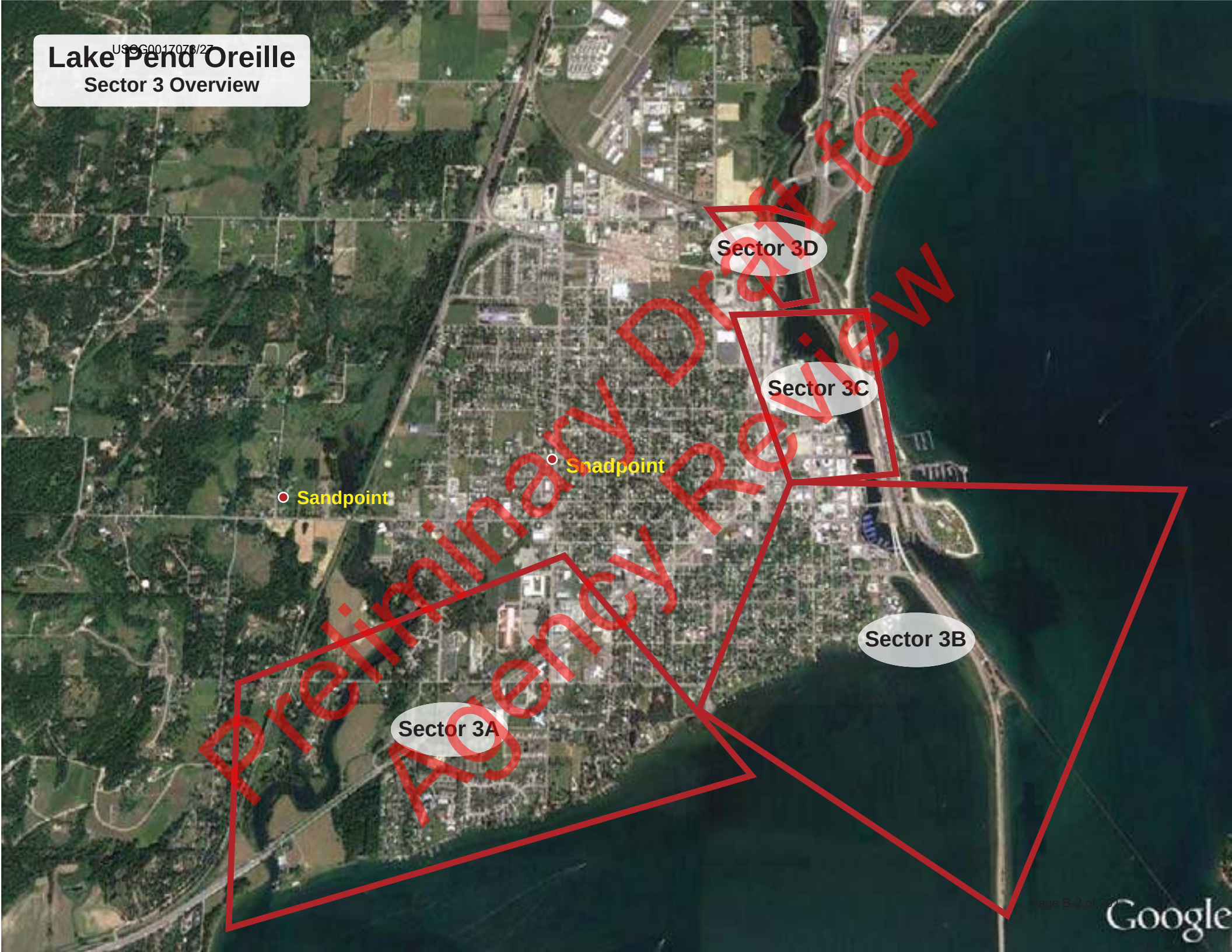

Preliminary Draft for Agency Review

Lake Pend Oreille
Sector Overview

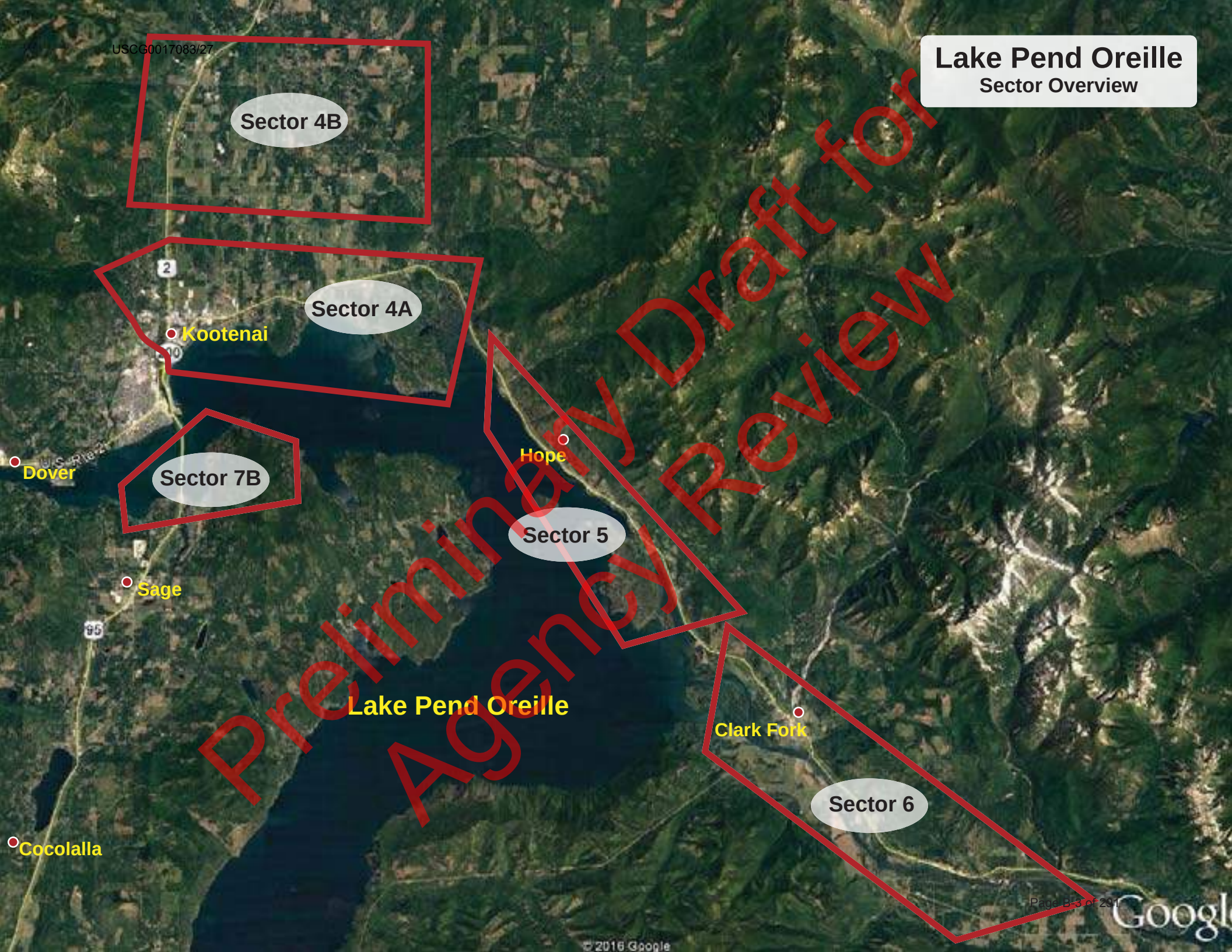

Preliminary Draft for Agency Review

Sector & Map	Site ID & Highway Milepost	Railroad Milepost	Site Name	Accessible by boat at Low Water?	Nearest Boat Ramp or Staging Area
Sector 1A West Pend Oreille	US2 0.30	POVA 1430.86	Oldtown Boat Launch	Yes	US2 0.30
	US2 2.0	POVA 1428.7	Albeni Falls Dam	Uncertain	US2 2.0
	US2 2.21	POVA 1428.66	Albeni Cove Recreation Area	No	US2 2.21
Sector 1B West Pend Oreille Fire District	US2 5.73	POVA 1424.79	10th St Surface Water	Uncertain	US2 6.87
	US2 6.2	POVA 1424.31	Priest River- South	No	US2 6.38
	US2 6.38	POVA 1424.13	Priest River City Water Intake	Yes	US2 6.38
	US2 6.87	POVA 1423.64	Priest River Mouth	Yes	US2 6.87
	US2 7.59	POVA 1423.0	Priest River Mouth Slough	Unlikely	US2 6.87
	US2 10.19	POVA 1420.46	Carey Creek Game Management Area	Unlikely	US2 6.87
	US2 10.52	POVA 1420.12	Baylor Lane Slough	No	US2 13.49

Preliminary Draft for Agency Review

Sector & Map	Site ID & Highway Milepost	Railroad Milepost		Accessible by boat at Low Water?	Nearest Boat Ramp or Staging Area
Sector 2A Westside Fire District	US2 13.3	POVA 1417.28	Riley Creek Slough	No	US2 13.49
	US2 13.49	POVA 1417.06	Riley Creek Recreation Area	No	US2 13.49
	US2 14.37	POVA 1416.24	Laclede Public Water Supply	Yes	US2 14.37
	US2 16.06	UP Spokane RR 62.78	Cocolalla Creek Mouth	Unlikely	US2 14.37
	US2 16.29	UP Spokane RR 63.14	Morton Slough Boat Launch	No	US2 16.29
	US2 17.12	POVA 1413.35	Morton Slough Game Management Area	No	US2 14.37
Sector 2B Westside Fire District	US2 20.71	POVA 1409.86	Bay near Muskrat Lake	No	US95 470.21
	US2 24.89	BNSF Newport 71.01	Dover Bay Slough	No	US2 25.15
	US2 25.16	BNSF Newport 71.31	Dover Bay Marina	No	US2 25.15
	US2 25.63	BSF Newport 71.87	Dover Bay Water Intake	Yes	US2 25.15

Preliminary Draft for Agency Review

Sector & Map	Site ID & Highway Milepost	Railroad Milepost	Site Name	Accessible by boat at Low Water?	Nearest Boat Ramp or Staging Area
Sector 3A Sandpoint	US2 26.68	BNSF Newport 72.79	Chuck Slough	No	US2 25.15
	US2 27.07	BNSF Newport 73.29	Ontario St West	No	US2 25.15
	US2 27.17	BNSF Newport 73.33	Ontario St East	No	US2 25.15
	US2 27.74	BNSF Spokane 3.32	S. Ella Ave Culvert	No	US95 473.87
Sector 3B Sandpoint	US2 28.02	BNSF Spokane 3.33	Memorial Park Culvert	No	US95 473.87
	US2 28.17	BNSF Spokane 3.35	S Euclid Ave Culvert	No	US95 473.87
	US2 28.31	BNSF Spokane 3.37	S 4th Ave Culvert	No	US95 473.87
	US2 28.36	BNSF Spokane 3.38	S 3rd Ave Culvert	No	US95 473.87
	US95 472.85	BNSF Spokane 4.28	Long Bridge	Yes	US95 471.08
	US95 473.84	BNSF Spokane 3.4	Sandpoint Public Works Water Intake	Yes	US95 473.87
	US95 473.9	BNSF Spokane 3.17	Sandpoint City Beach and Marina	Yes	US95 473.87
	US95 473.91	BNSF Spokane 3.29	Mouth of Sand Creek	Yes	US95 473.87
	US95 474.31	BNSF Spokane 3.13	Lower Sand Creek	No	US95 473.87

Preliminary Draft for Agency Review

Sector & Map	Site ID & Highway Milepost	Railroad Milepost	Site Name	Accessible by boat at Low Water?	Nearest Boat Ramp or Staging Area
Sector 3C Sandpoint	US95 474.41	BNSF Spokane 3.02	E. Cedar St Culvert # 1	No	US95 473.87
	US95 474.45	BNSF Spokane 2.98	E. Cedar St Culvert # 2	No	US95 473.87
	US95 474.46	BNSF Spokane 2.97	E. Cedar St Culvert # 3	No	US95 473.87
	US95 474.78	BNSF Spokane 2.9	Alder St Culvert	No	US95 473.87
	US95 475.09	BNSF Kootenai 1402.96	N. 5th Ave Surface Water Outflow #1	No	US95 473.87
Sector 3D Sandpoint	US95 475.21	BNSF Kootenai 1402.75	N. 5th Ave Surface Water Outflow #2	No	US95 473.87
	US95 475.22	BNSF Kootenai 1402.74	N. 5th Ave Surface Water Outflow #3	No	US95 473.87
	US95 475.3	BNSF Kootenai 1402.66	Sand Creek Trestle	No	US95 473.87
	US95 475.32	BNSF Kootenai 1402.63	Visitor Center Culvert #1	No	US95 473.87
	US95 475.34	BNSF Kootenai 1402.6	Visitor Center Culvert #2	No	US95 473.87
	US95 475.4	BNSF Kootenai 1402.58	Visitor's Center Culvert # 3	No	US95 473.87
	US95 475.41	BNSF Kootenai 1402.55	Visitor's Center Culvert # 4	No	US95 473.87
	US95 475.42	BNSF Kootenai 1402.57	Baldy Mountain Rd Surface Water Outflow #2	No	US95 473.87
	US95 475.5	BNSF Kootenai 1402.53	Baldy Mountain Rd Surface Water Outflow #1	No	US95 473.87
	US95 475.53	BNSF Kootenai 1402.33	N. Boyer Ave and Baldy Mountain Rd.	No	US95 473.87

Preliminary Draft for Agency Review

Sector & Map	Site ID & Highway Milepost	Railroad Milepost	Site Name	Accessible by boat at Low Water?	Nearest Boat Ramp or Staging Area
Sector 4A Northside- (Lakeshore)	US95 478.53	BNSF Kootenai 1399.09	Bronx Rd	No	US95 473.87
	US95 479.99	BNSF Kootenai 1399.67	Sand Creek Water Treatment Plant	No	Not applicable
	SR200 33.15	MRL4 114.92	Boyer Slough	No	none
	SR200 34.53	MRL4 113.5	Oden Water Assn Water Intake	Yes	SR200 42.59
	SR200 34.98	MRL4 113.0	Culver Slough	Unlikely	US95 473.87
	SR200 36.39	MRL4 109.77	Pend Orielle State Wildlife Management Area	Unlikely	uncertain
	SR200 38.69	MRL4 109.93	Pack River Bridge	No	SR200 42.59
	SR200 41.28	MRL4 107.49	Sunnyside Water Intake	Yes	SR200 41.38
Sector 4B Northside- (Selle Valley)	US95 480.44	BNSF Kootenai 1397.09	West Selle Rd	No	no boat access
	US95 484.17	BNSF Kootenai 1393.33	East Colburn	No	US95 473.87
	US95 485.77	BNSF Kootenai 1391.75	Lower Pack River	No	no boat access
	SR200 37.78	MRL4 111.05	Rapid Lightning Road Bridge	No	no boat access

Preliminary Draft for Agency Review

Sector & Map	Site ID & Highway Milepost	Railroad Milepost	Site Name	Accessible by boat at Low Water?	Nearest Boat Ramp or Staging Area
Sector 5 Sam Owen	SR200 40.78	MRL4 107.95	Pack River Trestle	Uncertain	SR200 42.59
	SR200 42.09	MRL4 106.71	Trestle Creek	Unlikely	SR200 42.59
	SR200 46.4	MRL4 102.4	Red Fir Resort Water Intake	Yes	SR200 47.9
	SR200 48.08	MRL4 100.86	Islandview Resort Water Intake	Yes	Sr200 47.9
	SR200 49.45	MRL4 99.36	Kullyspell Estates Water Intake	Yes	SR200 47.38 or SR200 49.46
	SR200 50.19	MRL4 98.52	David Thompson Wildlife Preserve	Unlikley	SR200 47.38
	SR200 50.4	MRL4 98.43	Denton Slough	Unlikely	SR200 51.69
Sector 6 Clark Fork	SR200 54.83	MRL4 94.47	Johnson Creek Trestle	Unlikely	SR200 54.83
	SR200 56.05	MRL4 92.92	Clark Fork Bridge	Yes	SR200 57.07
	SR200 57.12	MRL4 91.79	Lower Fish Hatchery Slough	Uncertain	SR200 57.07
	SR200 58.62	MRL4 90.45	Upper Fish Hatchery Slough	Uncertain	uncertain
	SR200 60.79	MRL4 87.66	Clark for River Access	Yes	SR200 60.79
	SR200 61.63	MRL4 86.81	Cabinet Gorge Fish Hatchery	Yes	on site
	SR200 62.95	MRL4 85.35	Cabinet Gorge Dam	Yes	on site

Preliminary Draft for Agency Review

Sector & Map	Site ID & Highway Milepost	Railroad Milepost	Site Name	Accessible by boat at Low Water?	Nearest Boat Ramp or Staging Area
Sector 7A Sagle (South)	US95 461.32	BNSF Spokane 16.94	Cocolalla Creek Trestle	No	US95 463.62
	US95 463.82	BNSF Spokane 14.22	Cocolalla Creek Outlet	No	US95 473.87
	US95 463.95	BNSF Spokane 14.07	Cocolalla Loop Rd Bridge	No	US95 473.87
	US95 465.11	BNSF Spokane 13.43	Round Lake	Yes	US95 465.12
Sector 7B Sagle (North)	US95 471.08	BNSF Spokane 6.7	Bottle Bay Bridge	No	on site
	US95 472.98	MRL4 4.89	Sourdough Point Water Intake	Yes	US95 472.98

Preliminary Draft for Agency Review

Cardboard
Sector 1

Preliminary Draft for Agency Review

This page intentionally blank

Preliminary Draft for Agency Review

Sector & Map	Site ID & Highway Milepost	Railroad Milepost	Site Name	Accessible by boat at Low Water?	Nearest Boat Ramp or Staging Area
Sector 1A West Pend Oreille	US2 0.3 0	POVA 1430.86	Oldtown Boat Launch	Yes	US2 0.37
	US2 2.0	POVA 1428.59	Albeni Falls Dam	Uncertain	US2 0.37
	US2 2.21	POVA 1428.66	Albeni Cove Recreation Area	No	US2 2.21
Sector 1B West Pend Oreille Fire District	US2 5.73	POVA 1424.79	10th St Surface Water	Uncertain	US2 6.87
	US2 6.2	POVA 1424.31	Priest River- South	No	US2 6.38
	US2 6.38	POVA 1424.13	Priest River City Water Intake	Yes	US2 6.38
	US2 6.87	POVA 1423.64	Priest River Mouth	Yes	US2 6.87
	US2 7.59	POVA 1423.0	Priest River Mouth Slough	Unlikely	US2 6.87
	US2 10.19	POVA 1420.46	Carey Creek Game Management Area	Unlikely	US2 6.38
	US2 10.52	POVA 1420.12	Baylor Lane Slough	No	US2 13.49

Preliminary Draft for Agency Review

Sector 1A West Pend Oreille Fire District

Go Back to Regional Map

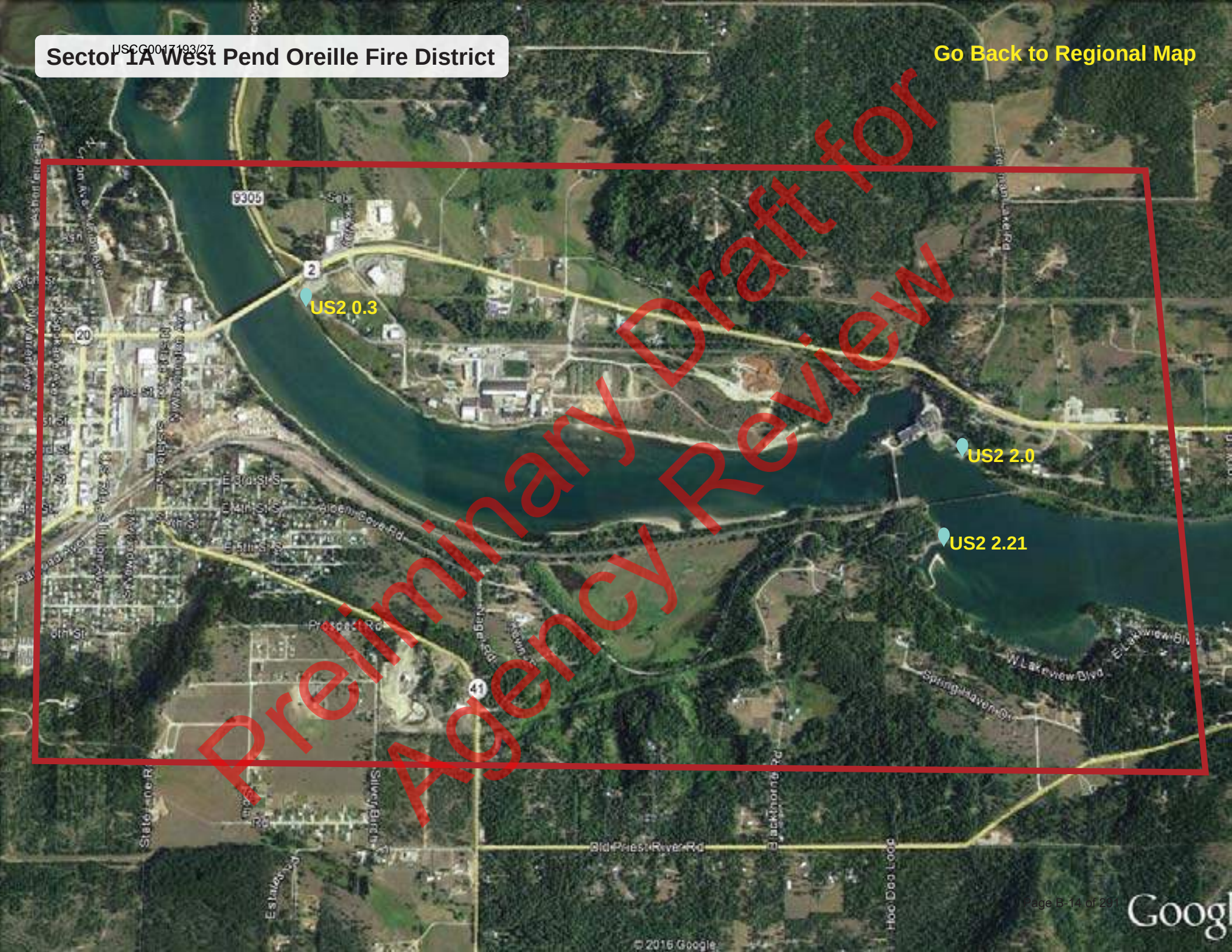

Preliminary Draft for Agency Review

Sector 1B West Pend Oreille Fire District

Go Back to Regional Map

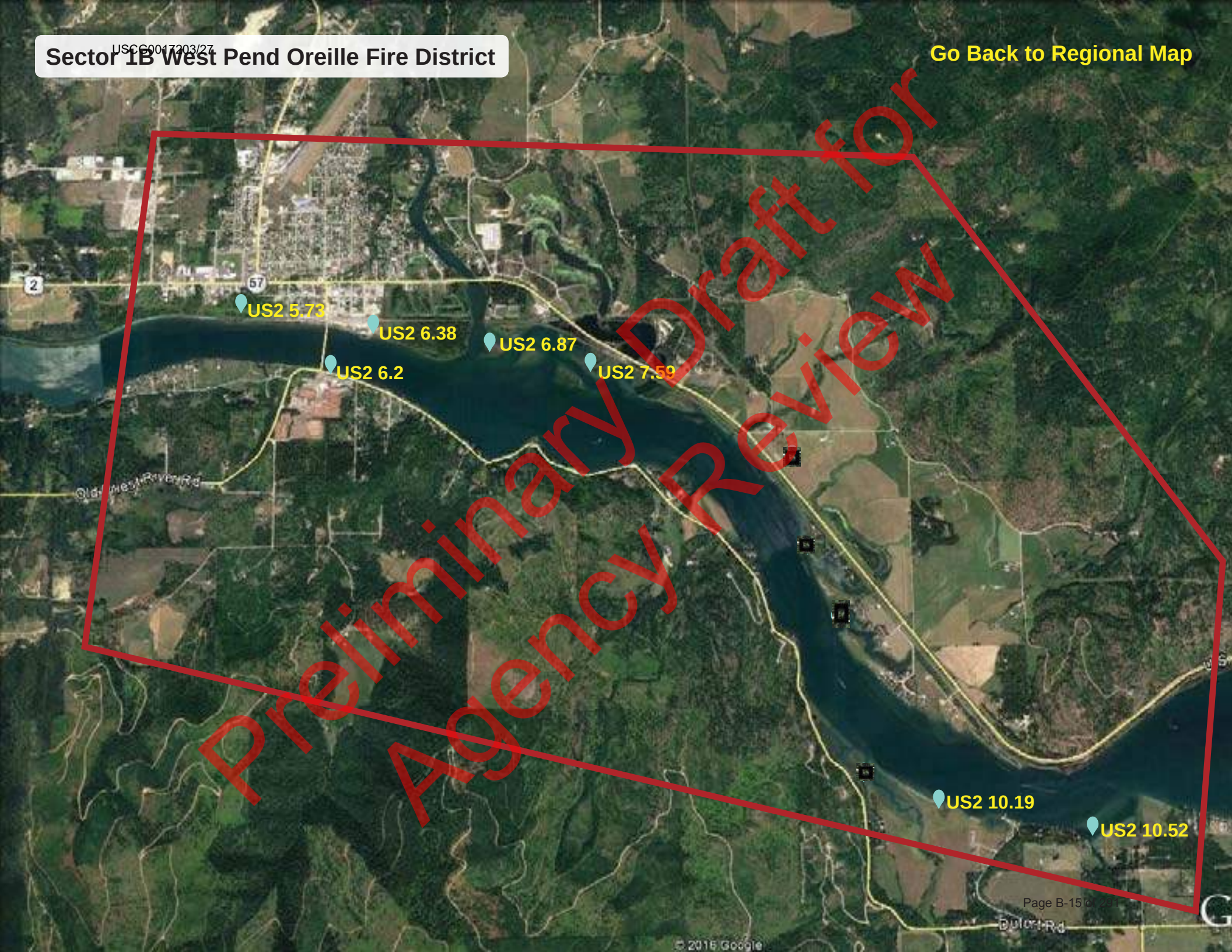

Preliminary Draft for Agency Review

Site Lat Long:	48.185324 -117.031909 (http://www.google.com/maps/place/48.185324,-117.031909)
Strategy Objective:	Notification and contaminant collection and recovery.
Implementation:	Pend Oreille River flow direction is to the northwest. Deploy collection boom and initiate contaminant recovery at Oldtown. Secure upstream end of boom River Left to tree. Secure downstream end of boom River Right to steel post. Vacuum truck access is good. Notify City of Oldtown.
Site Safety Note:	Complete Job Safety Analysis.
Staging Area:	On site staging is large. Large parking area for vehicles and equipment adjacent to boat ramp. Concrete boat launch. Oldtown boat launch is on site.
Field Notes:	• 4WD Access: **NO** • Seasonal Access Only: **NO** • Locked Gate: **NO**
Resources Targeted:	Bull Trout Critical Habitat, downstream municipal and irrigation water supplies, wildlife habitat, recreation.
Watercourse:	Lake Pend Oreille: gradient is low; substrate is sand; approx. width is 1000 ft.; approx. depth is 10 to 20 feet; channelized; slow moving.

Suggested Equipment

Quantity	Description
1500 ft.	Curtain Boom Tow Bridles
As Appropriate	Portable Skimmer; Vacuum Truck
2000 ft.	Polypropylene Line
9	Steel Post Anchors
As Appropriate	Post pounder, shovels, knife, wood saw
3	In Water Anchors
As Appropriate	PFD work vests/rubber boots
As Appropriate	Throw bags, first aid kit
Jet boat/raft needed for strategy implementation?	Y

Suggested Personnel

Quantity	Title (Function)
1	Booming Team Leader
1	Safety Representative
3 / 0	Haz-Mat Tech (Field Worker) / 1st Responder (Traffic Flagger)
1 / 1	Haz-Mat Tech (Boat Operator) / Haz-Mat Tech (Swiftwater)

Preliminary Draft for Agency Review

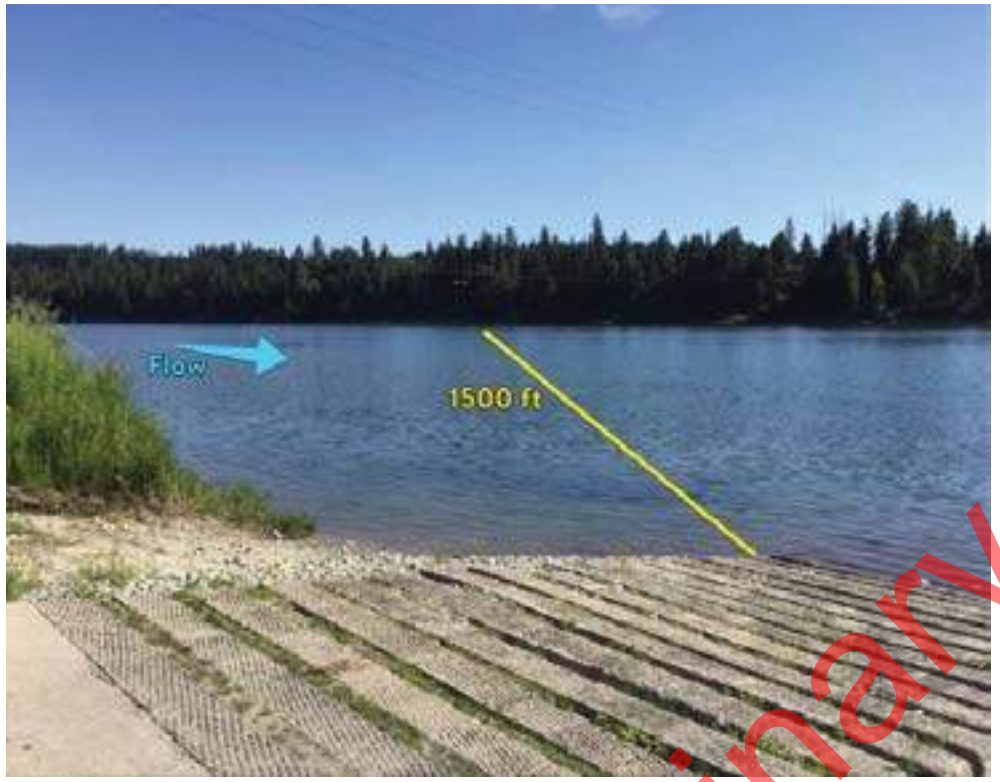

Nearest Cache: Sandpoint (27.8 miles)
Second Cache: Bonners (61.2 miles)

Nearest Address: 68 Rd Old Diamond Mill
Oldtown ID 83822

Site-Specific Points of Contact

Site Access

Sandpoint, Idaho

1. Head south on N Fifth Ave toward Cedar St. - 0.2 mi
2. Turn right onto US 2 W/Pine St - 27.8 mi
3. Turn left at Selkirk Way - 151 ft
4. Turn right onto Old Diamond Mill Rd - 0.3 mi

Preliminary Draft for Agency Review

View from boat ramp and collection point looking upstream toward River left anchor.

Boat ramp.

Preliminary Draft for Agency Review

Site Lat Long:	48.179406 -116.996052 (http://www.google.com/maps/place/48.179406,-116.996052)
Strategy Objective:	Notification and contaminant collection and recovery.
Implementation:	Pend Oreille RIver flow direction is to the west. Deploy collection boom and initiate contaminant recovery at Albeni Falls Dam. Secure upstream end of boom River Left to steel post. Secure downstream end of boom River Right to steel post. Vacuum truck access is good.
Site Safety Note:	Complete Job Safety Analysis.
Staging Area:	On site staging is large. Large parking area near dam ranger station for vehicles and equipment. No boat ramp onsite. No boat launch facilities. Oldtown boat launch is 2.3 miles away.
Field Notes:	• Use Albeni Cove Recreation Area Boat Ramp to implement strategy. • 4WD Access: **NO** • Seasonal Access Only: **NO** • Locked Gate: **NO**
Resources Targeted:	Albeni Falls Dam, Bull Trout Critical Habitat, downstream municipal and irrigation water supplies, wildlife habitat, recreation.
Watercourse:	Lake Pend Oreille: gradient is low; substrate is mud; approx. width is 1000 ft.; approx. depth is 10 to 20 feet; channelized; slow moving.

Suggested Equipment	
Quantity	Description
1200 ft.	Curtain Boom Tow Bridles
As Appropriate	Portable Skimmer; Vacuum Truck
1500 ft.	Polypropylene Line
12	Steel Post Anchors
As Appropriate	Post pounder, shovels, knife, wood saw
3	In Water Anchors
As Appropriate	PFD work vests/rubber boots
As Appropriate	Throw bags, first aid kit
Jet boat/raft needed for strategy implementation?	Y

Suggested Personnel	
Quantity	Title (Function)
1	Booming Team Leader
1	Safety Representative
3 / 0	Haz-Mat Tech (Field Worker) / 1st Responder (Traffic Flagger)
1 / 1	Haz-Mat Tech (Boat Operator) / Haz-Mat Tech (Swiftwater)

Preliminary Draft for Agency Review

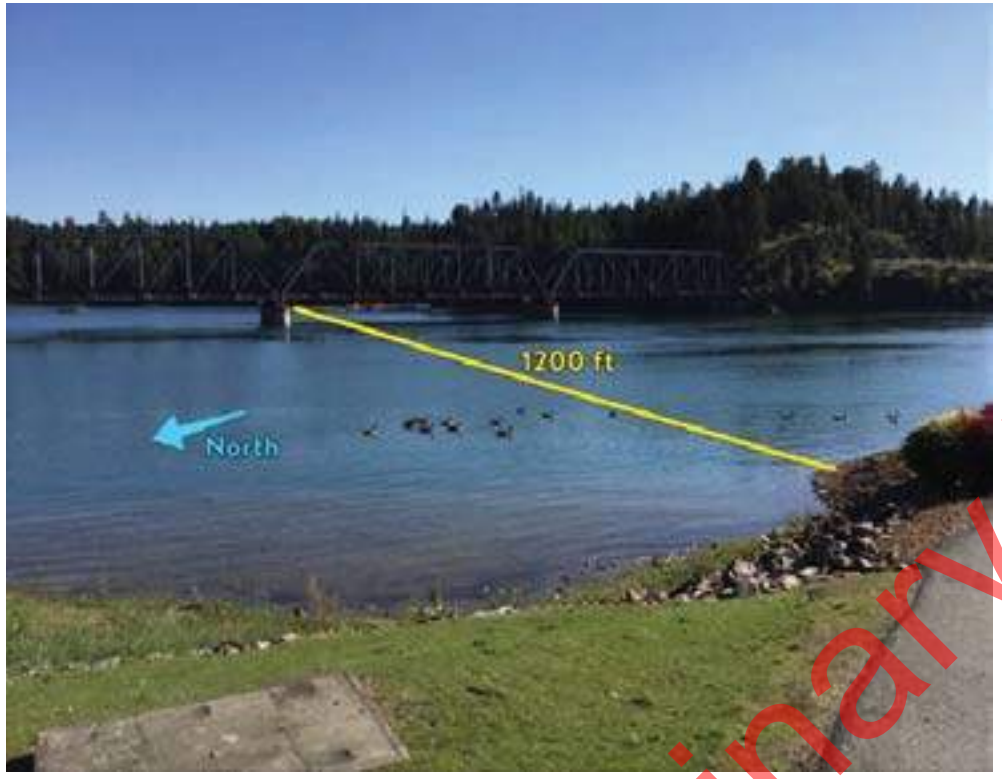

Nearest Cache: Sandpoint (26.0 miles)
Second Cache: Bonners (59.4 miles)

Nearest Address: 2289 Highway 2
Oldtown ID 83822

Site-Specific Points of Contact

Site Access

Sandpoint, ID

1. Head south on N Fifth Ave toward Cedar St - 0.2 mi
2. Turn right onto US-2 W/Pine St - 26.0 mi
3. Turn left 0.3 mi

Albeni Falls Dam, Idaho

Preliminary Draft for Agency Review

Looking upstream towards River left anchors from collection point.

View of lower parking area with good vac truck access.

Preliminary Draft for Agency Review

Site Lat Long:	48.176484 -116.997298 (http://www.google.com/maps/place/48.176484,-116.997298)
Strategy Objective:	Notification and contaminant collection and recovery.
Implementation:	Lake Pend Oreille flow direction is to the west. Deploy collection boom and initiate contaminant recovery at Albeni Cove Recreation Area. Vacuum truck access is good.
Site Safety Note:	Complete Job Safety Analysis.
Staging Area:	On site staging is large. Large paved parking area for vehicles and equipment adjacent to boat ramp. Onsite boat ramp. Concrete boat launch. Albeni Cove boat launch is on site.
Field Notes:	• Recreation area gate locked from 2200-0700. Sheriff Deputies and Campground Host have keys. • Seasonal Boat Ramp • 4WD Access: **NO** • Seasonal Access Only: **NO** • Locked Gate: **YES**
Resources Targeted:	Albeni Falls Dam, Bull Trout Critical Habitat, downstream municipal and irrigation water supplies, recreation, wildlife habitat.
Watercourse:	Lake Pend Oreille: gradient is low; substrate is sand; approx. width is 1000 ft.; approx. depth is 10 to 20 feet; channelized; slow moving.

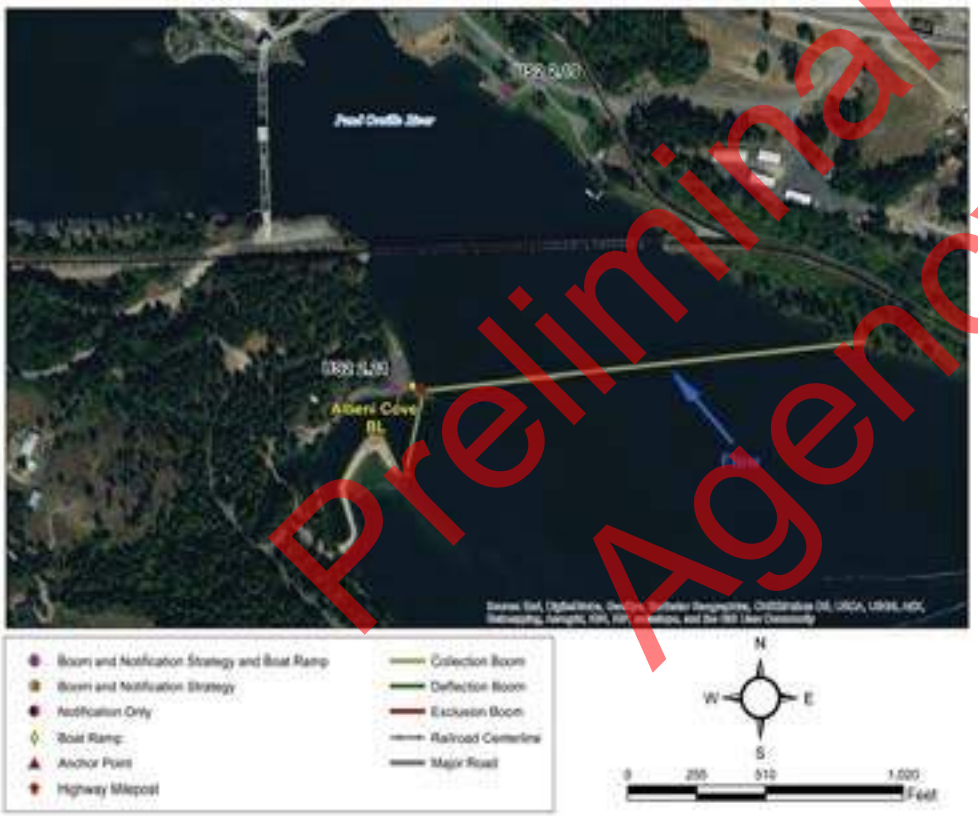

Suggested Equipment	
Quantity	Description
2200 ft.	Curtain Boom Tow Bridles
As Appropriate	Portable Skimmer; Vacuum Truck
2800 ft.	Polypropylene Line
24	Steel Post Anchors
As Appropriate	Post pounder, shovels, knife, wood saw
4	In Water Anchors
As Appropriate	PFD work vests/rubber boots
As Appropriate	Throw bags, first aid kit
Jet boat/raft needed for strategy implementation?	Y

Suggested Personnel	
Quantity	Title (Function)
1	Booming Team Leader
1	Safety Representative
3 / 0	Haz-Mat Tech (Field Worker) / 1st Responder (Traffic Flagger)
1 / 1	Haz-Mat Tech (Boat Operator) / Haz-Mat Tech (Swiftwater)

Preliminary Draft for Agency Review

Nearest Cache: Sandpoint (28.7 miles)
Second Cache: Bonners (62.1 miles)

Nearest Address: 741 Blackthorn Rd
Oldtown ID 83822

Site-Specific Points of Contact

Need phone number for on-Site recreation manager.

Site Access

Sandpoint, Idaho

1. Head south on N Fifth Ave toward Cedar St - 0.2 mi
2. Turn right onto US-2 W/Pine St - 22.2 mi
3. Turn left onto Wisconsin St - 0.4 mi
4. Turn right onto OId Priest River Rd - 5.0 mi
5. Turn right onto Blackthorne Rd - 0.8 mi
6. Turn left to stay on Blackthorne Rd - 459 ft
7. Continue straight onto Albeni Cove Rd - 0.3 mi
8. Sharp left - 161 ft

Preliminary Draft for Agency Review

Looking east toward upstream anchor from collection point near boat ramp.

View of the boat ramp and parking area.

Preliminary Draft for Agency Review

Site Lat Long:	48.177608 -116.918308 (http://www.google.com/maps/place/48.177608,-116.918308)
Strategy Objective:	Notification and exclusion. Prevent contaminant from impacting sensitive area at 10th St Surface Water.
Implementation:	Prevent contaminant from impacting sensitive area at 10th St Surface Water. Secure upstream end of boom River Right to tree. Secure downstream end of boom River Right to tree.
Site Safety Note:	Complete Job Safety Analysis.
Staging Area:	No staging area. Boat access only. No boat launch facilities. Priest River Mouth boat launch is 1.3 miles away.
Field Notes:	• 4WD Access: **NO** • Seasonal Access Only: **NO** • Locked Gate: **NO**
Resources Targeted:	Town drain pipe.
Watercourse:	Pend Oreille: gradient is low; substrate is sand; approx. width is 1125 ft.; approx. depth is 10 to 20 feet; channelized; slow moving.

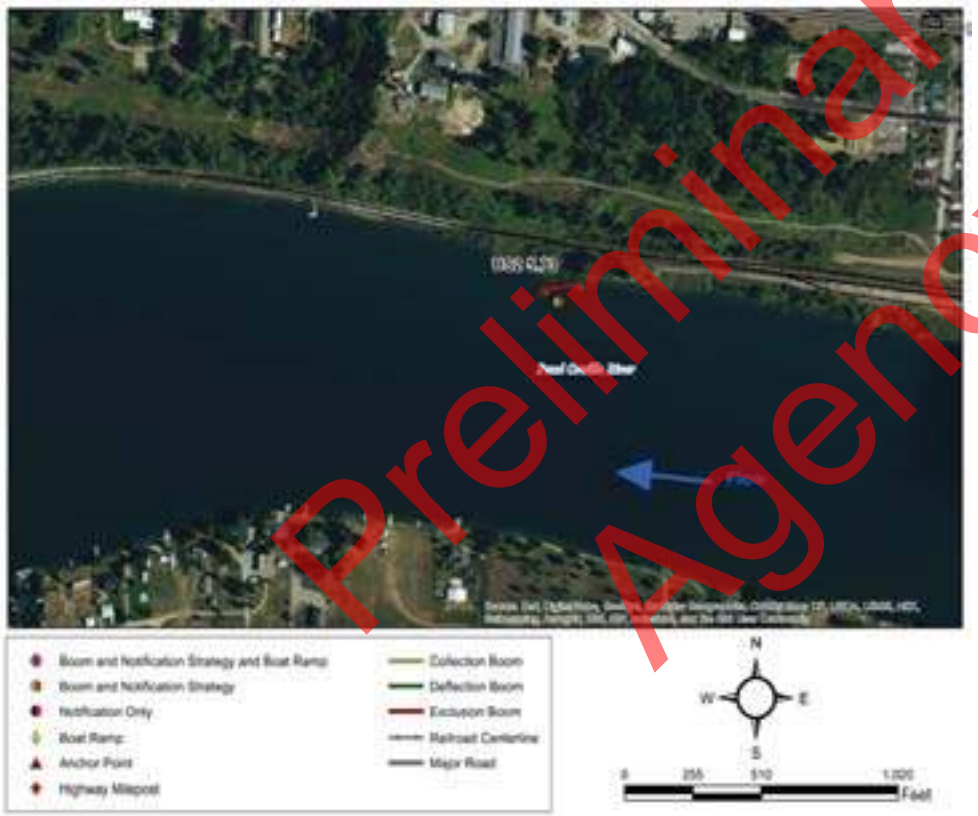

Suggested Equipment	
Quantity	Description
150 ft.	Curtain Boom Tow Bridles
As Appropriate	
200 ft.	Polypropylene Line
24	Steel Post Anchors
As Appropriate	Post pounder, shovels, knife, wood saw
1	In Water Anchors
As Appropriate	PFD work vests/rubber boots
As Appropriate	Throw bags, first aid kit
Jet boat/raft needed for strategy implementation?	Y

Suggested Personnel	
Quantity	Title (Function)
1	Booming Team Leader
1	Safety Representative
2 / 0	Haz-Mat Tech (Field Worker) / 1st Responder (Traffic Flagger)
1 / 1	Haz-Mat Tech (Boat Operator) / Haz-Mat Tech (Swiftwater)

Preliminary Draft for Agency Review

Nearest Cache: Sandpoint (22.5 miles)
Second Cache: Bonners (55.9 miles)

Nearest Address: 5678 US 2
Priest River ID 83856

Site-Specific Points of Contact

Site Access

Sandpoint, Idaho

1. Head south on N Fifth Ave toward Cedar St - 0.2 mi
2. Turn right onto US-2 W/Pine St - 22.2 mi
3. Turn left onto Wisconsin St - 0.2 mi
4. Turn left onto Railroad Ave - 394 ft

Railroad Avenue, Priest River, Idaho

Preliminary Draft for Agency Review

Looking downriver at exclusion point, facing Northwest.

Looking at the exclusion point facing North.

Preliminary Draft for Agency Review

Site Lat Long:	48.174342 -116.908027 (http://www.google.com/maps/place/48.174342,-116.908027
Strategy Objective:	Notification and contaminant collection and recovery.
Implementation:	Lake Pend Oreille flow direction is to the west. Deploy collection boom and initiate contaminant recovery at Priest River Alternate. Secure upstream end of boom River Right to steel post. Secure downstream end of boom River Left to rock. Vacuum truck access is poor.
Site Safety Note:	Complete Job Safety Analysis.
Staging Area:	On site staging is small. Small pullout on north side of road on river left. Limited parking on narrow shoulder. No boat launch facilities. Priest River City boat launch is 0.5 miles away.
Field Notes:	• Use Priest River Boat Ramp for strategy placement. • 4WD Access: **NO** • Seasonal Access Only: **NO** • Locked Gate: **NO**
Resources Targeted:	Bull Trout critical habitat, Albeni Falls Dam, wildlife habitat, municipal and irrigation water supplies, recreation.
Watercourse:	Lake Pend Oreille: gradient is low; substrate is sand; approx. width is 1125 ft.; approx. depth is 10 to 20 feet; channelized; slow moving.

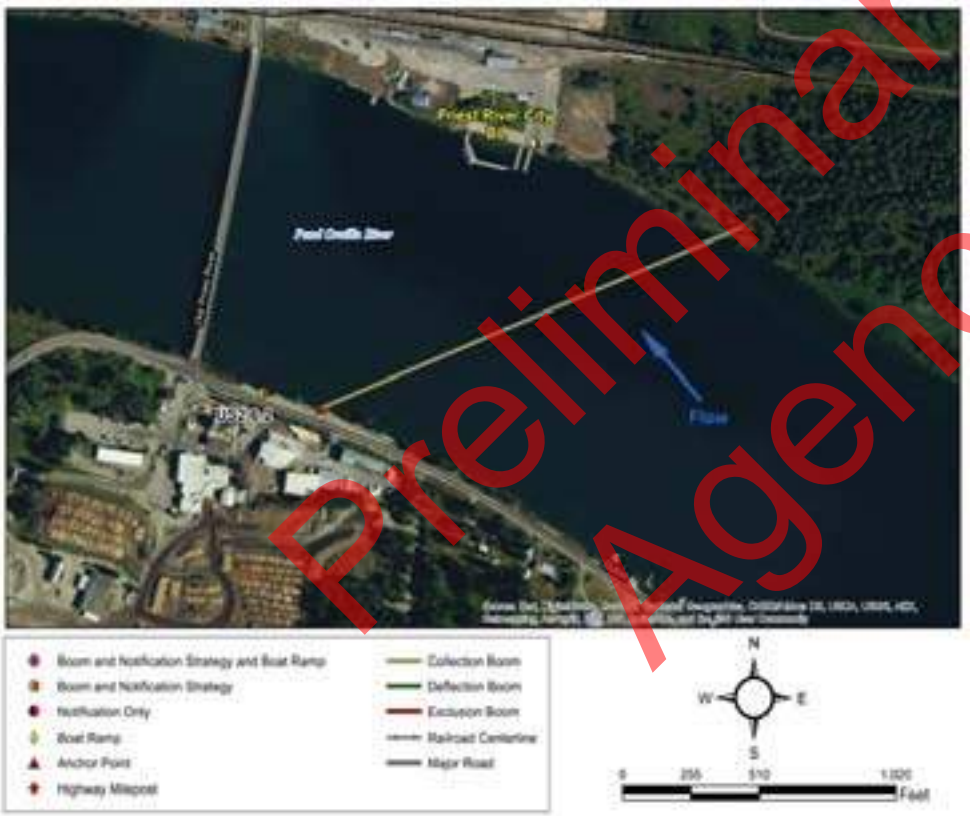

Suggested Equipment	
Quantity	Description
1600 ft.	Curtain Boom Tow Bridles
As Appropriate	Vacuum Truck; Portable Skimmer
2000 ft.	Polypropylene Line
12	Steel Post Anchors
As Appropriate	Post pounder, shovels, knife, wood saw
3	In Water Anchors
As Appropriate	PFD work vests/rubber boots
As Appropriate	Throw bags, first aid kit
Jet boat/raft needed for strategy implementation?	Y

Suggested Personnel	
Quantity	Title (Function)
1	Booming Team Leader
1	Safety Representative
3 / 0	Haz-Mat Tech (Field Worker) / 1st Responder (Traffic Flagger)
1 / 1	Haz-Mat Tech (Boat Operator) / Haz-Mat Tech (Swiftwater)

Preliminary Draft for Agency Review

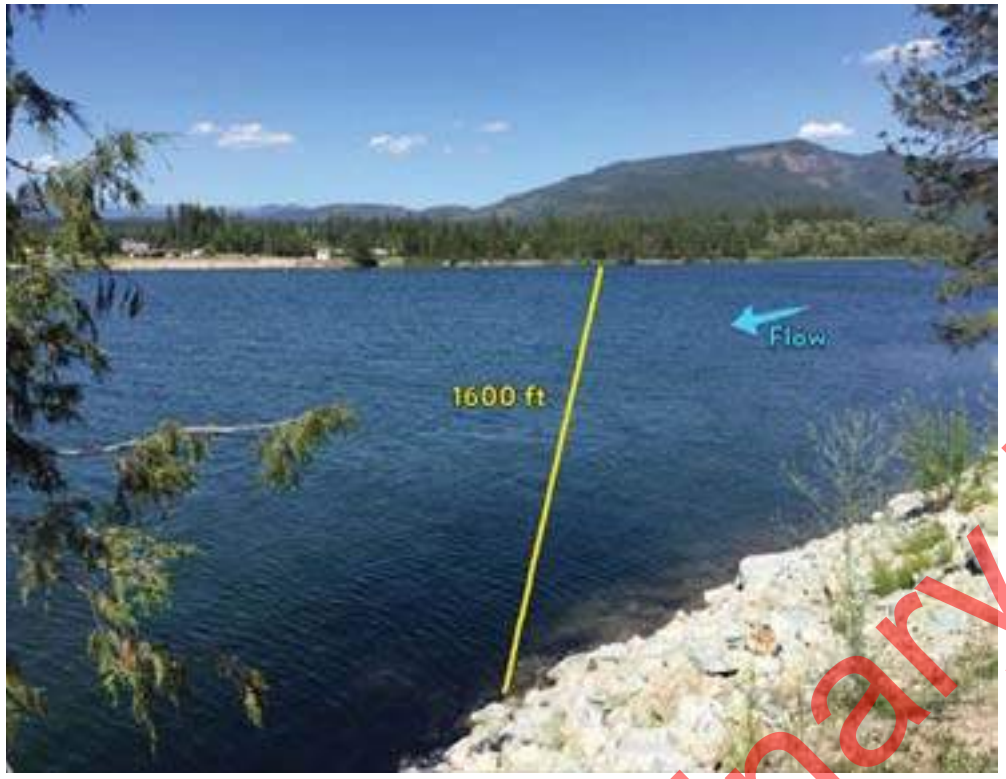

Nearest Cache: Sandpoint (22.4 miles)
Second Cache: Bonners (55.9 miles)

Nearest Address: 17728 Dufort Road
Priest River ID 83856

Site-Specific Points of Contact

Site Access

Sandpoint, Idaho

1. Head south on N Fifth Ave toward Cedar St - 0.2 mi
2. Turn right onto US-2 W/Pine St- 22.2 mi
3. Turn left onto Wisconsin St- 0.4 mi
4. Turn right onto Dufort Rd- 276 ft

Priest River, Idaho

Preliminary Draft for Agency Review

Looking upstream from River left collection point. Note the 20 foot rock bank down to water level.

Looking at the exclusion point facing North.

Preliminary Draft for Agency Review

Site Lat Long:	48.176514 -116.904111 (http://www.google.com/maps/place/48.176514,-116.904111)
Strategy Objective:	Notification and exclusion. Prevent contaminant from impacting sensitive area at Priest River City Water Intake .
Implementation:	Pend Oreille river flow direction is to the west. Secure upstream end of boom North Shoreline to steel post. Secure downstream end of boom Midstream to buoy. Vacuum truck access is good. Notify Priest River Intake.
Site Safety Note:	Complete Job Safety Analysis.
Staging Area:	On site staging is large. Large city park with large parking area and turnaround. Concrete boat launch. Priest River City boat launch is at site.
Field Notes:	• Popular recreation site during summer months. • 4WD Access: **NO** • Seasonal Access Only: **NO** • Locked Gate: **NO**
Resources Targeted:	Public water supply
Watercourse:	Lake Pend Oreille: gradient is low; substrate is gravel; approx. depth is over 20 feet; slow moving

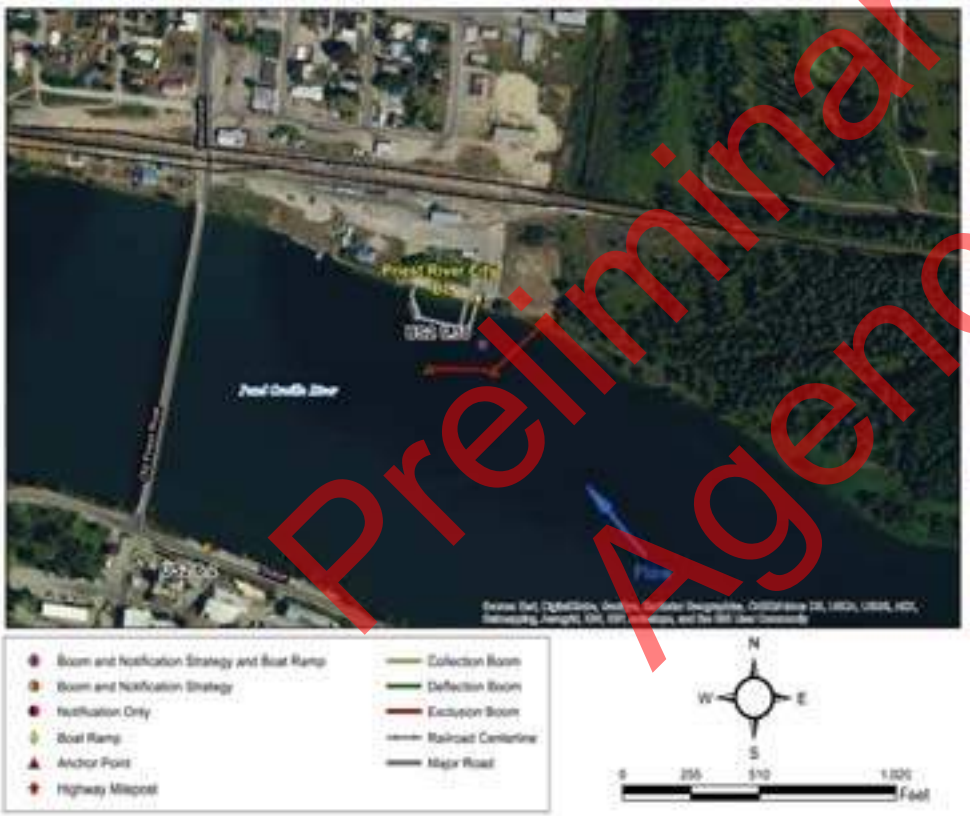

Suggested Equipment	
Quantity	Description
550 ft.	Curtain Boom Tow Bridles
As Appropriate	
700 ft.	Polypropylene Line
4	Steel Post Anchors
As Appropriate	Post pounder, shovels, knife, wood saw
1	In Water Anchors
As Appropriate	PFD work vests/rubber boots
As Appropriate	Throw bags, first aid kit
Jet boat/raft needed for strategy implementation?	Y

Suggested Personnel	
Quantity	Title (Function)
1	Booming Team Leader
1	Safety Representative
2 / 0	Haz-Mat Tech (Field Worker) / 1st Responder (Traffic Flagger)
1 / 1	Haz-Mat Tech (Boat Operator) / Haz-Mat Tech (Swiftwater)

Preliminary Draft for Agency Review

Nearest Cache: Sandpoint (22.4 miles)
Second Cache: Bonners (55.8 miles)

Nearest Address: Railroad Avenue
Priest River ID 83856

Site-Specific Points of Contact

Chris Carr (208) 448-2123

Site Access

Sandpoint, Idaho

1. Head south on N Fifth Ave toward Cedar St - 0.2 mi
2. Turn right onto US-2 W/Pine St - 22.2 mi
3. Turn left onto Wisconsin St - 0.2 mi
4. Turn left onto Railroad Ave - 394 ft

Railroad Avenue, Priest River, Idaho

Preliminary Draft for Agency Review

Looking North at boat ramp

Looking south at staging area

Preliminary Draft for Agency Review

Site Lat Long:	48.177538 -116.893301 (http://www.google.com/maps/place/48.177538,-116.893301)
Strategy Objective:	Notification and exclusion. Prevent contaminant from highway spill entering storm system and Pend Oreille River.
Implementation:	Priest River flow direction is to the south. Secure upstream end of boom River Left to bridge piling. Secure downstream end of boom River Right to bridge piling.
Site Safety Note:	Complete Job Safety Analysis.
Staging Area:	On site staging is large. Concrete parking lot, boat ramp, and grass field. Priest River Mouth boat launch is at site.
Field Notes:	• 4WD Access: **NO** • Seasonal Access Only: **NO** • Locked Gate: **NO**
Resources Targeted:	Recreation, Threatened and Endangered Species
Watercourse:	Priest River: gradient is low; substrate is sand; approx. width is 295 ft.; approx. depth is over 20 feet; slow moving

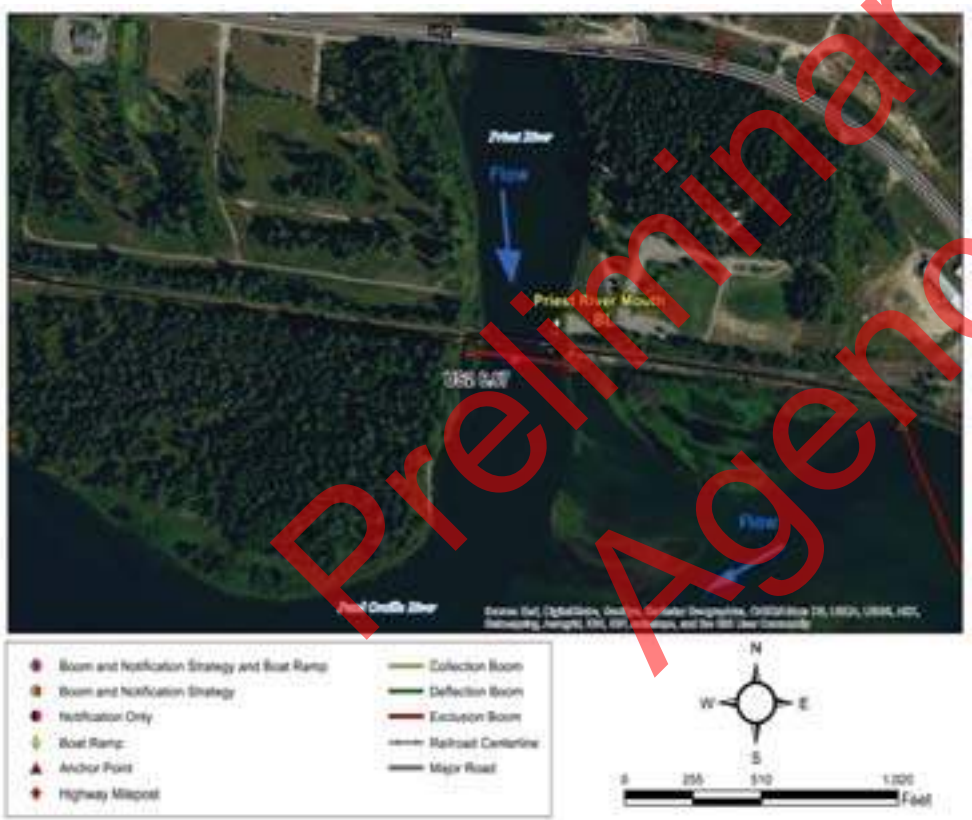

Suggested Equipment	
Quantity	Description
400 ft.	Curtain Boom Tow Bridles
As Appropriate	
500 ft.	Polypropylene Line
None	Steel Post Anchors
As Appropriate	Post pounder, shovels, knife, wood saw
None	In Water Anchors
As Appropriate	PFD work vests/rubber boots
As Appropriate	Throw bags, first aid kit
Jet boat/raft needed for strategy implementation?	Y

Suggested Personnel	
Quantity	Title (Function)
1	Booming Team Leader
1	Safety Representative
2 / 0	Haz-Mat Tech (Field Worker) / 1st Responder (Traffic Flagger)
1 / 1	Haz-Mat Tech (Boat Operator) / Haz-Mat Tech (Swiftwater)

Preliminary Draft for Agency Review

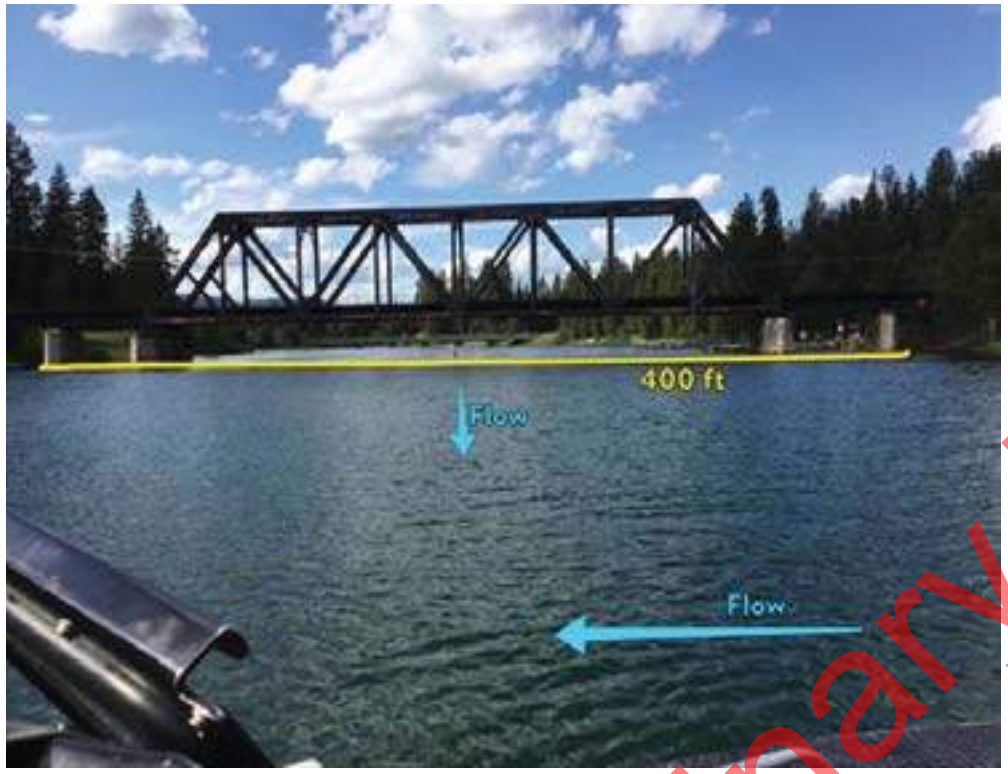

Nearest Cache: Sandpoint (21.3 miles)
Second Cache: Bonners (54.7 miles)

Nearest Address: 6552 Highway 2
Priest River ID 83856

Site-Specific Points of Contact

Site Access

Sandpoint, Idaho

1. Head south on N Fifth Ave toward Cedar St - 0.2 mi
2. Turn right onto US-2 W/Pine St - 21.4 mi
3. Destination will be on the left (look for signs for Priest River Park and Campground)

Priest River Park/Campground

Preliminary Draft for Agency Review

Mouth of the Priest River from the Pend Oreille River looking north

Looking at the staging area from the east

Preliminary Draft for Agency Review

Site Lat Long:	48.174057 -116.882533 (http://www.google.com/maps/place/48.174057,-116.882533)
Strategy Objective:	Notification and exclusion. Prevent contaminant from impacting sensitive area at Priest River Mouth Slough.
Implementation:	Lake Pend Oreille flow direction is to the west. Use two segments of boom to protect sensitive area. Secure upstream end of boom East Shoreline to steel post. Secure downstream end of boom West Shoreline to steel post. Secure upstream end of second boom East Shoreline to steel post. Secure downstream end of second boom West Shoreline to steel post.
Site Safety Note:	Complete Job Safety Analysis.
Staging Area:	No staging area. Priest River Mouth boat launch is 0.7 miles away.
Field Notes:	• Site is only accessible from Priest River boat launch • 4WD Access: **NO** • Seasonal Access Only: **Yes** • Locked Gate: **NO**
Resources Targeted:	Threatened and Endangered Species, Recreation
Watercourse:	Lake Pend Oreille: gradient is low; substrate is mud; approx. depth is 10 to 20 feet; slow moving

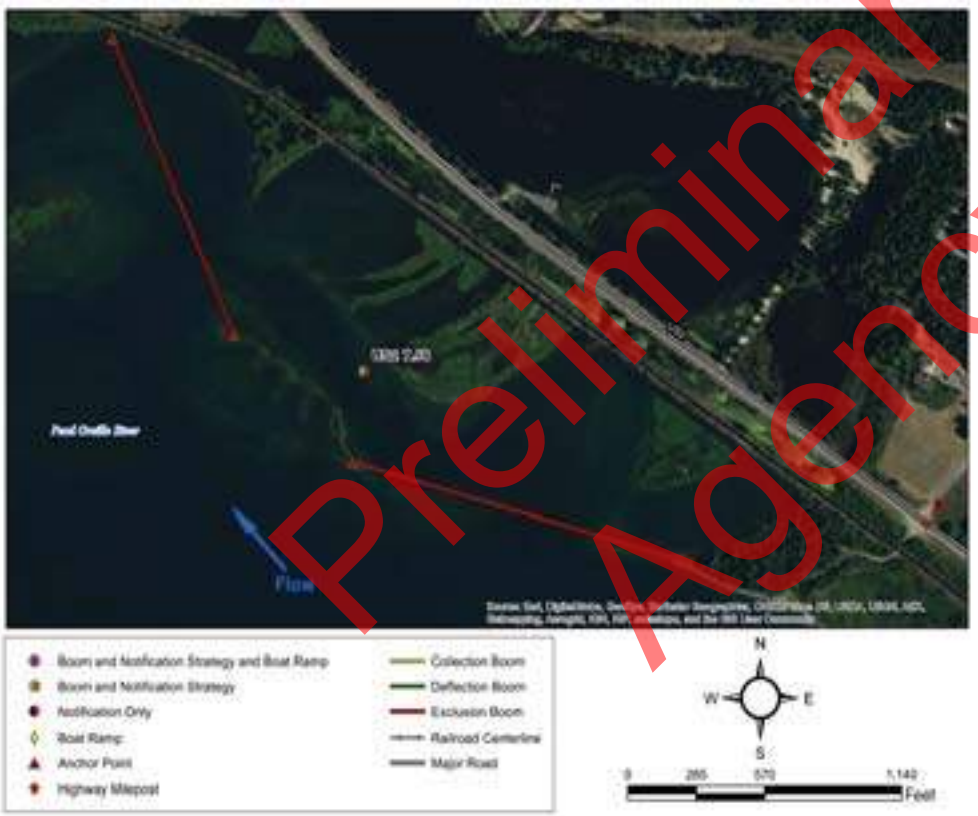

Suggested Equipment	
Quantity	Description
2800 ft.	Curtain Boom Tow Bridles
As Appropriate	
3500 ft.	Polypropylene Line
16	Steel Post Anchors
As Appropriate	Post pounder, shovels, knife, wood saw
None	In Water Anchors
As Appropriate	PFD work vests/rubber boots
As Appropriate	Throw bags, first aid kit
Jet boat/raft needed for strategy implementation?	Y

Suggested Personnel	
Quantity	Title (Function)
1	Booming Team Leader
1	Safety Representative
7 / 0	Haz-Mat Tech (Field Worker) / 1st Responder (Traffic Flagger)
1 / 1	Haz-Mat Tech (Boat Operator) / Haz-Mat Tech (Swiftwater)

Preliminary Draft for Agency Review

Nearest Cache: Sandpoint (20.6 miles)
Second Cache: Bonners (54.0 miles)

Nearest Address: 6552 Highway 2
Priest River ID 83856

Site-Specific Points of Contact

Site Access - Boat access, Use Priest River Mouth boat launch, directions below

Sandpoint, Idaho

1. Head south on N Fifth Ave toward Cedar St - 0.2 mi
2. Turn right onto US-2 W/Pine St - 22.2 mi
3. In the town of Priest River, ID, Turn left onto Wisconsin St- 0.2 mi
4. Turn left onto Railroad Ave

Priest River Park

Preliminary Draft for Agency Review

Looking upstream from island (anchor point 1A)toward anchor point 1B

Looking from the island (anchor point 2A) toward river right. (anchor point 2B)

Preliminary Draft for Agency Review

Carey Creek Game Management Area

Back to Sector Map Back to Summary Table (POVA 1420.46) **US2 10.19**

Site Lat Long:	48.145506 -116.849023 (http://www.google.com/maps/place/48.145506,-116.849023)
Strategy Objective:	Notification and deflection away from shoreline.
Implementation:	Lake Pend Oreille flow direction is to the west. Deflect contaminant moving downstream away from shoreline at Carey Creek Game Management Area. Secure upstream end of boom River Left to steel post. Secure downstream end of boom Midstream to buoy.
Site Safety Note:	Complete Job Safety Analysis.
Staging Area:	No staging area. Priest River City boat launch is 4.4 miles away.
Field Notes:	• Only accessible by boat from Priest River boat launch • 4WD Access: **None** Seasonal Access Only: **YES** Locked Gate: **None**
Resources Targeted:	Threatened and Endangered Species
Watercourse:	Lake Pend Oreille: gradient is low; substrate is mud; approx. depth is 10 to 20 feet; slow moving

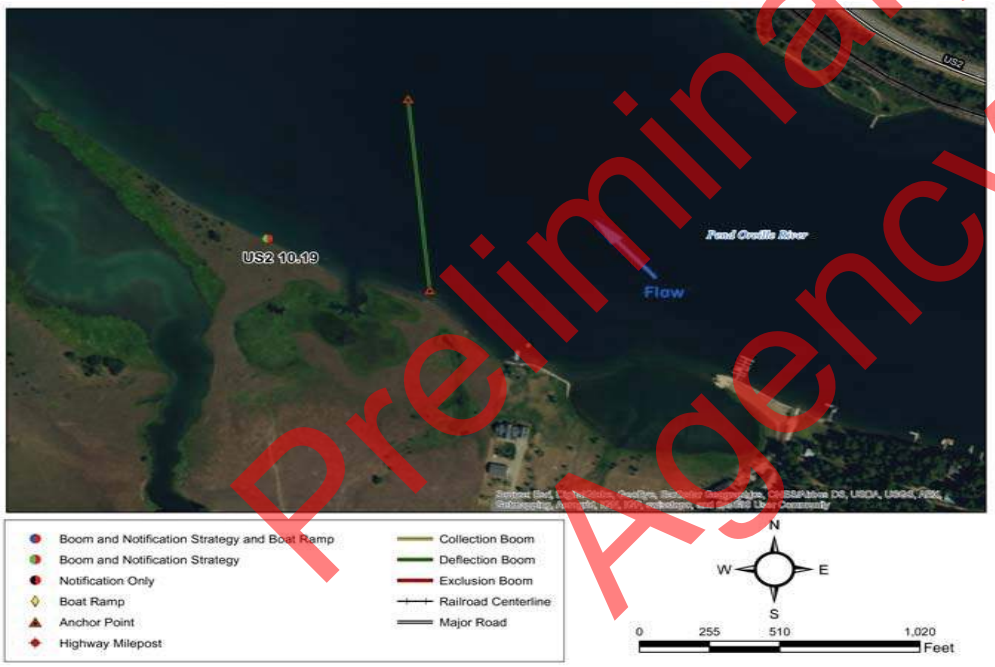

Suggested Equipment	
Quantity	Description
1100 ft.	Curtain Boom Tow Bridles
As Appropriate	
1500 ft.	Polypropylene Line
4	Steel Post Anchors
As Appropriate	Post pounder, shovels, knife, wood saw
1	In Water Anchors
As Appropriate	PFD work vests/rubber boots
As Appropriate	Throw bags, first aid kit
Jet boat/raft needed for strategy implementation?	Y

Suggested Personnel	
Quantity	Title (Function)
1	Booming Team Leader
1	Safety Representative
3 / None	Haz-Mat Tech (Field Worker) / 1st Responder (Traffic Flagger)
1 / 1	Haz-Mat Tech (Boat Operator) / Haz-Mat Tech (Swiftwater)

Visited on 2016-07-03

Preliminary Draft for Agency Review

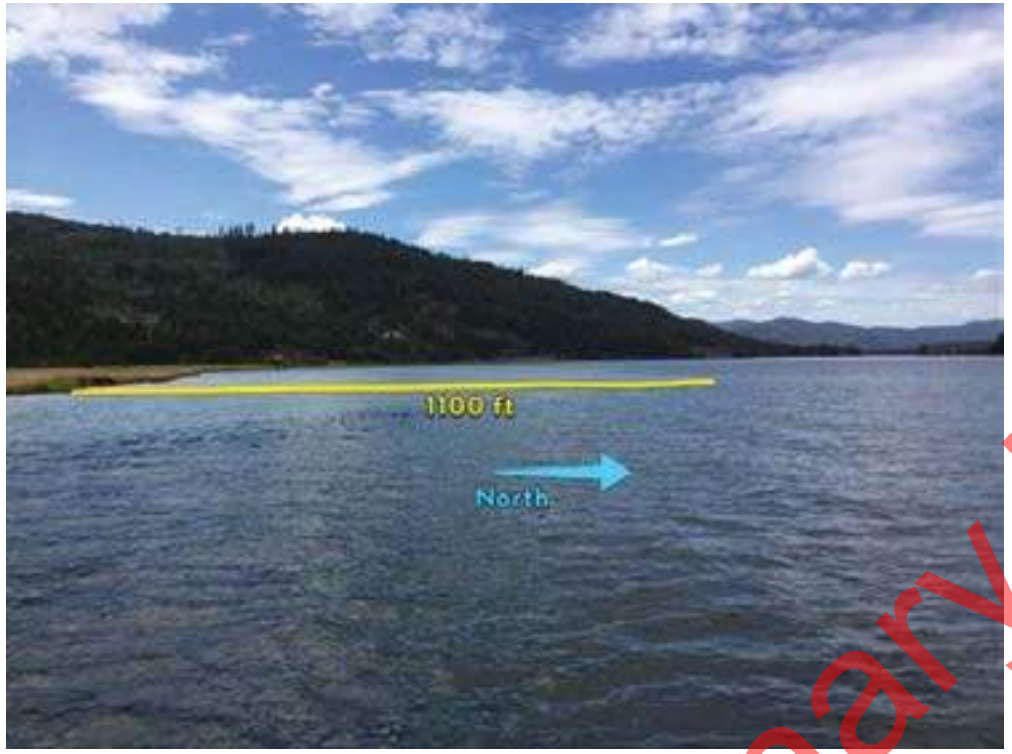

Nearest Cache: Sandpoint (26.4 miles)
Second Cache: Bonners (59.8 miles)

Nearest Address: 13943 Dufort Rd
Priest River ID 83856

Site-Specific Points of Contact

Site Access - Boat access, Use Priest River Mouth boat launch, directions below

Sandpoint, Idaho

1. Head south on N Fifth Ave toward Cedar St - 0.2 mi
2. Turn right onto US-2 W/Pine St - 22.2 mi
3. In the town of Priest River, ID, Turn left onto Wisconsin St- 0.2 mi
4. Turn left onto Railroad Ave

Priest River Park

Preliminary Draft for Agency Review

Looking southwest from the Pend Orellie River toward River left at the Carey Creek Wild life management Area

None

Preliminary Draft for Agency Review

Site Lat Long:	48.143044 -116.833326 (http://www.google.com/maps/place/48.143044,-116.833326)
Strategy Objective:	Notification and exclusion. Option A: deflect contamination in PO river from reaching banks. Option B: prevent Dufort Rd contamination from reaching river.
Implementation:	Lake Pend Oreille flow direction is to the west. Secure upstream end of boom River Left to steel post. Secure downstream end of boom River Left to steel post. Notify private land owner.
Site Safety Note:	Complete Job Safety Analysis. Probably inaccessible in low water.
Staging Area:	On site staging is large. Grass and sand lot west of the slough. No boat launch facilities. Priest River City boat launch is 6.1 miles away.
Field Notes:	• Private staging area see additional contacts in in notification box. • 4WD Access: **NO** Seasonal Access Only: **NO** Locked Gate: **NO**
Resources Targeted:	Baylor Ln. Slough wetlands
Watercourse:	Lake Pend Oreille: gradient is low; substrate is mud; approx. depth is 10 to 20 feet; slow moving

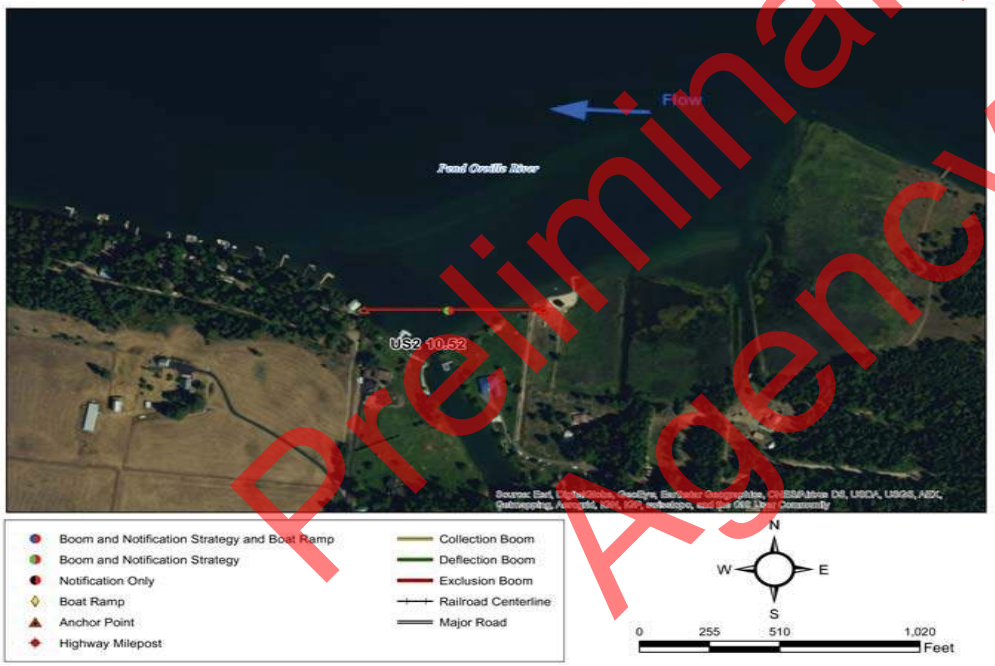

Suggested Equipment	
Quantity	Description
650 ft.	Curtain Boom Tow Bridles
As Appropriate	
800 ft.	Polypropylene Line
8	Steel Post Anchors
As Appropriate	Post pounder, shovels, knife, wood saw
2	In Water Anchors
As Appropriate	PFD work vests/rubber boots
As Appropriate	Throw bags, first aid kit
Jet boat/raft needed for strategy implementation?	Y

Suggested Personnel	
Quantity	Title (Function)
1	Booming Team Leader
1	Safety Representative
3 / 0	Haz-Mat Tech (Field Worker) / 1st Responder (Traffic Flagger)
1 / 1	Haz-Mat Tech (Boat Operator) / Haz-Mat Tech (Swiftwater)

Visited on 2016-07-02

Preliminary Draft for Agency Review

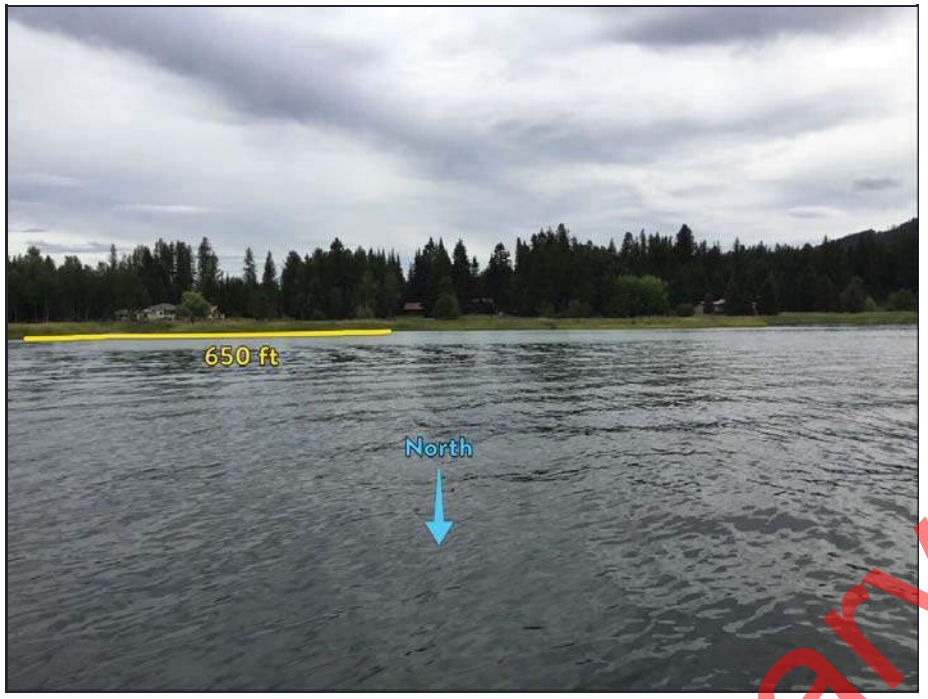

Nearest Cache: Sandpoint (28.1 miles)
Second Cache: Bonners (56.8 miles)

Nearest Address: 365 Baylor Ln
Priest River ID 83856

Site-Specific Points of Contact

Glenna Merrill, Land owner 208 437 3873

Site Access

Sandpoint, Idaho
1. Head south on N Fifth Ave toward Cedar St - 0.2 mi
2. Turn left onto Pine St - 0.3 mi
3. Turn right onto S 1st Ave - 0.2 mi
4. Turn left onto E Superior St - 0.5 mi
5. Merge onto US-95 S - 8.0 mi
6. Turn right onto Dufort Rd - 12.9 mi
7. Turn right onto Baylor Ln - 0.2 mi

Baylor Lane, Priest River, Idaho

Preliminary Draft for Agency Review

Baylor Ln Slough looking south from Pend Prielle River

Baylor Ln Slough staging area

Preliminary Draft for Agency Review

This page intentionally blank

Preliminary Draft for Agency Review

Cardboard
Sector 2

Preliminary Draft for Agency Review

This page intentionally blank

Preliminary Draft for Agency Review

Sector & Map	Site ID & Highway Milepost	Railroad Milepost		Accessible at Low Water?	Nearest Boat Ramp or Staging Area
Sector 2A Westside Fire District	US2 13.3	POVA 1417.28	Riley Creek Slough	No	US2 13.49
	US2 13.49	POVA 1417.06	Riley Creek Recreation Area	No	US2 13.49
	US2 14.37	POVA 1416.24	Laclede Public Water Supply	Yes	US2 14.37
	US2 16.06	UP Spokane RR 62.78	Cocolalla Creek Mouth	Unlikely	US2 14.37
	US2 16.29	UP Spokane RR 63.14	Morton Slough Boat Launch	No	US2 16.29
	US2 17.12	POVA 1413.35	Morton Slough Game Management Area	No	US2 14.37
Sector 2B Westside Fire District	US2 20.71	POVA 1409.86	Bay near Muskrat Lake	No	US95 470.21
	US2 24.89	BNSF Newport 71.01	Dover Bay Slough	No	US2 25.15
	US2 25.16	BNSF Newport 71.31	Dover Bay Marina	No	US2 25.15
	US2 25.63	BSF Newport 71.87	Dover Bay Water Intake	Yes	US2 25.15

Preliminary Draft for Agency Review

Sector 2A Westside Fire District

Go Back to Regional Map

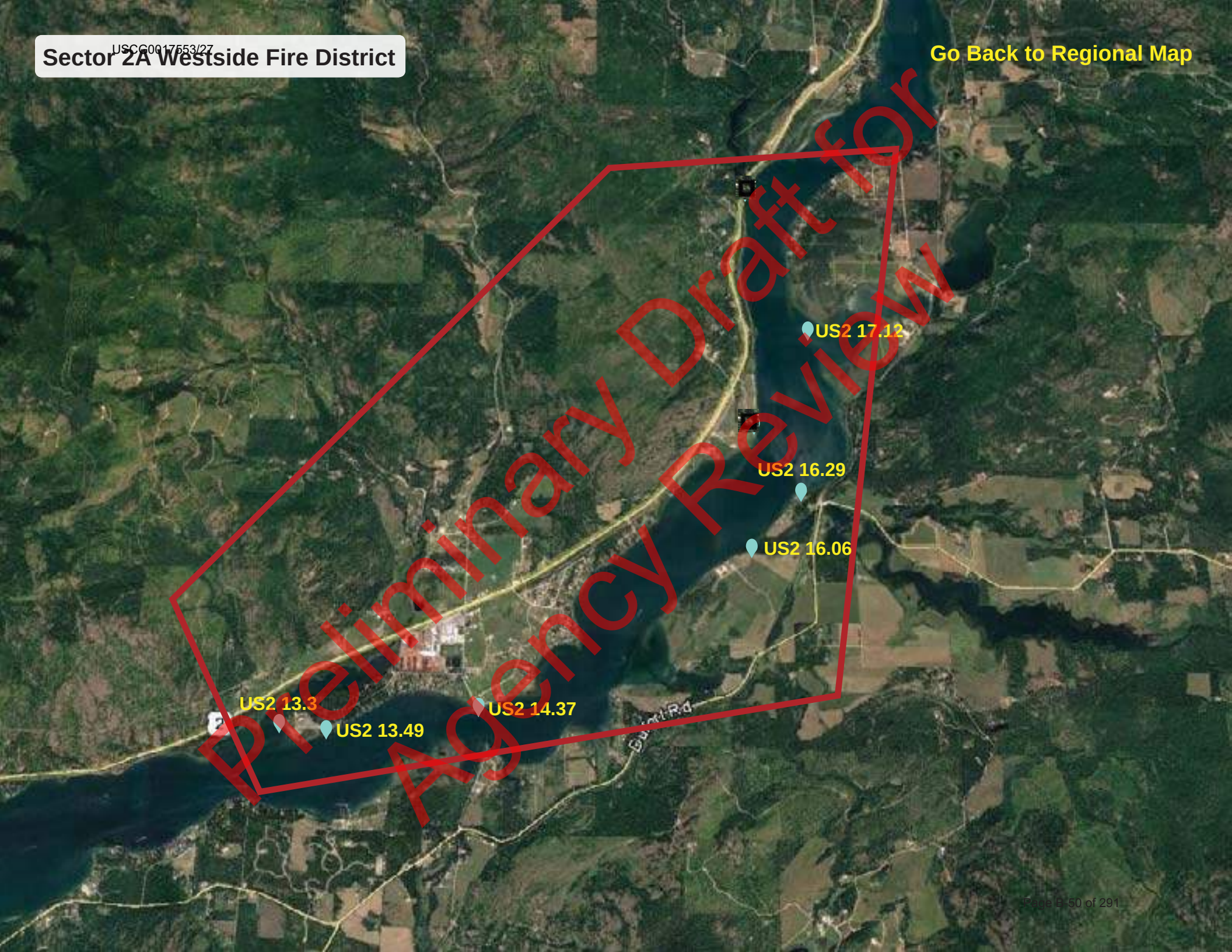

Sector 2B Westside Fire District

Go Back to Regional Map

Preliminary Draft for Agency Review

Site Lat Long:	48.160032 -116.778168 (http://www.google.com/maps/place/48.160032,-116.778168)
Strategy Objective:	Notification and contaminant collection and recovery.
Implementation:	Lake Pend Oreille flow direction is to the west. Deploy collection boom and initiate contaminant recovery at Riley Creek. Secure upstream end of boom to west shoreline. Secure downstream end of boom East Shoreline to steel post.
Site Safety Note:	Complete Job Safety Analysis.
Staging Area:	No staging area. Riley Creek boat launch is 0.2 miles away.
Field Notes:	• 4WD Access: NO • Seasonal Access Only: YES • Locked Gate: NO
Resources Targeted:	Wildlife Habitat, Threatened and Endangered Species, Recreational Use, Reservoir or Lake
Watercourse:	Lake Pend Oreille: gradient is low; substrate is mud; approx. depth is over 20 feet; slow moving

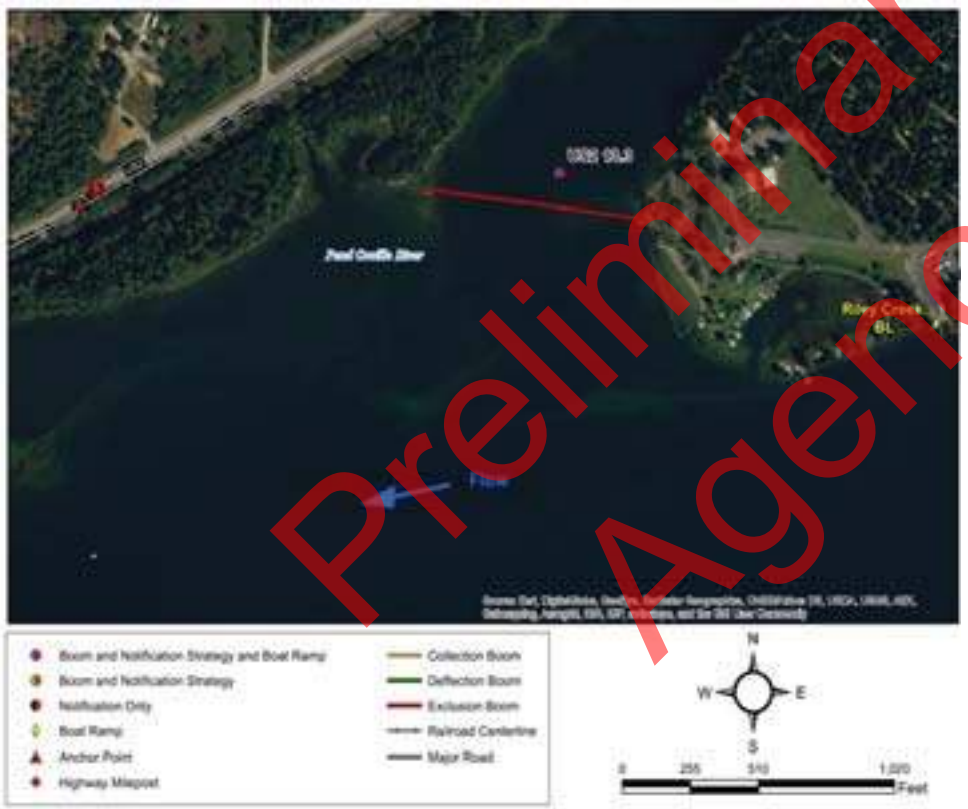

Suggested Equipment	
Quantity	Description
850 ft.	Curtain Boom Tow Bridles
As Appropriate	
1000 ft.	Polypropylene Line
No	Steel Post Anchors
As Appropriate	Post pounder, shovels, knife, wood saw
None	In Water Anchors
As Appropriate	PFD work vests/rubber boots
As Appropriate	Throw bags, first aid kit
Jet boat/raft needed for strategy implementation?	N

Suggested Personnel	
Quantity	Title (Function)
1	Booming Team Leader
1	Safety Representative
2 / 0	Haz-Mat Tech (Field Worker) / 1st Responder (Traffic Flagger)
1 / 1	Haz-Mat Tech (Boat Operator) / Haz-Mat Tech (Swiftwater)

Preliminary Draft for Agency Review

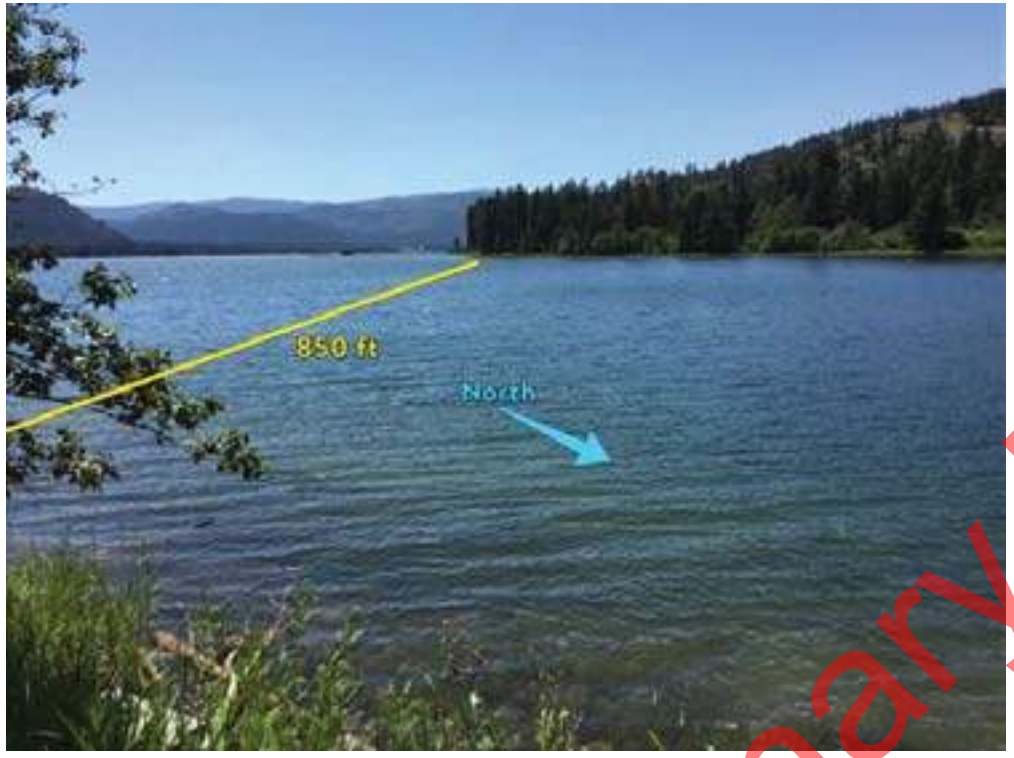

Nearest Cache: Sandpoint (15.1 miles)
Second Cache: Bonners (48.5 miles)

Nearest Address: 125 Willow Crk Rd
Priest River ID 83856

Site-Specific Points of Contact

Site Access

Sandpoint, Idaho

1. Head south on N Fifth Ave toward Cedar St. - 0.2 mi
2. Turn right onto US-2 W/Pine St - 13.8 mi
3. Turn left onto Riley Creek Rd - 0.4 mi
4. Turn right onto Riley Creek Park Rd - 0.8 mi

Riley Creek Park Drive, Priest River, Idaho

Preliminary Draft for Agency Review

Looking West at slough

None

Preliminary Draft for Agency Review

Site Lat Long:	48.159216 -116.772256 (http://www.google.com/maps/place/48.159216,-116.772256)
Strategy Objective:	Notification and contaminant collection and recovery.
Implementation:	Lake Pend Oreille flow direction is to the west. Deploy collection boom and initiate contaminant recovery at Riley Creek Recreation Area. Secure upstream end of boom Midstream to buoy. Secure downstream end of boom North Shoreline to steel post. Secure upstream end of second boom Midstream to boat. Secure downstream end of second boom Midstream to boat. Vacuum truck access is good.
Site Safety Note:	Complete Job Safety Analysis.
Staging Area:	On site staging is large. Large asphalt parking lot with large staging area. Concrete boat launch. Riley Creek boat launch is at site.
Field Notes:	• 4WD Access: **NO** Seasonal Access Only: **NO** Locked Gate: **NO**
Resources Targeted:	Recreation, Reservoir, Threatened and Endangered Species
Watercourse:	Lake Pend Oreille: gradient is low; substrate is mud; approx. depth is over 20 feet; slow moving

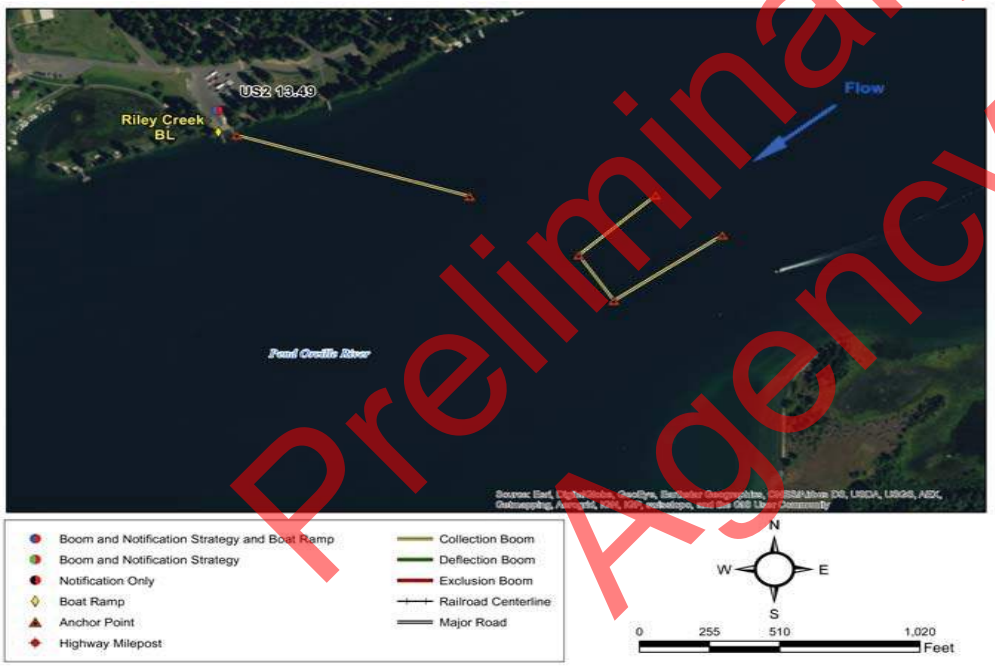

Suggested Equipment	
Quantity	Description
1000 ft.	Curtain Boom Tow Bridles
As Appropriate	Portable Skimmer; Vacuum Truck; Absorbent Boom
1250 ft.	Polypropylene Line
4	Steel Post Anchors
As Appropriate	Post pounder, shovels, knife, wood saw
3	In Water Anchors
As Appropriate	PFD work vests/rubber boots
As Appropriate	Throw bags, first aid kit
Jet boat/raft needed for strategy implementation?	Y

Suggested Personnel	
Quantity	Title (Function)
1	Booming Team Leader
1	Safety Representative
2 / 1	Haz-Mat Tech (Field Worker) / 1st Responder (Traffic Flagger)
2 / 2	Haz-Mat Tech (Boat Operator) / Haz-Mat Tech (Swiftwater)

Visited on 2016-06-30

Preliminary Draft for Agency Review

Nearest Cache: Sandpoint (14.9 miles)
Second Cache: Bonners (48.3 miles)

Nearest Address: 1097 Riley Crk Pk Dr
Priest River ID 83856

Site-Specific Points of Contact

Site Access

Sandpoint, ID

1. Head south on N Fifth Ave toward Cedar St - 0.2 mi
2. Turn right onto US-2 W/Pine St - 13.8 mi
3. Turn left onto Riley Creek Rd - 0.4 mi
4. Turn right onto Riley Creek Park Rd - 1.0 mi

Riley Creek Recreation Area, Laclede, Idaho

Preliminary Draft for Agency Review

Riley Creek Recreation Area boat launch

Riley Creek Recreation Area staging area

Preliminary Draft for Agency Review

Site Lat Long:	48.160811 -116.753563 (http://www.google.com/maps/place/48.160811,-116.753563)
Strategy Objective:	Notification and exclusion. Prevent contaminant from impacting sensitive area at Laclede boat launch.
Implementation:	Secure upstream end of boom North Shoreline to steel post. Secure downstream end of boom Midstream to buoy. Vacuum truck access is good. Notify Laclede Water Intake.
Site Safety Note:	Complete Job Safety Analysis.
Staging Area:	On site staging is large. Large turn around with ample parking. Concrete boat launch. Laclede Ferry boat launch is at site.
Field Notes:	• 4WD Access: **NO** Seasonal Access Only: **YES** Locked Gate: **NO**
Resources Targeted:	Public water supply
Watercourse:	slow moving

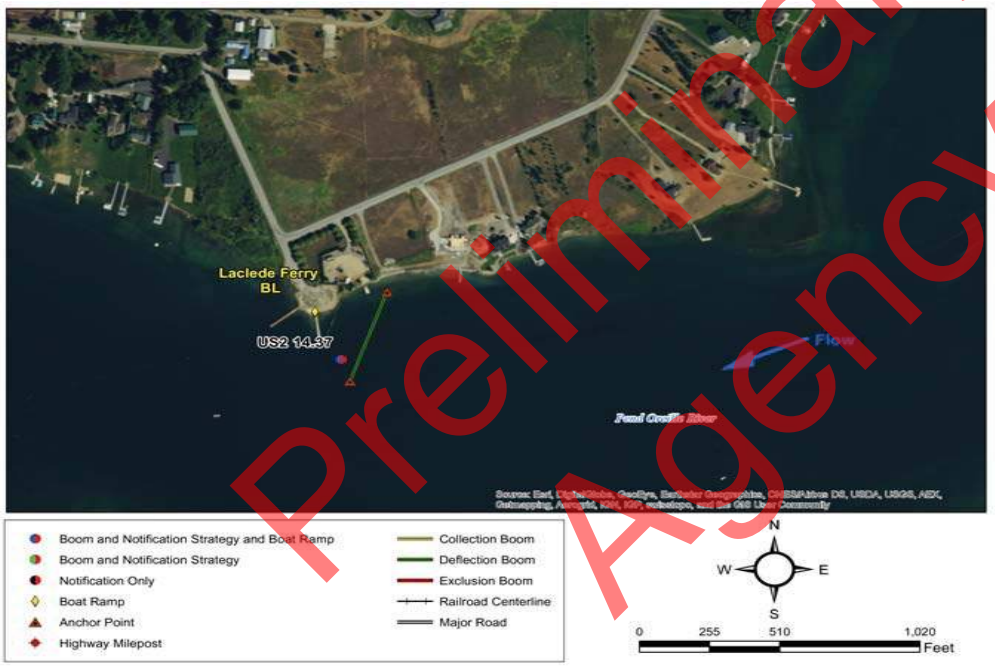

Suggested Equipment	
Quantity	Description
400 ft.	Curtain Boom Tow Bridles
As Appropriate	
500 ft.	Polypropylene Line
4	Steel Post Anchors
As Appropriate	Post pounder, shovels, knife, wood saw
1	In Water Anchors
As Appropriate	PFD work vests/rubber boots
As Appropriate	Throw bags, first aid kit
Jet boat/raft needed for strategy implementation?	Y

Suggested Personnel	
Quantity	Title (Function)
1	Booming Team Leader
1	Safety Representative
2 / 0	Haz-Mat Tech (Field Worker) / 1st Responder (Traffic Flagger)
1 / 1	Haz-Mat Tech (Boat Operator) / Haz-Mat Tech (Swiftwater)

Visited on 2016-06-30

Preliminary Draft for Agency Review

Nearest Cache: Sandpoint (14.2 miles)
Second Cache: Bonners (47.6 miles)

Nearest Address: 705 River Run Dr
Laclede ID 83841

Site-Specific Points of Contact

Site Access

Sandpoint, ID

1. Head south on N Fifth Ave Toward Cedar St - 0.2 mi
2. Turn right onto US-2 W/Pine St - 13. 8 mi
3. Turn left onto Riley Creek Rd - 0.4 mi
4. Continue onto Laclede Ferry Rd - 0.2 mi

Laclede Ferry Road, Laclede, Idaho

Preliminary Draft for Agency Review

From Laclete boat launch looking south

Laclete boat launch staging area

Preliminary Draft for Agency Review

Site Lat Long:	48.17539 -116.720867 (http://www.google.com/maps/place/48.17539,-116.720867)
Strategy Objective:	Notification and exclusion. Prevent contaminant from impacting sensitive area at at Morton Slough or from reaching Pend Oreille river from slough.
Implementation:	Lake Pend Oreille flow direction is to the southwest. Secure upstream end of boom River Left to steel post. Secure downstream end of boom River Left to steel post. Vacuum truck access is poor.
Site Safety Note:	Complete Job Safety Analysis.
Staging Area:	No staging area. Use boat ramp upstream at Morton Slough Boat Ramp for access and staging. No boat launch facilities. Morton Slough boat launch is 1.9 miles away.
Field Notes:	• 4WD Access: NO • Seasonal Access Only: NO • Locked Gate: NO
Resources Targeted:	Morton slough, wildlife habitat, recreation
Watercourse:	Lake Pend Oreille: gradient is low; substrate is sand; approx. width is 800 ft.; approx. depth is 10 to 20 feet; channelized; slow moving

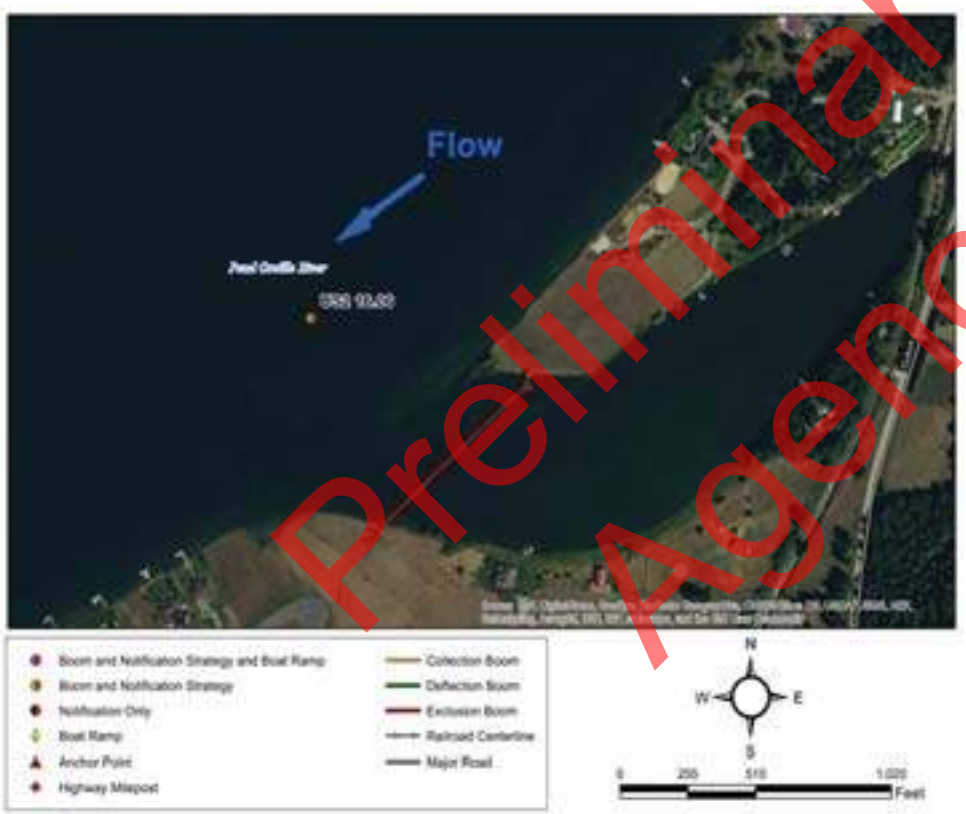

Suggested Equipment	
Quantity	Description
1000 ft.	Curtain Boom Tow Bridles
As Appropriate	
1000 ft.	Polypropylene Line
10	Steel Post Anchors
As Appropriate	Post pounder, shovels, knife, wood saw
1	In Water Anchors
As Appropriate	PFD work vests/rubber boots
As Appropriate	Throw bags, first aid kit
Jet boat/raft needed for strategy implementation?	Y

Suggested Personnel	
Quantity	Title (Function)
1	Booming Team Leader
1	Safety Representative
2 / 0	Haz-Mat Tech (Field Worker) / 1st Responder (Traffic Flagger)
1 / 1	Haz-Mat Tech (Boat Operator) / Haz-Mat Tech (Swiftwater)

Preliminary Draft for Agency Review

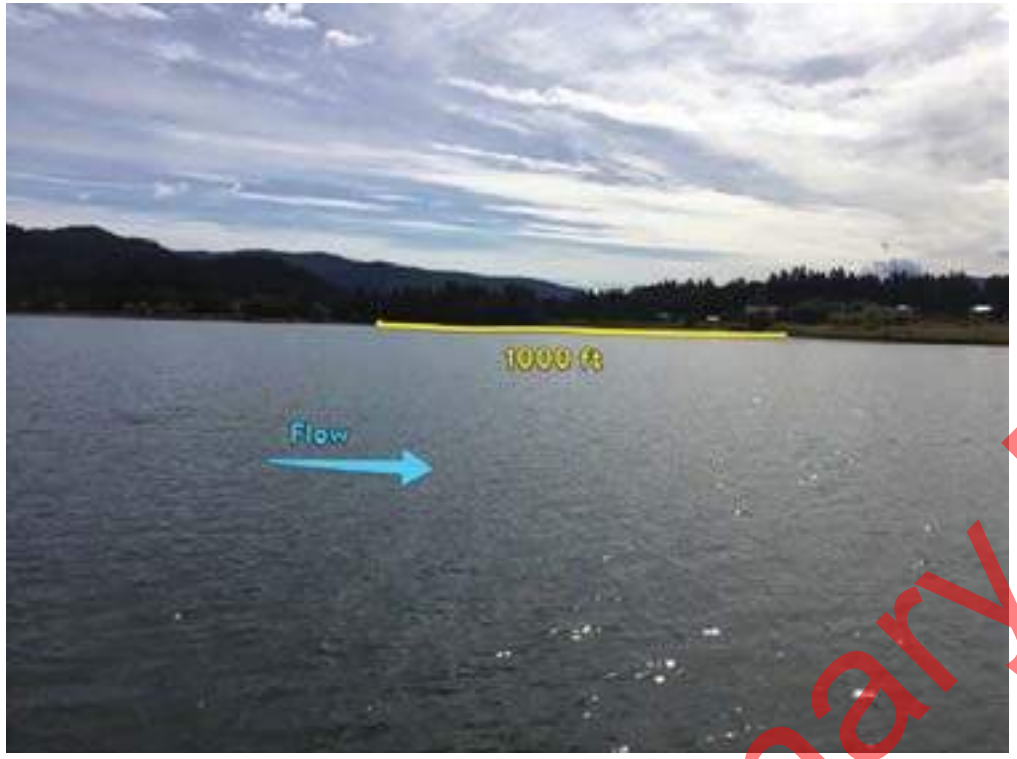

Nearest Cache: Sandpoint (16.8 miles)
Second Cache: Bonners (49.1 miles)

Nearest Address: 157 Wild Rose Ln
Sagle ID 83860

Site-Specific Points of Contact

Site Access

Sandpoint, ID
1. Head south on N Fifth Ave toward Cedar St - 0.2 mi
2. Turn left onto Pine St - 0.3 mi
3. Turn right onto S 1st Ave - 0.2 mi
4. Turn eft onto E Superior St - 0.5 mi
5. Merge onto US-95 S - 8.0 mi
6. Turn right onto Dufort Rd - 5.7 mi
7. Turn right onto Lakeshore Dr - 52 ft
8. Turn left onto Wild Rose Ln - 194 ft

Wild Rose Lane, Sagle, Idaho

Preliminary Draft for Agency Review

Looking north across the mouth of the slough.

Looking South towards Morton's slough, nearest upstream anchor site.

Preliminary Draft for Agency Review

Site Lat Long:	48.180406 -116.714421 (http://www.google.com/maps/place/48.180406,-116.714421)
Strategy Objective:	Notification and contaminant collection and recovery.
Implementation:	Lake Pend Oreille flow direction is to the southwest. Deploy collection boom and initiate contaminant recovey at Morton Slough Boat Launch. Secure upstream end of boom River Right to tree. Secure downstream end of boom River Left to steel post. Vacuum truck access is good.
Site Safety Note:	Complete Job Safety Analysis.
Staging Area:	On site staging is large. Large parking area for vehicles and equipment adjacent to boat ramp. Concrete boat launch. Morton Slough boat launch is at the site.
Field Notes:	• 4WD Access: NO • Seasonal Access Only: NO • Locked Gate: NO
Resources Targeted:	Bull Trout critical habitat, downstream municipal and irrigation water supplies, recreation, wildlife habitat
Watercourse:	Lake Pend Oreille: gradient is low; approx. width is 3000 ft.; approx. depth is 10 to 20 feet; channelized; slow moving

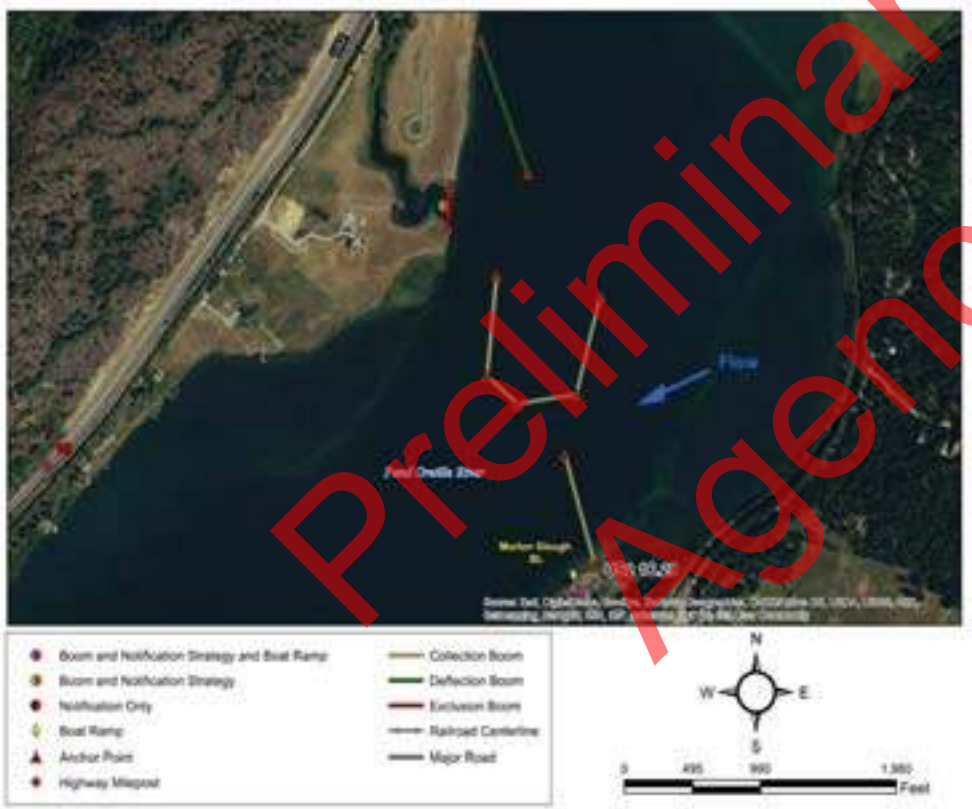

Suggested Equipment	
Quantity	Description
3700 ft.	Curtain Boom Tow Bridles
As Appropriate	
4500 ft.	Polypropylene Line
10	Steel Post Anchors
As Appropriate	Post pounder, shovels, knife, wood saw
7	In Water Anchors
As Appropriate	PFD work vests/rubber boots
As Appropriate	Throw bags, first aid kit
Jet boat/raft needed for strategy implementation?	Y

Suggested Personnel	
Quantity	Title (Function)
1	Booming Team Leader
1	Safety Representative
3 / 1	Haz-Mat Tech (Field Worker) / 1st Responder (Traffic Flagger)
2 / 2	Haz-Mat Tech (Boat Operator) / Haz-Mat Tech (Swiftwater)

Preliminary Draft for Agency Review

Nearest Cache: Sandpoint (15.0 miles)
Second Cache: Bonners (47.3 miles)

Nearest Address: 6898 Dufort Rd
Sagle ID 83860

Site-Specific Points of Contact

Site Access

Sandpoint, ID
1. Head south on N Fifth Ave toward Cedar St - 0.2 mi
2. Turn left onto Pine St - 0.3 mi
3. Turn right onto S 1st Ave - 0.2 mi
4. Turn eft onto E Superior St - 0.5 mi
5. Merge onto US-95 S - 8.0 mi
6. Turn right onto Dufort Rd - 5.7 mi
7. Turn right onto Lakeshore Dr - 52 ft
8. Turn left onto Wild Rose Ln - 194 ft
Wild Rose Lane, Sagle, Idaho

Preliminary Draft for Agency Review

View from River left collection point upstream towards River right anchor.

View from boat ramp of parking area.

Preliminary Draft for Agency Review

Site Lat Long:	48.196842 -116.710277 (http://www.google.com/maps/place/48.196842,-116.710277)
Strategy Objective:	Notification and exclusion. Prevent contaminant from impacting sensitive area at Upper Morton Slough.
Implementation:	Lake Pend Oreille flow direction is to the south. Secure upstream end of boom North Shoreline to steel post. Secure downstream end of boom South Shoreline to steel post.
Site Safety Note:	Complete Job Safety Analysis.
Staging Area:	No staging area. Laclede Ferry boat launch is 3.2 miles away.
Field Notes:	• Only accessible by boat from Morton Slough boat launch • 4WD Access: **None** Seasonal Access Only: **YES** Locked Gate: **None**
Resources Targeted:	Recreation, Threatened and Endangered Species
Watercourse:	Lake Pend Oreille: gradient is low; substrate is mud; approx. depth is over 20 feet; slow moving

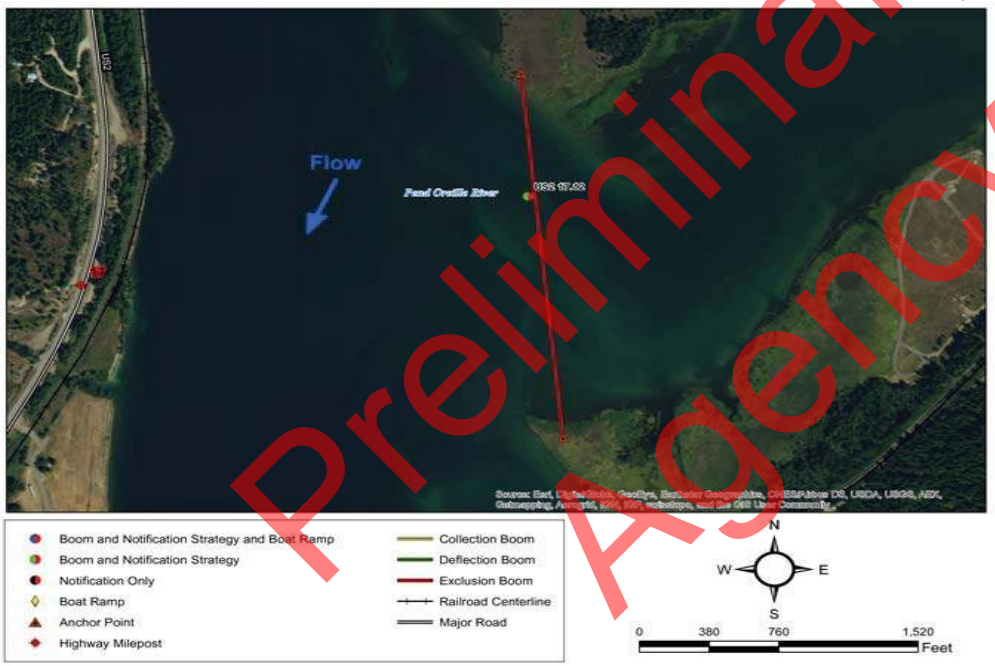

Suggested Equipment	
Quantity	Description
2500 ft.	Curtain Boom Tow Bridles
As Appropriate	
3000 ft.	Polypropylene Line
8	Steel Post Anchors
As Appropriate	Post pounder, shovels, knife, wood saw
None	In Water Anchors
As Appropriate	PFD work vests/rubber boots
As Appropriate	Throw bags, first aid kit
Jet boat/raft needed for strategy implementation?	Y

Suggested Personnel	
Quantity	Title (Function)
1	Booming Team Leader
1	Safety Representative
7 / None	Haz-Mat Tech (Field Worker) / 1st Responder (Traffic Flagger)
1 / 1	Haz-Mat Tech (Boat Operator) / Haz-Mat Tech (Swiftwater)

Visited on 2016-07-02

Preliminary Draft for Agency Review

Nearest Cache: Sandpoint (11.0 miles)
Second Cache: Bonners (44.4 miles)

Nearest Address: 5761 Wild Rose Lane
Sagle ID 83860

Site-Specific Points of Contact

Site Access

Sandpoint, ID
1. Head south on N Fifth Ave toward Cedar St - 0.2 mi
2. Turn left onto Pine St - 0.3 mi
3. Turn right onto S 1st Ave - 0.2 mi
4. Turn eft onto E Superior St - 0.5 mi
5. Merge onto US-95 S - 8.0 mi
6. Turn right onto Dufort Rd - 5.7 mi
7. Turn right onto Lakeshore Dr - 52 ft
8. Turn left onto Wild Rose Ln - 194 ft
Wild Rose Lane, Sagle, Idaho

Preliminary Draft for Agency Review

USCG0017743/27

Mouth of Upper Morton Slough from the Pend Oreille River looking south from the northern point.

Looking from an upstream point down on the mouth of Upper Morton Slough, facing southeast.

Preliminary Draft for Agency Review

Site Lat Long:	48.242393 -116.686122 (http://www.google.com/maps/place/48.242393,-116.686122)
Strategy Objective:	Notification and exclusion. Prevent contaminant from impacting sensitive area at Bay near Muskrat Lake.
Implementation:	Use two boom segments to protect sensitive area. Secure upstream end of boom River Left to tree. Secure downstream end of boom River Left to steel post. Secure upstream end of second boom River Left to steel post. Secure downstream end of second boom River Left to steel post.
Site Safety Note:	Complete Job Safety Analysis.
Staging Area:	No staging area. No boat launch facilities. Springy Point boat launch is 6.6 miles away.
Field Notes:	• Change in water levels looks like it can greatly effect the status of the island and points that define this bay. A possibility of using a post on the River left side of the main channel as a midpoint anchor (it is visible in some of the pictures). • 4WD Access: NO • Seasonal Access Only: NO • Locked Gate: NO
Resources Targeted:	Wildlife, Recreation
Watercourse:	Lake Pend Oreille:

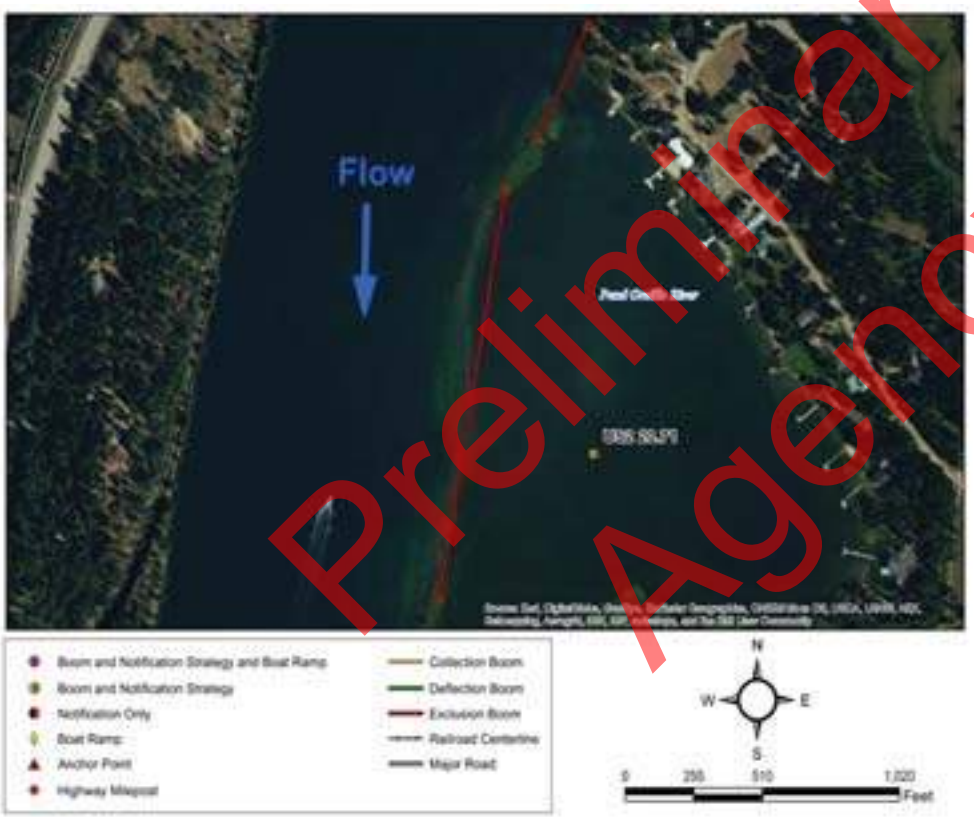

Suggested Equipment	
Quantity	Description
2200 ft.	Curtain Boom Tow Bridles
As Appropriate	
2750 ft.	Polypropylene Line
9	Steel Post Anchors
As Appropriate	Post pounder, shovels, knife, wood saw
2	In Water Anchors
As Appropriate	PFD work vests/rubber boots
As Appropriate	Throw bags, first aid kit
Jet boat/raft needed for strategy implementation?	Y

Suggested Personnel	
Quantity	Title (Function)
2	Booming Team Leader
1	Safety Representative
6 / 0	Haz-Mat Tech (Field Worker) / 1st Responder (Traffic Flagger)
1 / 1	Haz-Mat Tech (Boat Operator) / Haz-Mat Tech (Swiftwater)

Preliminary Draft for Agency Review

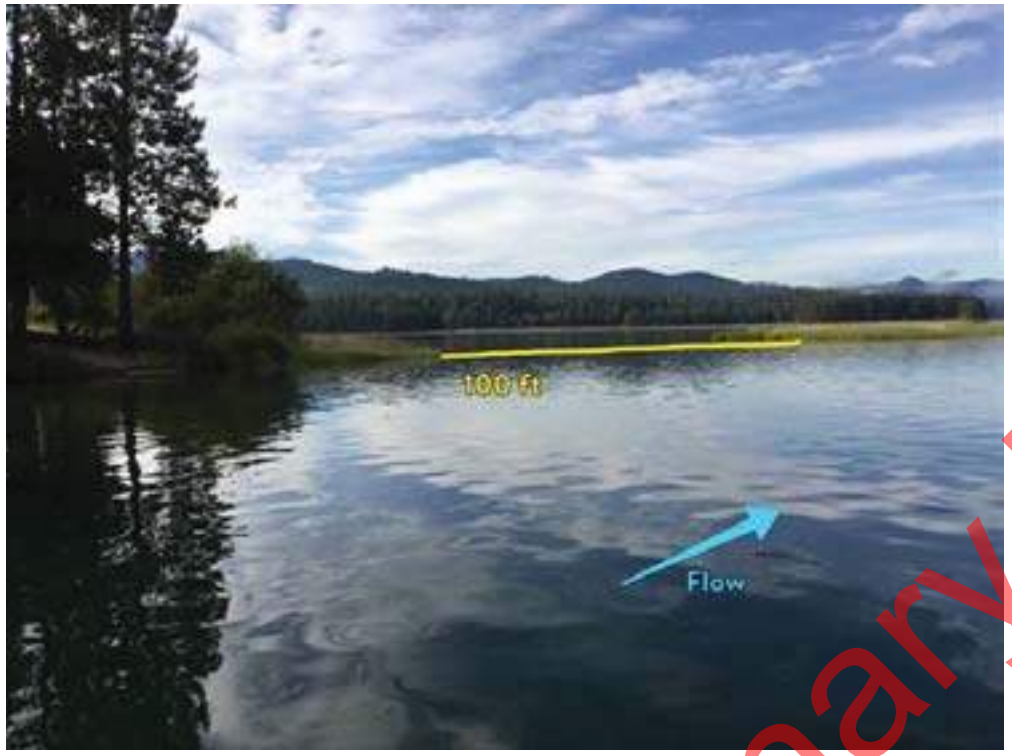

Nearest Cache: Sandpoint (12.8 miles)
Second Cache: Bonners (45.1 miles)

Nearest Address: 5 Swan Shores Dr
Sagle ID 83860

Site-Specific Points of Contact

Site Access

Sandpoint, Idaho

1. Head south on N Fifth Ave toward Cedar St - 0.2 mi
2. Turn left onto Pine St - 0.3 mi
3. Turn right onto S 1st Ave - 0.2 mi
4. Turn left onto E Superior St - 0.5 mi
5. Merge onto US-95 S - 1.9 mi
6. Turn right onto Lakeshore Dr - 3.1 mi
7. Turn right onto Springy Point - 292 ft

Springy Point, Sagle, Idaho

Preliminary Draft for Agency Review

Looking at the upstream or northern entrance to the Bay near Muskrat lake, facing east.

Looking towards the Bay near Muskrat Lake, so that both entrances to the Bay are visible, facing east.

Preliminary Draft for Agency Review

Site Lat Long:	48.246394 -116.620663 (http://www.google.com/maps/place/48.246394,-116.620663)
Strategy Objective:	Notification and exclusion. Prevent contaminant from impacting sensitive area at Dover Bay Slough.
Implementation:	Lake Pend Oreille flow direction is to the west. Secure upstream end of boom East Shoreline to tree. Secure downstream end of boom West Shoreline to steel post. Notify Dover and Dover Bay Marina.
Site Safety Note:	Complete Job Safety Analysis.
Staging Area:	On site staging is large. Grass field on peninsula east of Dover Bay Slough. Dover Marina boat launch is 1 mile away.
Field Notes:	• Use bridge across slough to deploy the Boom • 4WD Access: NO • Seasonal Access Only: NO • Locked Gate: NO
Resources Targeted:	Threatened and Endangered Species, Recreation
Watercourse:	Lake Pend Oreille: gradient is low; substrate is mud; approx. depth is 5 to 10 feet

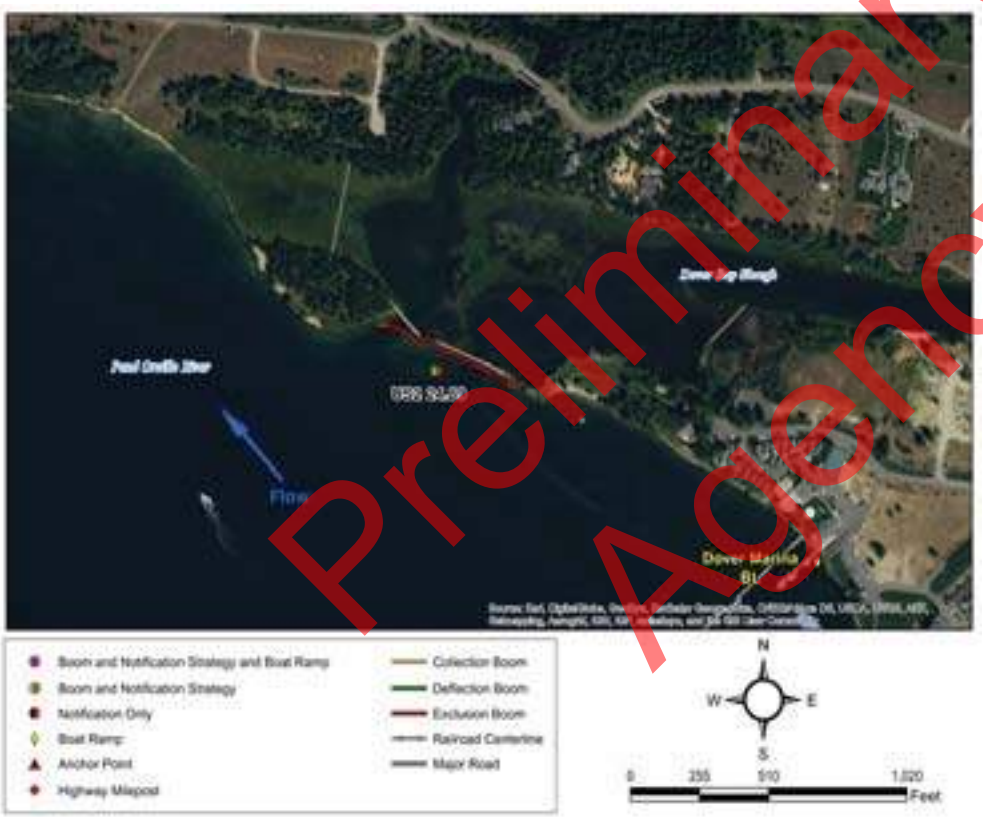

Suggested Equipment	
Quantity	Description
550 ft.	Curtain Boom Tow Bridles
As Appropriate	
700 ft.	Polypropylene Line
3	Steel Post Anchors
As Appropriate	Post pounder, shovels, knife, wood saw
None	In Water Anchors
As Appropriate	PFD work vests/rubber boots
As Appropriate	Throw bags, first aid kit
Jet boat/raft needed for strategy implementation? N	

Suggested Personnel	
Quantity	Title (Function)
1	Booming Team Leader
1	Safety Representative
3 / 0	Haz-Mat Tech (Field Worker) / 1st Responder (Traffic Flagger)
0 / 0	Haz-Mat Tech (Boat Operator) / Haz-Mat Tech (Swiftwater)

Preliminary Draft for Agency Review

Nearest Cache: Sandpoint (3.7 miles)
Second Cache: Bonners (37.1 miles)

Nearest Address: 699 Lakeshore Ave
Dover ID 83825

Site-Specific Points of Contact

Site Access - Boat access, use Dover Bay Marina, directions below

Sandpoint, Idaho
1. Head south on N Fifth Ave toward Cedar St - 0.2 mi
2. Turn right onto US-2 W/Pine St - 2.7
3. Turn left onto Old Hwy U.S. 2- 0.2 mi
4. Continue onto Dover Bay Blvd- 0.3 mi
5. Continue onto Dover Bay Pkwy- 0.2 mi
6. Turn right onto Lakeshore Avenue- 492 ft
7. Turn left to reach destination

Preliminary Draft for Agency Review

Dover Bay Slough From Lake Pend Oreille looking North

Staging area from play ground looking west

Preliminary Draft for Agency Review

Site Lat Long:	48.244013 -116.61391 (http://www.google.com/maps/place/48.244013,-116.61391)
Strategy Objective:	Notification and contaminant collection and recovery.
Implementation:	Lake Pend Oreille flow direction is to the west. Deploy collection boom and initiate contaminant recovery at Dover Bay Marina. Secure upstream end of boom Midstream to buoy. Secure downstream end of boom North Shoreline to steel post. Secure upstream end of second boom Midstream to boat. Secure downstream end of second boom Midstream to boat. Vacuum truck access is good. Notify Dover Bay Marina.
Site Safety Note:	Complete Job Safety Analysis. Be cautious of public traffic.
Staging Area:	On site staging is large. Large parking lot on the north shore, between the condominiums and the club pool. Concrete boat launch. Dover Marina boat launch is 0.1 miles away.
Field Notes:	• Exclusion boom around the marina. Private property • 4WD Access: **NO** Seasonal Access Only: **NO** Locked Gate: **NO**
Resources Targeted:	Recreation, Reservoir, Marina, Threatened and Endangered Species
Watercourse:	Lake Pend Oreille: gradient is low; substrate is mud; slow moving

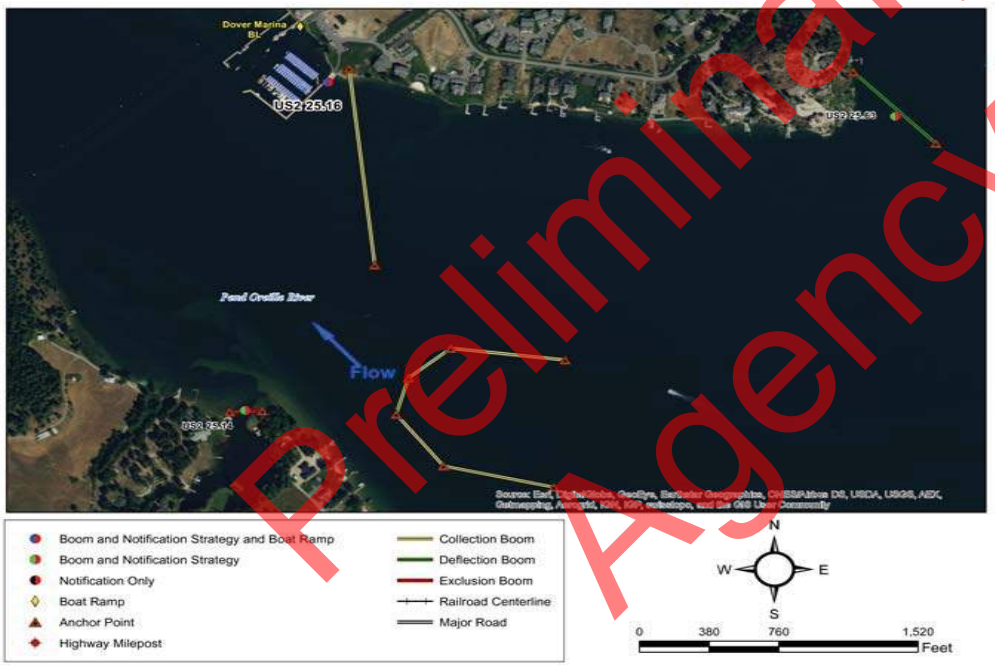

Suggested Equipment	
Quantity	Description
1000 ft.	Curtain Boom Tow Bridles
As Appropriate	Portable Skimmer; Vacuum Truck; Absorbent Boom
1250 ft.	Polypropylene Line
4	Steel Post Anchors
As Appropriate	Post pounder, shovels, knife, wood saw
3	In Water Anchors
As Appropriate	PFD work vests/rubber boots
As Appropriate	Throw bags, first aid kit
Jet boat/raft needed for strategy implementation?	Y

Suggested Personnel	
Quantity	Title (Function)
2	Booming Team Leader
1	Safety Representative
2 / 1	Haz-Mat Tech (Field Worker) / 1st Responder (Traffic Flagger)
2 / 2	Haz-Mat Tech (Boat Operator) / Haz-Mat Tech (Swiftwater)

Visited on 2016-06-30

Preliminary Draft for Agency Review

Nearest Cache: Sandpoint (3.4 miles)
Second Cache: Bonners (36.8 miles)

Nearest Address: 675 Lakeshore Ave
Dover ID 83825

Site-Specific Points of Contact

Site Access

Sandpoint, Idaho

1. Head south on N Fifth Ave toward Cedar St - 0.2 mi
2. Turn right onto US-2 W/Pine St- 2.7
3. Turn left onto Old Hwy U.S. 2- 0.2 mi
4. Continue onto Dover Bay Blvd- 0.3 mi
5. Continue onto Dover Bay Pkwy- 0.2 mi
6. Turn right onto Lakeshore Avenue- 492 ft
7. Turn left to reach destination

Preliminary Draft for Agency Review

Dover Bay Marina staging area looking north

Lake Pend Oreille from the north shore looking south

Preliminary Draft for Agency Review

Dover Bay Water Intake

Back to Sector Map
Back to summary Table

(BNSF Newport 71.87) **US2 25.63**

Site Lat Long:	48.244195 -116.601173 (http://www.google.com/maps/place/48.244195,-116.601173)
Strategy Objective:	Notification and exclusion. Prevent contaminant from impacting sensitive area at Dover Bay Water Intake.
Implementation:	Secure upstream end of boom West Shoreline to steel post. Secure downstream end of boom Midstream to buoy. Notify City of Dover.
Site Safety Note:	Complete Job Safety Analysis.
Staging Area:	No staging area. Private boat launch at Dover Bay Marina. No boat launch facilities. Dover Marina boat launch is 0.7 miles away.
Field Notes:	• Surface water supply for Dover. Intake on bottom of lake. Notify City of Dover Water operator (208)-263-4633 to stop drawing water. • 4WD Access: **NO** Seasonal Access Only: **YES** Locked Gate: **NO**
Resources Targeted:	Public water supply
Watercourse:	Lake Pend Oreille:

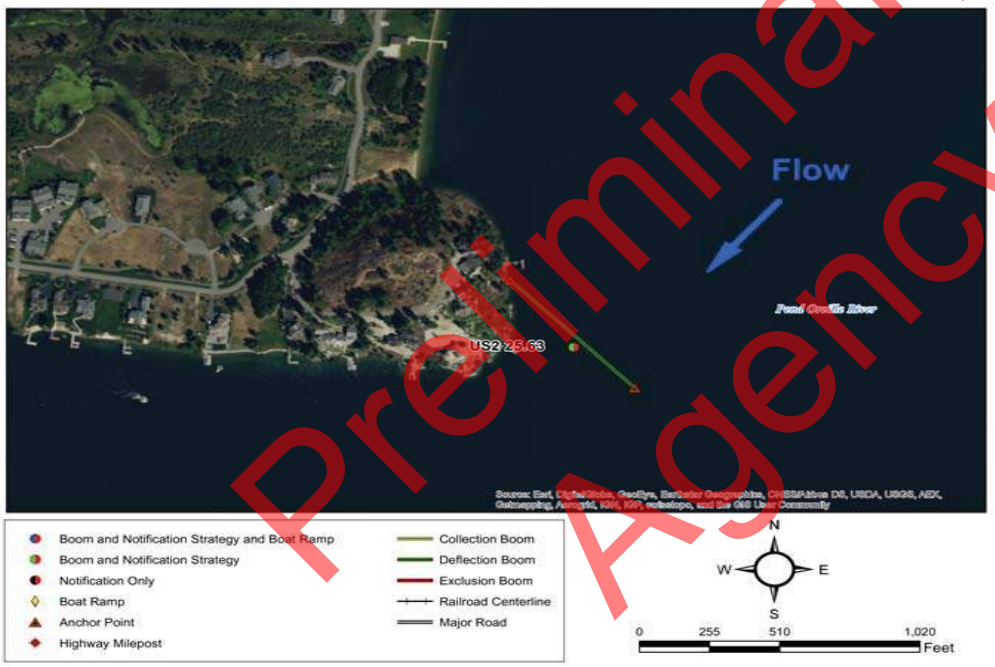

Suggested Equipment	
Quantity	Description
800 ft.	Curtain Boom Tow Bridles
As Appropriate	
1000 ft.	Polypropylene Line
4	Steel Post Anchors
As Appropriate	Post pounder, shovels, knife, wood saw
1	In Water Anchors
As Appropriate	PFD work vests/rubber boots
As Appropriate	Throw bags, first aid kit
Jet boat/raft needed for strategy implementation?	Y

Suggested Personnel	
Quantity	Title (Function)
1	Booming Team Leader
1	Safety Representative
2 / 0	Haz-Mat Tech (Field Worker) / 1st Responder (Traffic Flagger)
1 / 1	Haz-Mat Tech (Boat Operator) / Haz-Mat Tech (Swiftwater)

Visited on 2016-07-02

Preliminary Draft for Agency Review

Nearest Cache: Sandpoint (3.3 miles)
Second Cache: Bonners (36.7 miles)

Nearest Address: 105 Shannon Ln
Dover ID 83825

Site-Specific Points of Contact

Site Access

Sandpoint, Idaho
1. Head south on N Fifth Ave toward Cedar St - 0.2 mi
2. Turn right onto US-2 W/Pine St - 2.7 mi
3. Turn left onto Old Hwy U.S. 2 - 0.1 mi
4. Turn left onto 3rd St - 0.2 mi
5. Turn left onto Jackson Ave - 190 ft
6. Turn right onto Lakeshore Avenue - 0.3 mi
7. Turn left onto Shannon Ln - 0.1 mi

Shannon Lane, Sagle, Idaho

Preliminary Draft for Agency Review

Potential Dover Bay Water Intake from lake Pend Orellie looking north west

None

Preliminary Draft for Agency Review

This page intentionally blank

Preliminary Draft for Agency Review

Preliminary Draft for Agency Review

Cardboard Sector 3A and 3B

This page intentionally blank

Preliminary Draft for Agency Review

Sector & Map	Site ID & Highway Milepost	Railroad Milepost	Site Name	Accessible ny boat at Low Water?	Nearest Boat Ramp or Staging Area
Sector 3A Sandpoint	US2 26.68	BNSF Newport 72.79	Chuck Slough	No	US2 25.15
	US2 27.07	BNSF Newport 73.29	Ontario St West	No	US2 25.15
	US2 27.17	BNSF Newport 73.33	Ontario St East	No	US2 25.15
	US2 27.74	BNSF Spokane 3.32	S. Ella Ave Culvert	No	US95 473.87
Sector 3B Sandpoint	US2 28.02	BNSF Spokane 3.33	Memorial Park Culvert	No	US95 473.87
	US2 28.17	BNSF Spokane 3.35	S Euclid Ave Culvert	No	US95 473.87
	US2 28.31	BNSF Spokane 3.37	S 4th Ave Culvert	No	US95 473.87
	US2 28.36	BNSF Spokane 3.38	S 3rd Ave Culvert	No	US95 473.87
	US95 472.85	BNSF Spokane 4.28	Long Bridge	Yes	US95 471.08
	US95 473.84	BNSF Spokane 3.4	Sandpoint Public Works Water Intake	Yes	US95 473.87
	US95 473.9	BNSF Spokane 3.17	Sandpoint City Beach and Marina	Yes	US95 473.87
	US95 473.91	BNSF Spokane 3.29	Mouth of Sand Creek	Yes	US95 473.87
	US95 474.31	BNSF Spokane 3.13	Lower Sand Creek	No	US95 473.87

Preliminary Draft for Agency Review

Sector 3A Sandpoint

Go Back to Regional Map

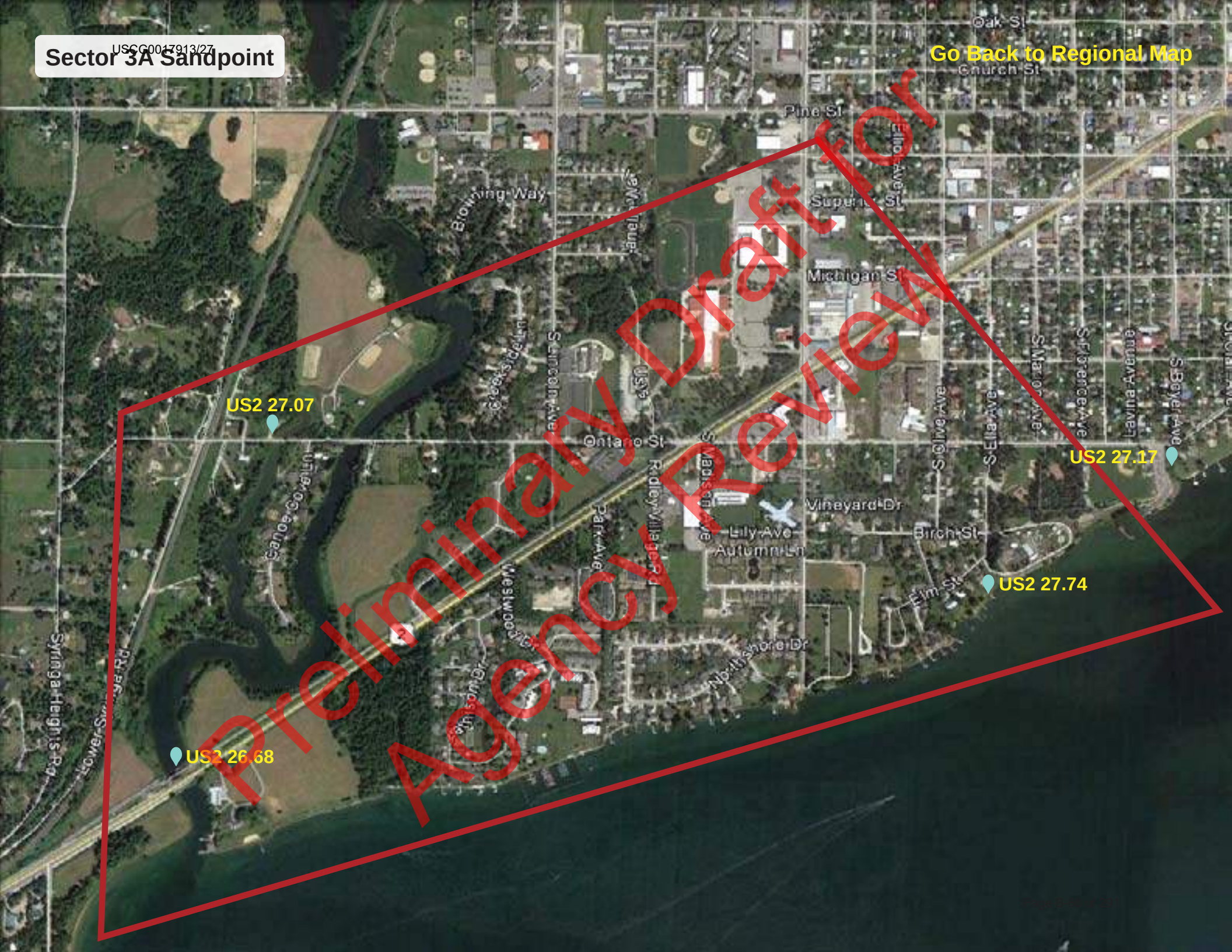

Sector 3B Sandpoint

Go Back to Regional Map

Site Lat Long:	48.258596 -116.586053 (http://www.google.com/maps/place/48.258596,-116.586053)
Strategy Objective:	Notification and contaminant collection and recovery.
Implementation:	Chuck Slough flow direction is to the south. Deploy collection boom and initiate contaminant recovery at Chuck Slough. Secure upstream end of boom River Left to steel post. Secure downstream end of boom River Right to steel post. Vacuum truck access is poor.
Site Safety Note:	Complete Job Safety Analysis. Traffic control on highway is necessary.
Staging Area:	No staging area. Use small pullout on west side of bridge for parking. Access river by steep, rocky trails. Dover Marina boat launch is 1.8 miles away.
Field Notes:	• Site is a natural exclusion area at full pool with culvert submerged. At lower flows booming is necessary to prevent oil from entering culvert and reservoir. • Site could be used for spill to chuck slough but will naturally collect oil at summer lake levels.
Resources Targeted:	Reservoir
Watercourse:	Chuck Slough: gradient is low; substrate is gravel; approx. width is 84 ft.; approx. depth is 5 to 10 feet; slow moving

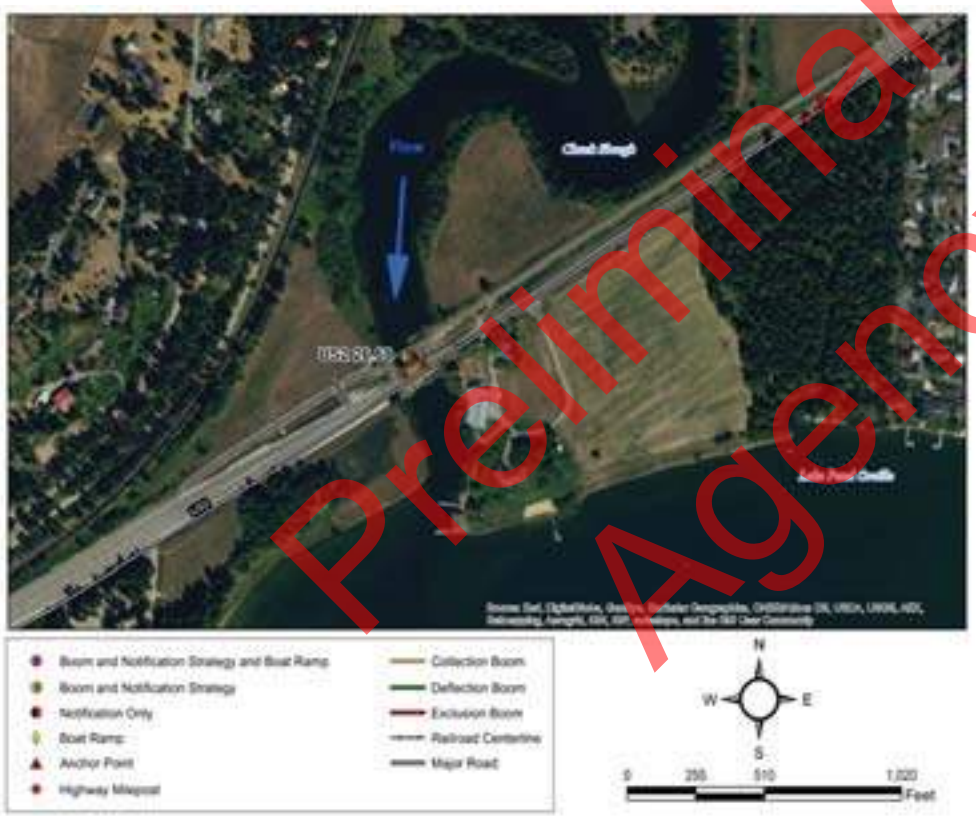

Suggested Equipment	
Quantity	Description
50 ft.	Curtain Boom Tow Bridles
As Appropriate	
70 ft.	Polypropylene Line
8	Steel Post Anchors
As Appropriate	Post pounder, shovels, knife, wood saw
None	In Water Anchors
As Appropriate	PFD work vests/rubber boots
As Appropriate	Throw bags, first aid kit
Jet boat/raft needed for strategy implementation?	N

Suggested Personnel	
Quantity	Title (Function)
1	Booming Team Leader
1	Safety Representative
2 / 1	Haz-Mat Tech (Field Worker) / 1st Responder (Traffic Flagger)
0 / 0	Haz-Mat Tech (Boat Operator) / Haz-Mat Tech (Swiftwater)

Preliminary Draft for Agency Review

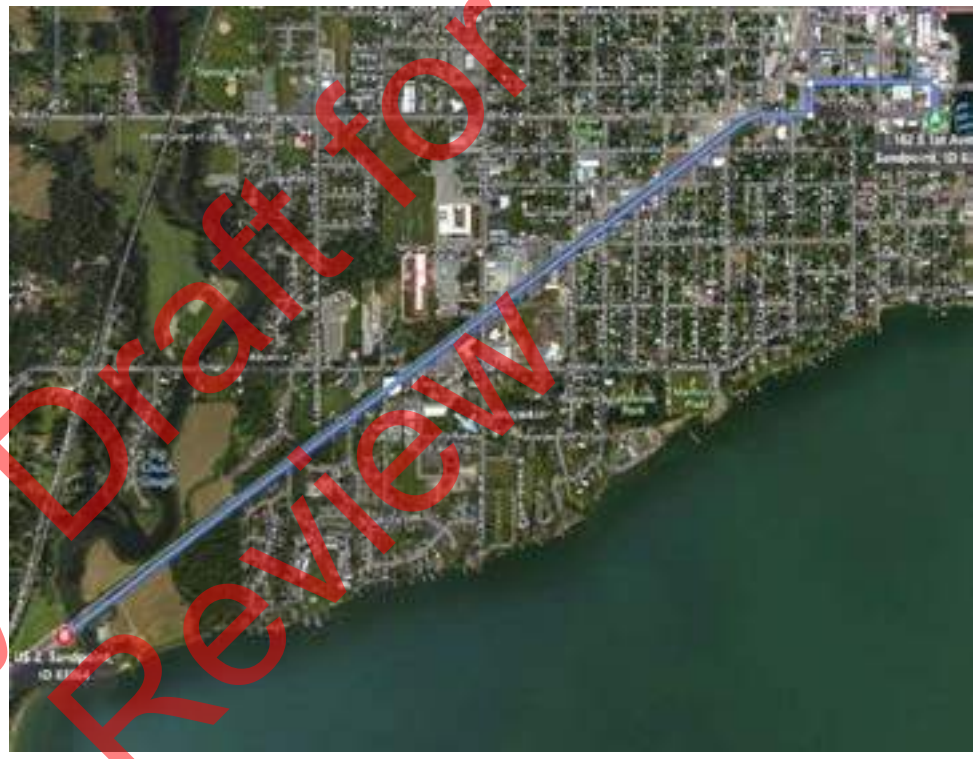

Nearest Cache: Sandpoint (1.6 miles)
Second Cache: Bonners (35.0 miles)

Nearest Address: 26808 Highway 2
Sandpoint ID 83864

Site-Specific Points of Contact

Site Access

Sandpoint, ID
1. Head south on N Fifth Ave toward Cedar St- 0.2 mi
2. Turn right onto US-2 W/Pine St- 1.8 mi

Preliminary Draft for Agency Review

Looking south from walking bridge

Small pullout on west side of bridge.

Preliminary Draft for Agency Review

Site Lat Long:	48.265836 -116.583495 (http://www.google.com/maps/place/48.265836,-116.583495)
Strategy Objective:	Notification and contaminant collection and recovery.
Implementation:	Chuck Slough flow direction is to the south. Deploy collection boom and initiate contaminant recovery at Ontario St West. Secure upstream end of boom River Right to steel post. Secure downstream end of boom River Left to steel post. Vacuum truck access is good.
Site Safety Note:	Complete Job Safety Analysis. Poor river access due to dense vegetation and steep slope.
Staging Area:	No staging area. Vacuum truck access from narrow road. No other staging options. Dover Marina boat launch is 2.3 miles away.
Field Notes:	• Access to upstream anchor is difficult due to private land and dense vegetation. Small inflatable boat would be advised. • 4WD Access: NO • Seasonal Access Only: NO • Locked Gate: NO
Resources Targeted:	Recreation, Reservoir, Threatened and Endangered Species
Watercourse:	Chuck Slough: gradient is low; substrate is mud; approx. width is 150 ft.; approx. depth is 5 to 10 feet; slow moving

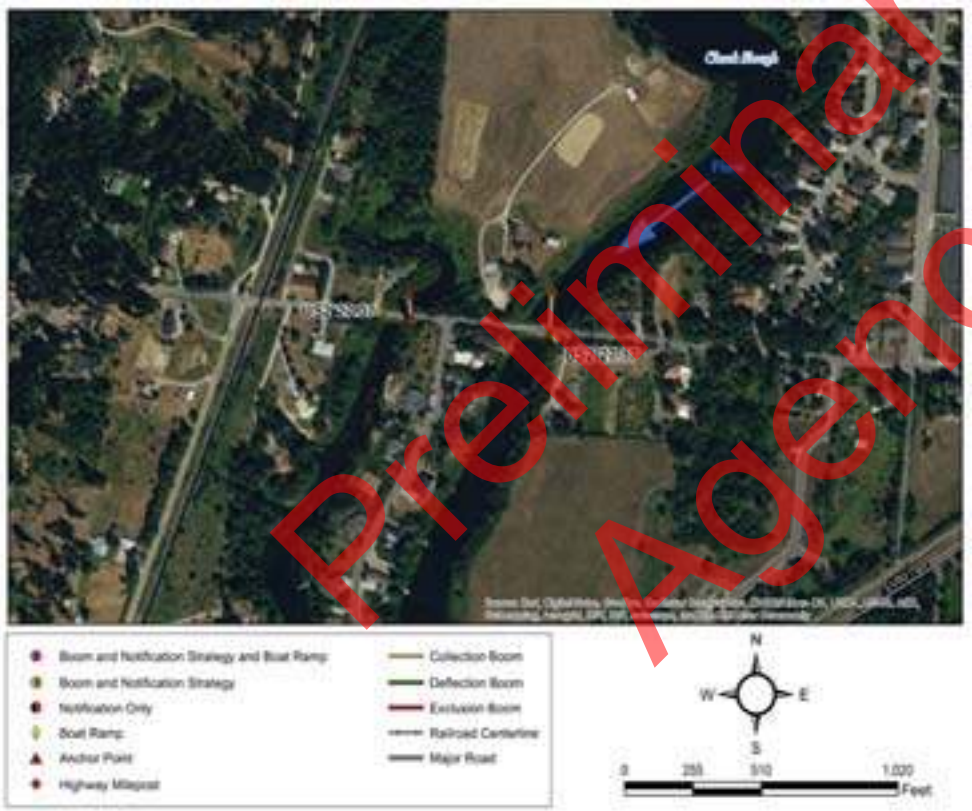

Suggested Equipment	
Quantity	Description
100 ft.	Curtain Boom Tow Bridles
As Appropriate	
125 ft.	Polypropylene Line
6	Steel Post Anchors
As Appropriate	Post pounder, shovels, knife, wood saw
None	In Water Anchors
As Appropriate	PFD work vests/rubber boots
As Appropriate	Throw bags, first aid kit
Jet boat/raft needed for strategy implementation?	Y

Suggested Personnel	
Quantity	Title (Function)
1	Booming Team Leader
1	Safety Representative
2 / 2	Haz-Mat Tech (Field Worker) / 1st Responder (Traffic Flagger)
1 / 0	Haz-Mat Tech (Boat Operator) / Haz-Mat Tech (Swiftwater)

Preliminary Draft for Agency Review

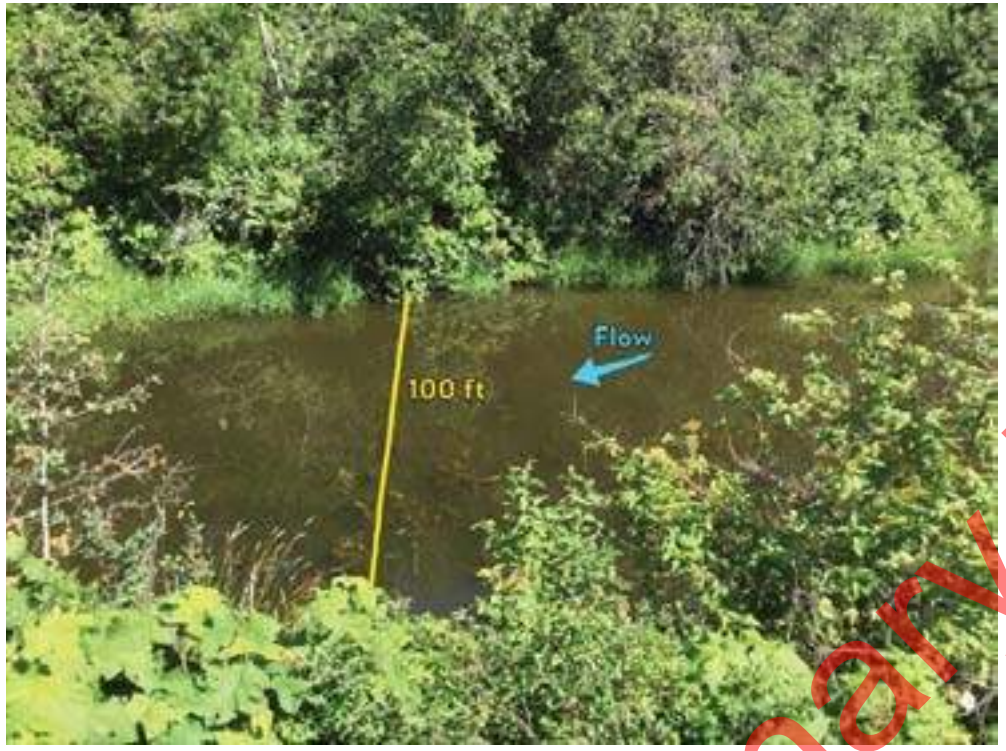

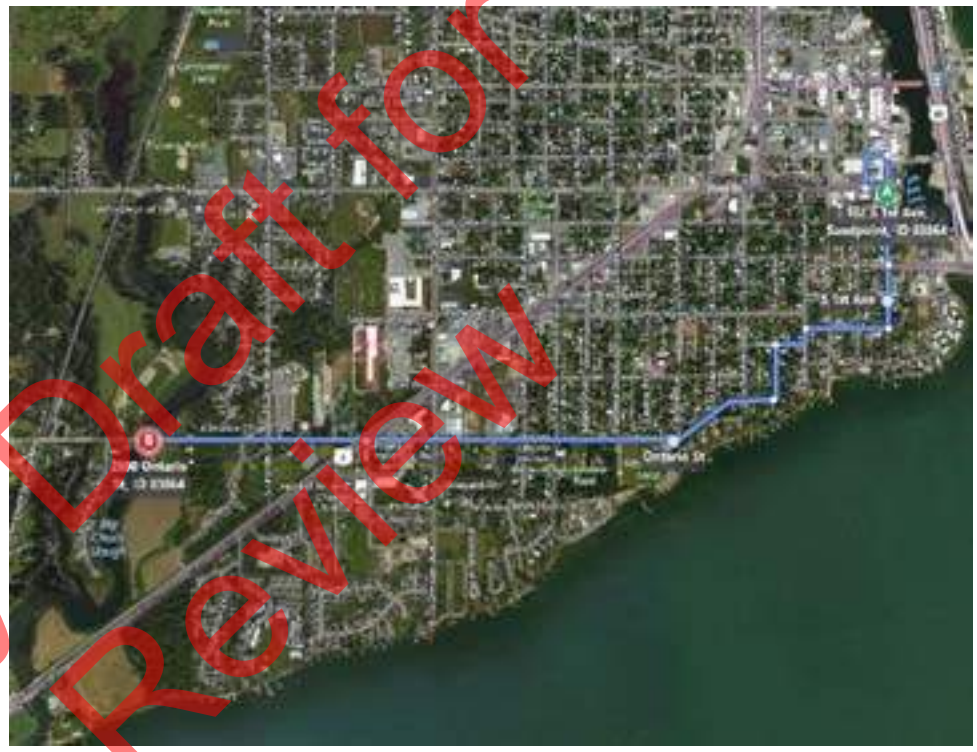

Nearest Cache: Sandpoint (1.3 miles)
Second Cache: Bonners (34.8 miles)

Nearest Address: 2690 Ontario St
Dover ID 83825

Site-Specific Points of Contact

Site Access

Sandpoint, Idaho
1. Head south on N Fifth Ave toward Cedar St - 0.2 mi
2. Turn right onto US-2 W/Pine St - 1.0 mi
3. Turn right onto Ontario St - 0.5 mi
2690 West Ontario Street, Sandpoint, Idaho

Preliminary Draft for Agency Review

Looking east at Ontario st.

Looking north at Chuck Slough

Preliminary Draft for Agency Review

Site Lat Long:	48.265752 -116.580771 (http://www.google.com/maps/place/48.265752,-116.580771)
Strategy Objective:	Notification and contaminant collection and recovery.
Implementation:	Chuck Slough flow direction is to the south. Deploy collection boom and initiate contaminant recovery at Ontario St East. Secure upstream end of boom River Right to steel post. Secure downstream end of boom River Left to steel post. Vacuum truck access is good.
Site Safety Note:	Complete Job Safety Analysis.
Staging Area:	No staging area. Narrow two lane road with culvert underpass for slough. Dover Marina boat launch is 3.1 miles away.
Field Notes:	• 4WD Access: NO • Seasonal Access Only: NO • Locked Gate: NO
Resources Targeted:	Recreation, Threatened and Endangered Species
Watercourse:	Chuck Slough: gradient is low; substrate is mud; approx. width is 150 ft., approx. depth is 5 to 10 feet; slow moving

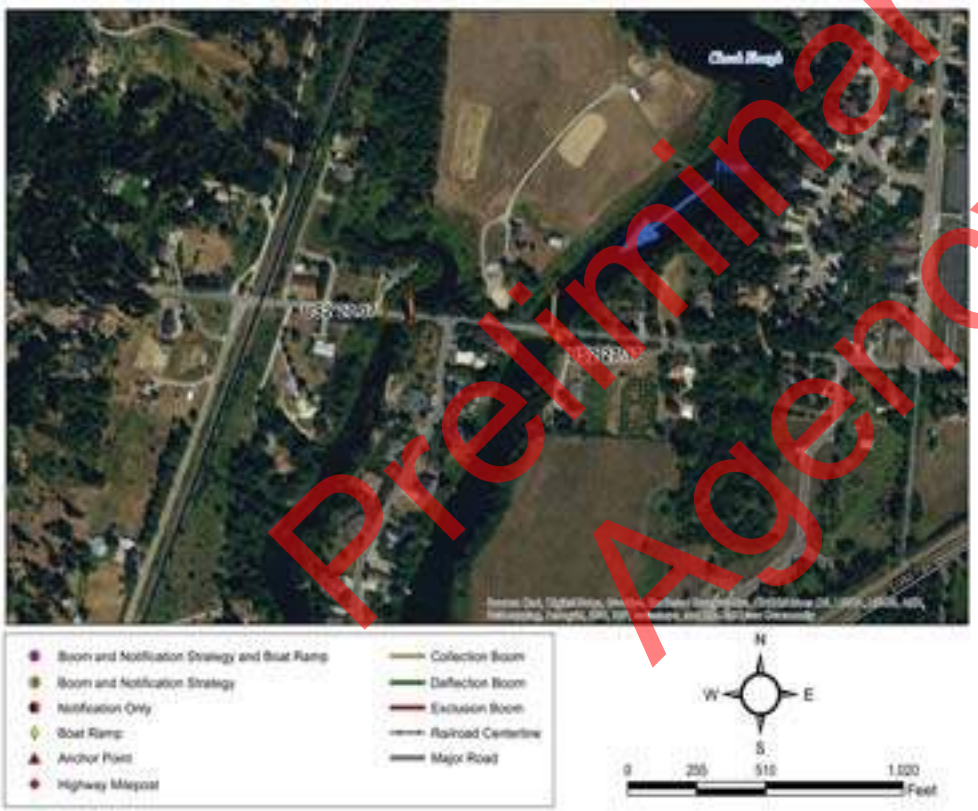

Suggested Equipment	
Quantity	Description
150 ft.	Curtain Boom Tow Bridles
As Appropriate	
200 ft.	Polypropylene Line
8	Steel Post Anchors
As Appropriate	Post pounder, shovels, knife, wood saw
None	In Water Anchors
As Appropriate	PFD work vests/rubber boots
As Appropriate	Throw bags, first aid kit
Jet boat/raft needed for strategy implementation?	Y

Suggested Personnel	
Quantity	Title (Function)
1	Booming Team Leader
1	Safety Representative
2 / 1	Haz-Mat Tech (Field Worker) / 1st Responder (Traffic Flagger)
0 / 0	Haz-Mat Tech (Boat Operator) / Haz-Mat Tech (Swiftwater)

Preliminary Draft for Agency Review

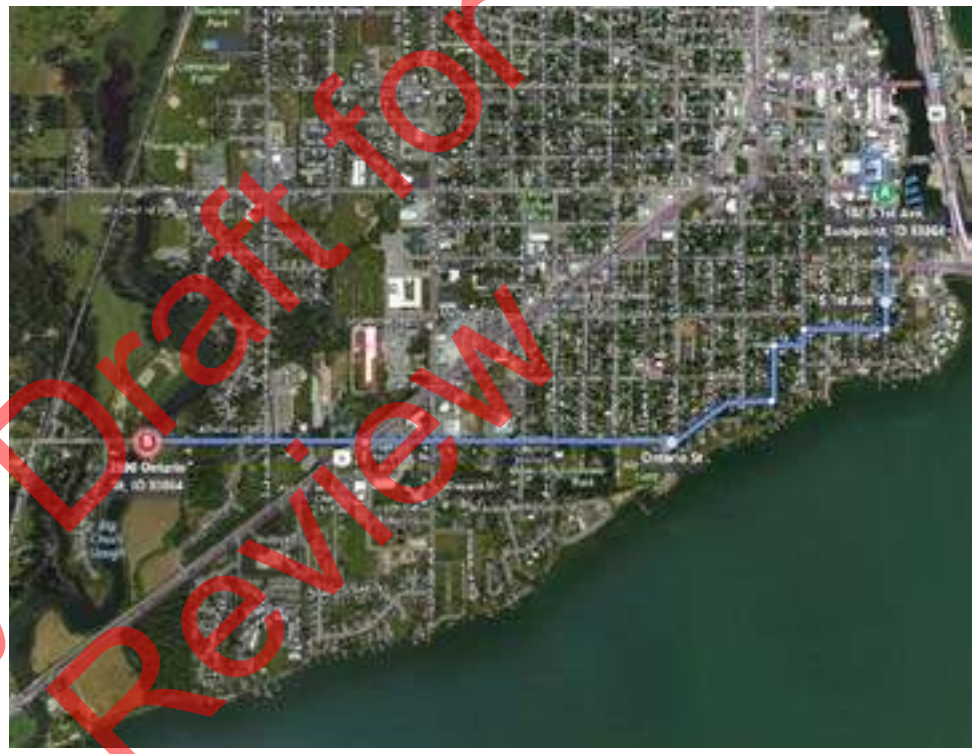

Nearest Cache: Sandpoint (1.2 miles)
Second Cache: Bonners (34.6 miles)

Nearest Address: 2355 Ontario St
Dover ID 83825

Site-Specific Points of Contact

Site Access

Sandpoint, Idaho
1. Head south on N Fifth Ave toward Cedar St - 0.2 mi
2. Turn right onto US-2 W/Pine St - 1.0 mi
3. Turn right onto Ontario St - 0.3 mi
2355 Ontario St, Sandpoint, Idaho

Preliminary Draft for Agency Review

Looking east at Ontario st.

Looking north at Chuck Slough

Preliminary Draft for Agency Review

Site Lat Long:	48.262676 -116.562306 (http://www.google.com/maps/place/48.262676,-116.562306)
Strategy Objective:	Notification and contaminant collection and recovery.
Implementation:	Deploy collection boom and initiate contaminant recovey at S. Ella Ave Culvert. Secure upstream end of boom North Shoreline to steel post. Secure downstream end of boom North Shoreline to steel post. Vacuum truck access is good.
Site Safety Note:	Complete Job Safety Analysis.
Staging Area:	On site staging is large. Private Property.No boat launch facilities. Sandpoint City Beach boat launch is 1.6 miles away.
Field Notes:	• Private Property • 4WD Access: NO • Seasonal Access Only: NO • Locked Gate: NO
Resources Targeted:	Wildlife Habitat, Threatened and Endangered Species, Recreational Use, Reservoir or Lake
Watercourse:	Lake Pend Oreille:

Suggested Equipment	
Quantity	Description
50 ft.	Curtain Boom Tow Bridles
As Appropriate	
75 ft.	Polypropylene Line
6	Steel Post Anchors
As Appropriate	Post pounder, shovels, knife, wood saw
None	In Water Anchors
As Appropriate	PFD work vests/rubber boots
As Appropriate	Throw bags, first aid kit
Jet boat/raft needed for strategy implementation? N	

Suggested Personnel	
Quantity	Title (Function)
1	Booming Team Leader
1	Safety Representative
2 / 0	Haz-Mat Tech (Field Worker) / 1st Responder (Traffic Flagger)
0 / 0	Haz-Mat Tech (Boat Operator) / Haz-Mat Tech (Swiftwater)

Preliminary Draft for Agency Review

Nearest Cache: Sandpoint (0.8 miles)
Second Cache: Bonners (34.2 miles)

Nearest Address: 1101 Elm St
Sandpoint ID 83864

Site-Specific Points of Contact

Site Access

Sandpoint, Idaho
1. Head south on N Fifth Ave toward Cedar St - 0.2 mi
2. Turn right onto US-2 W/Pine St - 0.5 mi
3. Turn left onto S Ella Ave - 0.4 mi
4. Continue onto Elm St - 3 ft
1101 Elm St, Sandpoint, Idaho

Preliminary Draft for Agency Review

Picture taken facing water treatment plant.

None

Preliminary Draft for Agency Review

Site Lat Long:	48.265041 -116.556933 (http://www.google.com/maps/place/48.265041,-116.556933)
Strategy Objective:	Notification and contaminant collection and recovery.
Implementation:	Deploy collection boom and initiate contaminant recovery at Memorial Park Outflow. Secure upstream end of boom North Shoreline to steel post. Vacuum truck access is good.
Site Safety Note:	Complete Job Safety Analysis.
Staging Area:	No staging area. Adjacent parking lot should be utilized. No boat launch facilities. Sandpoint City Beach boat launch is 1.4 miles away.
Field Notes:	• 4WD Access: NO • Seasonal Access Only: NO • Locked Gate: NO
Resources Targeted:	Wildlife Habitat, Threatened and Endangered Species, Recreational Use, Reservoir or Lake
Watercourse:	Lake Pend Oreille:

Suggested Equipment	
Quantity	Description
50 ft.	Curtain Boom Tow Bridles
As Appropriate	
75 ft.	Polypropylene Line
6	Steel Post Anchors
As Appropriate	Post pounder, shovels, knife, wood saw
None	In Water Anchors
As Appropriate	PFD work vests/rubber boots
As Appropriate	Throw bags, first aid kit
Jet boat/raft needed for strategy implementation? N	

Suggested Personnel	
Quantity	Title (Function)
1	Booming Team Leader
1	Safety Representative
2 / 0	Haz-Mat Tech (Field Worker) / 1st Responder (Traffic Flagger)
0 / 0	Haz-Mat Tech (Boat Operator) / Haz-Mat Tech (Swiftwater)

Preliminary Draft for Agency Review

Nearest Cache: Sandpoint (0.7 miles)
Second Cache: Bonners (33.9 miles)

Nearest Address: 631 Lakeview Blvd
Sandpoint ID 83864

Site-Specific Points of Contact

Site Access

Sandpoint, Idaho
1. Head south on N Fifth Ave toward Cedar St - 0.2 mi
2. Turn right onto Pine St - 220 ft
3. Turn let onto Euclid Ave - 0.4 mi
4. Turn right onto Lakeview Blvd - 0.1 mi

Preliminary Draft for Agency Review

View of culvert. Currently underwater, but fluctuates with lake level from dam use.

View of culvert.

Preliminary Draft for Agency Review

Site Lat Long:	48.265975 -116.553976 (http://www.google.com/maps/place/48.265975,-116.553976)
Strategy Objective:	Notification and contaminant collection and recovery.
Implementation:	Deploy collection boom and initiate contaminant recovery at S Euclid Ave Outflow. Secure upstream end of boom North Shoreline to steel post. Secure downstream end of boom North Shoreline to fixed anchor. Vacuum truck access is good.
Site Safety Note:	Complete Job Safety Analysis.
Staging Area:	On site staging is medium. Private Property.No boat launch facilities. Sandpoint City Beach boat launch is 1.1 miles away.
Field Notes:	• 4WD Access: NO • Seasonal Access Only: NO • Locked Gate: NO
Resources Targeted:	Wildlife Habitat, Threatened and Endangered Species, Recreational Use, Reservoir or Lake
Watercourse:	

Suggested Equipment	
Quantity	Description
50 ft.	Curtain Boom Tow Bridles
As Appropriate	
65 ft.	Polypropylene Line
3	Steel Post Anchors
As Appropriate	Post pounder, shovels, knife, wood saw
None	In Water Anchors
As Appropriate	PFD work vests/rubber boots
As Appropriate	Throw bags, first aid kit
Jet boat/raft needed for strategy implementation? N	

Suggested Personnel	
Quantity	Title (Function)
1	Booming Team Leader
1	Safety Representative
2 / 0	Haz-Mat Tech (Field Worker) / 1st Responder (Traffic Flagger)
0 / 0	Haz-Mat Tech (Boat Operator) / Haz-Mat Tech (Swiftwater)

Preliminary Draft for Agency Review

Nearest Cache: Sandpoint (0.7 miles)
Second Cache: Bonners (33.9 miles)

Nearest Address: 601 Euclid Ave
Sandpoint ID 83864

Site-Specific Points of Contact

Site Access

Sandpoint, Idaho
1. Head south on N Fifth Ave toward Cedar St - 0.2 mi
2. Turn right onto Pine St - 220 ft
3. Turn let onto Euclid Ave - 0.4 mi

Preliminary Draft for Agency Review

Preliminary Draft for Agency Review

Site Lat Long:	48.266921 -116.551305 (http://www.google.com/maps/place/48.266921,-116.551305)
Strategy Objective:	Notification and contaminant collection and recovery.
Implementation:	Deploy collection boom and initiate contaminant recovery at S 4th Ave Outflow. Secure upstream end of boom North Shoreline to steel post. Secure downstream end of boom North Shoreline to fixed anchor. Vacuum truck access is poor.
Site Safety Note:	Complete Job Safety Analysis.
Staging Area:	On site staging is medium. No boat launch facilities. Sandpoint City Beach boat launch is 1.0 miles away.
Field Notes:	• 4WD Access: NO • Seasonal Access Only: NO • Locked Gate: NO
Resources Targeted:	Wildlife Habitat, Threatened and Endangered Species, Recreational Use, Reservoir or Lake
Watercourse:	

Suggested Equipment	
Quantity	Description
50 ft.	Curtain Boom Tow Bridles
As Appropriate	
65 ft.	Polypropylene Line
3	Steel Post Anchors
As Appropriate	Post pounder, shovels, knife, wood saw
None	In Water Anchors
As Appropriate	PFD work vests/rubber boots
As Appropriate	Throw bags, first aid kit
Jet boat/raft needed for strategy implementation?	N

Suggested Personnel	
Quantity	Title (Function)
1	Booming Team Leader
1	Safety Representative
2 / 0	Haz-Mat Tech (Field Worker) / 1st Responder (Traffic Flagger)
0 / 0	Haz-Mat Tech (Boat Operator) / Haz-Mat Tech (Swiftwater)

Preliminary Draft for Agency Review

Nearest Cache: Sandpoint (0.8 miles)
Second Cache: Bonners (34.0 miles)

Nearest Address: 527 S 4th Ave
Sandpoint ID 83864

Site-Specific Points of Contact

Site Access

Sandpoint, Idaho
1. Head south on N Fifth Ave toward Cedar St - 0.2 mi
2. Turn left onto Pine St - 495 ft
3. Turn right onto S 4th Ave - 0.4 mi

Preliminary Draft for Agency Review

Image of concrete submerged culvert.

Proposed boom area facing south.

Preliminary Draft for Agency Review

Site Lat Long:	48.267283 -116.550304 (http://www.google.com/maps/place/48.267283,-116.550304)
Strategy Objective:	Notification and contaminant collection and recovery.
Implementation:	Deploy collection boom and initiate contaminant recovery at S 3rd Ave Outflow. Secure upstream end of boom North Shoreline to fixed anchor. Secure downstream end of boom North Shoreline to steel post. Vacuum truck access is good.
Site Safety Note:	Complete Job Safety Analysis.
Staging Area:	On site staging is small. No boat launch facilities. Sandpoint City Beach boat launch is 0.9 miles away.
Field Notes:	• 4WD Access: NO • Seasonal Access Only: NO • Locked Gate: NO
Resources Targeted:	Wildlife Habitat, Threatened and Endangered Species, Recreational Use, Reservoir or Lake
Watercourse:	

Suggested Equipment	
Quantity	Description
50 ft.	Curtain Boom Tow Bridles
As Appropriate	
65 ft.	Polypropylene Line
3	Steel Post Anchors
As Appropriate	Post pounder, shovels, knife, wood saw
None	In Water Anchors
As Appropriate	PFD work vests/rubber boots
As Appropriate	Throw bags, first aid kit
Jet boat/raft needed for strategy implementation? N	

Suggested Personnel	
Quantity	Title (Function)
1	Booming Team Leader
1	Safety Representative
2 / 0	Haz-Mat Tech (Field Worker) / 1st Responder (Traffic Flagger)
0 / 0	Haz-Mat Tech (Boat Operator) / Haz-Mat Tech (Swiftwater)

Preliminary Draft for Agency Review

Nearest Cache: Sandpoint (0.9 miles)
Second Cache: Bonners (34.0 miles)

Nearest Address: 600-616 South 3rd Ave
Sandpoint ID 83864

Site-Specific Points of Contact

Site Access

Sandpoint, Idaho

1. Head south on N Fifth Ave toward Cedar St - 0.2 mi
2. Turn left onto Pine St - 495 ft
3. Turn right onto S 4th Ave - 0.4 mi
4. Turn left onto Pacfic St - 236 ft
5. Turn right at the 1st cross street onto S 3rd Ave - 197 ft

Preliminary Draft for Agency Review

View looking south from north of culvert.

View of area to be boomed between a fixed dock anchor and tree.

Preliminary Draft for Agency Review

Site Lat Long:	48.256623 -116.53849 (http://www.google.com/maps/place/48.256623,-116.53849)
Strategy Objective:	Notification and contaminant collection and recovery.
Implementation:	Deploy collection boom and initiate contaminant recovey at Long Bridge. Secure upstream end of boom East Shoreline to steel post. Secure downstream end of boom West Shoreline to steel post. Vacuum truck access is good.
Site Safety Note:	Complete Job Safety Analysis.
Staging Area:	On site staging is medium. Use US 95 bridge as staging and recovery area. Equipment and vehicle parking area adjacent to lake at the collection point. No boat launch facilities. Bottle Bay Bridge boat launch is 2.0 miles away.
Field Notes:	• Last collection point on Lake Pend Oreille before Pend Oreille River. Wind conditions may make this site unsuitable for collection. • 4WD Access: **NO** Seasonal Access Only: **NO** Locked Gate: **NO**
Resources Targeted:	Public water supply, Recreation, Reservoir, Threatened and Endangered Species
Watercourse:	Lake Pend Oreille: substrate is gravel

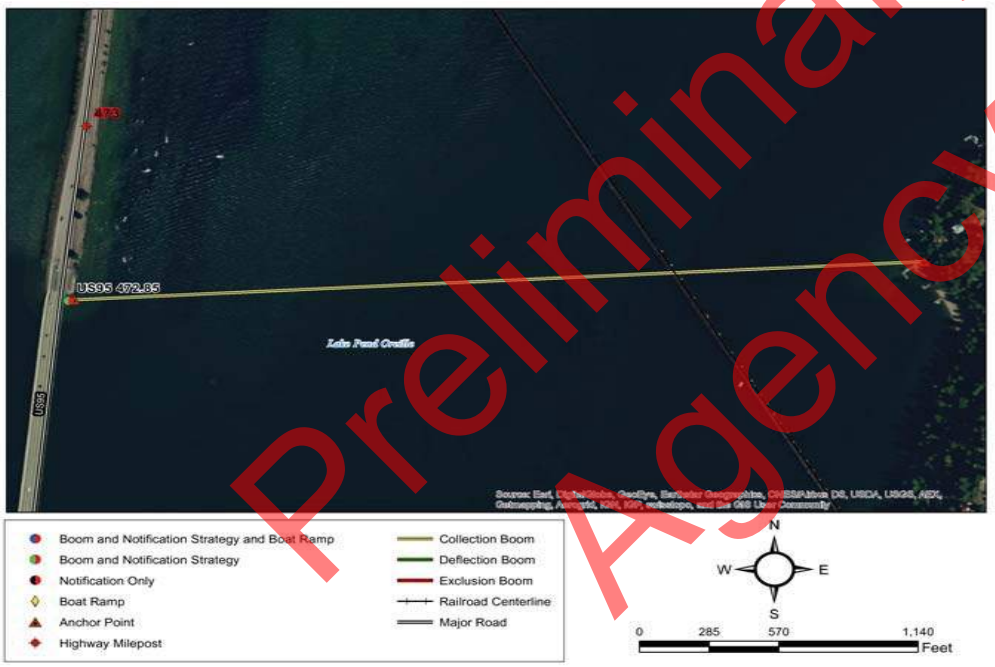

Suggested Equipment	
Quantity	Description
3500 ft.	Curtain Boom Tow Bridles
As Appropriate	Portable Skimmer; Vacuum Truck; Absorbent Boom
4375 ft.	Polypropylene Line
8	Steel Post Anchors
As Appropriate	Post pounder, shovels, knife, wood saw
None	In Water Anchors
As Appropriate	PFD work vests/rubber boots
As Appropriate	Throw bags, first aid kit
Jet boat/raft needed for strategy implementation?	Y

Suggested Personnel	
Quantity	Title (Function)
1	Booming Team Leader
1	Safety Representative
4 / 1	Haz-Mat Tech (Field Worker) / 1st Responder (Traffic Flagger)
1 / 1	Haz-Mat Tech (Boat Operator) / Haz-Mat Tech (Swiftwater)

Visited on 2016-07-16

Preliminary Draft for Agency Review

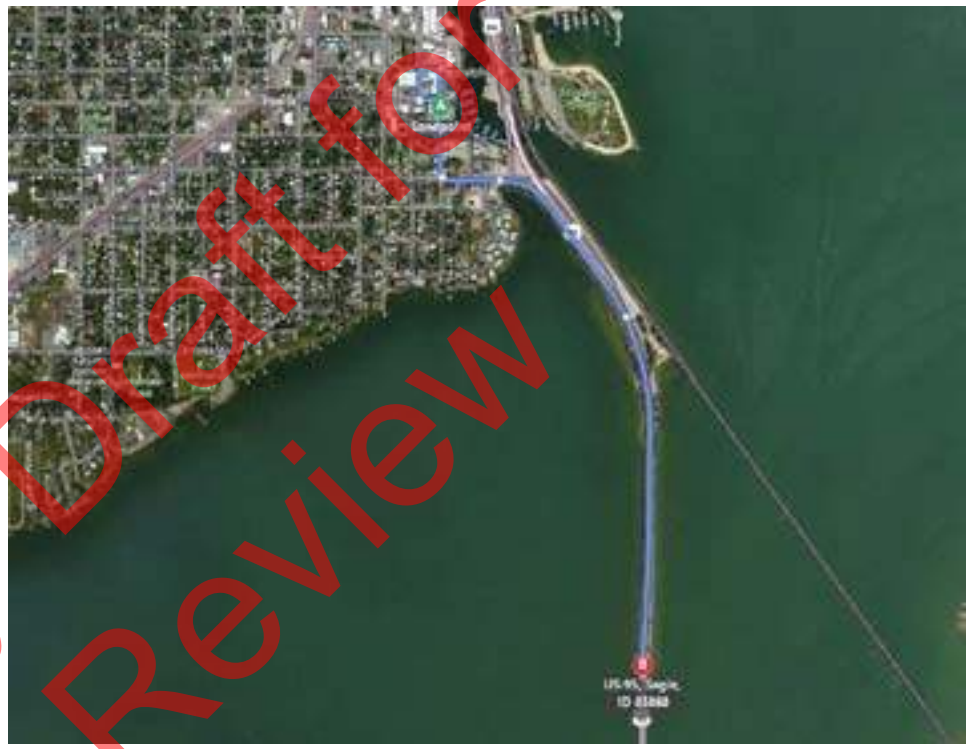

Nearest Cache: Sandpoint (2.0 miles)
Second Cache: Bonners (34.3 miles)

Nearest Address: 175 Glen Eden Rd
Sagle ID 83860

Site-Specific Points of Contact

Site Access

Sandpoint, Idaho
1. Head north on US-2 E/N Fifth Ave toward Alder St - 1.0 mi
2. Continue onto ID-200 - 361 ft
3. Take the ramp onto US-95N - .7 mi
472001 U.S. 95, Sandpoint, Idaho

Preliminary Draft for Agency Review

Looking South

Looking South from bike path

Preliminary Draft for Agency Review

Site Lat Long:	48.274217 -116.534885 (http://www.google.com/maps/place/48.274217,-116.534885)
Strategy Objective:	Notification and exclusion. Prevent contaminant from impacting sensitive area at Sandpoint Public Works surface water intake.
Implementation:	Use boom to exclude Public Water Supply. Notify City of Sandpoint Water Treament Plant.
Site Safety Note:	Complete Job Safety Analysis.
Staging Area:	No staging area. Only accessible by boat, but very close to Sandpoint City Park boat launch. No boat launch facilities. Sandpoint City Beach boat launch is 0.5 miles away.
Field Notes:	• Contact David Pafundi, with City of Sandpoint Water Treatment Plant, at 208-263-3440 to shut off intake. • Boat Ramp may be unusable in winter • 4WD Access: NO • Seasonal Access Only: NO • Locked Gate: NO
Resources Targeted:	Municipal Water Intake
Watercourse:	Lake Pend Oreille; substrate is mud; approx. depth is greater than 20 feet; slow moving; shoals

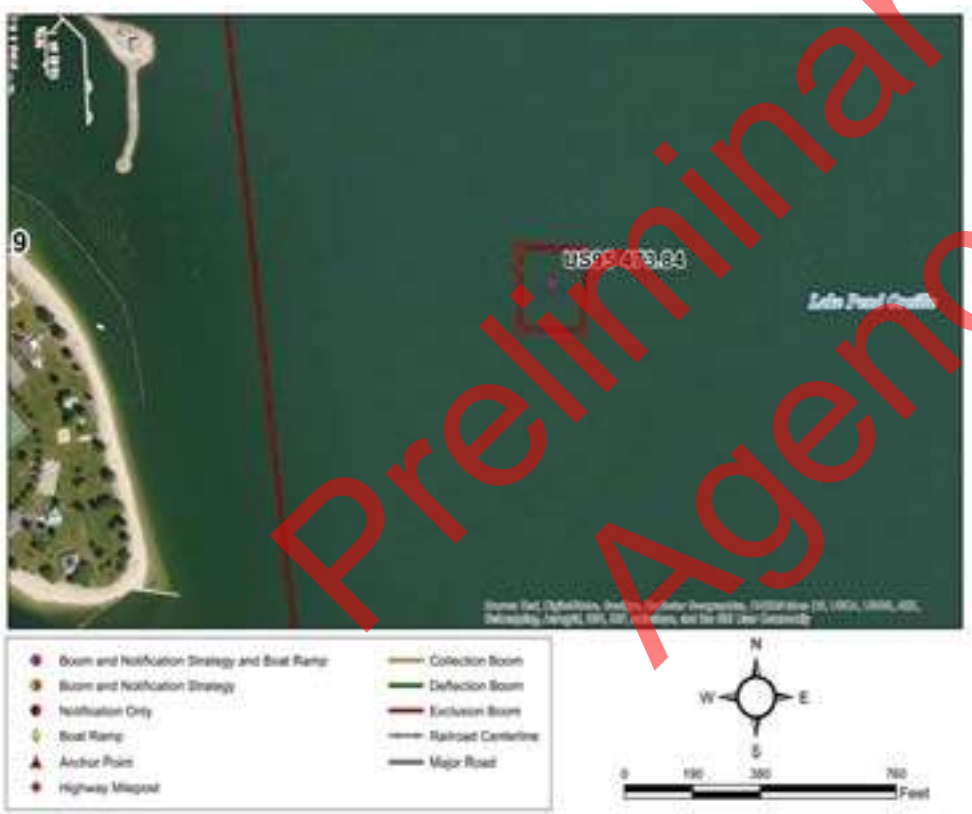

Suggested Equipment	
Quantity	Description
800 ft.	Curtain Boom Tow Bridles
As Appropriate	
1000 ft.	Polypropylene Line
0	Steel Post Anchors
As Appropriate	Post pounder, shovels, knife, wood saw
6	In Water Anchors
As Appropriate	PFD work vests/rubber boots
As Appropriate	Throw bags, first aid kit
Jet boat/raft needed for strategy implementation?	Y

Suggested Personnel	
Quantity	Title (Function)
1	Booming Team Leader
1	Safety Representative
3 / 0	Haz-Mat Tech (Field Worker) / 1st Responder (Traffic Flagger)
1 / 1	Haz-Mat Tech (Boat Operator) / Haz-Mat Tech (Swiftwater)

Preliminary Draft for Agency Review

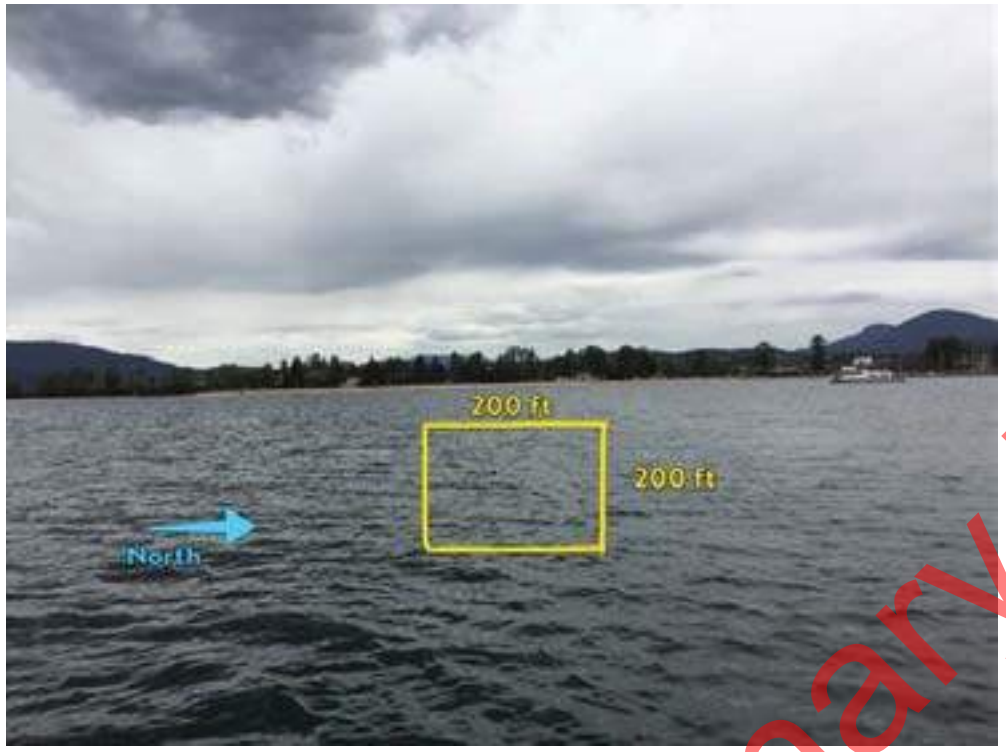

Nearest Cache: Sandpoint (1.3 miles)
Second Cache: Bonners (34.1 miles)

Nearest Address: 54 Bridge St
Sandpoint ID 83864

Site-Specific Points of Contact

David Pafundi 208 263 3440
Ryan Luttman 208 263 3407

Site Access - Use Sandpoint City Beach boat launch, directions below

Sandpoint, Idaho
1. Head south on N Fifth Ave toward Cedar St - 171 ft
2. Turn left onto Pine St 0.3 mi
3. Pine St turns left and becomes N First Ave 246 ft
4. Turn right onto Bridge St 0.2 mi
5. Turn right

Preliminary Draft for Agency Review

Photo taken from estimated point of where water intake should be, looking back at the city beach.

None

Preliminary Draft for Agency Review

USCG0018233/27

Site Lat Long:	48.273909 -116.541436 (http://www.google.com/maps/place/48.273909,-116.541436)
Strategy Objective:	Notification and contaminant collection and recovery.
Implementation:	Deploy collection boom and initiate contaminant recovery at S 4th Ave Outflow. Secure upstream end of boom North Shoreline to steel post. Secure downstream end of boom North Shoreline to fixed anchor. Vacuum truck access is poor.
Site Safety Note:	Complete Job Safety Analysis.
Staging Area:	On site staging is large. Large parking area at city beach with boat ramp. Concrete boat launch. Sandpoint City Beach boat launch is 0.3 miles away.
Field Notes:	• Boat Ramp may be unusable in winter • 4WD Access: NO • Seasonal Access Only: NO • Locked Gate: NO
Resources Targeted:	Sandpoint City Beach and Marina, recreation
Watercourse:	Lake Pend Oreille; substrate is sand; approx. depth is over 20 feet

Suggested Equipment	
Quantity	Description
2000 ft.	Curtain Boom Tow Bridles
As Appropriate	
2500 ft.	Polypropylene Line
0	Steel Post Anchors
As Appropriate	Post pounder, shovels, knife, wood saw
4	In Water Anchors
As Appropriate	PFD work vests/rubber boots
As Appropriate	Throw bags, first aid kit
Jet boat/raft needed for strategy implementation?	Y

Suggested Personnel	
Quantity	Title (Function)
1	Booming Team Leader
1	Safety Representative
3 / 1	Haz-Mat Tech (Field Worker) / 1st Responder (Traffic Flagger)
1 / 1	Haz-Mat Tech (Boat Operator) / Haz-Mat Tech (Swiftwater)

Preliminary Draft for Agency Review

USCG0018243/27

Nearest Cache: Sandpoint (1.1 miles)
Second Cache: Bonners (33.9 miles)

Nearest Address: 54 Bridge St
Sandpoint ID 83864

Site-Specific Points of Contact

Site Access

Sandpoint, Idaho
1. Head south on N Fifth Ave toward Cedar St - 171 ft
2. Turn left onto Pine St 0.3 mi
3. Pine St turns left and becomes N First Ave 246 ft
4. Turn right onto Bridge St 0.2 mi
5. Turn right

Preliminary Draft for Agency Review

USCG0018253/27

City beach

Large staging area

Preliminary Draft for Agency Review

Site Lat Long:	48.272248 -116.542879 (http://www.google.com/maps/place/48.272248,-116.542879)
Strategy Objective:	Notification and contaminant collection and recovery.
Implementation:	Sand Creek flow direction is to the south. Deploy collection boom and initiate contaminant recovery at Mouth of Sand Creek. Secure upstream end of boom River Right to rock. Secure downstream end of boom River Left to fixed anchor. Vacuum truck access is good.
Site Safety Note:	Complete Job Safety Analysis.
Staging Area:	OOn site staging is large. Large parking area for vehicles and equipment at Sandpoint City Beach parking area. Boat ramp on site. Concrete boat launch. Sandpoint City Beach boat launch is 0.1 miles away.
Field Notes:	• 4WD Access: NO • Seasonal Access Only: NO • Locked Gate: NO
Resources Targeted:	Lake Pend Orielle, Sandpoint City Beach, Marina, fish habitat, recreation
Watercourse:	Sand Creek: gradient is low; substrate is mud; approx. width is 360 ft.; approx. depth is 5 to 10 feet; channelized; slow moving

Suggested Equipment	
Quantity	Description
360 ft.	Curtain Boom Tow Bridles
As Appropriate	
450 ft.	Polypropylene Line
0	Steel Post Anchors
As Appropriate	Post pounder, shovels, knife, wood saw
0	In Water Anchors
As Appropriate	PFD work vests/rubber boots
As Appropriate	Throw bags, first aid kit
Jet boat/raft needed for strategy implementation?	Y

Suggested Personnel	
Quantity	Title (Function)
1	Booming Team Leader
1	Safety Representative
2 / 1	Haz-Mat Tech (Field Worker) / 1st Responder (Traffic Flagger)
1 / 1	Haz-Mat Tech (Boat Operator) / Haz-Mat Tech (Swiftwater)

Preliminary Draft for Agency Review

Nearest Cache: Sandpoint (1.2 miles)
Second Cache: Bonners (34.0 miles)

Nearest Address: 120 E Lake St
Sandpoint ID 83864

Site-Specific Points of Contact

Site Access

Sandpoint, Idaho

1. Head south on N Fifth Ave toward Cedar St - 171 ft
2. Turn left onto Pine St 0.3 mi
3. Pine St turns left and becomes N First Ave 246 ft
4. Turn right onto Bridge St 0.2 mi
5. Turn right

Preliminary Draft for Agency Review

view of Sandpoint City Beach boat launch from the Lake, facing east.

Parking area.

Preliminary Draft for Agency Review

Site Lat Long:	48.274021 -116.545732 (http://www.google.com/maps/place/48.274021,-116.545732)
Strategy Objective:	Notification and contaminant collection and recovery.
Implementation:	Sand Creek flow direction is to the south. Deploy collection boom and initiate contaminant recovery at Lower Sand Creek. Secure upstream end of boom River Right to fixed anchor. Secure downstream end of boom River Left to steel post. Secure upstream end of second boom River Right to fixed anchor. Secure downstream end of second boom River Left to steel post. Vacuum truck access is good.
Site Safety Note:	Complete Job Safety Analysis.
Staging Area:	On site staging is small. Parking available for vehicles and equipment on bike path along River left. Many public parking areas also in the area, but with limited space. No boat launch facilities. Sandpoint City Beach boat launch is 0.3 miles away.
Field Notes:	• Contact City of Sandpoint for access to bike path. First boom location is upstream of city beach access road bridge. Second boom location is downstream of the bridge. Both locations need equal amounts of boom (350 ft). • 4WD Access: NO • Seasonal Access Only: NO • Locked Gate: NO
Resources Targeted:	Sand Creek, Sandpoint City Beach and Marina, fish habitat, recreation area
Watercourse:	Sand Creek: gradient is low; substrate is mud; approx. width is 290 ft.; approx. depth is 5 to 10 feet; channelized; slow moving

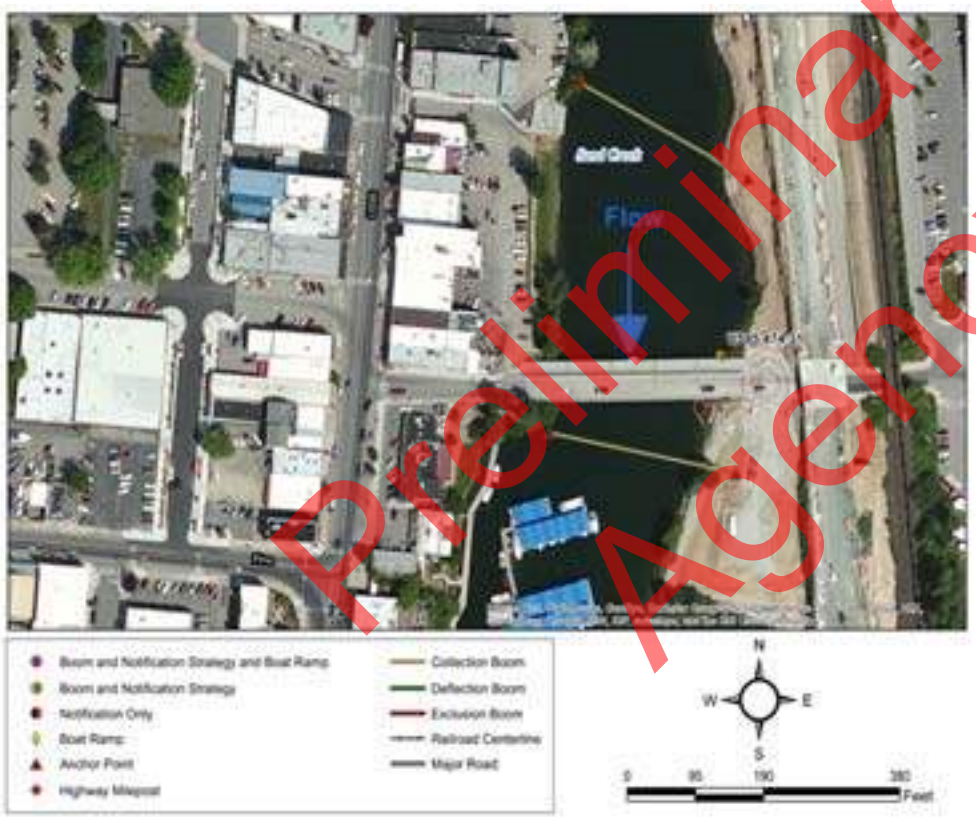

Suggested Equipment	
Quantity	Description
700 ft.	Curtain Boom Tow Bridles
As Appropriate	
500 ft.	Polypropylene Line
5	Steel Post Anchors
As Appropriate	Post pounder, shovels, knife, wood saw
None	In Water Anchors
As Appropriate	PFD work vests/rubber boots
As Appropriate	Throw bags, first aid kit
Jet boat/raft needed for strategy implementation?	Y

Suggested Personnel	
Quantity	Title (Function)
1	Booming Team Leader
1	Safety Representative
2 / 1	Haz-Mat Tech (Field Worker) / 1st Responder (Traffic Flagger)
1 / 1	Haz-Mat Tech (Boat Operator) / Haz-Mat Tech (Swiftwater)

Preliminary Draft for Agency Review

Nearest Cache: Sandpoint (0.9 miles)
Second Cache: Bonners (33.7 miles)

Nearest Address: 106 Bridge St
Sandpoint ID 83864

Site-Specific Points of Contact

Site Access

Sandpoint, Idaho

1. Head south on N Fifth Ave toward Cedar St - 171 ft
2. Turn left onto Pine St 0.3 mi
3. Pine St turns left and becomes N First Ave 246 ft
4. Turn right onto Bridge St 0.1 mi
5. Take immediate right after crossing over the bridge

Preliminary Draft for Agency Review

Looking from river left collection point towards upstream anchor.

View of the bike path. Note the locked pillar in the center of path.

Preliminary Draft for Agency Review

Cardboard Insert for

Sector 3C and 3D

Preliminary Draft for Agency Review

This page intentionally blank

Preliminary Draft for Agency Review

Sector & Map	Site ID & Highway Milepost	Railroad Milepost	Site Name	Accessible by boat at Low Water?	Nearest Boat Ramp or Staging Area
Sector 3C Sandpoint	US95 474.41	BNSF Spokane 3.02	E. Cedar St Culvert # 1	No	US95 473.87
	US95 474.45	BNSF Spokane 2.98	E. Cedar St Culvert # 2	No	US95 473.87
	US95 474.46	BNSF Spokane 2.97	E. Cedar St Culvert # 3	No	US95 473.87
	US95 474.78	BNSF Spokane 2.9	Alder St Culvert	No	US95 473.87
	US95 475.09	BNSF Kootenai 1402.96	N. 5th Ave Surface Water Outflow #1	No	US95 473.87
Sector 3D Sandpoint	US95 475.21	BNSF Kootenai 1402.75	N. 5th Ave Surface Water Outflow #2	No	US95 473.87
	US95 475.22	BNSF Kootenai 1402.74	N. 5th Ave Surface Water Outflow #3	No	US95 473.87
	US95 475.3	BNSF Kootenai 1402.66	Sand Creek Trestle	No	US95 473.87
	US95 475.32	BNSF Kootenai 1402.63	Visitor Center Culvert #1	No	US95 473.87
	US95 475.34	BNSF Kootenai 1402.6	Visitor Center Culvert #2	No	US95 473.87
	US95 475.4	BNSF Kootenai 1402.58	Visitor's Center Culvert # 3	No	US95 473.87
	US95 475.41	BNSF Kootenai 1402.55	Visitor's Center Culvert # 4	No	US95 473.87
	US95 475.42	BNSF Kootenai 1402.57	Baldy Mountain Rd Surface Water Outflow #2	No	US95 473.87
	US95 475.5	BNSF Kootenai 1402.53	Baldy Mountain Rd Surface Water Outflow #1	No	US95 473.87
	US95 475.53	BNSF Kootenai 1402.33	N. Boyer Ave and Baldy Mountain Rd.	No	US95 473.87

Preliminary Draft for Agency Review

Sector 3C Sandpoint

Go Back to Regional Map

Sector 3D Sandpoint

Go Back to Regional Map

Site Lat Long:	48.275492 -116.546815 (http://www.google.com/maps/place/48.275492,-116.546815)
Strategy Objective:	Notification and contaminant collection and recovery.
Implementation:	Deploy collection boom and initiate contaminant recovery at E. Cedar St Culvert # 1. Secure upstream end of boom West Shoreline to tree. Secure downstream end of boom West Shoreline to tree. Vacuum truck access is poor.
Site Safety Note:	Complete Job Safety Analysis.
Staging Area:	No staging area. No boat launch facilities. Sandpoint City Beach boat launch is 0.4 miles away.
Field Notes:	• 4WD Access: **NO** Seasonal Access Only: **NO** Locked Gate: **NO**
Resources Targeted:	Wildlife Habitat, Threatened and Endangered Species, Recreational Use, Reservoir or Lake
Watercourse:	Lake Pend Oreille:

Suggested Equipment	
Quantity	Description
50 ft.	Curtain Boom Tow Bridles
As Appropriate	Absorbent Boom
65 ft.	Polypropylene Line
None	Steel Post Anchors
As Appropriate	Post pounder, shovels, knife, wood saw
None	In Water Anchors
As Appropriate	PFD work vests/rubber boots
As Appropriate	Throw bags, first aid kit
Jet boat/raft needed for strategy implementation?	Y

Suggested Personnel	
Quantity	Title (Function)
1	Booming Team Leader
1	Safety Representative
2 / None	Haz-Mat Tech (Field Worker) / 1st Responder (Traffic Flagger)
1 / 1	Haz-Mat Tech (Boat Operator) / Haz-Mat Tech (Swiftwater)

Visited on 2016-08-01

Preliminary Draft for Agency Review

USCG0018383/27

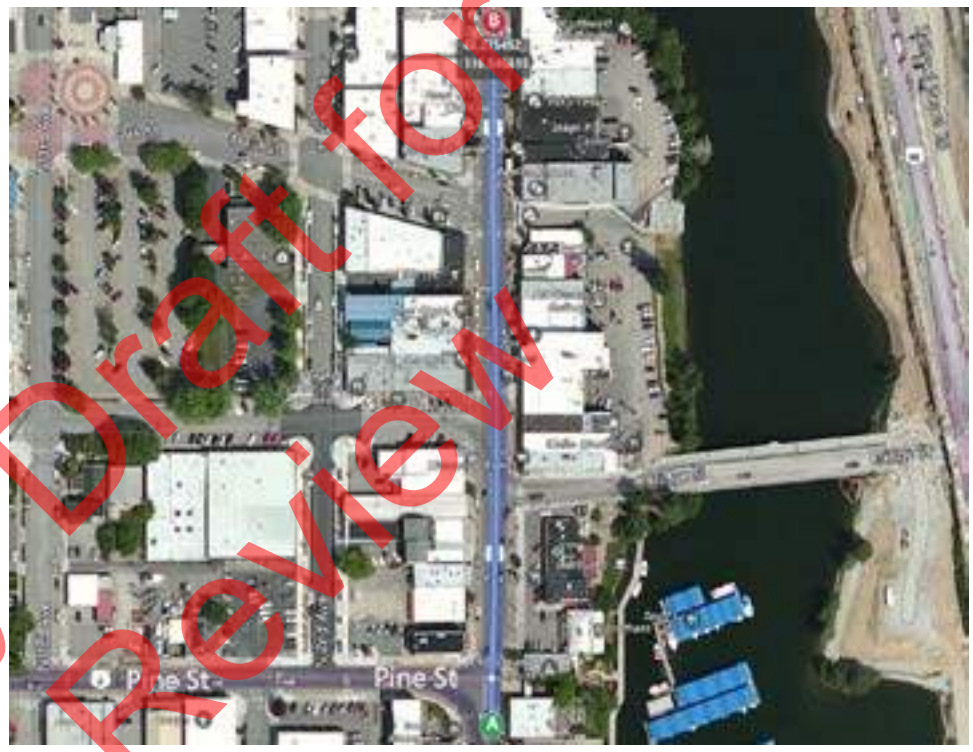

Nearest Cache: Sandpoint (1.1 miles)
Second Cache: Bonners (33.6 miles)

Nearest Address: 334 N. Fifth Ave
Sandpoint ID 83864

Site-Specific Points of Contact

Site Access

Sandpoint, Idaho
1. Head south on N Fifth Ave toward Cedar St - 171 ft
2. Turn left onto Cedar St - 0.3 mi
3. Turn right onto N First Ave - 322 ft

Preliminary Draft for Agency Review

E. Cedar St Culvert # 2

Back to Sector Map Back to Summary Table (BNSF Spokane 2.98) **US95 474.45**

Site Lat Long:	48.27606 -116.547529 (http://www.google.com/maps/place/48.27606,-116.547529)
Strategy Objective:	Notification and contaminant collection and recovery.
Implementation:	Deploy collection boom and initiate contaminant recovery at E. Cedar St Culvert # 2. Secure upstream end of boom West Shoreline to fixed anchor. Secure downstream end of boom West Shoreline to fixed anchor. Vacuum truck access is poor.
Site Safety Note:	Complete Job Safety Analysis.
Staging Area:	No staging area. No boat launch facilities. Sandpoint City Beach boat launch is 0.7 miles away.
Field Notes:	• 4WD Access: **NO** Seasonal Access Only: **NO** Locked Gate: **NO**
Resources Targeted:	Wildlife Habitat, Threatened and Endangered Species, Recreational Use, Reservoir or Lake
Watercourse:	Lake Pend Oreille:

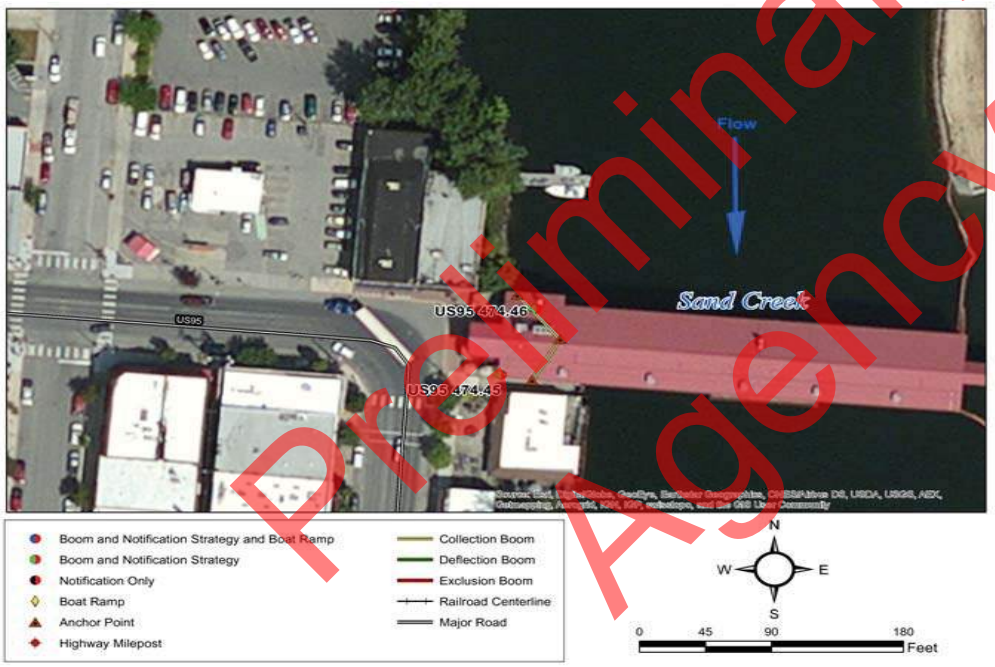

Suggested Equipment	
Quantity	Description
50 ft.	Curtain Boom Tow Bridles
As Appropriate	Absorbent Boom
65 ft.	Polypropylene Line
None	Steel Post Anchors
As Appropriate	Post pounder, shovels, knife, wood saw
None	In Water Anchors
As Appropriate	PFD work vests/rubber boots
As Appropriate	Throw bags, first aid kit
Jet boat/raft needed for strategy implementation?	Y

Suggested Personnel	
Quantity	Title (Function)
1	Booming Team Leader
1	Safety Representative
2 / None	Haz-Mat Tech (Field Worker) / 1st Responder (Traffic Flagger)
1 / 1	Haz-Mat Tech (Boat Operator) / Haz-Mat Tech (Swiftwater)

Visited on 2016-08-01

Preliminary Draft for Agency Review

USCG0018403/27

Nearest Cache: Sandpoint (0.9 miles)
Second Cache: Bonners (33.5 miles)

rest Address: 334 N 1St Ave
Sandpoint ID 83864

Site-Specific Points of Contact

Site Access

Sandpoint, Idaho
2. Turn left onto Pine St 0.3 mi
3. Pine St turns left and becomes N First Ave
4. Destination will be on the right just before Ceder St

Preliminary Draft for Agency Review

View of the southern culvert under bridge/restaurant.

View from south of both culverts facing north.

Preliminary Draft for Agency Review

Site Lat Long:	48.276208 -116.547452 (http://www.google.com/maps/place/48.276208,-116.547452)
Strategy Objective:	Notification and contaminant collection and recovery.
Implementation:	Deploy collection boom and initiate contaminant recovery at E. Cedar St Culvert # 3. Secure upstream end of boom West Shoreline to bridge piling. Secure downstream end of boom West Shoreline to bridge piling. Vacuum truck access is poor.
Site Safety Note:	Complete Job Safety Analysis.
Staging Area:	No staging area. No boat launch facilities. Sandpoint City Beach boat launch is 0.7 miles away.
Field Notes:	• 4WD Access: NO • Seasonal Access Only: NO • Locked Gate: NO
Resources Targeted:	Wildlife Habitat, Threatened and Endangered Species, Recreational Use, Reservoir or Lake
Watercourse:	Lake Pend Oreille:

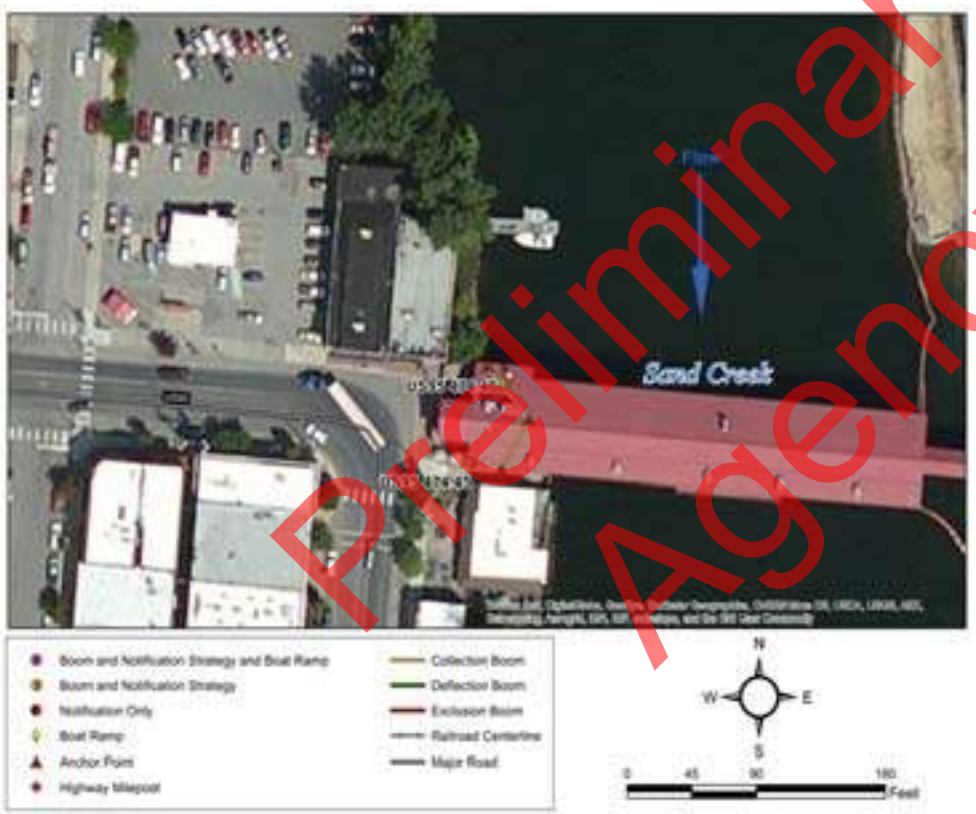

Suggested Equipment	
Quantity	Description
None	Curtain Boom Tow Bridles
As Appropriate	
	Polypropylene Line
None	Steel Post Anchors
As Appropriate	Post pounder, shovels, knife, wood saw
None	In Water Anchors
As Appropriate	PFD work vests/rubber boots
As Appropriate	Throw bags, first aid kit
Jet boat/raft needed for strategy implementation?	Y

Suggested Personnel	
Quantity	Title (Function)
1	Booming Team Leader
1	Safety Representative
2 / 0	Haz-Mat Tech (Field Worker) / 1st Responder (Traffic Flagger)
1 / 1	Haz-Mat Tech (Boat Operator) / Haz-Mat Tech (Swiftwater)

Preliminary Draft for Agency Review

USCG0018433/27

Nearest Cache: Sandpoint (0.9 miles)
Second Cache: Bonners (33.5 miles)

Nearest Address: 334 N 1St Ave
Sandpoint ID 83864

Site-Specific Points of Contact

Site Access

Sandpoint, Idaho
1. Head north on US-2 E/N Fifth Ave toward Alder St - 1.0 mi
2. Turn left onto Pine St 0.3 mi
3. Pine St turns left and becomes N First Ave
4. Destinat

Preliminary Draft for Agency Review

Image of concrete submerged culvert.

None

Preliminary Draft for Agency Review

Site Lat Long:	48.277149 -116.547759 (http://www.google.com/maps/place/48.277149,-116.547759)
Strategy Objective:	Notification and contaminant collection and recovery.
Implementation:	Deploy collection boom and initiate contaminant recovery at Alder St Culvert. Secure upstream end of boom to West Shoreline to steel post. Secure downstream end of boom to West Shoreline to steel post. Vacuum truck access is poor.
Site Safety Note:	Complete Job Safety Analysis.
Staging Area:	No staging area. No boat launch facilities. Sandpoint City Beach boat launch is 0.8 miles away.
Field Notes:	• 4WD Access: NO • Seasonal Access Only: NO • Locked Gate: NO
Resources Targeted:	Wildlife Habitat, Threatened and Endangered Species, Recreational Use, Reservoir or Lake
Watercourse:	Lake Pend Oreille:

Suggested Equipment	
Quantity	Description
50 ft.	Curtain Boom Tow Bridles
As Appropriate	
65 ft.	Polypropylene Line
6	Steel Post Anchors
As Appropriate	Post pounder, shovels, knife, wood saw
None	In Water Anchors
As Appropriate	PFD work vests/rubber boots
As Appropriate	Throw bags, first aid kit
Jet boat/raft needed for strategy implementation?	Y

Suggested Personnel	
Quantity	Title (Function)
1	Booming Team Leader
1	Safety Representative
2 / 0	Haz-Mat Tech (Field Worker) / 1st Responder (Traffic Flagger)
1 / 1	Haz-Mat Tech (Boat Operator) / Haz-Mat Tech (Swiftwater)

Preliminary Draft for Agency Review

Nearest Cache: Sandpoint (1.0 miles)
Second Cache: Bonners (33.4 miles)

Nearest Address: 502 North 2nd Avenue
Sandpoint ID 83864

Site-Specific Points of Contact

Site Access

Sandpoint, Idaho

1. Head east on Pine St toward S 1st Ave- 141 ft
2. Pine St turns left and becomes N First Ave- 0.2 mi
3. N First Ave turns left and becomes Cedar St- 220 ft
4. Turn right onto N 2nd Ave- 253 ft
5. Turn right- 184 ft
6. Turn left to reach destination

Preliminary Draft for Agency Review

View from south facing north.

View from north of culverts facing south.

Preliminary Draft for Agency Review

Site Lat Long:	48.281625 -116.552419 (http://www.google.com/maps/place/48.281625-116.552419)
Strategy Objective:	Notification and contaminant collection and recovery.
Implementation:	Sand Creek flow direction is to the southeast. Deploy collection boom and initiate contaminant recovery at Culvert just North of Gas n Go, North of Larch St. on Hwy 2/200. Secure upstream end of boom River Right to tree. Secure downstream end of boom River Right to tree. Vacuum truck access is poor.
Site Safety Note:	Complete Job Safety Analysis. Steep embankment with loose screen.
Staging Area:	On site staging is large. Large parking lot of Gas n Go. No boat launch facilities. Sandpoint City Beach boat launch is 1.3 miles away.
Field Notes:	In 2015, this area was investigated by ID DEQ for petroleum products seeping into Sandcreek from an adjacent gasoline station. ● 4WD Access: NO ● Seasonal Access Only: NO ● Locked Gate: NO
Resources Targeted:	Sand Creek and wetlands
Watercourse:	Sand Creek: gradient is low; substrate is gravel; approx. width is 840 ft.; approx. depth is 5 to 10 feet; slow moving; channelized

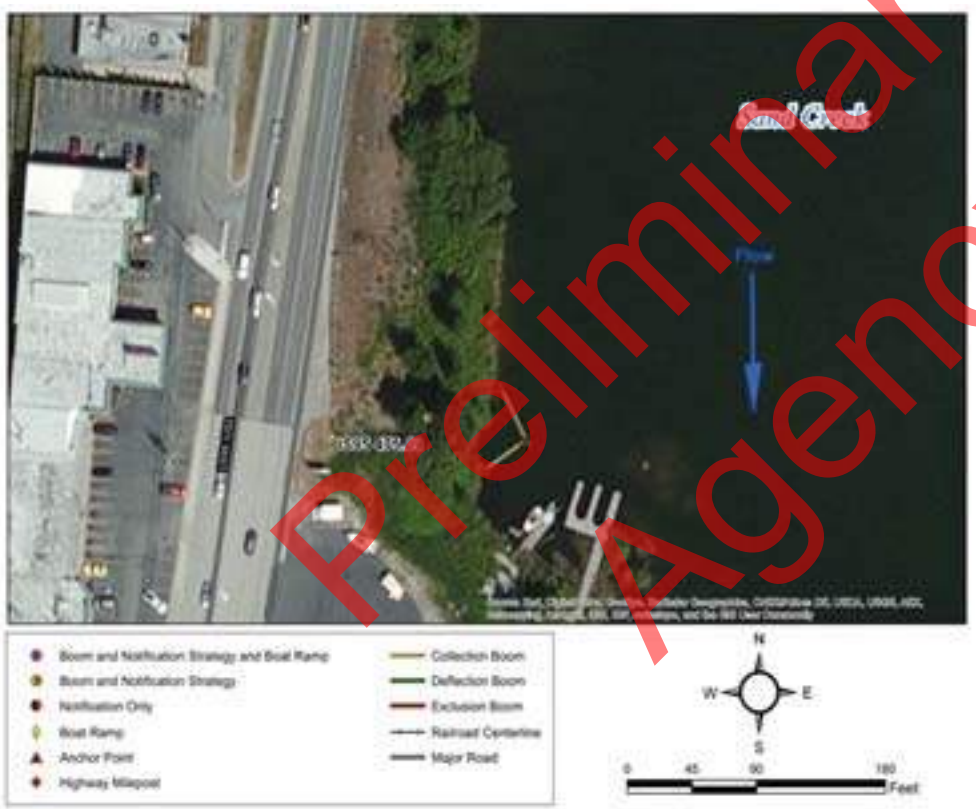

Suggested Equipment	
Quantity	Description
None	Curtain Boom Tow Bridles
As Appropriate	
100 ft.	Polypropylene Line
None	Steel Post Anchors
As Appropriate	Post pounder, shovels, knife, wood saw
1	In Water Anchors
As Appropriate	PFD work vests/rubber boots
As Appropriate	Throw bags, first aid kit
Jet boat/raft needed for strategy implementation?	Y

Suggested Personnel	
Quantity	Title (Function)
1	Booming Team Leader
1	Safety Representative
2 / 0	Haz-Mat Tech (Field Worker) / 1st Responder (Traffic Flagger)
1 / 1	Haz-Mat Tech (Boat Operator) / Haz-Mat Tech (Swiftwater)

Preliminary Draft for Agency Review

Nearest Cache: Sandpoint (1.1 miles)
Second Cache: Bonners (32.8 miles)

Nearest Address: 830 5th Ave
Sandpoint ID 83864

Site-Specific Points of Contact

Site Access

Sandpoint, Idaho
1. Head north on N Fifth Ave toward Alder St - 0.3 mi
830 North Fifth Avenue, Sandpoint, Idaho

Preliminary Draft for Agency Review

Looking Southwest towards outflow area of culvert, closer view.

Looking Southwest towards outflow area of culvert.

Preliminary Draft for Agency Review

Site Lat Long:	48.283483 -116.552268 (http://www.google.com/maps/place/48.283483,-116.552268)
Strategy Objective:	Notification and contaminant collection and recovery.
Implementation:	Sand Creek flow direction is to the south. Deploy collection boom and initiate contaminant recovery at Sandpoint Visitor Center. Secure upstream end of boom River Right to tree. Secure downstream end of boom River Right to tree. Vacuum truck access is poor.
Site Safety Note:	Complete Job Safety Analysis.
Staging Area:	No staging area. Visitor Center Parking Area. No boat launch facilities. Sandpoint City Beach boat launch is 1.4 miles away.
Field Notes:	• 4WD Access: NO • Seasonal Access Only: NO • Locked Gate: NO Work this strategy in conjunction with the adjacent US95 475.22
Resources Targeted:	Wildlife Habitat, Threatened and Endangered Species, Recreational Use, Reservoir or Lake
Watercourse:	Sand Creek: gradient is low; substrate is gravel; approx. width is 450 ft.; approx. depth is 5 to 10 feet

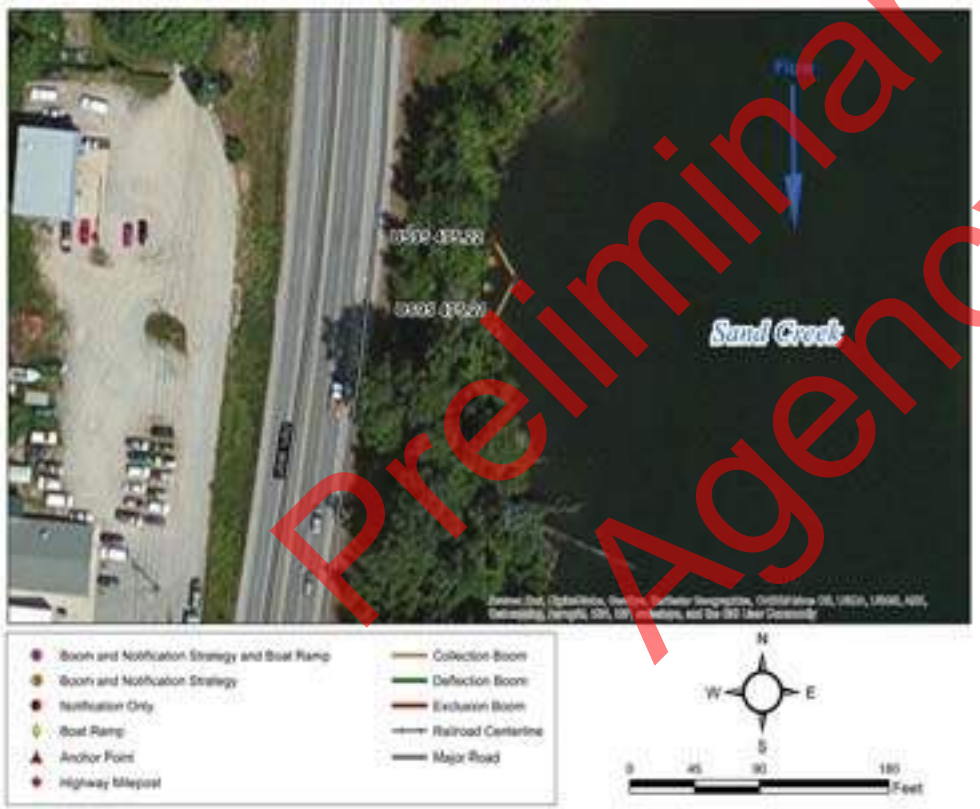

Suggested Equipment	
Quantity	Description
None	Curtain Boom Tow Bridles
As Appropriate	
	Polypropylene Line
None	Steel Post Anchors
As Appropriate	Post pounder, shovels, knife, wood saw
None	In Water Anchors
As Appropriate	PFD work vests/rubber boots
As Appropriate	Throw bags, first aid kit
Jet boat/raft needed for strategy implementation?	Y

Suggested Personnel	
Quantity	Title (Function)
1	Booming Team Leader
1	Safety Representative
2 / 1	Haz-Mat Tech (Field Worker) / 1st Responder (Traffic Flagger)
1 / 1	Haz-Mat Tech (Boat Operator) / Haz-Mat Tech (Swiftwater)

Preliminary Draft for Agency Review

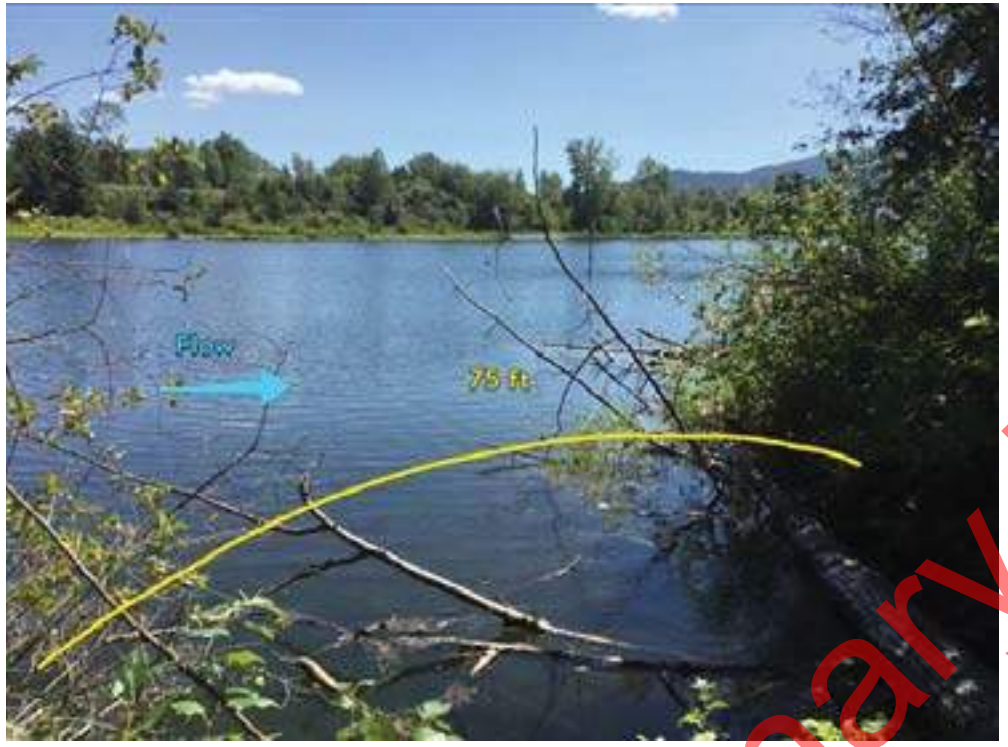

Nearest Cache: Sandpoint (1.2 miles)
Second Cache: Bonners (32.7 miles)

Nearest Address: 915 5Th Ave
Sandpoint ID 83864

Site-Specific Points of Contact

Site Access

Sandpoint, Idaho
1. Head north on N Fifth Ave toward Alder St - 0.4 mi
2. Turn left to stay on N Fifth Ave - 16 ft
1005 North Fifth Avenue, Sandpoint, Idaho

Preliminary Draft for Agency Review

Metal pipe culvert 10+ ft from shore up embankment. Pipe diameter 8 inches.

Concrete culvert on shoreline of river, but still difficult to access from water. Closest to Visitor Center.

Preliminary Draft for Agency Review

Site Lat Long:	48.28353 -116.552259 (http://www.google.com/maps/place/48.28353,-116.552259)
Strategy Objective:	Notification and contaminant collection and recovery.
Implementation:	Sand Creek flow direction is to the south. Deploy collection boom and initiate contaminant recovery at Surface Water Outflow. Secure upstream end of boom River Right to tree. Secure downstream end of boom River Right to tree. Vacuum truck access is poor.
Site Safety Note:	Complete Job Safety Analysis.
Staging Area:	No staging area. Steep embankment next to highway. Staging area minimum to none. Gravel boat launch. Sandpoint City Beach boat launch is 1.4 miles away.
Field Notes:	• 4WD Access: NO • Seasonal Access Only: NO • Locked Gate: NO Work this strategy in conjunction with the adjacent US95 475.21
Resources Targeted:	Wildlife Habitat, Threatened and Endangered Species, Recreational Use, Reservoir or Lake
Watercourse:	Sand Creek: gradient is low; substrate is gravel; approx. width is 450 ft.; approx. depth is 5 to 10 feet; slow moving

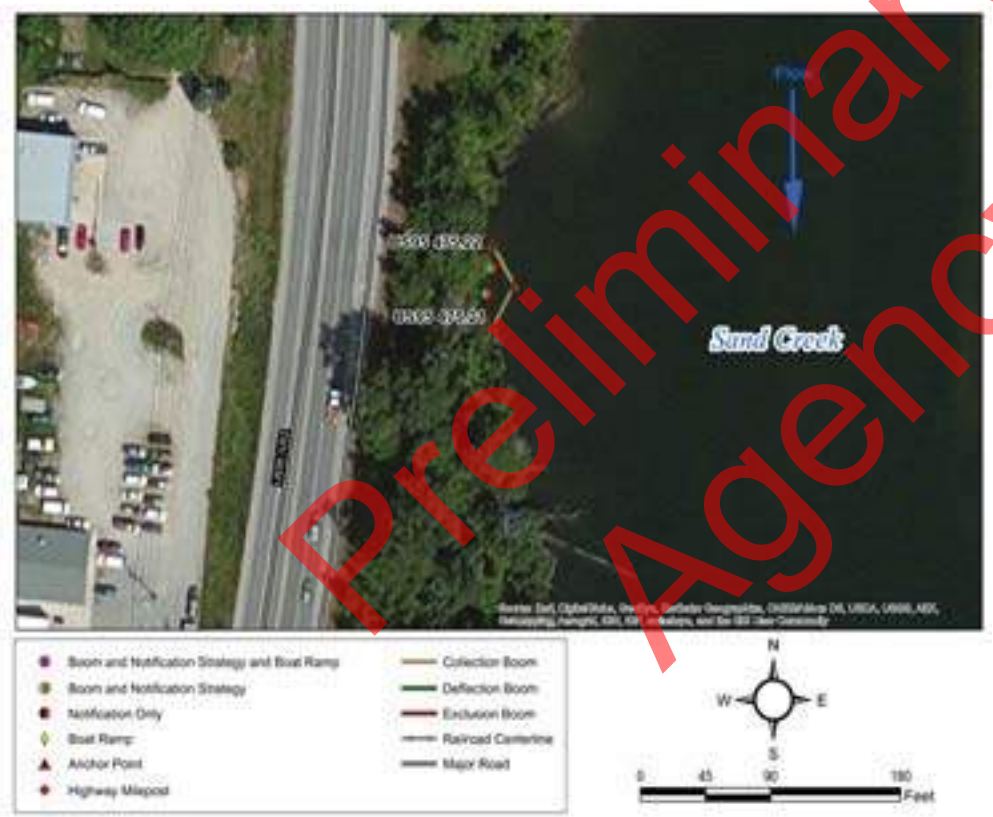

Suggested Equipment	
Quantity	Description
100 ft.	Curtain Boom Tow Bridles
As Appropriate	
125 ft.	Polypropylene Line
None	Steel Post Anchors
As Appropriate	Post pounder, shovels, knife, wood saw
None	In Water Anchors
As Appropriate	PFD work vests/rubber boots
As Appropriate	Throw bags, first aid kit
Jet boat/raft needed for strategy implementation? Y	

Suggested Personnel	
Quantity	Title (Function)
1	Booming Team Leader
1	Safety Representative
2 / 1	Haz-Mat Tech (Field Worker) / 1st Responder (Traffic Flagger)
1 / 1	Haz-Mat Tech (Boat Operator) / Haz-Mat Tech (Swiftwater)

Preliminary Draft for Agency Review

Nearest Cache: Sandpoint (1.2 miles)
Second Cache: Bonners (32.7 miles)

Nearest Address: 915 5Th Ave
Sandpoint ID 83864

Site-Specific Points of Contact

Site Access

Sandpoint, Idaho
1. Head north on N Fifth Ave toward Alder St - 0.4 mi
2. Turn left to stay on N Fifth Ave - 16 ft
1005 North Fifth Avenue, Sandpoint, Idaho

Preliminary Draft for Agency Review

Smaller metal pipe culvert, closer to parking lot.

Picture oriented viewing east/south east.

Preliminary Draft for Agency Review

Site Lat Long:	48.285618 -116.551169 (http://www.google.com/maps/place/48.285618,-116.551169)
Strategy Objective:	Notification and contaminant collection and recovery.
Implementation:	Sand Creek flow direction is to the south. Deploy collection boom and initiate contaminant recovery at Sand Creek Trestle. Secure upstream end of boom River Right to tree. Secure downstream end of boom River Left to steel post. Vacuum truck access is good.
Site Safety Note:	Complete Job Safety Analysis.
Staging Area:	On site staging is medium. Parking for vehicles and equipment along walking path on River left below the trestle. Additional parking on River right at the Sandpoint Visitors Center. No boat launch facilities. Sandpoint City Beach boat launch is 1.5 miles away.
Field Notes:	• Use Sandpoint City Beach boat ramp for access or Sand Creek Bike trail at intersection with US95 • 4WD Access: **NO** Seasonal Access Only: **NO** Locked Gate: **YES**
Resources Targeted:	Sand Creek, Sandpoint City Beach and Marina, fish habitat, recreation
Watercourse:	Sand Creek: gradient is low; substrate is mud; approx. width is 250 ft.; approx. depth is 5 to 10 feet; channelized; slow moving

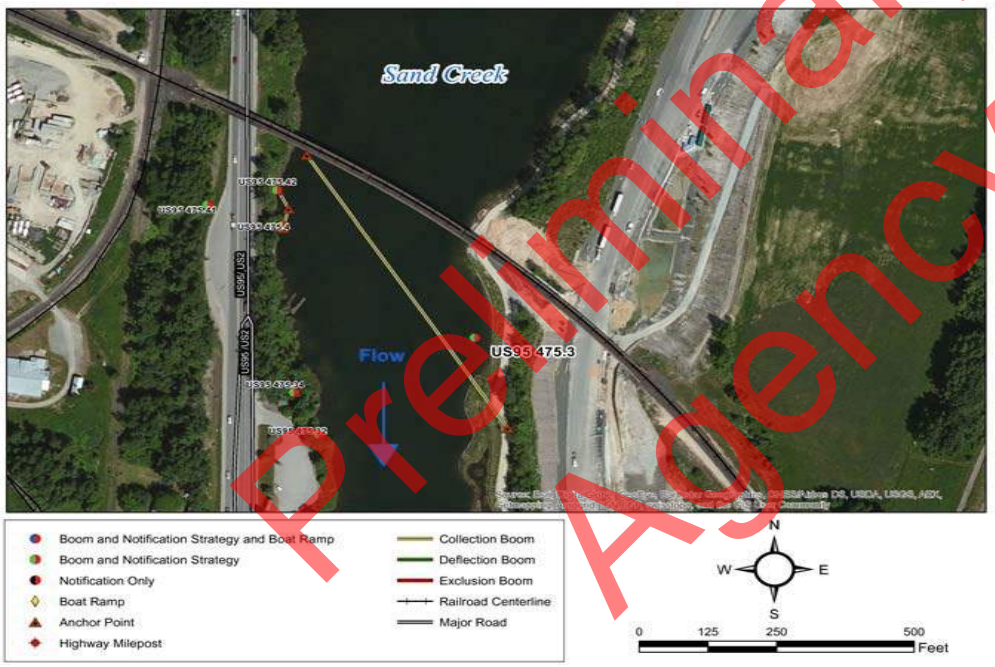

Suggested Equipment	
Quantity	Description
750 ft.	Curtain Boom Tow Bridles
As Appropriate	Vacuum Truck; Portable Skimmer
1000 ft.	Polypropylene Line
5	Steel Post Anchors
As Appropriate	Post pounder, shovels, knife, wood saw
None	In Water Anchors
As Appropriate	PFD work vests/rubber boots
As Appropriate	Throw bags, first aid kit
Jet boat/raft needed for strategy implementation?	Y

Suggested Personnel	
Quantity	Title (Function)
1	Booming Team Leader
1	Safety Representative
2 / 1	Haz-Mat Tech (Field Worker) / 1st Responder (Traffic Flagger)
1 / 1	Haz-Mat Tech (Boat Operator) / Haz-Mat Tech (Swiftwater)

Visited on 2016-06-30

Preliminary Draft for Agency Review

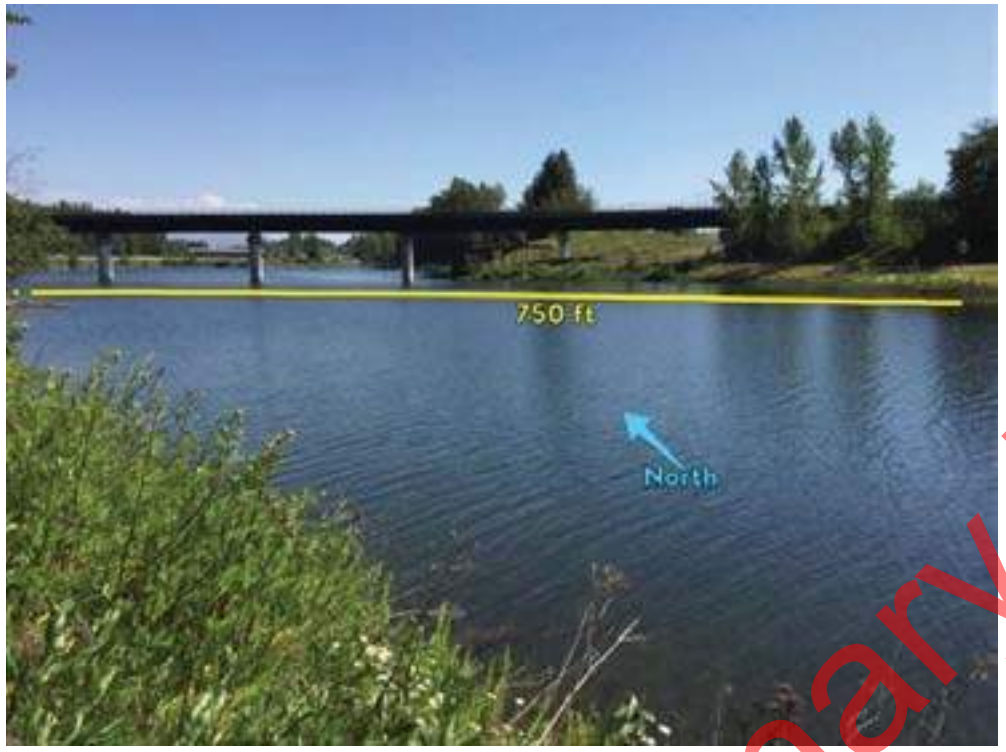

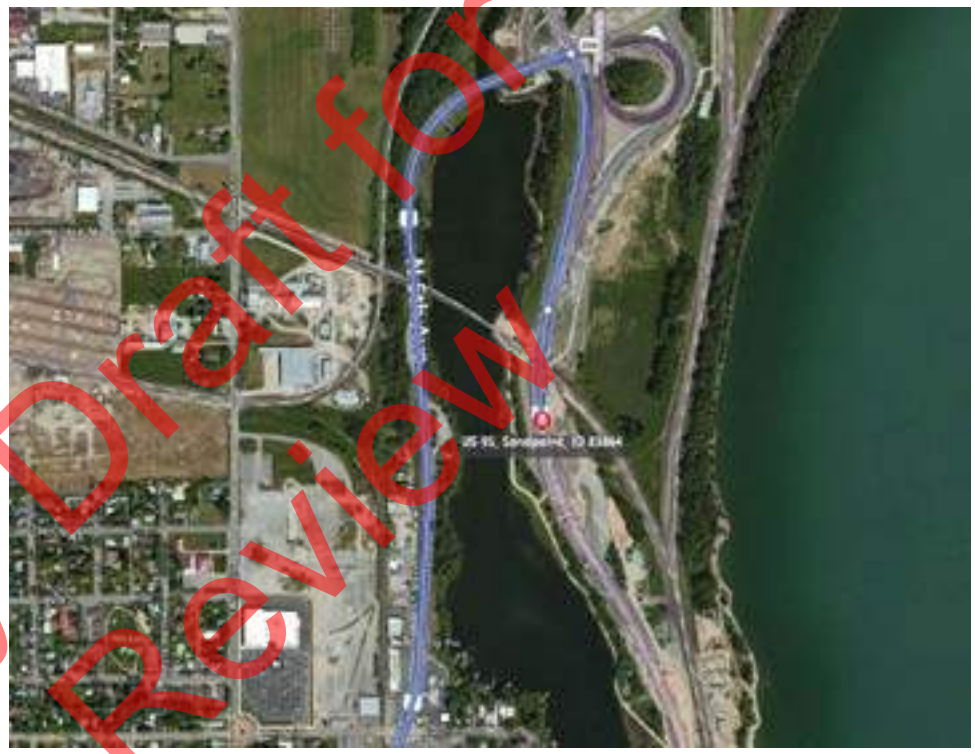

Nearest Cache: Sandpoint (1.3 miles)
Second Cache: Bonners (32.6 miles)

Nearest Address: 1125 5th Ave
Sandpoint ID 83864

Site-Specific Points of Contact

Site Access

Sandpoint, Idaho
1. Head north on US-2 E/N Fifth Ave toward Alder St
2. Continue to follow US-2 E- 1.0 mi
3. Turn right onto the US-95 S ramp- 0.3 mi
4. Merge onto US-95/Sandpoint

Preliminary Draft for Agency Review

Looking north from River right towards the trestle.

Looking at River left and city bike path.

Preliminary Draft for Agency Review

Site Lat Long:	48.284992 -116.552249 (http://www.google.com/maps/place/48.284992,-116.552249)
Strategy Objective:	Notification and contaminant collection and recovery.
Implementation:	Sand Creek flow direction is to the south. Deploy collection boom and initiate contaminant recovery at Visitor Center Culvert. Secure upstream end of boom River Right to tree. Secure downstream end of boom River Right to tree. Vacuum truck access is good.
Site Safety Note:	Complete Job Safety Analysis.
Staging Area:	No staging area. Visitor's Center Parking Area. No boat launch facilities. Sandpoint City Beach boat launch is 1.5 miles away.
Field Notes:	• Below informational signs at Visitor's Center. • Marshy shoreline; densely vegetated. • 4WD Access: NO • Seasonal Access Only: NO • Locked Gate: NO
Resources Targeted:	Wildlife Habitat, Threatened and Endangered Species, Recreational Use, Reservoir or Lake
Watercourse:	Sand Creek: gradient is low; substrate is gravel; approx. width is 270 ft.; approx. depth is 5 to 10 feet; slow moving

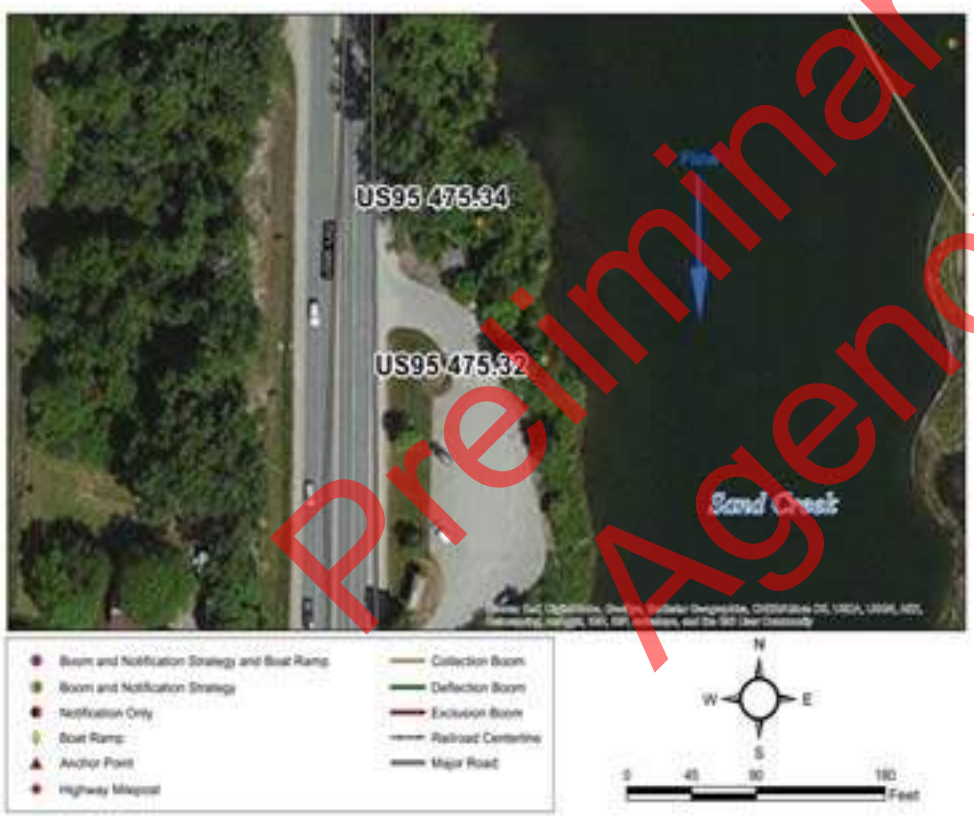

Suggested Equipment	
Quantity	Description
50 ft.	Curtain Boom Tow Bridles
As Appropriate	
75 ft.	Polypropylene Line
None	Steel Post Anchors
As Appropriate	Post pounder, shovels, knife, wood saw
None	In Water Anchors
As Appropriate	PFD work vests/rubber boots
As Appropriate	Throw bags, first aid kit
Jet boat/raft needed for strategy implementation? Y	

Suggested Personnel	
Quantity	Title (Function)
1	Booming Team Leader
1	Safety Representative
2 / 0	Haz-Mat Tech (Field Worker) / 1st Responder (Traffic Flagger)
1 / 1	Haz-Mat Tech (Boat Operator) / Haz-Mat Tech (Swiftwater)

Preliminary Draft for Agency Review

Nearest Cache: Sandpoint (1.3 miles)
Second Cache: Bonners (32.6 miles)

Nearest Address: 1125 5th Ave
Sandpoint ID 83864

Site-Specific Points of Contact

Site Access

Sandpoint, Idaho
1. Head orth on N fifth Ave toward Alder St - 0.4 mi
2. Turn left to stay on N Fifth Ave - 358 ft
1125 North Fifth Avenue, Sanpoint, Idaho

Preliminary Draft for Agency Review

14 inch diameter metal pipe culvert, roughly 10+ ft from shoreline.

View from directly in front of culvert on shoreline overlooking potential boom containment site.

Preliminary Draft for Agency Review

Site Lat Long:	48.285224 -116.552465 (http://www.google.com/maps/place/48.285224,-116.552465)
Strategy Objective:	Notification and contaminant collection and recovery.
Implementation:	Sand Creek flow direction is to the south. Deploy collection boom and initiate contaminant recovery at Visitor Center Culvert 24 inch pipe and seep. Secure upstream end of boom River Right to tree. Secure downstream end of boom River Right to tree. Vacuum truck access is poor.
Site Safety Note:	Complete Job Safety Analysis.
Staging Area:	On site staging is medium. Visitor's Center Parking area, steep embankments and marshy shoreline. No boat launch facilities. Sandpoint City Beach boat launch is 1.5 miles away.
Field Notes:	• Seep located 20 guard rail posts until inline with wooden weirs and 15+ from shoreline. • 4WD Access: NO • Seasonal Access Only: NO • Locked Gate: NO
Resources Targeted:	Wildlife Habitat, Threatened and Endangered Species, Recreational Use, Reservoir or Lake
Watercourse:	Sand Creek: gradient is low; substrate is gravel; approx. width is 270 ft.; approx. depth is 5 to 10 feet; slow moving

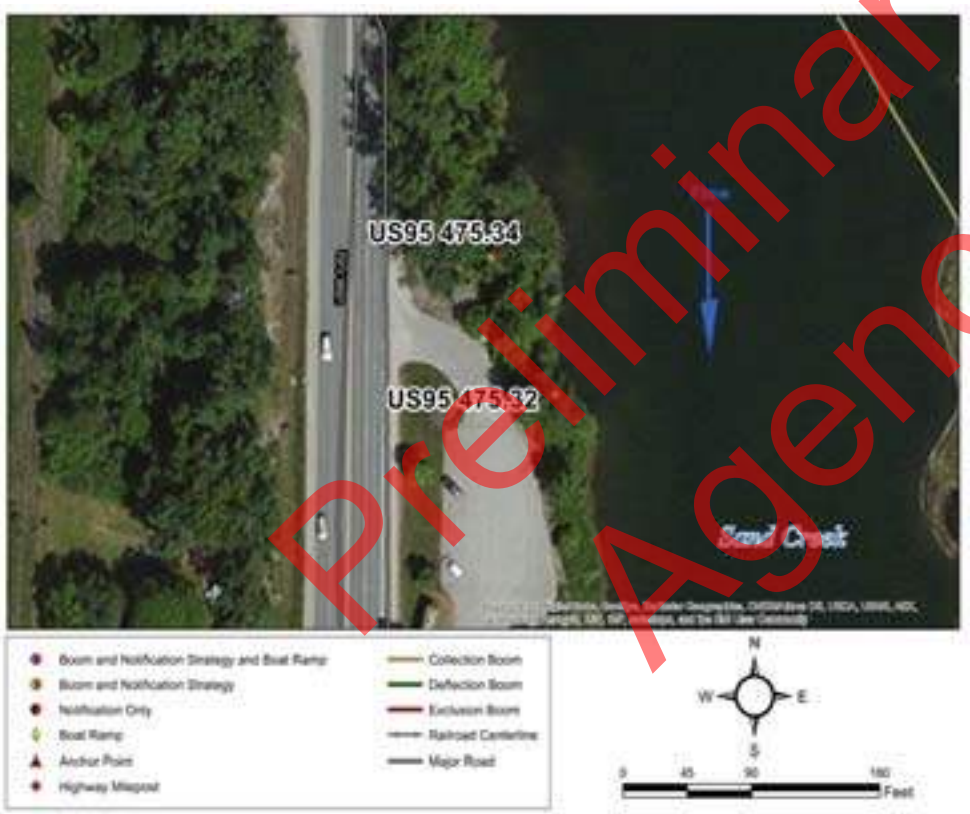

Suggested Equipment	
Quantity	Description
None	Curtain Boom Tow Bridles
As Appropriate	
	Polypropylene Line
None	Steel Post Anchors
As Appropriate	Post pounder, shovels, knife, wood saw
None	In Water Anchors
As Appropriate	PFD work vests/rubber boots
As Appropriate	Throw bags, first aid kit
Jet boat/raft needed for strategy implementation?	Y

Suggested Personnel	
Quantity	Title (Function)
1	Booming Team Leader
1	Safety Representative
1 / 0	Haz-Mat Tech (Field Worker) / 1st Responder (Traffic Flagger)
1 / 1	Haz-Mat Tech (Boat Operator) / Haz-Mat Tech (Swiftwater)

Preliminary Draft for Agency Review

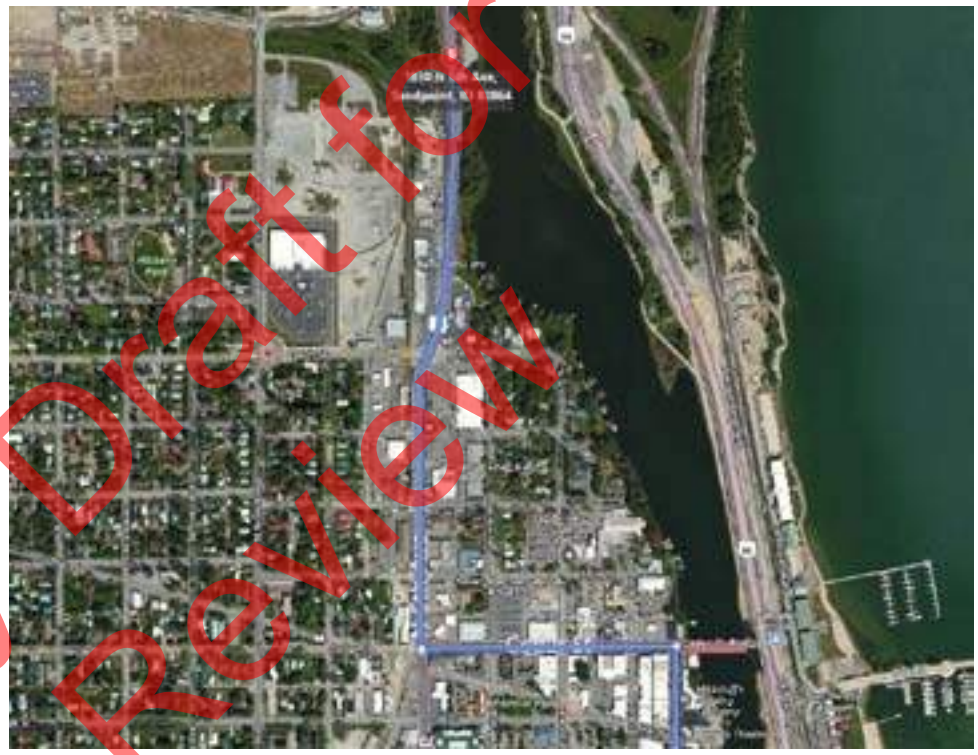

Nearest Cache: Sandpoint (1.3 miles)
Second Cache: Bonners (32.6 miles)

Nearest Address: 1125 5th Ave
Sandpoint ID 83864

Site-Specific Points of Contact

Site Access

Sandpoint, Idaho
1. Head orth on N fifth Ave toward Alder St - 0.4 mi
2. Turn left to stay on N Fifth Ave - 358 ft
1125 North Fifth Avenue, Sandpoint, Idaho

Preliminary Draft for Agency Review

24 inch metal pipe culvert below gazebo, 15+ ft from shore.

Photo taken from embankment overlooking step. Montana rail link bridge in background for orientation.

Preliminary Draft for Agency Review

Site Lat Long:	48.28618 -116.552678 (http://www.google.com/maps/place/48.28618,-116.552678)
Strategy Objective:	Notification and contaminant collection and recovery.
Implementation:	Sand Creek flow direction is to the south. Deploy collection boom and initiate contaminant recovery at Cluster South of Visitor's Center. Secure upstream end of boom River Right to tree. Secure downstream end of boom River Right to tree.
Site Safety Note:	Complete Job Safety Analysis.
Staging Area:	No staging area. Sandpoint City Beach boat launch is 1.6 miles away.
Field Notes:	• 4WD Access: NO • Seasonal Access Only: NO • Locked Gate: NO
Resources Targeted:	Wildlife Habitat, Threatened and Endangered Species, Recreational Use, Reservoir or Lake
Watercourse:	Sand Creek: gradient is low; substrate is gravel; approx. width is 275 ft.; approx. depth is 5 to 10 feet; slow moving

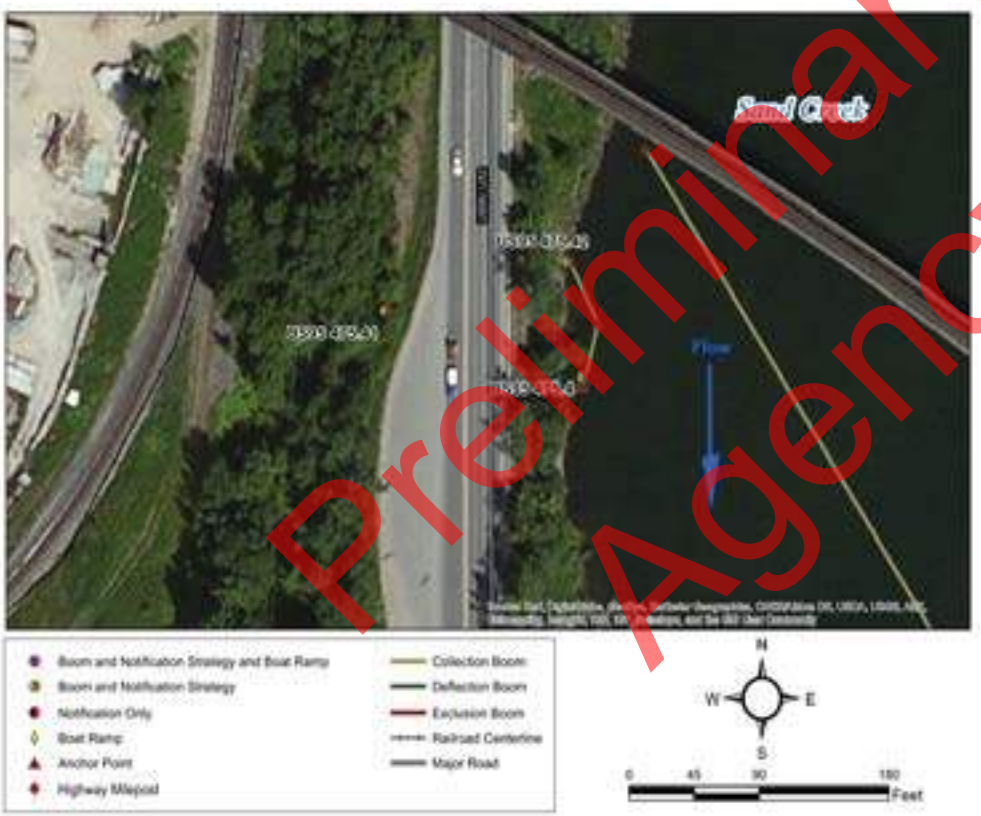

Suggested Equipment	
Quantity	Description
50 ft.	Curtain Boom Tow Bridles
As Appropriate	
75 ft.	Polypropylene Line
None	Steel Post Anchors
As Appropriate	Post pounder, shovels, knife, wood saw
None	In Water Anchors
As Appropriate	PFD work vests/rubber boots
As Appropriate	Throw bags, first aid kit
Jet boat/raft needed for strategy implementation? Y	

Suggested Personnel	
Quantity	Title (Function)
1	Booming Team Leader
1	Safety Representative
2 / 0	Haz-Mat Tech (Field Worker) / 1st Responder (Traffic Flagger)
1 / 1	Haz-Mat Tech (Boat Operator) / Haz-Mat Tech (Swiftwater)

Preliminary Draft for Agency Review

Nearest Cache: Sandpoint (1.4 miles)
Second Cache: Bonners (32.5 miles)

Nearest Address: 1125 5th Ave
Sandpoint ID 83864

Site-Specific Points of Contact

Site Access

Sandpoint, Idaho

1. Head north on N Fifth Ave toward Alder St - 0.7 mi

Preliminary Draft for Agency Review

14 inch culvert South of railroad trestle.

24 culvert South of railroad trestle, just below and downstream of 14 inch culvert.

Preliminary Draft for Agency Review

Site Lat Long:	48.286264 -116.553254 (http://www.google.com/maps/place/48.286264,-116.553254)
Strategy Objective:	Notification and contaminant collection and recovery.
Implementation:	Deploy collection boom and initiate contaminant recovery at Visitor's Center Culvert # 4. Vacuum truck access is good.
Site Safety Note:	Complete Job Safety Analysis.
Staging Area:	On site staging is small. No boat launch facilities. Sandpoint City Beach boat launch is 1.6 miles away.
Field Notes:	• 4WD Access: NO • Seasonal Access Only: NO • Locked Gate: NO
Resources Targeted:	Wildlife Habitat, Threatened and Endangered Species, Recreational Use, Reservoir or Lake
Watercourse:	

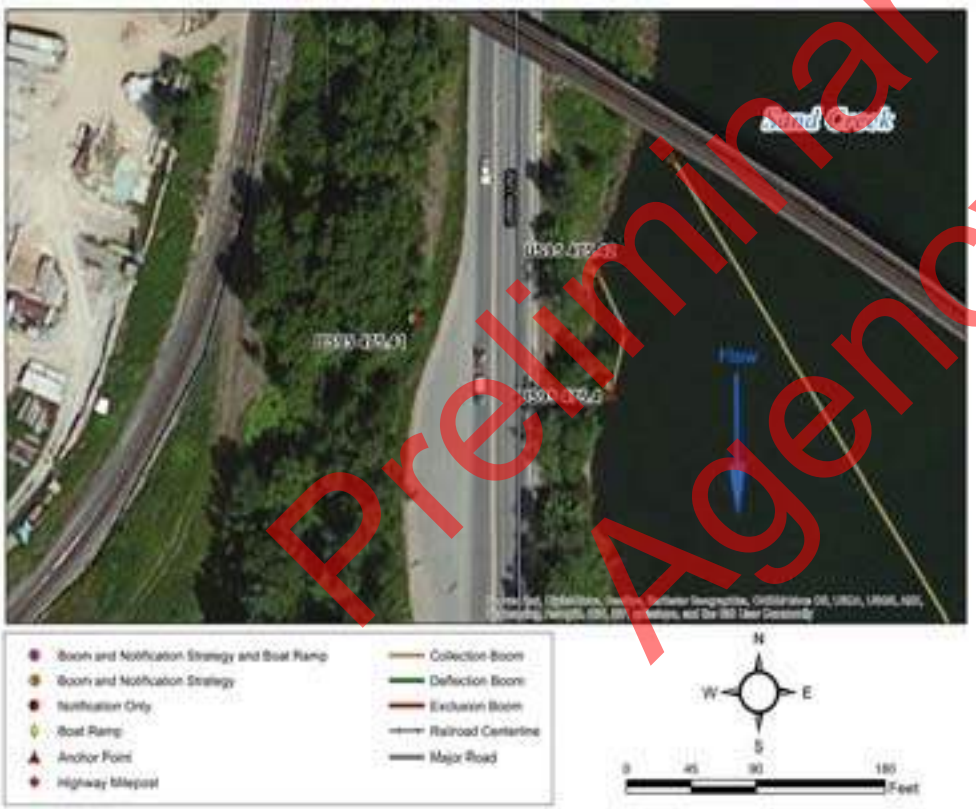

Suggested Equipment	
Quantity	Description
50 ft.	Curtain Boom Tow Bridles
As Appropriate	
75 ft.	Polypropylene Line
None	Steel Post Anchors
As Appropriate	Post pounder, shovels, knife, wood saw
None	In Water Anchors
As Appropriate	PFD work vests/rubber boots
As Appropriate	Throw bags, first aid kit
Jet boat/raft needed for strategy implementation? N	

Suggested Personnel	
Quantity	Title (Function)
1	Booming Team Leader
1	Safety Representative
2 / 1	Haz-Mat Tech (Field Worker) / 1st Responder (Traffic Flagger)
0 / 0	Haz-Mat Tech (Boat Operator) / Haz-Mat Tech (Swiftwater)

Preliminary Draft for Agency Review

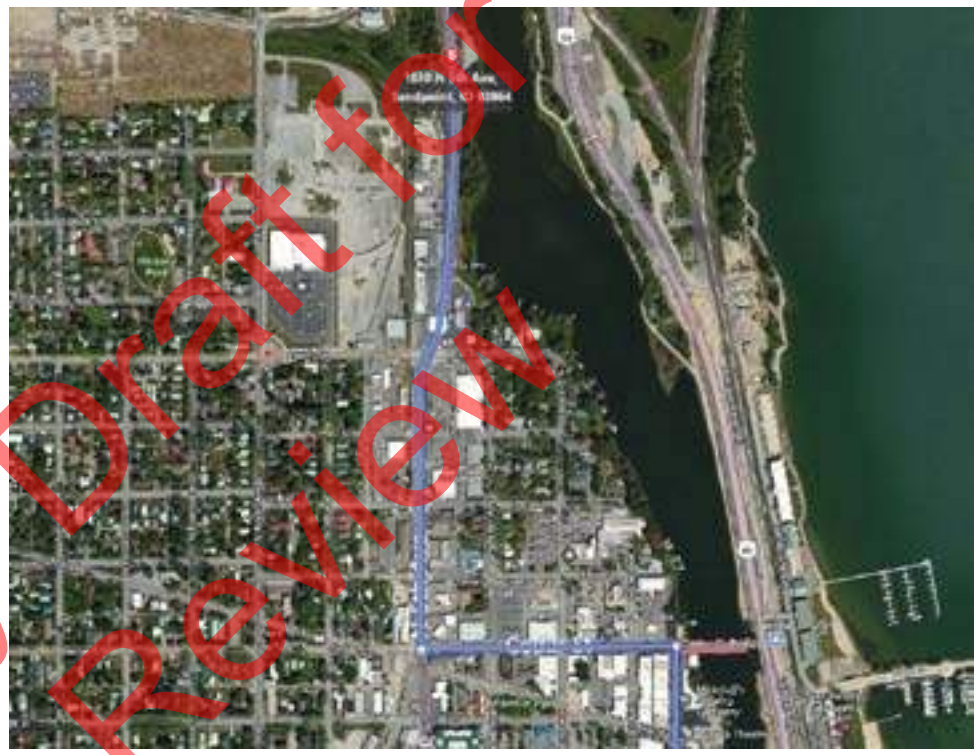

Nearest Cache: Sandpoint (1.4 miles)
Second Cache: Bonners (32.5 miles)

Nearest Address: 1125 5th Ave
Sandpoint ID 83864

Site-Specific Points of Contact

Site Access

Sandpoint, Idaho
1. Head north on N Fifth Ave toward Alder St - 0.5 mi

Preliminary Draft for Agency Review

From turn off facing north with sign for orientation, culvert is central in frame.

Facing east directly in front of culvert.

Preliminary Draft for Agency Review

Site Lat Long:	48.286379 -116.552747 (http://www.google.com/maps/place/48.286379,-116.552747)
Strategy Objective:	Notification and contaminant collection and recovery.
Implementation:	Sand Creek flow direction is to the south. Deploy collection boom and initiate contaminant recovery at Surface Water Outflow. Secure upstream end of boom River Right to tree. Secure downstream end of boom River Right to tree. Vacuum truck access is poor.
Site Safety Note:	Complete Job Safety Analysis.
Staging Area:	No staging area. Turn off across highway could be used as a good small to medium staging area. No boat launch facilities. Sandpoint City Beach boat launch is 1.6 miles away.
Field Notes:	• 4WD Access: NO • Seasonal Access Only: NO • Locked Gate: NO
Resources Targeted:	Wildlife Habitat, Threatened and Endangered Species, Recreational Use, Reservoir or Lake
Watercourse:	Sand Creek: gradient is low; substrate is gravel; approx. depth is 5 to 10 feet; slow moving

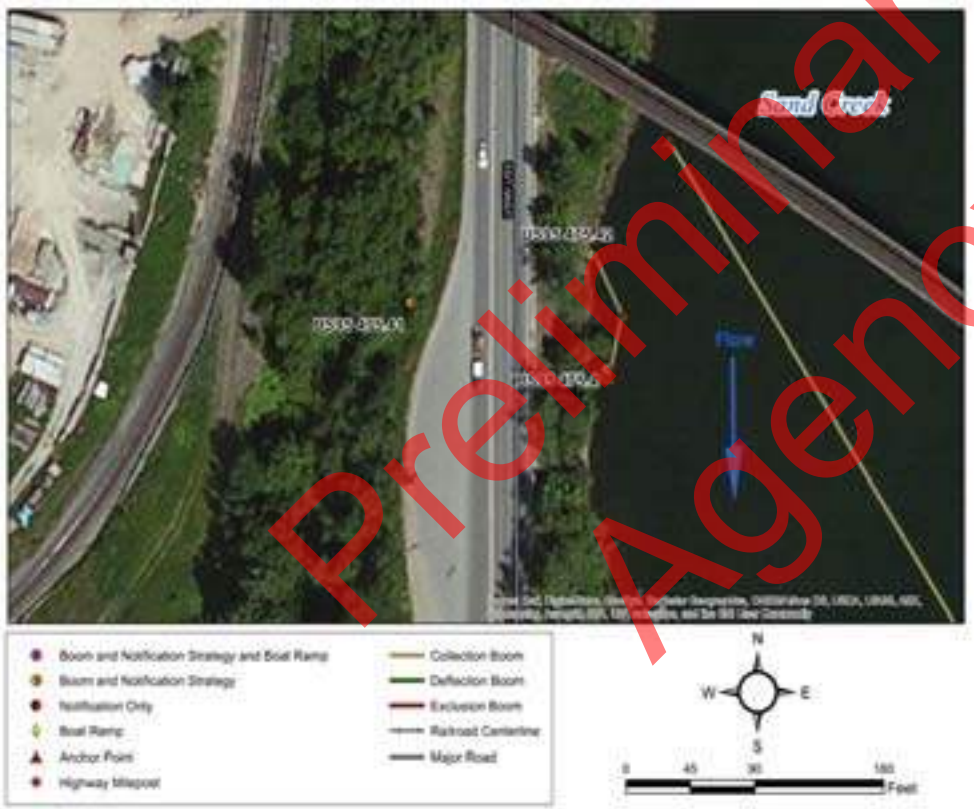

Suggested Equipment	
Quantity	Description
50 ft.	Curtain Boom Tow Bridles
As Appropriate	
75 ft.	Polypropylene Line
None	Steel Post Anchors
As Appropriate	Post pounder, shovels, knife, wood saw
None	In Water Anchors
As Appropriate	PFD work vests/rubber boots
As Appropriate	Throw bags, first aid kit
Jet boat/raft needed for strategy implementation?	Y

Suggested Personnel	
Quantity	Title (Function)
1	Booming Team Leader
1	Safety Representative
2 / 1	Haz-Mat Tech (Field Worker) / 1st Responder (Traffic Flagger)
1 / 1	Haz-Mat Tech (Boat Operator) / Haz-Mat Tech (Swiftwater)

Preliminary Draft for Agency Review

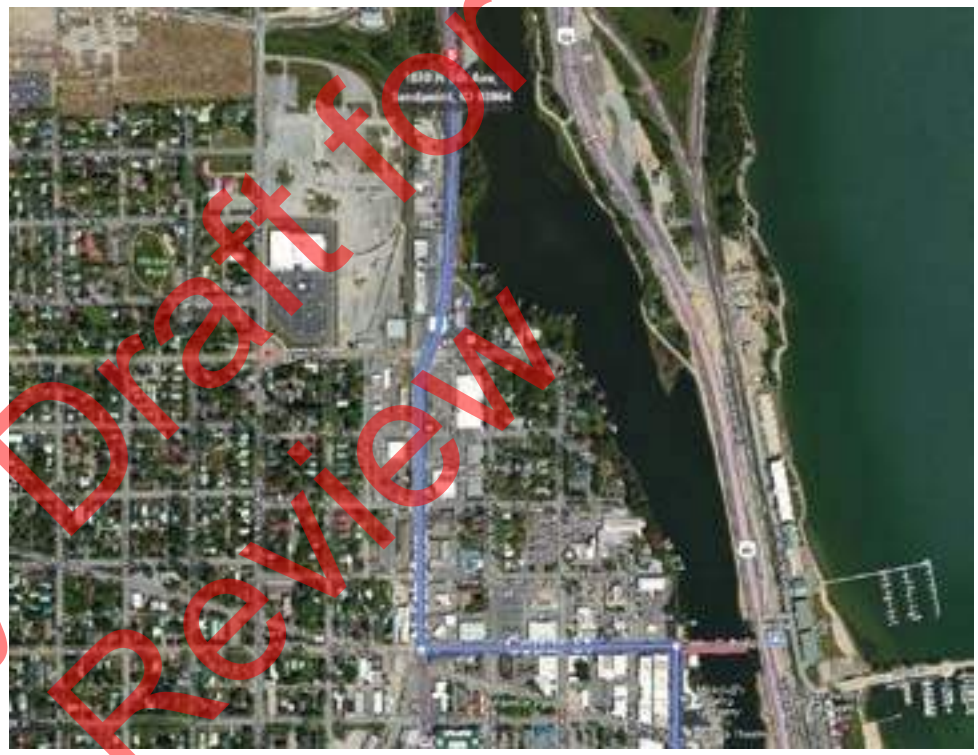

Nearest Cache: Sandpoint (1.4 miles)
Second Cache: Bonners (32.5 miles)

Nearest Address: 1125 5th Ave
Sandpoint ID 83864

Site-Specific Points of Contact

Site Access

Sandpoint, Idaho
1. Head north on N Fifth Ave toward Alder St - 0.5 mi
1307 North Fifth Avenue, Sandpoint, Idaho

Preliminary Draft for Agency Review

Site Lat Long:	48.287579 -116.552849 (http://www.google.com/maps/place/48.287579,-116.552849)
Strategy Objective:	Notification and contaminant collection and recovery.
Implementation:	Sand Creek flow direction is to the south. Deploy collection boom and initiate contaminant recovery at Surface Water Outflow. Secure upstream end of boom River Right to tree. Secure downstream end of boom River Right to tree. Vacuum truck access is poor.
Site Safety Note:	Complete Job Safety Analysis.
Staging Area:	No staging area. Shoulder of highway on inside turn. No boat launch facilities.Sandpoint City boat launch is 1.7 miles away.
Field Notes:	• 4WD Access: NO • Seasonal Access Only: NO • Locked Gate: NO
Resources Targeted:	Wildlife Habitat, Threatened and Endangered Species, Recreational Use, Reservoir or Lake
Watercourse:	Sand Creek: gradient is low; substrate is gravel; approx. width is 615 ft.; approx. depth is 5 to 10 feet; slow moving

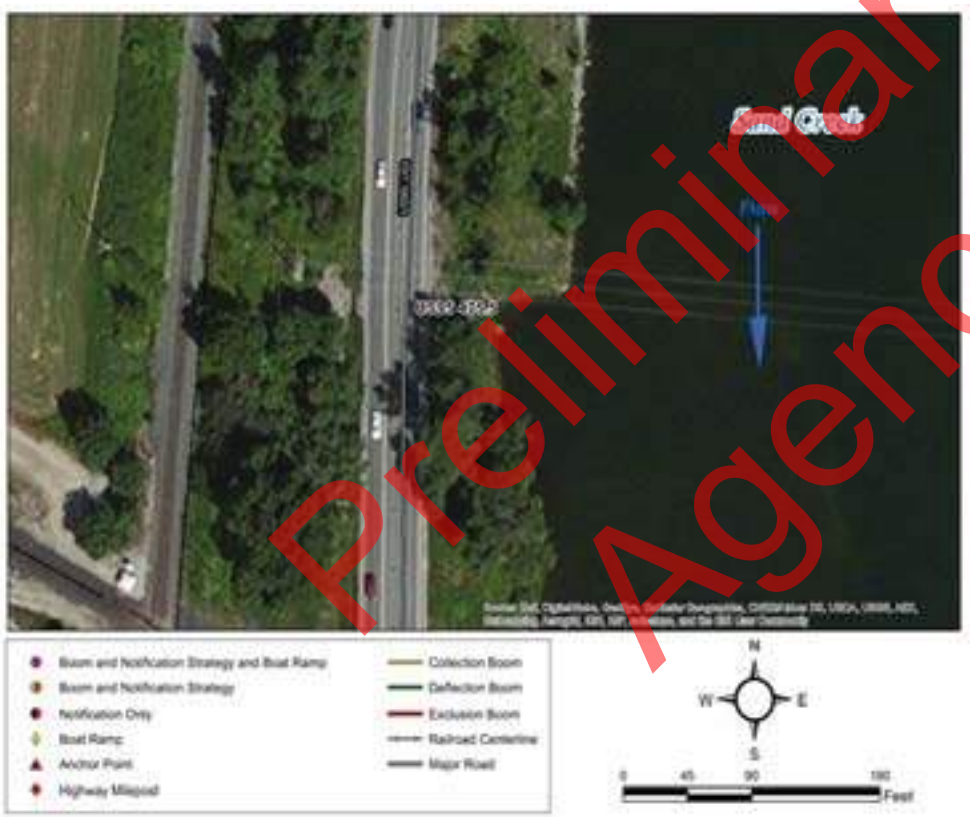

Suggested Equipment	
Quantity	Description
50 ft.	Curtain Boom Tow Bridles
As Appropriate	
75 ft.	Polypropylene Line
None	Steel Post Anchors
As Appropriate	Post pounder, shovels, knife, wood saw
None	In Water Anchors
As Appropriate	PFD work vests/rubber boots
As Appropriate	Throw bags, first aid kit
Jet boat/raft needed for strategy implementation? Y	

Suggested Personnel	
Quantity	Title (Function)
1	Booming Team Leader
1	Safety Representative
2 / 1	Haz-Mat Tech (Field Worker) / 1st Responder (Traffic Flagger)
1 / 1	Haz-Mat Tech (Boat Operator) / Haz-Mat Tech (Swiftwater)

Preliminary Draft for Agency Review

Nearest Cache: Sandpoint (1.5 miles)
Second Cache: Bonners (32.4 miles)

Nearest Address: 1500 N. Fifth Ave
Ponderay ID 83852

Site-Specific Points of Contact

Site Access

Sandpoint, Idaho

1. Head north on N Fifth Ave toward Alder St - 0.5 mi

Preliminary Draft for Agency Review

Picture taken from culvert facing upstream, rail link bridge in background for orientation.

Picture of culvert facing downriver.

Preliminary Draft for Agency Review

Site Lat Long:	48.28779 -116.557571 (http://www.google.com/maps/place/48.28779,-116.557571)
Strategy Objective:	Notification and contaminant collection and recovery.
Implementation:	Deploy collection boom and initiate contaminant recovey at West Boyer Rd crossing, corner of N Boyer Ave and Baldy Mt Rd. Vacuum truck access is good.
Site Safety Note:	Complete Job Safety Analysis.
Staging Area:	On site staging is medium. Medium sized parking area adjacent to West Boyer railroad crossing. No boat launch facilities. Sandpoint City Beach boat launch is 1.9 miles away.
Field Notes:	• 4WD Access: NO • Seasonal Access Only: NO • Locked Gate: NO
Resources Targeted:	Wildlife Habitat, Threatened and Endangered Species, Recreational Use, Reservoir or Lake
Watercourse:	

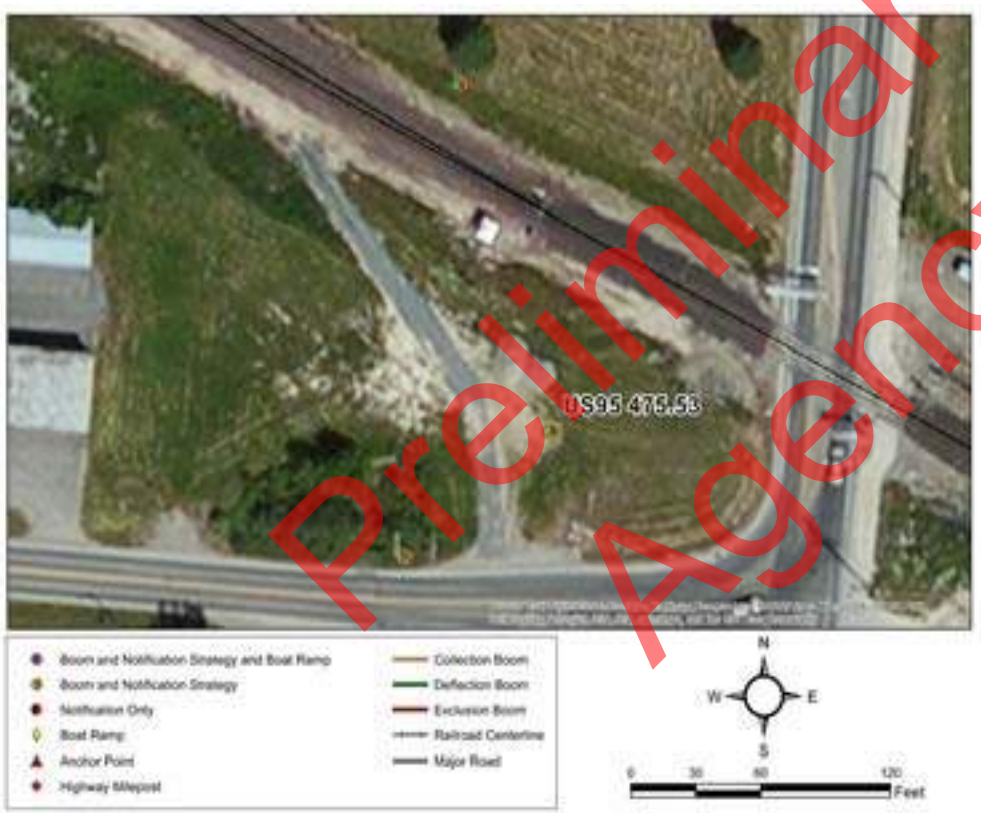

Suggested Equipment	
Quantity	Description
None	Curtain Boom Tow Bridles
As Appropriate	
	Polypropylene Line
12	Steel Post Anchors
As Appropriate	Post pounder, shovels, knife, wood saw
None	In Water Anchors
As Appropriate	PFD work vests/rubber boots
As Appropriate	Throw bags, first aid kit
Jet boat/raft needed for strategy implementation? N	

Suggested Personnel	
Quantity	Title (Function)
1	Booming Team Leader
1	Safety Representative
2 / 0	Haz-Mat Tech (Field Worker) / 1st Responder (Traffic Flagger)
0 / 0	Haz-Mat Tech (Boat Operator) / Haz-Mat Tech (Swiftwater)

Preliminary Draft for Agency Review

Nearest Cache: Sandpoint (1.4 miles)
Second Cache: Bonners (32.4 miles)

Nearest Address: 600-902 Baldy Mountain RD
Sandpoint ID 83864

Site-Specific Points of Contact

Site Access

Sandpoint, Idaho
1.Head north on N Fifth Ave toward Alder St- 0.3 mi
2. Turn left onto Larch St- 0.2 mi
3. At the traffic circle, take the 1st exit onto N Boyer Ave- 0.5 mi
4. Turn left onto Baldy Mountain Rd, destination will be on the right- 128 ft

Preliminary Draft for Agency Review

This page intentionally blank

Preliminary Draft for Agency Review

Cardboard
Sector 4

Preliminary Draft for Agency Review

This page intentionally blank

Preliminary Draft for Agency Review

Sector & Map	Site ID & Highway Milepost	Railroad Milepost	Site Name	Accessible by boat at Low Water?	Nearest Boat Ramp or Staging Area
Sector 4A Northside- (Lakeshore)	US95 478.53	BNSF Kootenai 1399.09	Bronx Rd	No	US95 473.87
	US95 479.99	BNSF Kootenai 1399.67	Sand Creek Water Treatment Plant	No	none
	SR200 33.15	MRL4 114.92	Boyer Slough	No	none
	SR200 34.53	MRL4 113.5	Oden Water Assn Water Intake	Yes	SR200 42.59
	SR200 34.98	MRL4 113.0	Culver Slough	Unlikely	US95 473.87
	SR200 36.39	MRL4 109.77	Pend Orielle State Wildlife Management Area	Unlikely	US95 473.87
	SR200 38.69	MRL4 109.93	Pack River Bridge	No	SR200 42.59
	SR200 41.28	MRL4 107.49	Sunnyside Water Intake	Yes	SR200 41.38
Sector 4B Northside- (Selle Valley)	US95 480.44	BNSF Kootenai 1397.09	West Selle Rd	No	uncertain
	US95 484.17	BNSF Kootenai 1393.33	East Colburn	No	US95 473.87
	US95 485.77	BNSF Kootenai 1391.75	Lower Pack River	No	none
	SR200 37.78	MRL4 111.05	Rapid Lightning Road Bridge	No	none

Preliminary Draft for Agency Review

USCG001833/27

Sector 4A Northside Fire District

Lakeshore Area

Go Back to Regional Map

Preliminary Draft for Agency Review

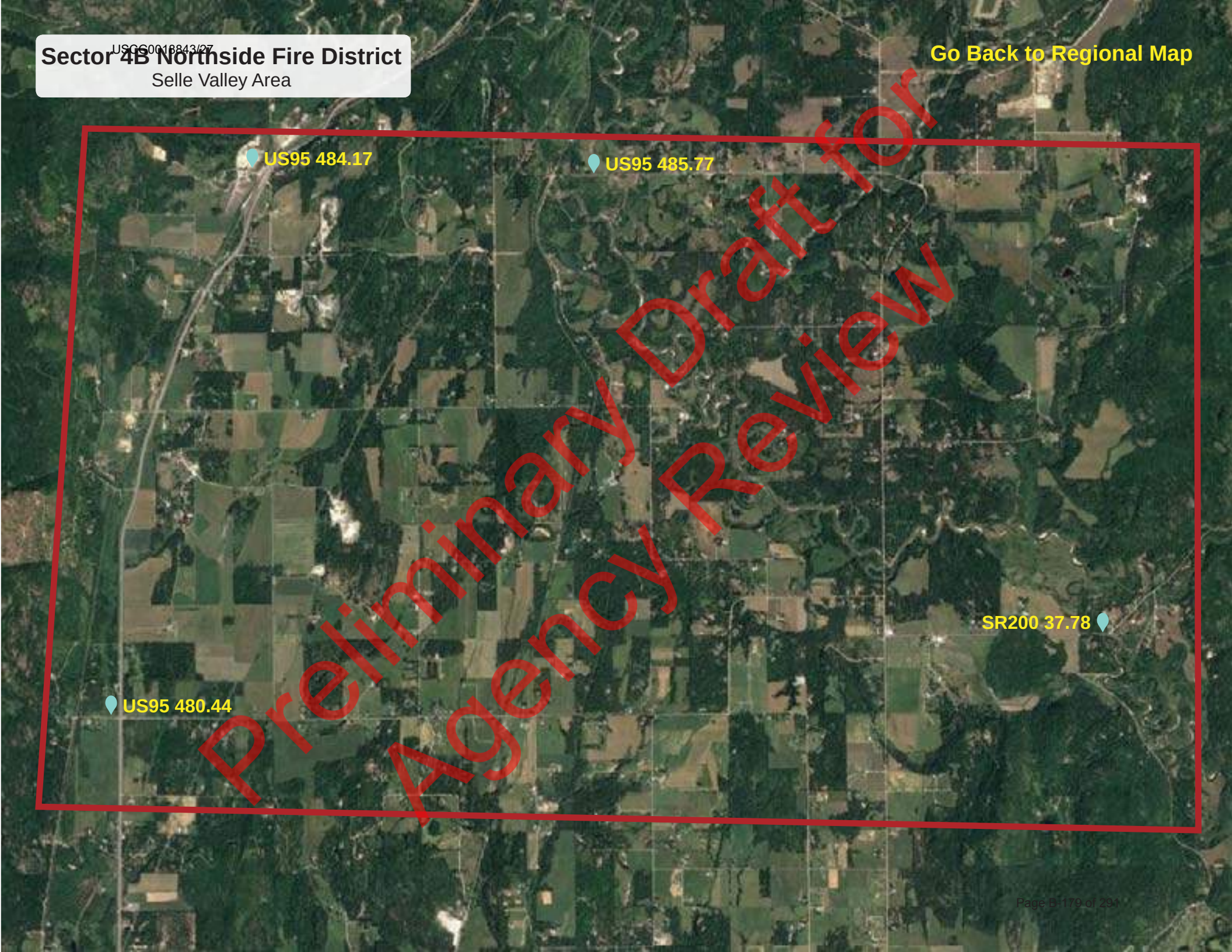
USGS0018843/27
Sector 4B Northside Fire District
Selle Valley Area
Go Back to Regional Map
US95 484.17
US95 485.77
SR200 37.78
US95 480.44
Preliminary Draft for Agency Review

Site Lat Long:	48.09251 -116.096934 (http://www.google.com/maps/place/48.328199,-116.552754)
Strategy Objective:	Notification and contaminant collection and recovery.
Implementation:	Sand Creek flow direction is to the south. Deploy collection boom and initiate contaminant recovery at Bronx Rd recovery location on Sand Creek. Secure upstream end of boom River Right to tree. Secure downstream end of boom River Left to steel post. Vacuum truck access is good.
Site Safety Note:	Complete Job Safety Analysis. Dense Vegetation River right and narrow county road.
Staging Area:	No staging area. Small to no staging area. Very narrow bridge. Sandpoint City Beach boat launch is 5.0 miles away. Sandpoint Ciboat launch Beach BL is 5.0 miles away.
Field Notes:	• Private property • 4WD Access: **NO** • Seasonal Access Only: **NO** • Locked Gate: **NO**
Resources Targeted:	Recreation, Reservoir, Threatened and Endangered Species.
Watercourse:	Sand Creek: gradient is low; substrate is sand; approx. width is 24 ft.; approx. depth is 1 to 5 feet; fast moving.

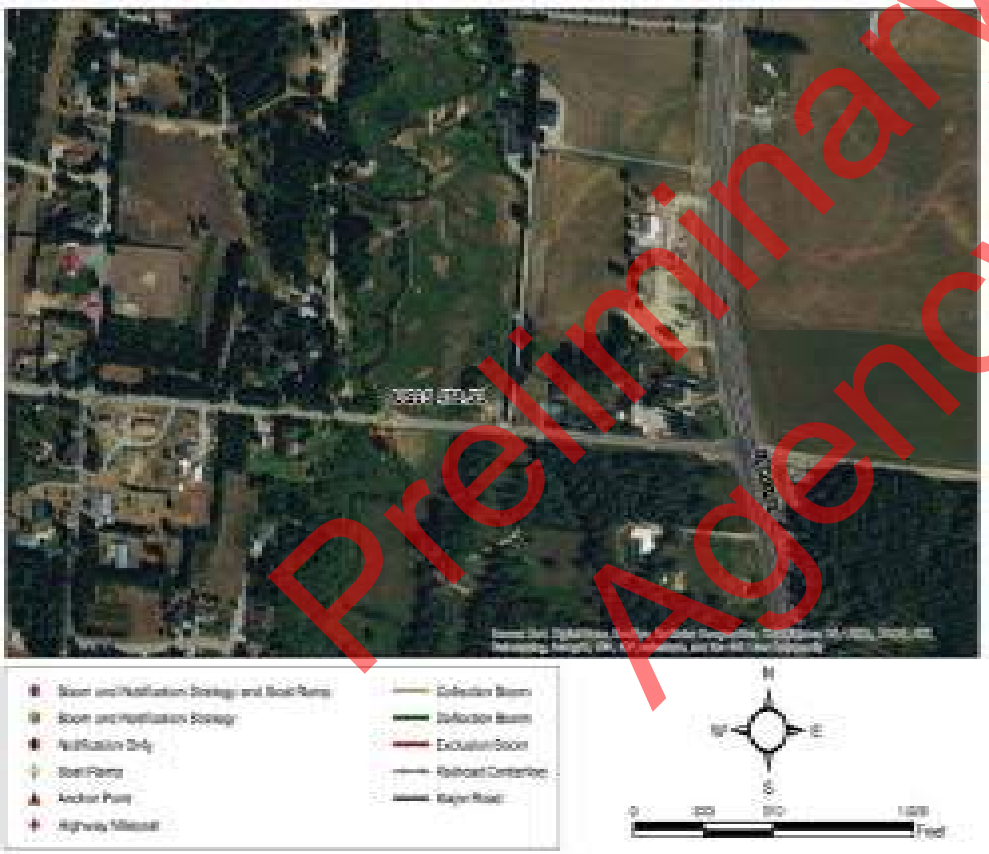

Suggested Equipment	
Quantity	Description
50 ft.	Curtain Boom Tow Bridles
As Appropriate	Portable Skimmer; Vacuum Truck; Absorbent Boom
75 ft.	Polypropylene Line
3	Steel Post Anchors
As Appropriate	Post pounder, shovels, knife, wood saw
None	In Water Anchors
As Appropriate	PFD work vests/rubber boots
As Appropriate	Throw bags, first aid kit
Jet boat/raft needed for strategy implementation? N	

Suggested Personnel	
Quantity	Title (Function)
1	Booming Team Leader
1	Safety Representative
2 / 2	Haz-Mat Tech (Field Worker) / 1st Responder (Traffic Flagger)
/	Haz-Mat Tech (Boat Operator) / Haz-Mat Tech (Swiftwater)

Preliminary Draft for Agency Review

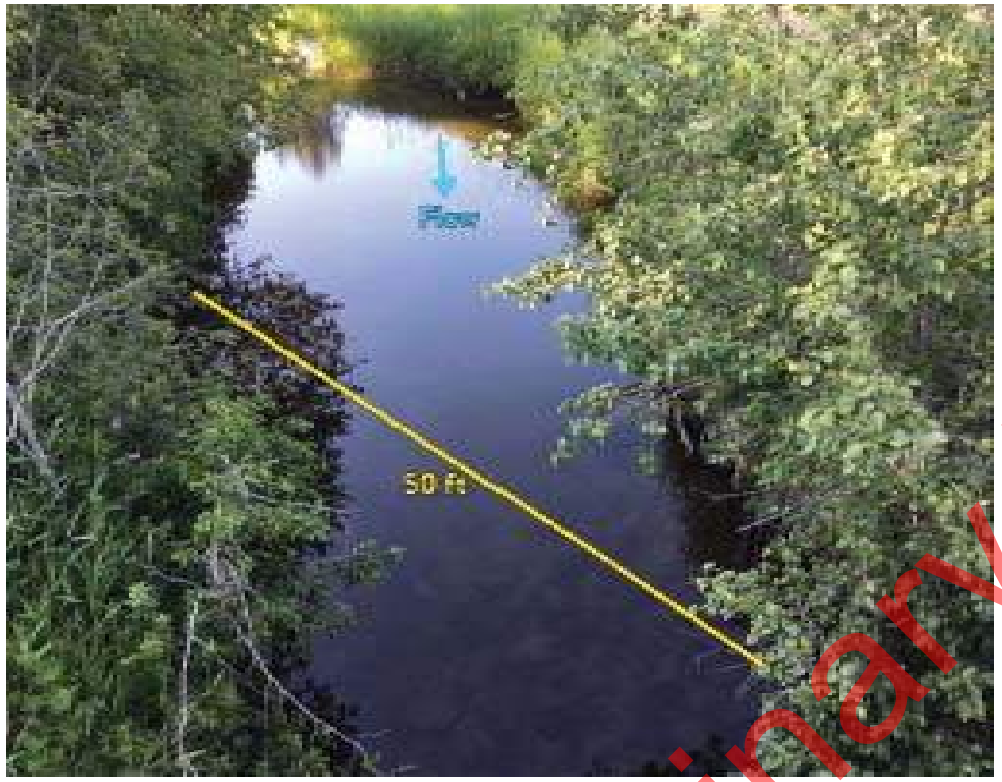

Nearest Cache: Sandpoint (4.6 miles)
Second Cache: Bonners (29.5 mile)

Nearest Address: 334 W Bronx Rd.
Sandpoint ID 83864

Site-Specific Points of Contact

Site Access

Sandpoint, Idaho

1. Head north on US-2 E/N Fifth Ave toward Alder St - 1.0 mi
2. Continue onto ID-200 - 361 ft
3. Take the ramp onto US-95 N 2.9 mi
4. Turn left onto W Bronx Rd - 0.2 mi

Preliminary Draft for Agency Review

Bridge looking east.

Sand creek looking north.

Preliminary Draft for Agency Review

Site Lat Long:	48.321576 -116.571611 (http://www.google.com/maps/place/48.321576,-116.571611)
Strategy Objective:	Notification Only.
Implementation:	Notify Sand Creek Water Treatment Plant - contact David Pafundi at 208-263-3440 to shut off water intake on Sand Creek.
Site Safety Note:	Complete Job Safety Analysis.
Staging Area:	No staging area. Bottle Bay Bridge boat launch is 7.8 miles away.
Field Notes:	• 4WD Access: **NO** • Seasonal Access Only: **NO** • Locked Gate: **NO**
Resources Targeted:	Wildlife Habitat, Threatened and Endangered Species, Recreational Use, Reservoir or Lake.
Watercourse:	

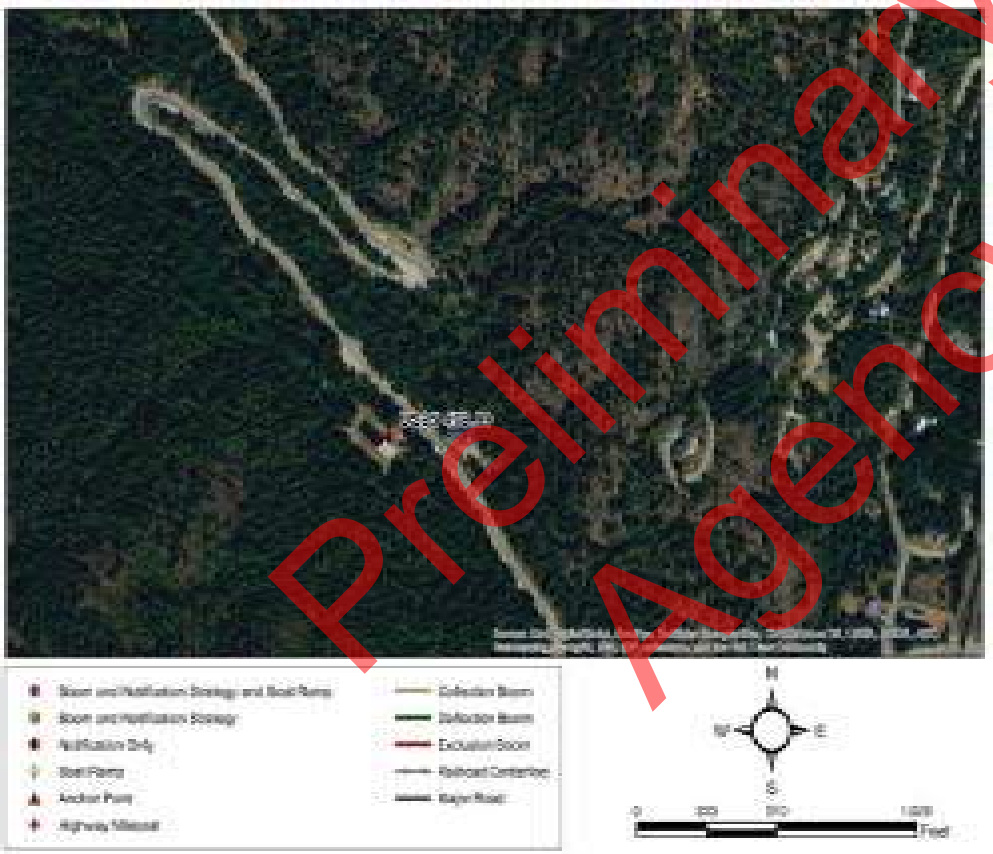

Suggested Equipment	
Quantity	Description
None	Curtain Boom Tow Bridles
As Appropriate	
	Polypropylene Line
None	Steel Post Anchors
As Appropriate	Post pounder, shovels, knife, wood saw
None	In Water Anchors
As Appropriate	PFD work vests/rubber boots
As Appropriate	Throw bags, first aid kit
Jet boat/raft needed for strategy implementation?	N

Suggested Personnel	
Quantity	Title (Function)
	Booming Team Leader
	Safety Supervisor
/ None	Haz-Mat Tech (Field Worker) / 1st Responder (Traffic Flagger)
/	Haz-Mat Tech (Boat Operator) / Haz-Mat Tech (Swiftwater)

Preliminary Draft for Agency Review

Nearest Cache: Sandpoint (4.1 miles)
Second Cache: Bonners (31.1 mile)

Nearest Address: 785 Rd Schweitzer Mtn.
Sandpoint ID 83864

Site-Specific Points of Contact

David Pafundi - (208) 263-3440

Ryan Luttman - (208) 263-3407

Site Access

Sandpoint, Idaho

1. Head north on N Fifth Ave toward Alder St - 0.3 mi
2. Turn left onto Larch St - 0.2 mi
3. At the traffic circle, take the 1st exit onto N Boyer Ave - 2.1 mi
4. Turn left onto Schweitzer Mountain Rd - 1.2 mi
5. Turn right onto Boyer Rd. - 0.8 mi
6. Turn left onto Schweitzer Mountain Rd - 1.2 mi

Preliminary Draft for Agency Review

Site Lat Long:	48.309266 -11.491667 (http://www.google.com/maps/place/48.309266,-116.491667)
Strategy Objective:	Notification and contaminant collection and recovery.
Implementation:	River flow direction is to the south. Deploy collection boom and initiate contaminant recovery at Boyer Slough. Secure upstream end of boom River Right to fixed anchor. Secure downstream end of boom River Left to fixed anchor. Vacuum truck access is good. Secure upstream end of boom River Right to steel post. Secure downstream end of boom River Left to steel post.
Site Safety Note:	Complete Job Safety Analysis.
Staging Area:	On site staging is small. Parking for vehicles and equipment on Whiskey Jack Rd near bridge over the slough. No boat ramp. Narrow shoulder. No boat launch facilities. Bottle Bay Bridge boat launch is 7.9 miles away.
Field Notes:	• Use wooden pillars in slough to anchor boom at bridge. Second boom at mouth of slough anchored with steel posts to create containment or exclusion. • 4WD Access: **NO** • Seasonal Access Only: **NO** • Locked Gate: **NO**
Resources Targeted:	Boyer slough, fish habitat, wetlands habitat, and community recreational use
Watercourse:	Gradient is low; substrate is mud; approx. width is 40 ft.; approx. depth is 5 to 10 feet; braided channels; shoals; slow moving.

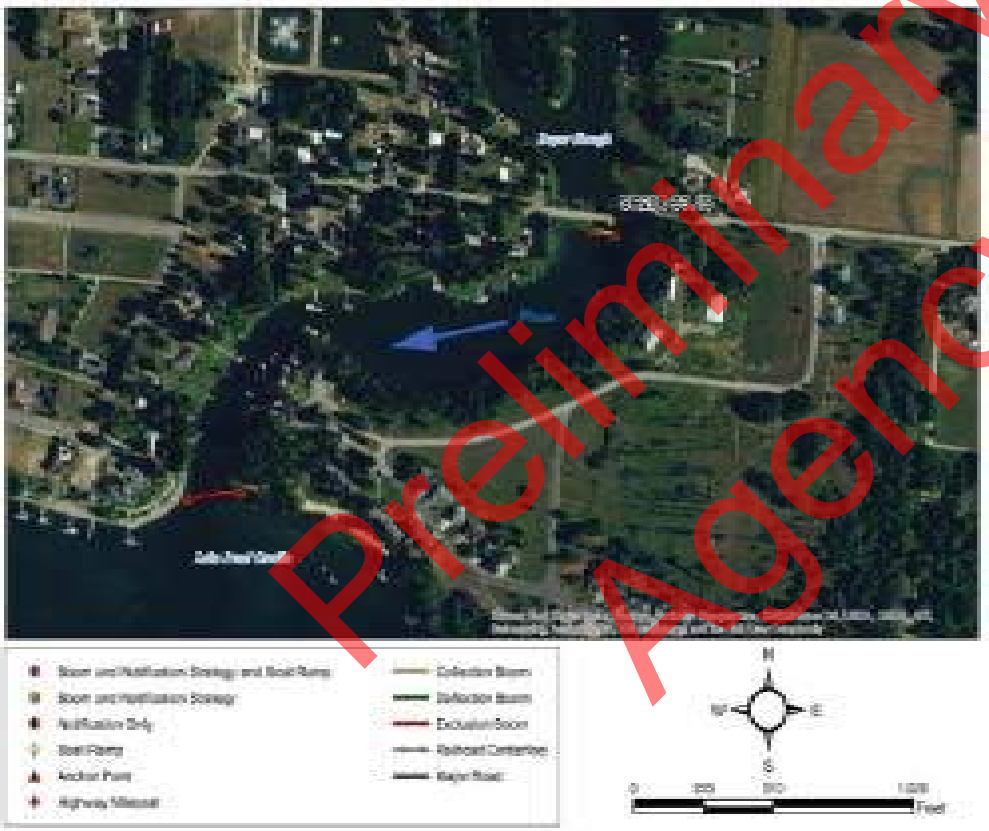

Suggested Equipment	
Quantity	Description
200 ft.	Curtain Boom Tow Bridles
As Appropriate	Portable Skimmer; Vacuum Truck
300 ft.	Polypropylene Line
6	Steel Post Anchors
As Appropriate	Post pounder, shovels, knife, wood saw
None	In Water Anchors
As Appropriate	PFD work vests/rubber boots
As Appropriate	Throw bags, first aid kit
Jet boat/raft needed for strategy implementation?	Y

Suggested Personnel	
Quantity	Title (Function)
1	Booming Team Leader
1	Safety Representative
2 / 2	Haz-Mat Tech (Field Worker) / 1st Responder (Traffic Flagger)
/	Haz-Mat Tech (Boat Operator) / Haz-Mat Tech (Swiftwater)

Preliminary Draft for Agency Review

Nearest Cache: Sandpoint (5.2 miles)
Second Cache: Cabinet Gorge Dam (31.5 miles)

Nearest Address: 467-735 Whiskey Jack Rd
Sandpoint ID 83864

Site-Specific Points of Contact

Site Access

Sandpoint, Idaho

1. Head north on US-2 E/N Fifth Ave toward Alder St - 1.0 mi
2. Continue onto ID-200 - 2.7 mi
3. Turn right onto Kootenai Bay Rd - 387 ft
4. Turn left onto Whiskey Jack Rd - 0.8 mi

Preliminary Draft for Agency Review

Downstream view of slough from the east side of bridge.

East view of bridge and small parking area.

Preliminary Draft for Agency Review

Site Lat Long:	48.298221 -116.85555 (http://www.google.com/maps/place/48.298221,-116.472555)
Strategy Objective:	Notification and exclusion. Prevent contaminant from impacting sensitive area at Oden Water Assn Water Intake.
Implementation:	Secure upstream end of boom to North Shoreline to steel post. Secure downstream end of boom to South Shoreline to steel post. Vacuum truck access is poor. Notify Oden Water Association.
Site Safety Note:	Complete Job Safety Analysis.
Staging Area:	On site staging is none. Private community. Access from boat only. Trestle Creek boat launch is 9.4 miles away.
Field Notes:	• No road access • 4WD Access: **NO** • Seasonal Access Only: **NO** • Locked Gate: **NO**
Resources Targeted:	Community water intake
Watercourse:	Lake Pend Oreille; approx. depth is 10 to 20 feet

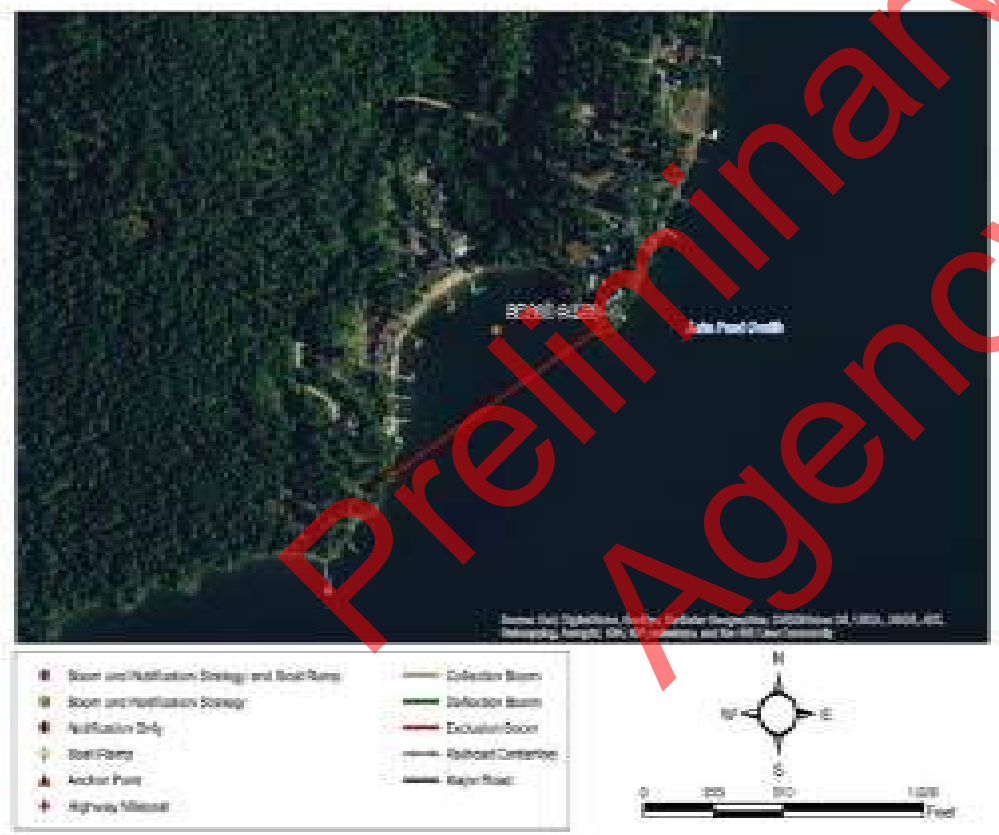

Suggested Equipment	
Quantity	Description
1000 ft.	Curtain Boom Tow Bridles
As Appropriate	
1250 ft.	Polypropylene Line
6	Steel Post Anchors
As Appropriate	Post pounder, shovels, knife, wood saw
None	In Water Anchors
As Appropriate	PFD work vests/rubber boots
As Appropriate	Throw bags, first aid kit
Jet boat/raft needed for strategy implementation?	Y

Suggested Personnel	
Quantity	Title (Function)
1	Booming Team Leader
1	Safety Representative
2 / 0	Haz-Mat Tech (Field Worker) / 1st Responder (Traffic Flagger)
1 / 1	Haz-Mat Tech (Boat Operator) / Haz-Mat Tech (Swiftwater)

Preliminary Draft for Agency Review

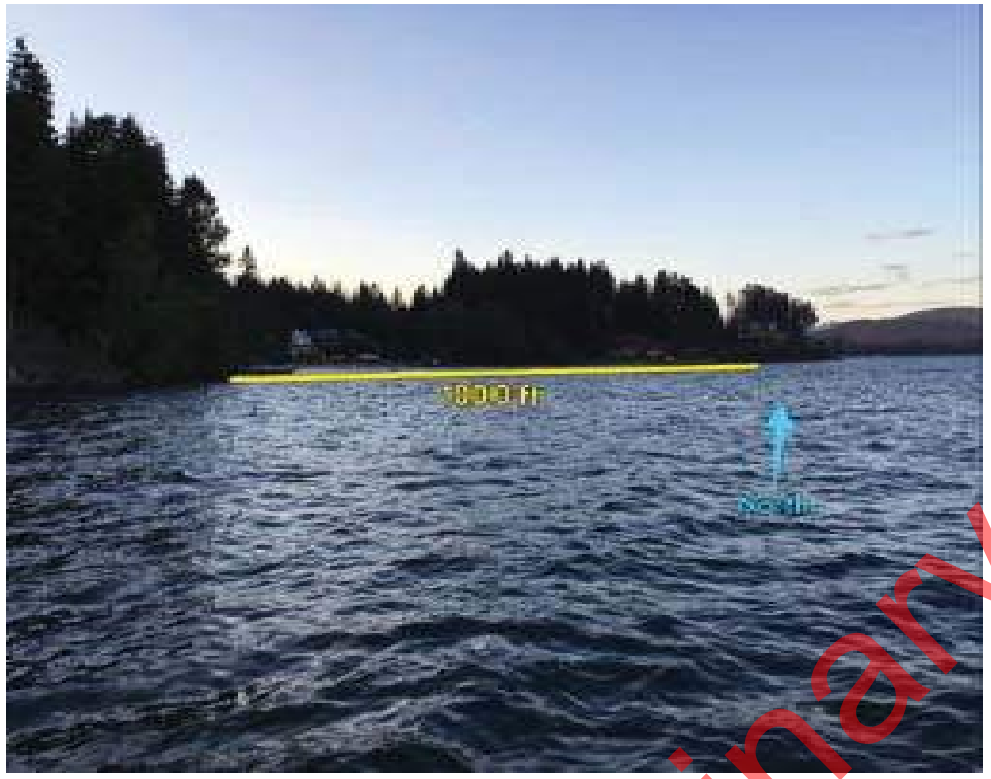

Nearest Cache: Sandpoint (7.1 miles)
Second Cache: Cabinet Gorge Dam (28.2 miles)

Nearest Address: 55 Ideal Dr.
Sandpoint ID 83864

Site-Specific Points of Contact

Carla Poelstra, Intake Manager (208) 255-4001

Site Access - use Sandpoint City Beach boat launch, directions below

Sandpoint, Idaho

1. Head south on N Fifth Ave toward Cedar St - 171 ft
2. Turn left onto Pine St 0.3 mi
3. Pine St turns left and becomes N First Ave 246 ft
4. Turn right onto Bridge St 0.2 mi
5. Turn right

Preliminary Draft for Agency Review

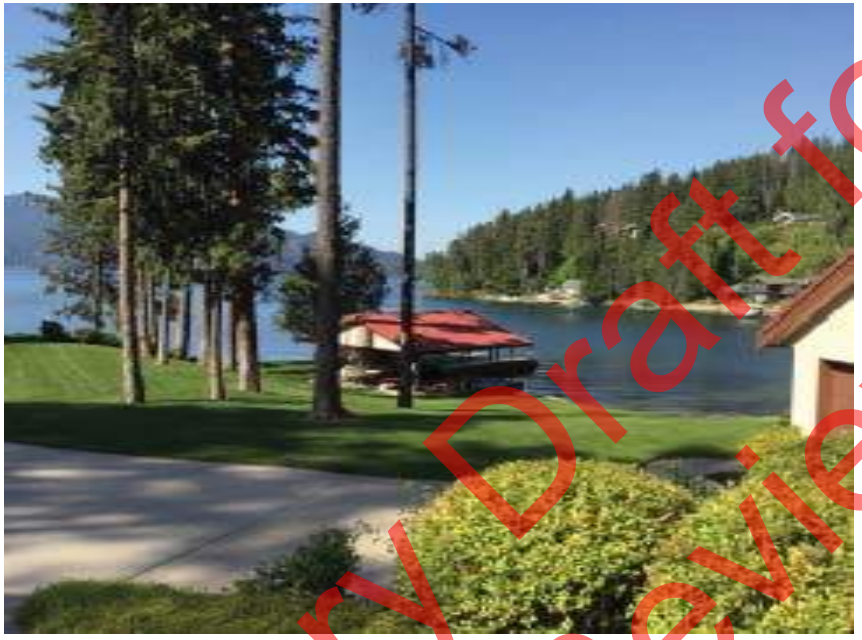

View of water intake area from private residence east of the bay.

View of the Oden water intake cover, looking northwest.

Preliminary Draft for Agency Review

Site Lat Long:	48.316028 -116.455518 (http://www.google.com/maps/place/48.316028,-116.455518)
Strategy Objective:	Notification and exclusion. Prevent contaminant from impacting sensitive area at Culver Slough.
Implementation:	Secure upstream end of boom River Right to steel post. Secure downstream end of boom River Left to steel post. Vacuum truck access is poor.
Site Safety Note:	Complete Job Safety Analysis.
Staging Area:	No staging area. No boat launch facilities. Use Sandpoint City Beach boat launch. Trestle Creek boat launch is 7.6 miles away.
Field Notes:	• 4WD Access: **NO** • Seasonal Access Only: **NO** • Locked Gate: **NO**
Resources Targeted:	Culver Slough, fish habitat, wetlands, recreation.
Watercourse:	Lake Pend Oreille; substrate is mud; approx. depth is 5 to 10 feet; slow moving; shoals.

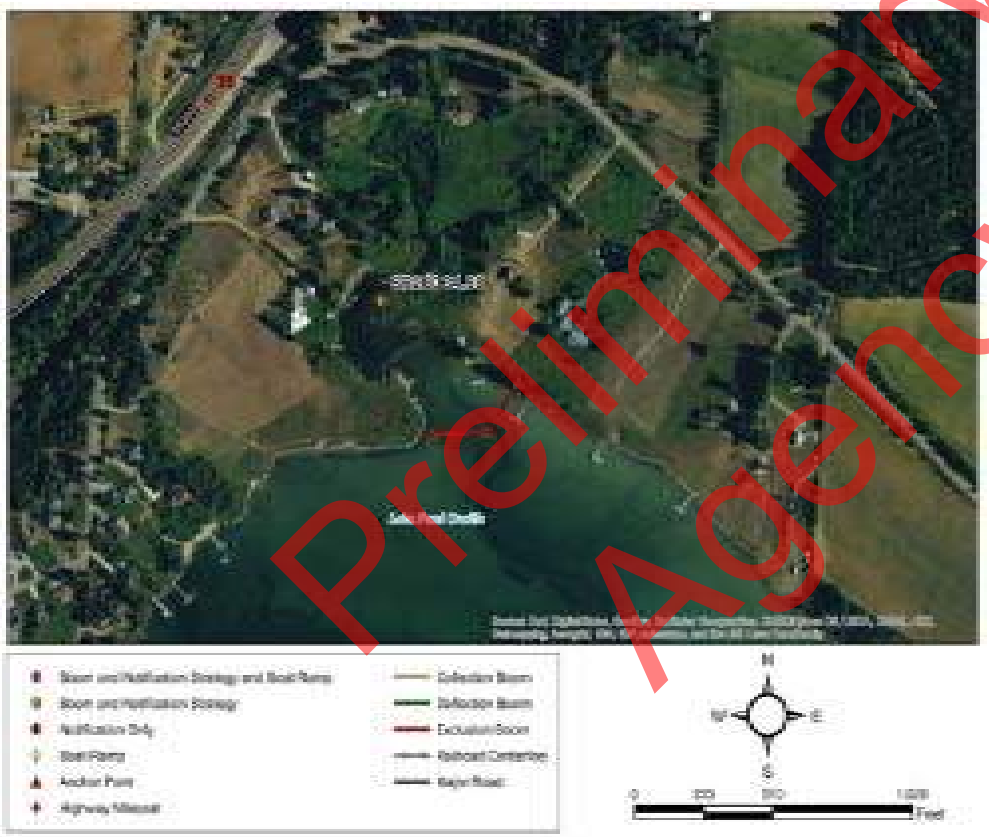

Suggested Equipment	
Quantity	Description
450 ft.	Curtain Boom Tow Bridles
As Appropriate	
525 ft.	Polypropylene Line
6	Steel Post Anchors
As Appropriate	Post pounder, shovels, knife, wood saw
1	In Water Anchors
As Appropriate	PFD work vests/rubber boots
As Appropriate	Throw bags, first aid kit
Jet boat/raft needed for strategy implementation?	Y

Suggested Personnel	
Quantity	Title (Function)
1	Booming Team Leader
1	Safety Representative
2 / 0	Haz-Mat Tech (Field Worker) / 1st Responder (Traffic Flagger)
1 / 1	Haz-Mat Tech (Boat Operator) / Haz-Mat Tech (Swiftwater)

Preliminary Draft for Agency Review

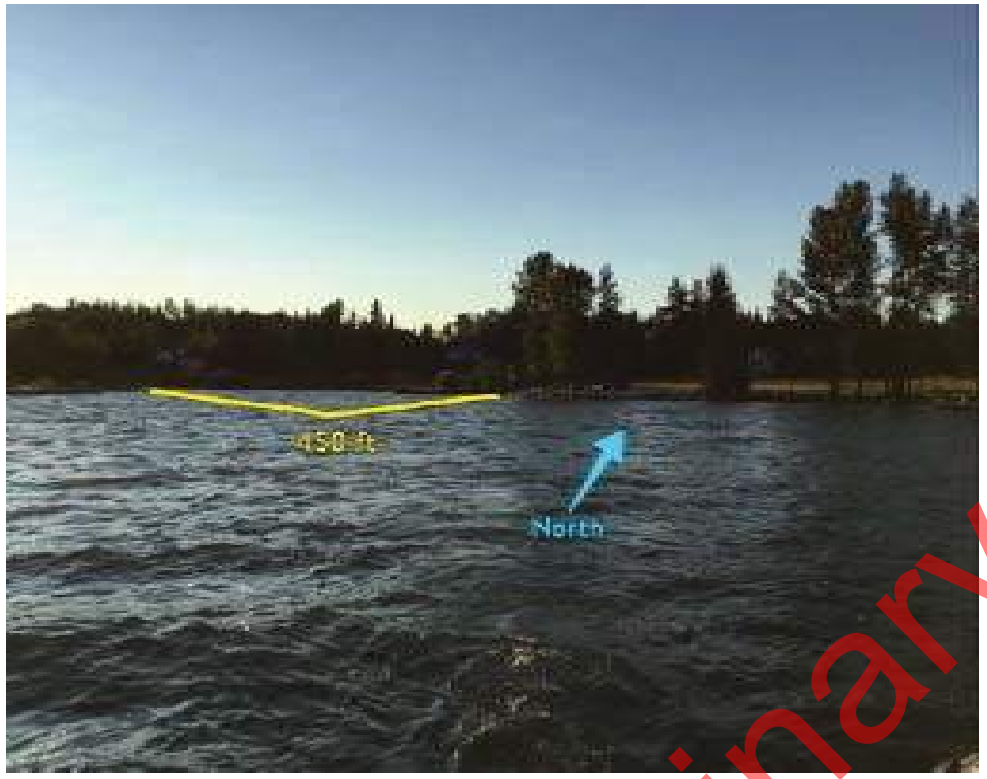

Nearest Cache: Sandpoint (7.1 miles)
Second Cache: Cabinet Gorge Dam (28.2 miles)

Nearest Address: 224 Sunnyside Rd.
Sandpoint ID 83864

Site-Specific Points of Contact

Site Access - use Sandpoint City Beach boat launch, directions below

Sandpoint, Idaho

1. Head south on N Fifth Ave toward Cedar St - 171 ft
2. Turn left onto Pine St 0.3 mi
3. Pine St turns left and becomes N First Ave 246 ft
4. Turn right onto Bridge St 0.2 mi
5. Turn right

Preliminary Draft for Agency Review

Culver slough seen from the Kaniksu Estates road.

Culver Slough from lake Pend Orellie looking northwest.

Preliminary Draft for Agency Review

Site Lat Long:	48.29857 -116.423699 (http://www.google.com/maps/place/48.29857,-116.423699)
Strategy Objective:	Notification and exclusion. Prevent contaminant from impacting sensitive area at Pend Orielle state wildlife management area upper.
Implementation:	Lake Pend Oreille flow direction is to the west. Secure upstream end of boom East Shoreline to tree. Secure downstream end of boom West Shoreline to tree.
Site Safety Note:	Complete Job Safety Analysis.
Staging Area:	No staging area. No boat launch facilities. Hawkin's Point boat launch is 3.6 miles away.
Field Notes:	• 4WD Access: **NO** • Seasonal Access Only: **NO** • Locked Gate: **NO**
Resources Targeted:	Wildlife management area
Watercourse:	Lake Pend Oreille: gradient is low; substrate is mud; approx. depth is over 20 feet.

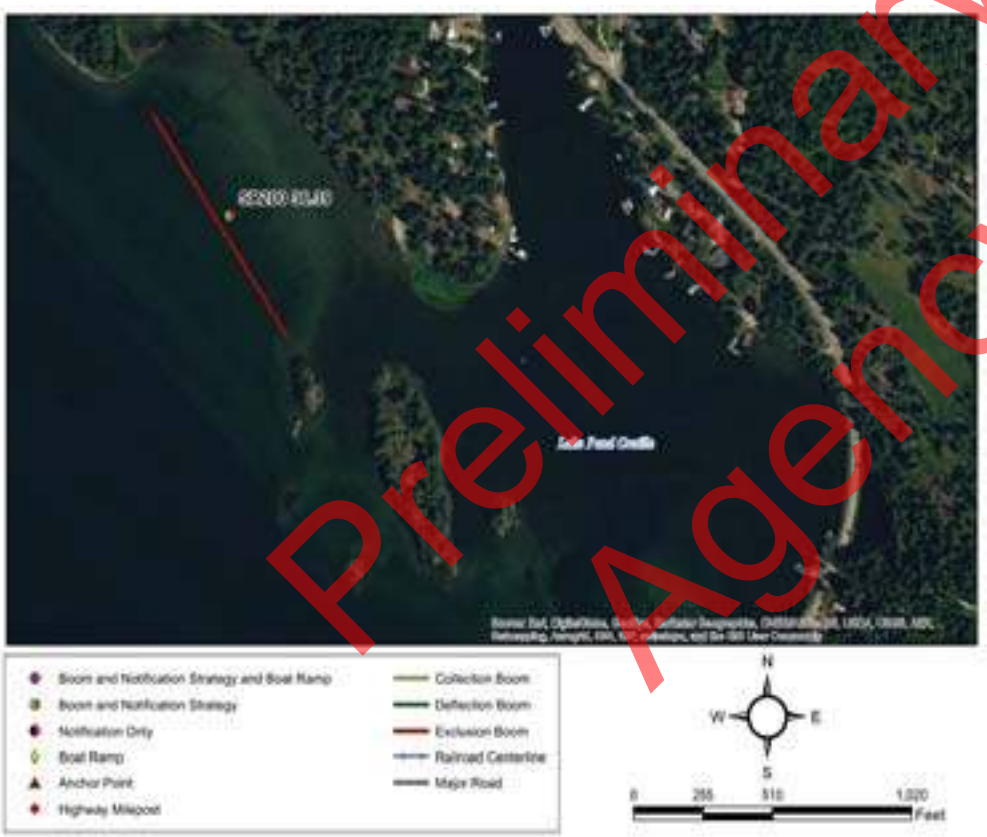

Suggested Equipment	
Quantity	Description
0 ft.	Curtain Boom Tow Bridles
As Appropriate	
	Polypropylene Line
None	Steel Post Anchors
As Appropriate	Post pounder, shovels, knife, wood saw
2	In Water Anchors
As Appropriate	PFD work vests/rubber boots
As Appropriate	Throw bags, first aid kit
Jet boat/raft needed for strategy implementation?	Y

Suggested Personnel	
Quantity	Title (Function)
1	Booming Team Leader
1	Safety Representative
4 / 0	Haz-Mat Tech (Field Worker) / 1st Responder (Traffic Flagger)
1 / 1	Haz-Mat Tech (Boat Operator) / Haz-Mat Tech (Swiftwater)

Preliminary Draft for Agency Review

Nearest Cache: Sandpoint (10.4 miles)
Second Cache: Cabinet Gorge Dam (29.2 mile)

Nearest Address: 2766-3426 Sunnyside Rd
Kootenai ID 83840

Site-Specific Points of Contact

Site Access -
Sandpoint, Idaho

1. Head north on US-2 E/N Fifth Ave toward Alder St - 1.0 mi
2. Continue onto ID-200 - 6.4 mi
3. Turn right onto Sunnyside Cut Off Rd - 1.2 mi
4. Turn left onto Sunnyside Rd for 2.1 mi
5. Slight right to stay on Sunnyside Rd

Destination will be on the right

Preliminary Draft for Agency Review

Looking north towards upper management area.

None

Preliminary Draft for Agency Review

Site Lat Long:	48.323983 -116.385015 (http://www.google.com/maps/place/48.323983,-116.385015)
Strategy Objective:	Notification and exclusion. Prevent contaminant from impacting sensitive area at Pack River Bridge.
Implementation:	Pack River flow direction is to the south. Deploy boom across three separate channels under the highway. Secure upstream end of boom River Right to steel post. Secure downstream end of boom River Left to steel post. Vacuum truck access is poor.
Site Safety Note:	Complete Job Safety Analysis.
Staging Area:	No staging area. Limited parking along SR200. No boat launch facilities. Trestle Creek boat launch is 3.9 miles away. Trestle Creek BL is 3.9 miles away.
Field Notes:	• 4WD Access: **NO** • Seasonal Access Only: **NO** • Locked Gate: **NO**
Resources Targeted:	Pack River delta, fish habitat, wetlands, recreation
Watercourse:	Pack River: gradient is low; substrate is mud; approx. width is 100 ft.; approx. depth is 5 to 10 feet; braided channels; slow moving.

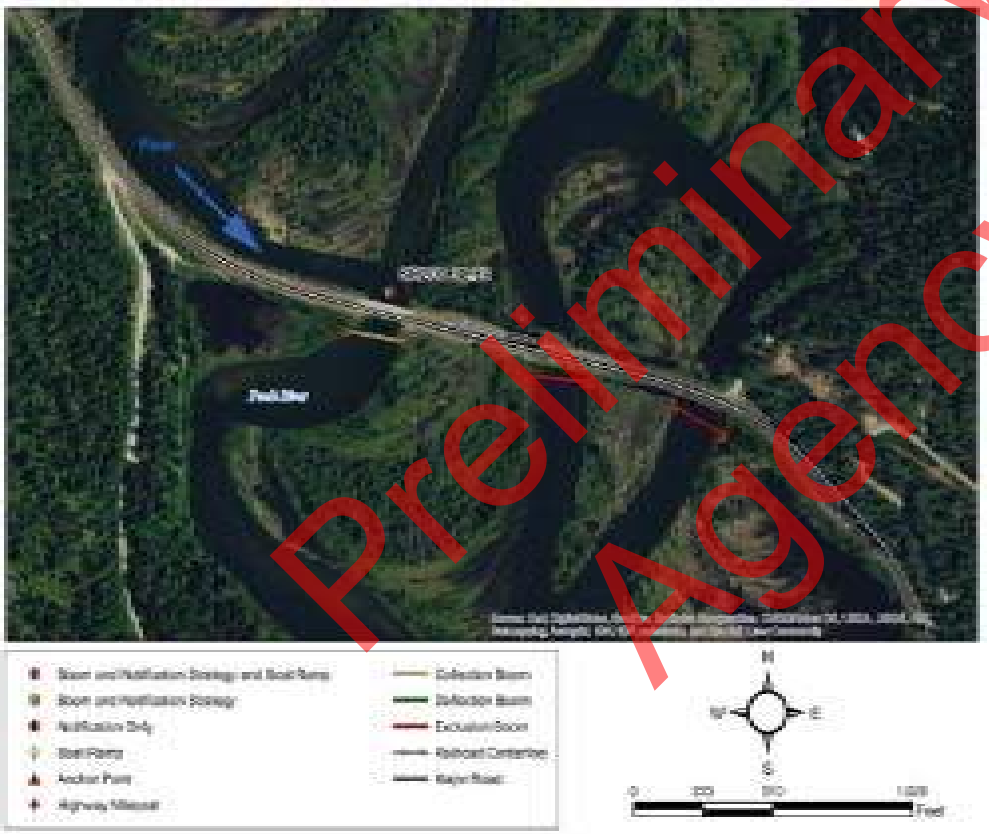

Suggested Equipment	
Quantity	Description
700 ft.	Curtain Boom Tow Bridles
As Appropriate	
900 ft.	Polypropylene Line
18	Steel Post Anchors
As Appropriate	Post pounder, shovels, knife, wood saw
None	In Water Anchors
As Appropriate	PFD work vests/rubber boots
As Appropriate	Throw bags, first aid kit
Jet boat/raft needed for strategy implementation?	N

Suggested Personnel	
Quantity	Title (Function)
1	Booming Team Leader
1	Safety Representative
2 / 1	Haz-Mat Tech (Field Worker) / 1st Responder (Traffic Flagger)
/	Haz-Mat Tech (Boat Operator) / Haz-Mat Tech (Swiftwater)

Preliminary Draft for Agency Review

Nearest Cache: Sandpoint (10.6 miles)
Second Cache: Cabinet Gorge Dam (24.5 mile)

Nearest Address: 3800 Highway 200
Sandpoint ID 83864

Site-Specific Points of Contact

Site Access -

Sandpoint, Idaho

1. Head north on US-2 E/N Fifth Ave toward Alder St - 1.0 mi
2. Continue onto ID-200 - 8.0 mi

Preliminary Draft for Agency Review

Pack River bridge from SR200 east bound.

Pack River bridge from SR200 west bound.

Preliminary Draft for Agency Review

Site Lat Long:	48.279969 -116.39325 (http://www.google.com/maps/place/48.279969,-116.39325)
Strategy Objective:	Notification and exclusion. Prevent contaminant from impacting sensitive area at Sunnyside water intake.
Implementation:	Lake Pend Oreille flow direction is to the west. Secure upstream end of boom East Shoreline to tree. Secure downstream end of boom West Shoreline to tree. Vacuum truck access is good. Notify Sunnyside Water Intake.
Site Safety Note:	Complete Job Safety Analysis.
Staging Area:	On site staging is medium. Private road with room for parking and equipment staging. No boat launch facilities. Hawkin's Point boat launch is 0.8 miles away.
Field Notes:	• Buoy anchor for mid point boom set • 4WD Access: **NO** • Seasonal Access Only: **NO** • Locked Gate: **NO**
Resources Targeted:	Water intake
Watercourse:	Lake Pend Oreille: gradient is low; substrate is mud; approx. depth is over 20 feet.

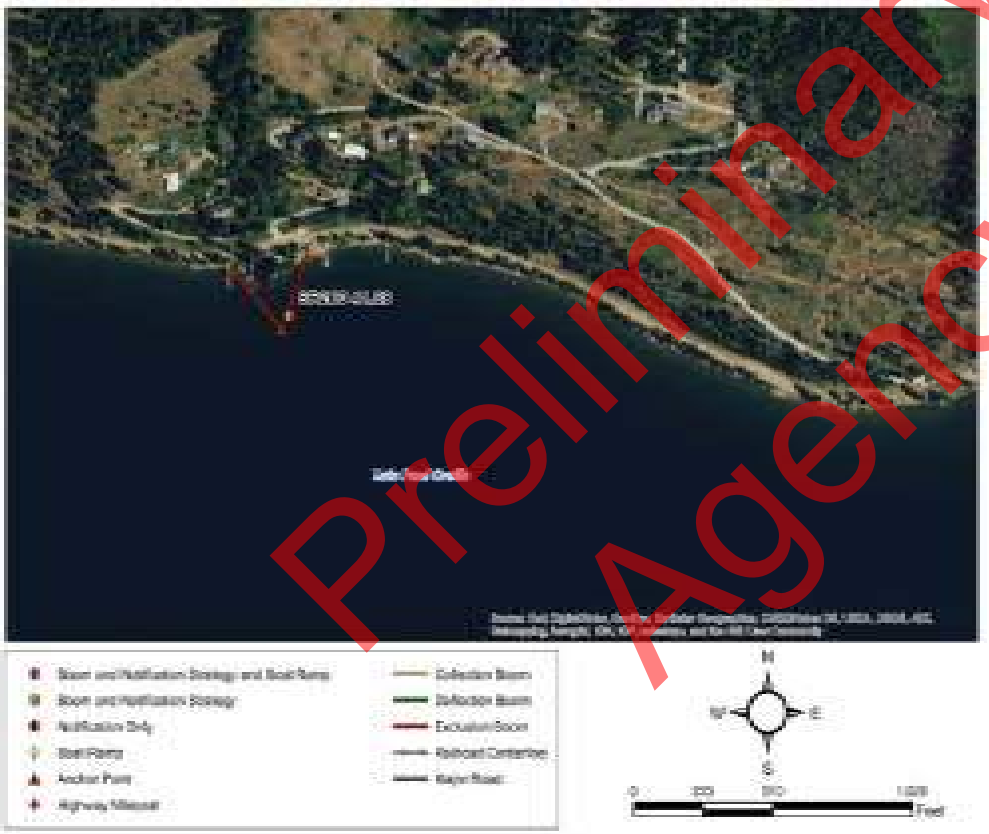

Suggested Equipment	
Quantity	Description
550 ft.	Curtain Boom Tow Bridles
As Appropriate	
650 ft.	Polypropylene Line
0	Steel Post Anchors
As Appropriate	Post pounder, shovels, knife, wood saw
1	In Water Anchors
As Appropriate	PFD work vests/rubber boots
As Appropriate	Throw bags, first aid kit
Jet boat/raft needed for strategy implementation?	Y

Suggested Personnel	
Quantity	Title (Function)
1	Booming Team Leader
1	Safety Representative
2 / 0	Haz-Mat Tech (Field Worker) / 1st Responder (Traffic Flagger)
1 / 1	Haz-Mat Tech (Boat Operator) / Haz-Mat Tech (Swiftwater)

Preliminary Draft for Agency Review

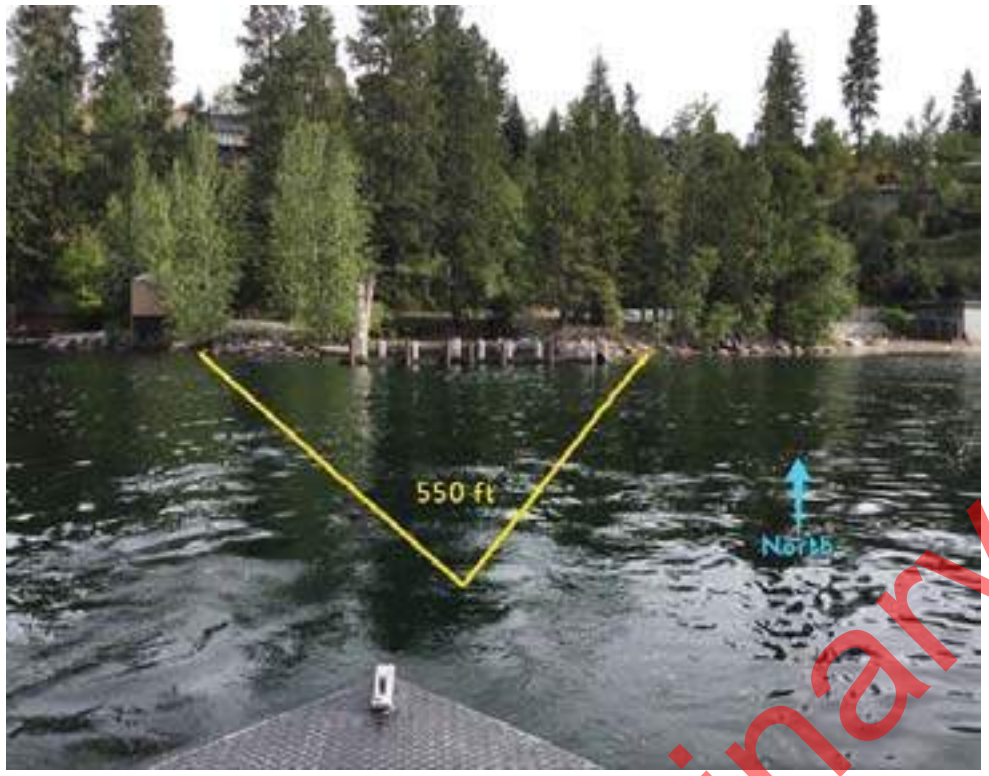

Nearest Cache: Sandpoint (12.8 miles)
Second Cache: Cabinet Gorge Dam (31.6 miles)

Nearest Address: 210 Steamwhistle Way
Sandpoint ID 83864

Site-Specific Points of Contact

Bob Hansen, Intake Manger (208) 265-4270

Site Access -

Sandpoint, Idaho

1. Head north on US-2 E/N Fifth Ave toward Alder St - 1.0 mi
2. Continue onto ID-200 - 6.4 mi
3. Turn right onto Sunnyside Cut Off Rd - 1.2 mi
4. Turn left onto Sunnyside Rd - 2.1 mi
5. Slight right to stay on Sunnyside Rd - 1.3 mi

4787 Sunnyside Road, Sandpoint, Idaho

Preliminary Draft for Agency Review

Looking north at water intake and anchor locations.

Staging area looking west.

Preliminary Draft for Agency Review

Site Lat Long:	448.357166 -116.549228 (http://www.google.com/maps/place/48.357166,-116.549228)
Strategy Objective:	Notification and contaminant collection and recovery.
Implementation:	River flow direction is to the north. Deploy collection boom and initiate contaminant recovery at W Selle Rd. Secure upstream end of boom River Right to steel post. Secure downstream end of boom River Left to steel post. Vacuum truck access is good.
Site Safety Note:	Complete Job Safety Analysis.
Staging Area:	No staging area. Limited parking available on roadside. No boat launch facilities. Sandpoint City Beach boat launch is 7.1 miles away.
Field Notes:	• 4WD Access: **NO** • Seasonal Access Only: **NO** • Locked Gate: **NO**
Resources Targeted:	Colburn creek, wildlife habitat
Watercourse:	Gradient is low; substrate is gravel; approx. width is 10 ft.; approx. depth is 1 to 5 feet; channelized; slow moving

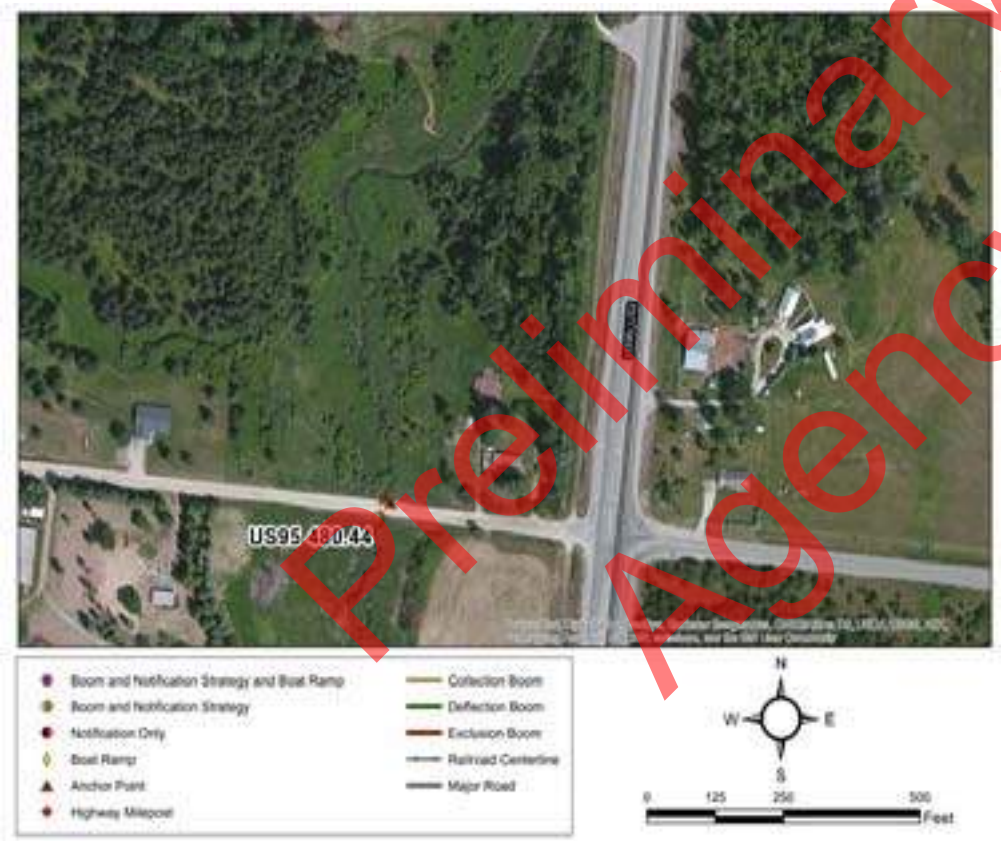

Suggested Equipment	
Quantity	Description
50 ft.	Curtain Boom Tow Bridles
As Appropriate	
50 ft.	Polypropylene Line
6	Steel Post Anchors
As Appropriate	Post pounder, shovels, knife, wood saw
None	In Water Anchors
As Appropriate	PFD work vests/rubber boots
As Appropriate	Throw bags, first aid kit
Jet boat/raft needed for strategy implementation?	N

Suggested Personnel	
Quantity	Title (Function)
1	Booming Team Leader
1	Safety Representative
2 / 1	Haz-Mat Tech (Field Worker) / 1st Responder (Traffic Flagger)
0 / 0	Haz-Mat Tech (Boat Operator) / Haz-Mat Tech (Swiftwater)

Preliminary Draft for Agency Review

Nearest Cache: Sandpoint (6.5 miles)
Second Cache: Bonners (27.3 miles)

Nearest Address: 37 W Selle Rd
Sandpoint ID 83864

Site-Specific Points of Contact

Site Access -

Sandpoint, Idaho
1. Head south on N Fifth Ave toward Cedar St - 171 ft
2. Turn right onto Cedar St - 0.2 mi
3. Turn right onto N Boyer Ave - 0.3 mi
4. At the traffic circle, take the 2nd exit and stay on N Boyer Ave - 2.1 mi
5. Turn right onto Schweitzer Cutoff Rd - 0.2 mi
6. Turn left at the 1st cross street onto US2 E/US-95 N - 3.3 mi
7. Turn left onto W Selle Rd - 187 ft

Preliminary Draft for Agency Review

Looking west at the upstream end of culvert and strategy area.

Looking east across bridge.

Preliminary Draft for Agency Review

Site Lat Long:	48.408283 -116.527569 (http://www.google.com/maps/place/48.408283,-116.527569)
Strategy Objective:	Notification and contaminant collection and recovery.
Implementation:	River flow direction is to the north. Deploy collection boom and initiate contaminant recovery at East Colburn. Secure upstream end of boom River Right to steel post. Secure downstream end of boom River Left to steel post. Vacuum truck access is good.
Site Safety Note:	Complete Job Safety Analysis.
Staging Area:	On site staging is small. Small parking area available along road shoulder adjacent to Colburn creek culvert. No boat launch facilities. Sandpoint City Beach boat launch is 10.6 miles away.
Field Notes:	• 4WD Access: **NO** • Seasonal Access Only: **NO** • Locked Gate: **NO**
Resources Targeted:	Sand creek, Sandpoint municipal water supply, wildlife habitat
Watercourse:	Gradient is low; substrate is gravel; approx. width is 15 ft.; approx. depth is 1 to 5 feet; channelized; slow moving

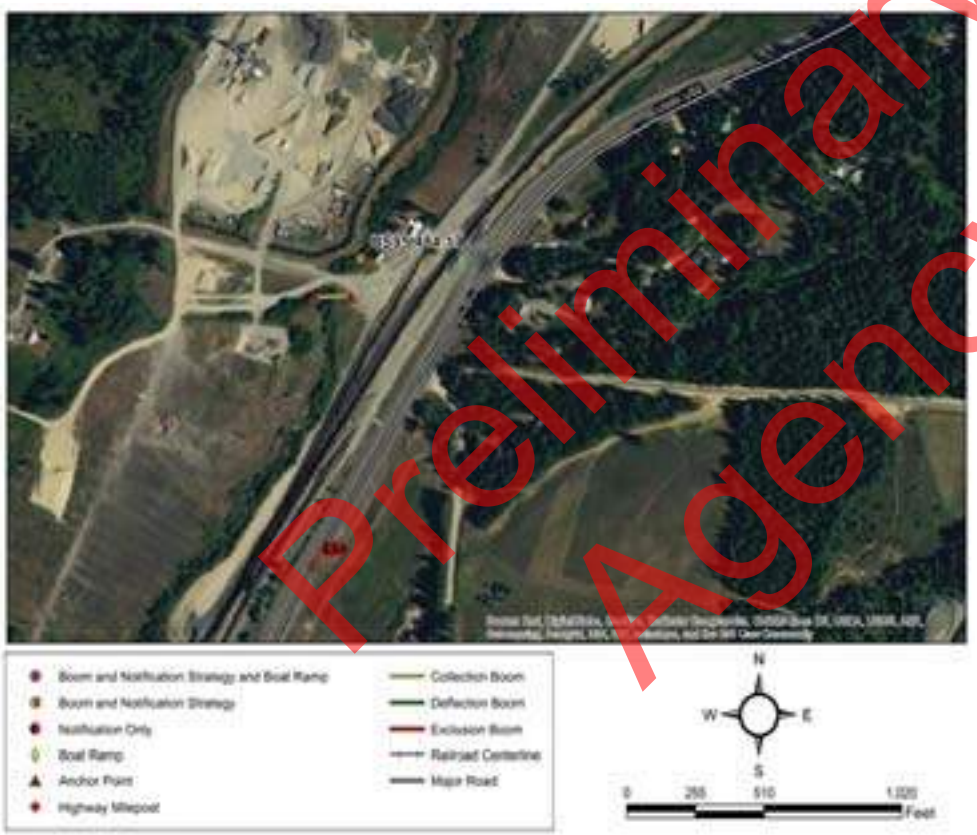

Suggested Equipment	
Quantity	Description
50 ft.	Curtain Boom Tow Bridles
As Appropriate	
50 ft.	Polypropylene Line
6	Steel Post Anchors
As Appropriate	Post pounder, shovels, knife, wood saw
None	In Water Anchors
As Appropriate	PFD work vests/rubber boots
As Appropriate	Throw bags, first aid kit
Jet boat/raft needed for strategy implementation?	N

Suggested Personnel	
Quantity	Title (Function)
1	Booming Team Leader
1	Safety Representative
2 / 0	Haz-Mat Tech (Field Worker) / 1st Responder (Traffic Flagger)
0 / 0	Haz-Mat Tech (Boat Operator) / Haz-Mat Tech (Swiftwater)

Preliminary Draft for Agency Review

Nearest Cache: Sandpoint (10.3 miles)
Second Cache: Bonners (23.5 miles)

Nearest Address: 1-499 Browns Rd
Sandpoint ID 83864

Site-Specific Points of Contact

Site Access -

Sandpoint, Idaho
1. Head north on US-2 E/N Fifth Ave toward Alder St - 1.0 mi
2. Continue onto ID-200 - 361 ft
3. Take the ramp onto US-95N - 8.7 mi
4. Turn left onto Browns Rd - 203 ft
5. Turn left to stay on Browns Rd - 246 ft

Preliminary Draft for Agency Review

Looking south at upstream end of culvert and collection point.

None

Preliminary Draft for Agency Review

Site Lat Long:	48.407838 -116.478474 (http://www.google.com/maps/place/48.407838,-116.478474)
Strategy Objective:	Notification and contaminant collection and recovery.
Implementation:	Pack River flow direction is to the south. Deploy collection boom and initiate contaminant recovery at Lower Pack River Collection Point. Secure upstream end of boom River Left to steel post. Secure downstream end of boom River Right to steel post. Vacuum truck access is poor.
Site Safety Note:	Complete Job Safety Analysis.
Staging Area:	On site staging is small. Small grass parking area on west side of bridge, north of bridge. No boat launch facilities. Trestle Creek boat launch is 14.5 miles away.
Field Notes:	• 4WD Access: **NO** • Seasonal Access Only: **NO** • Locked Gate: **NO**
Resources Targeted:	Pack River, wildlife habitat, recreation
Watercourse:	Pack River: gradient is low; substrate is sand; approx. width is 90 ft.; approx. depth is 1 to 5 feet; channelized; slow moving

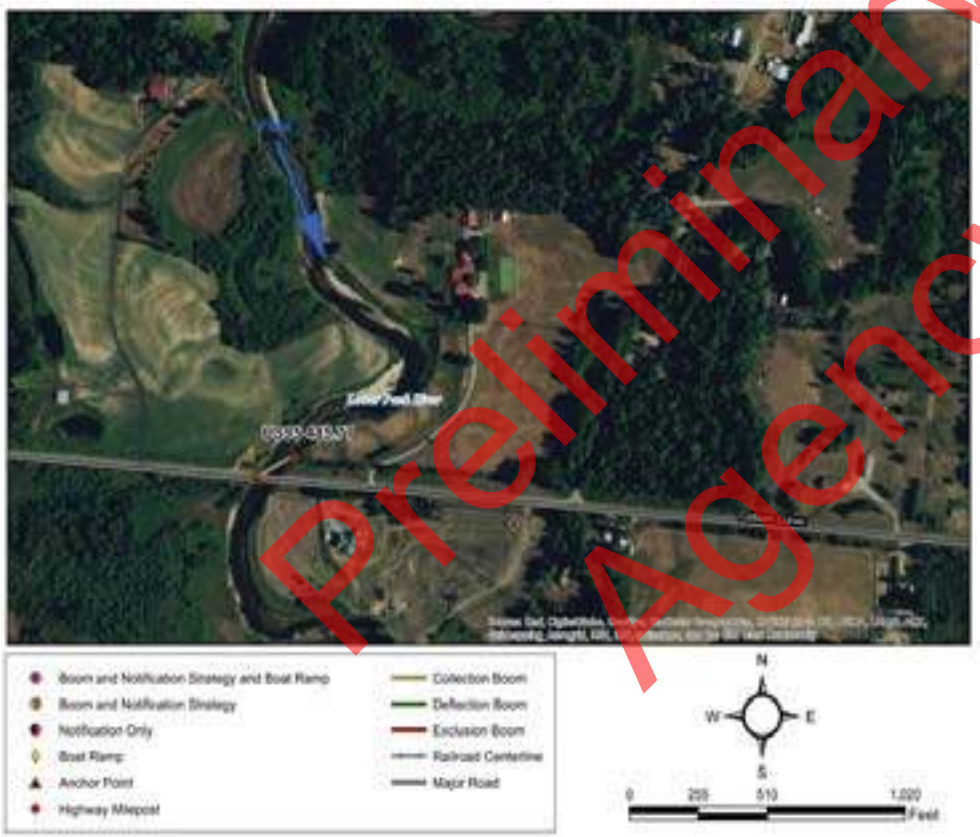

Suggested Equipment	
Quantity	Description
150 ft.	Curtain Boom Tow Bridles
As Appropriate	
225 ft.	Polypropylene Line
6	Steel Post Anchors
As Appropriate	Post pounder, shovels, knife, wood saw
None	In Water Anchors
As Appropriate	PFD work vests/rubber boots
As Appropriate	Throw bags, first aid kit
Jet boat/raft needed for strategy implementation?	N

Suggested Personnel	
Quantity	Title (Function)
1	Booming Team Leader
1	Safety Representative
2 / 1	Haz-Mat Tech (Field Worker) / 1st Responder (Traffic Flagger)
0 / 0	Haz-Mat Tech (Boat Operator) / Haz-Mat Tech (Swiftwater)

Preliminary Draft for Agency Review

Nearest Cache: Sandpoint (12.4 miles)
Second Cache: Bonners (26.9 miles)

Nearest Address: 2771 Rd Colburn Culver
Sandpoint ID 83864

Site-Specific Points of Contact

Site Access -

Sandpoint, Idaho
1. Head north on US-2 E/N Fifth Ave toward Alder St - 1.0 mi
2. Continue onto ID-200 - 361 ft
3. Take the ramp onto US-95N - 8.1 mi
4. Turn right onto Colburn Culver Rd - 2.9 mi

Preliminary Draft for Agency Review

Looking north from collection point on River right to upstream anchor on River left.

Looking west from river bank to staging area.

Preliminary Draft for Agency Review

Site Lat Long:	48.364336 -116.408388 (http://www.google.com/maps/place/48.364336,-116.408388)
Strategy Objective:	Notification and contaminant collection and recovery.
Implementation:	Pack River flow direction is to the south. Deploy collection boom and initiate contaminant recovery at Rapid Lightning Rd Bridge. Secure upstream end of boom River Right to steel post. Secure downstream end of boom River Left to steel post. Vacuum truck access is good. Notify Northside Fire District.
Site Safety Note:	Complete Job Safety Analysis.
Staging Area:	On site staging is small. Small sandy parking area south of bridge near collection point. No boat launch facilities. Trestle Creek boat launch is 8.2 miles away.
Field Notes:	• 4WD Access: **NO** • Seasonal Access Only: **NO** • Locked Gate: **NO**
Resources Targeted:	Pack River, reservoir, wildlife habitat, recreation
Watercourse:	Pack River: gradient is low; substrate is sand; approx. width is 70 ft.; approx. depth is 5 to 10 feet; channelized; slow moving

Suggested Equipment	
Quantity	Description
150 ft.	Curtain Boom Tow Bridles
As Appropriate	
200 ft.	Polypropylene Line
6	Steel Post Anchors
As Appropriate	Post pounder, shovels, knife, wood saw
None	In Water Anchors
As Appropriate	PFD work vests/rubber boots
As Appropriate	Throw bags, first aid kit
Jet boat/raft needed for strategy implementation?	N

Suggested Personnel	
Quantity	Title (Function)
1	Booming Team Leader
1	Safety Representative
2 / 1	Haz-Mat Tech (Field Worker) / 1st Responder (Traffic Flagger)
0 / 0	Haz-Mat Tech (Boat Operator) / Haz-Mat Tech (Swiftwater)

Preliminary Draft for Agency Review

Nearest Cache: Sandpoint (12.3 miles)
Second Cache: Cabinet Gorge Dam (28.8 miles)

Nearest Address: 1572 Rd Rapid Lightning
Sandpoint ID 86864

Site-Specific Points of Contact

Brad Midden, Fire Chief (208) 255-6868

Site Access -

Sandpoint, Idaho
1. Head north on US-2 E/N Fifth Ave toward Alder St - 1.0 mi
2. Continue onto ID-200 - 6.2 mi
3. Turn left onto Colburn Culver Rd - 2.8 mi
4. Turn right onto Rapid Lightning Rd/Rapid Lightning Creek Rd
1572 Rapid Lightning Creek Road

Preliminary Draft for Agency Review

Looking north from collection point on River right to upstream anchor on River left.

Looking east from shore into staging area.

Preliminary Draft for Agency Review

Cardboard
Sector 5

Preliminary Draft for Agency Review

This page intentionally blank

Preliminary Draft for Agency Review

Sector & Map	Site ID & Highway Milepost	Railroad Milepost	Site Name	Accessible by boat at Low Water?	Nearest Boat Ramp or Staging Area
	SR200 40.78	MRL4 107.95	Pack River Trestle	Uncertain	SR200 42.59
	SR200 42.09	MRL4 106.71	Trestle Creek	Unlikely	SR200 42.59
	SR200 46.4	MRL4 102.4	Red Fir Resort Water Intake	Yes	SR200 47.9
Sector 5 Sam Owen	SR200 48.08	MRL4 100.86	Islandview Resort Water Intake	Yes	SR200 47.38
	SR200 49.45	MRL4 99.36	Kullyspell Estates Water Intake	Yes	SR200 47.38 or SR200 49.46
	SR200 50.19	MRL4 98.52	David Thompson Wildlife Preserve	Unlikely	SR200 47.38
	SR200 50.4	MRL4 98.43	Denton Slough	Unlikely	SR200 51.69

Preliminary Draft for Agency Review

Sector 5 Sam Owen Fire District

Go Back to Regional Map

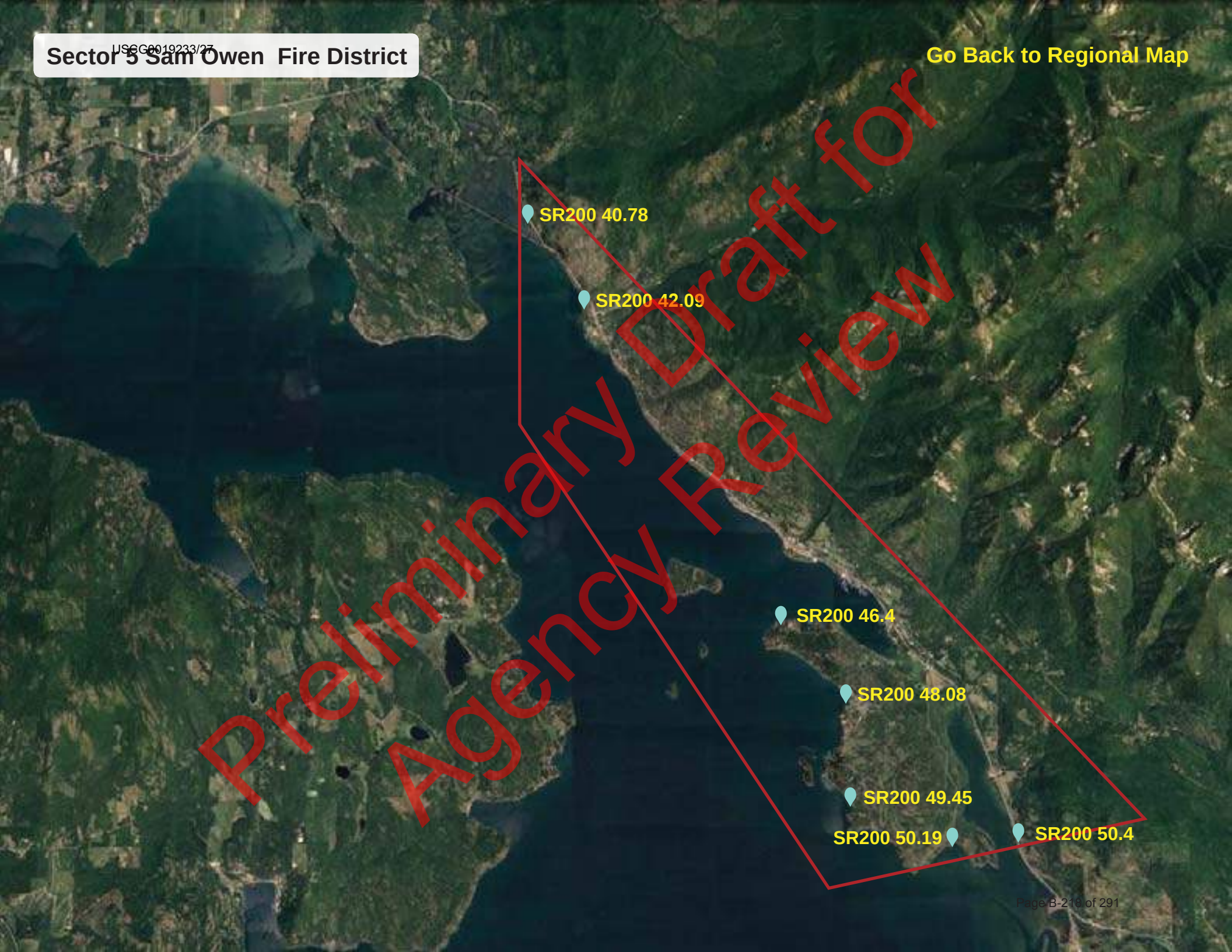

Site Lat Long:	48.29822 -116.36682 (http://www.google.com/maps/place/48.29822,-116.36682)
Strategy Objective:	Notification and exclusion. Prevent contaminant from impacting sensitive area at Pack River Trestle.
Implementation:	Pack River flow direction is to the south. Secure upstream end of boom to East Shoreline to steel post. Secure downstream end of boom to West Shoreline to steel post. Vacuum truck access is poor.
Site Safety Note:	Complete Job Safety Analysis.
Staging Area:	On site staging is small. Use Trestle Creek boat ramp to deploy boom at Pack River Trestle. Small parking area adjacent to trestle for vehicle parking if needed. No boat launch facilities. Trestle Creek boat launch is 1.8 miles away.
Field Notes:	• Exclusion boom on either side of trestle depending on which side of track spill occurs. • 4WD Access: **NO** • Seasonal Access Only: **NO** • Locked Gate: **NO**
Resources Targeted:	Wildlife Habitat, Threatened and Endangered Species, Recreational Use, Reservoir or Lake
Watercourse:	Pack River: gradient is low; substrate is sand; approx. width is 900 ft.; approx. depth is over 20 feet; slow moving; channelized

Suggested Equipment	
Quantity	Description
300 ft.	Curtain Boom Tow Bridles
As Appropriate	
450 ft.	Polypropylene Line
10	Steel Post Anchors
As Appropriate	Post pounder, shovels, knife, wood saw
None	In Water Anchors
As Appropriate	PFD work vests/rubber boots
As Appropriate	Throw bags, first aid kit
Jet boat/raft needed for strategy implementation?	Y

Suggested Personnel	
Quantity	Title (Function)
1	Booming Team Leader
1	Safety Representative
2 / 1	Haz-Mat Tech (Field Worker) / 1st Responder (Traffic Flagger)
1 / 1	Haz-Mat Tech (Boat Operator) / Haz-Mat Tech (Swiftwater)

Preliminary Draft for Agency Review

Nearest Cache: Sandpoint (12.7 miles)
Second Cache: Cabinet Gorge Dam (22.3 miles)

Nearest Address: 41159 Highway

Site-Specific Points of Contact

Site Access -

Sandpoint, Idaho
1. Head north on US-2 E/N Fifth Ave toward Alder St - 1.0 mi
2. Continue onto ID-200 - 17.5 mi
Trestle Creek Boat Launch

Preliminary Draft for Agency Review

Looking south from SR200 toward Pack River Trestle.

Preliminary Draft for Agency Review

None

Site Lat Long:	48.28316 -116.35418 (http://www.google.com/maps/place/48.28316,-116.35418)
Strategy Objective:	Prevent contaminant from impacting sensitive area at Trestle Creek.
Implementation:	Lake Pend Oreille flow direction is to the west. Secure upstream end of boom North Shoreline to steel post. Secure downstream end of boom South Shoreline to steel post.
Site Safety Note:	Complete Job Safety Analysis.
Staging Area:	No staging area. Trestle Creek boat launch is 0.5 miles away.
Field Notes:	• Use buoys as midpoint anchors for boom set • Only accessible by boat from Trestle Creek boat launch • 4WD Access: **NO** • Seasonal Access Only: **YES** • Locked Gate: **NO**
Resources Targeted:	Threatened and Endangered Species
Watercourse:	Lake Pend Oreille: gradient is low; substrate is mud; approx. depth is 1 to 5 feet

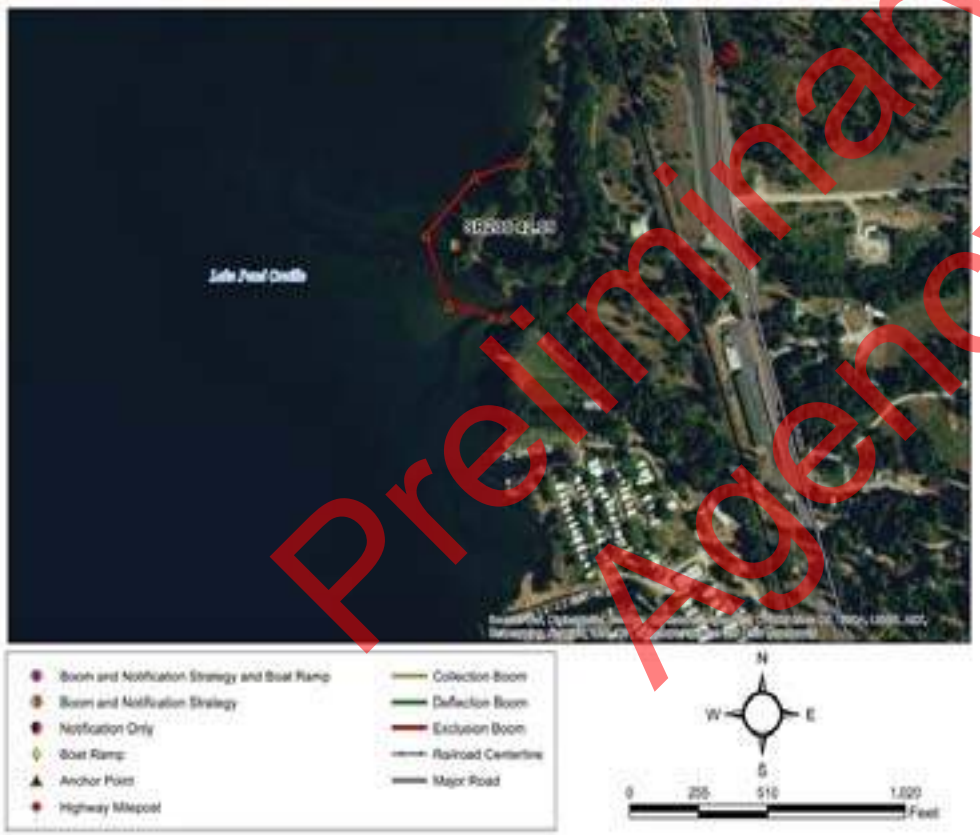

Suggested Equipment	
Quantity	Description
950 ft.	Curtain Boom Tow Bridles
As Appropriate	
1250 ft.	Polypropylene Line
6	Steel Post Anchors
As Appropriate	Post pounder, shovels, knife, wood saw
3	In Water Anchors
As Appropriate	PFD work vests/rubber boots
As Appropriate	Throw bags, first aid kit
Jet boat/raft needed for strategy implementation?	Y

Suggested Personnel	
Quantity	Title (Function)
1	Booming Team Leader
1	Safety Representative
3 / 0	Haz-Mat Tech (Field Worker) / 1st Responder (Traffic Flagger)
1 / 1	Haz-Mat Tech (Boat Operator) / Haz-Mat Tech (Swiftwater)

Preliminary Draft for Agency Review

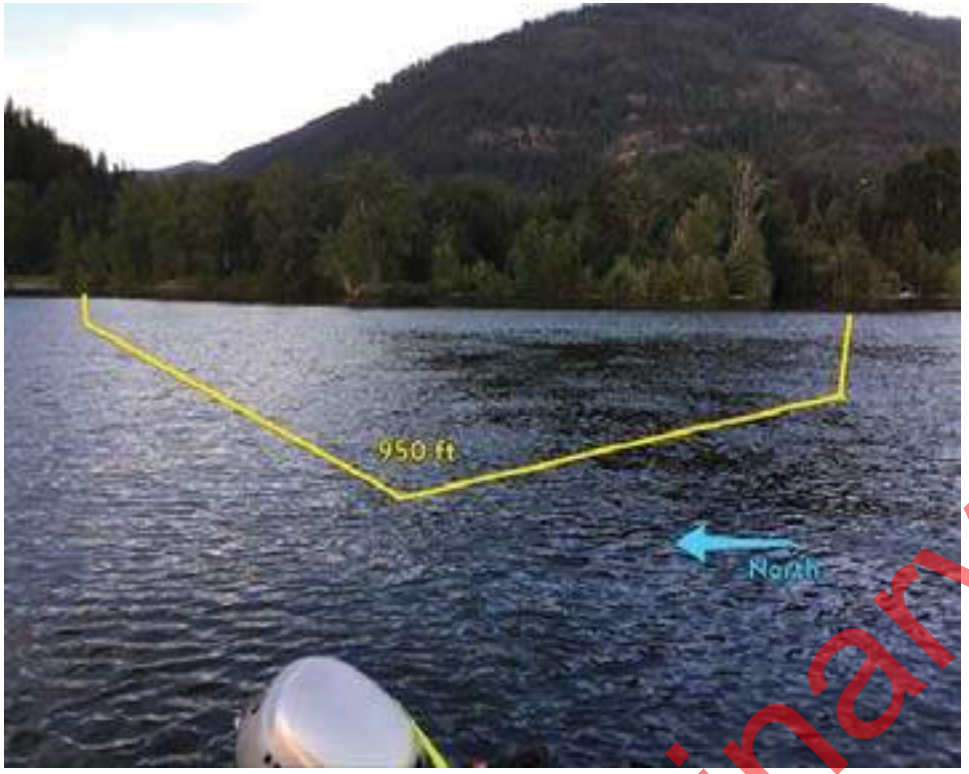

Nearest Cache: Sandpoint (14.1 miles)
Second Cache: Cabinet Gorge Dam (21.1 miles)

Nearest Address: 88 N Park Rd
Hope ID 83836

Site-Specific Points of Contact

Site Access -

Sandpoint, Idaho
1. Head north on US-2 E/N Fifth Ave toward Alder St - 1.0 mi
2. Continue onto ID-200 - 17.5 mi
Trestle Creek Boat Launch

Preliminary Draft for Agency Review

Trestle Creek looking north from Lake Pend Orellie

Preliminary Draft for Agency Review

None

Site Lat Long:	48.228764 -116.301167 (http://www.google.com/maps/place/48.228764,-116.301167)
Strategy Objective:	Notification and exclusion. Prevent contaminant from impacting sensitive area at Red Fir Resort water intake.
Implementation:	Secure upstream end of boom East Shoreline to steel post. Secure downstream end of boom West Shoreline to steel post. Vacuum truck access is poor. Notify Red Fir Water Intake.
Site Safety Note:	Complete Job Safety Analysis.
Staging Area:	On site staging is small. Limited staging area and parking available at resort. No boat launch facilities. Beyond Hope Resort boat launch is 1.8 miles away.
Field Notes:	• 4WD Access: **NO** • Seasonal Access Only: **NO** • Locked Gate: **NO**
Resources Targeted:	Municipal water intake
Watercourse:	Lake Pend Oreille: approx. depth is 10 to 20 feet

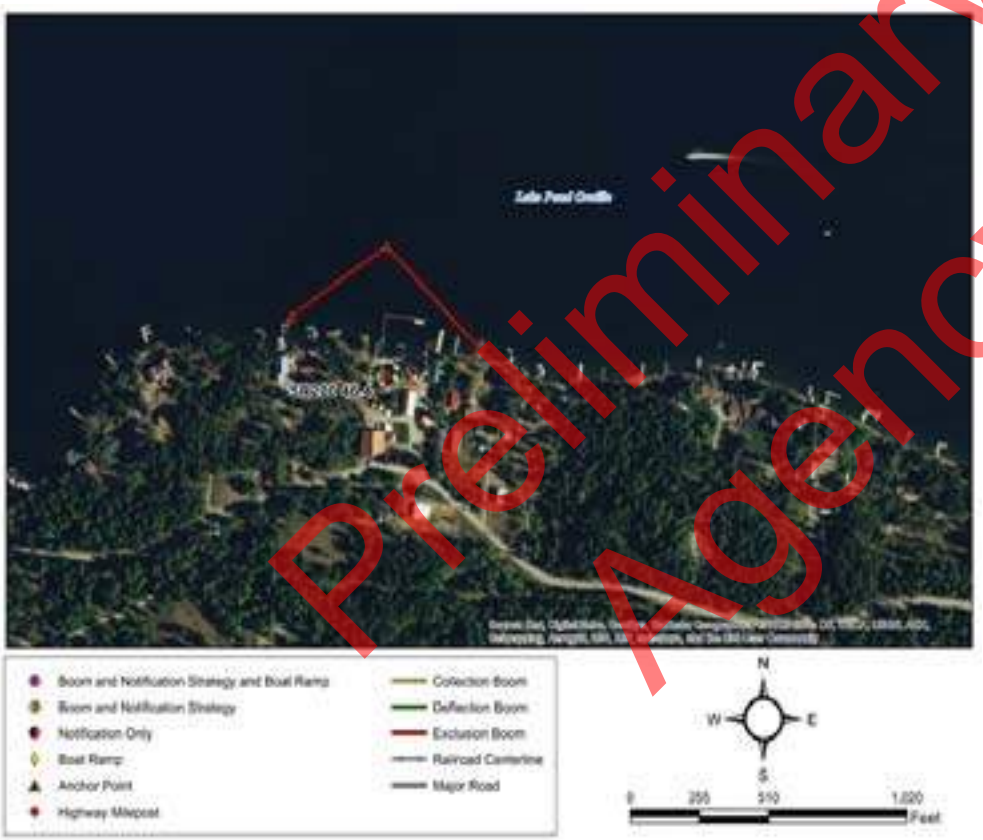

Suggested Equipment	
Quantity	Description
900 ft.	Curtain Boom Tow Bridles
As Appropriate	
1100 ft.	Polypropylene Line
8	Steel Post Anchors
As Appropriate	Post pounder, shovels, knife, wood saw
3	In Water Anchors
As Appropriate	PFD work vests/rubber boots
As Appropriate	Throw bags, first aid kit
Jet boat/raft needed for strategy implementation?	Y

Suggested Personnel	
Quantity	Title (Function)
1	Booming Team Leader
1	Safety Representative
2 / 0	Haz-Mat Tech (Field Worker) / 1st Responder (Traffic Flagger)
1 / 1	Haz-Mat Tech (Boat Operator) / Haz-Mat Tech (Swiftwater)

Preliminary Draft for Agency Review

Nearest Cache: Cabinet Gorge Dam (17.0 miles)
Second Cache: Sandpoint (21.9 miles)

Nearest Address: 1147 Red Fir Rd
Hope ID 83836

Site-Specific Points of Contact

Site Access -

Sandpoint, Idaho
1. Head north on US-2 E/N Fifth Ave toward Alder St - 1.0 mi
2. Continue onto ID-200 18.3 mi
3. Turn right onto Hope Peninsula Rd/NF-1002/Peninsula Rd
4. Continue onto Red Fir Rd - 1.3 mi
1147 Red Fir Road, Hope, Idaho

Preliminary Draft for Agency Review

Water intake

Preliminary Draft for Agency Review

None

Site Lat Long:	48.209413 -116.288354 (http://www.google.com/maps/place/48.209413,-116.288354)
Strategy Objective:	Notification and exclusion. Prevent contaminant from impacting sensitive area at Island View Resort water intake.
Implementation:	Secure upstream end of boom to North Shoreline to steel post. Secure downstream end of boom to South Shoreline to steel post. Notify Island View Resort.
Site Safety Note:	Complete Job Safety Analysis.
Staging Area:	No staging area. Use East Hope Boat Ramp for staging and boat launch. No boat launch facilities. Beyond Hope Resort boat launch is 0.5 miles away.
Field Notes:	• 4WD Access: **NO** • Seasonal Access Only: **YES** • Locked Gate: **NO**
Resources Targeted:	Municipal water intake
Watercourse:	Lake Pend Oreille: substrate is gravel; approx. depth is 10 to 20 feet

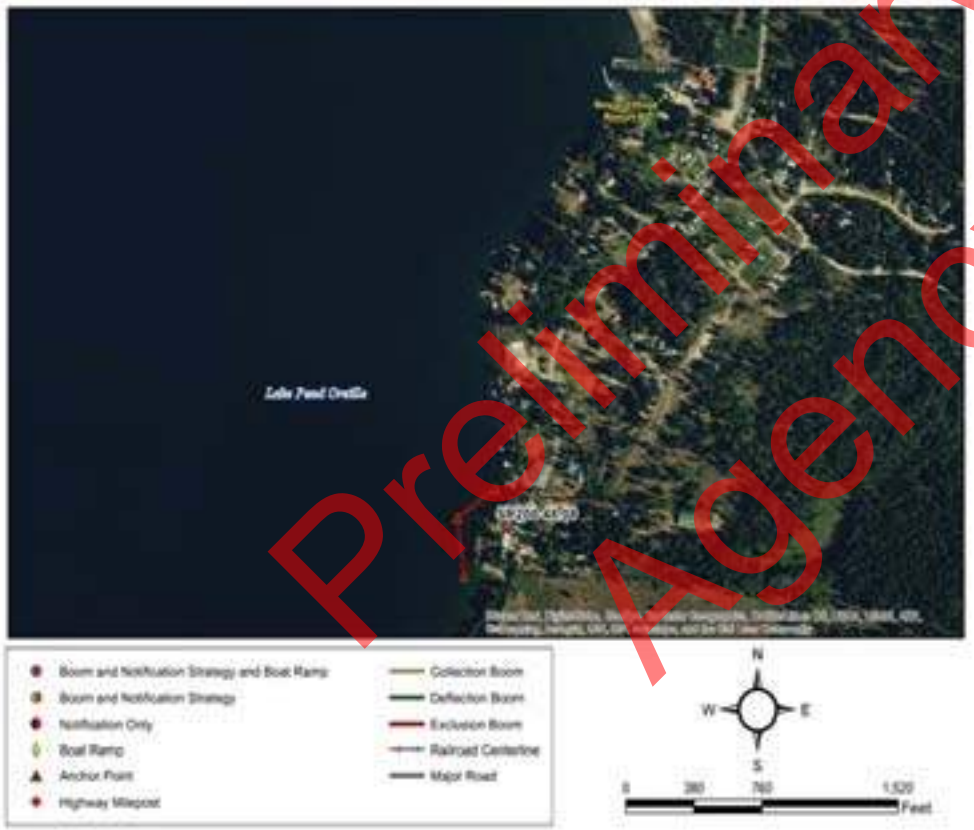

Suggested Equipment	
Quantity	Description
550 ft.	Curtain Boom Tow Bridles
As Appropriate	
750 ft.	Polypropylene Line
None	Steel Post Anchors
As Appropriate	Post pounder, shovels, knife, wood saw
3	In Water Anchors
As Appropriate	PFD work vests/rubber boots
As Appropriate	Throw bags, first aid kit
Jet boat/raft needed for strategy implementation?	Y

Suggested Personnel	
Quantity	Title (Function)
1	Booming Team Leader
1	Safety Representative
3 / 0	Haz-Mat Tech (Field Worker) / 1st Responder (Traffic Flagger)
1 / 1	Haz-Mat Tech (Boat Operator) / Haz-Mat Tech (Swiftwater)

Preliminary Draft for Agency Review

Nearest Cache: Cabinet Gorge Dam (16.8 miles)
Second Cache: Sandpoint (21.8 miles)

Nearest Address: 1767 Peninsula Rd
Hope ID 83836

Site-Specific Points of Contact

Misha Van Booven (208) 264-5509

Site Access -

Sandpoint, Idaho
1. Head north on US-2 E/N Fifth Ave toward Alder St - 1.0 mi
2. Continue onto ID-200 - 18.3 mi
3. Turn right onto Hope Peninsula Rd/NF-1002/Peninsula Rd - 0.8 mi
4. Turn left onto Hope Peninsula Rd/Peninsula Rd - 1.0 mi
1767 Peninsula Road, Hope, Idaho

Preliminary Draft for Agency Review

Surface water intake.

Looking towards the intake from the lake, facing north.

Preliminary Draft for Agency Review

Site Lat Long:	48.197571 -116.28636 (http://www.google.com/maps/place/48.197571,-116.28636)
Strategy Objective:	Notification and exclusion. Prevent contaminant from impacting sensitive area at Kullyspell Estates water intake.
Implementation:	Secure upstream end of boom to North Shoreline to steel post. Secure downstream end of boom to South Shoreline to steel post. Notify Kullyspell Water Intake.
Site Safety Note:	Complete Job Safety Analysis.
Staging Area:	No staging area. Use East Hope Boat Launch for access and staging. No boat launch facilities. Island View boat launch is 0.3 miles away. Island View BL is 0.3 miles away.
Field Notes:	• Use Island View Boat Launch for access. Access from boat only. • 4WD Access: **NO** • Seasonal Access Only: **YES** • Locked Gate: **NO**
Resources Targeted:	Municipal water intake
Watercourse:	Lake Pend Oreille: substrate is gravel; approx. depth is 10 to 20 feet

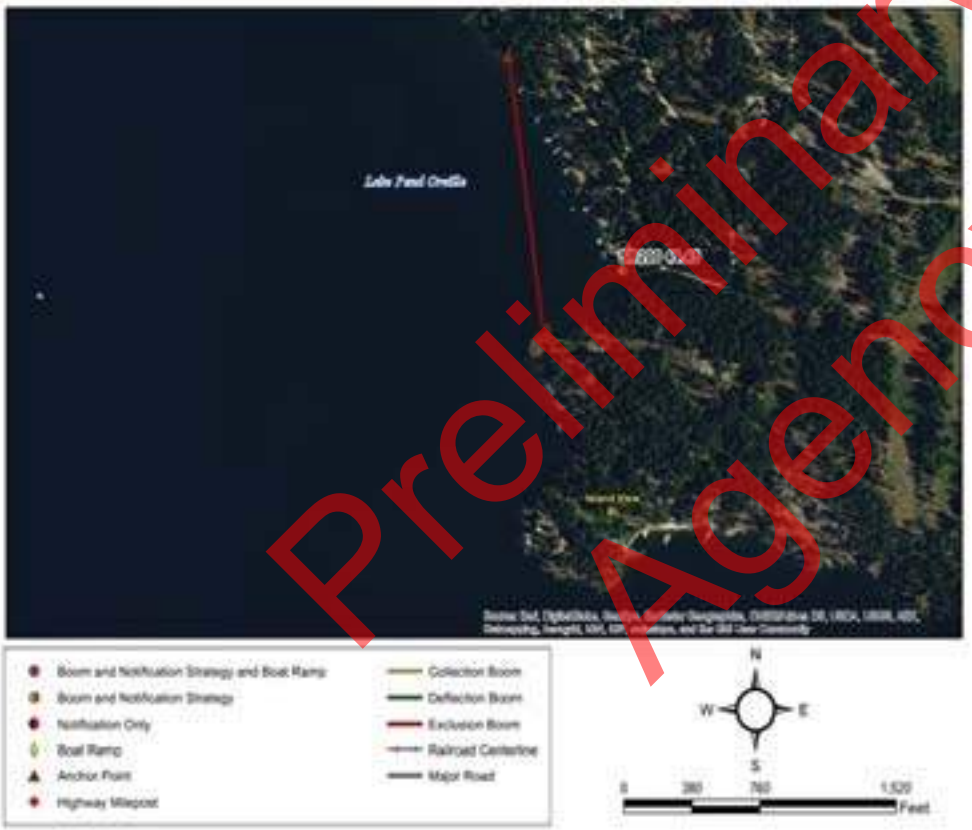

Suggested Equipment	
Quantity	Description
1500 ft.	Curtain Boom Tow Bridles
As Appropriate	
1900 ft.	Polypropylene Line
6	Steel Post Anchors
As Appropriate	Post pounder, shovels, knife, wood saw
1	In Water Anchors
As Appropriate	PFD work vests/rubber boots
As Appropriate	Throw bags, first aid kit
Jet boat/raft needed for strategy implementation?	Y

Suggested Personnel	
Quantity	Title (Function)
1	Booming Team Leader
1	Safety Representative
3 / 0	Haz-Mat Tech (Field Worker) / 1st Responder (Traffic Flagger)
1 / 1	Haz-Mat Tech (Boat Operator) / Haz-Mat Tech (Swiftwater)

Preliminary Draft for Agency Review

Nearest Cache: Cabinet Gorge Dam (17.8 miles)
Second Cache: Sandpoint (22.8 miles)

Nearest Address: 575 Osprey Cr
Hope ID 83836

Site-Specific Points of Contact

Jim Erdman, Intake Manager (208) 290-4184

Site Access - Boat access ony, use Island view boat launch, directions below

Sandpoint, Idaho
1. Head north on US-2 E/N Fifth Ave toward Alder St - 1.0 mi
2. Continue onto ID-200 - 18.3 mi
3. Turn right onto Hope Peninsula Rd/NF-1002/Peninsula Rd - 0.8 mi
4. Turn left onto Hope Peninsula Rd/Peninsula Rd - 1.3 mi
5. Turn left onto E David Thompson Rd - 0.1 mi
6. Turn right onto Osprey Cir - 0.5 mi
7. Slight left onto Kienholz Dr - 266 ft
Kienholz Drive, Hope, Idaho

Preliminary Draft for Agency Review

Water intake for Kullyspell Estates located offshore in this area.

Looking at the estates from the lake, facing north.

Preliminary Draft for Agency Review

Site Lat Long:	48.191753 -116.261614 (http://www.google.com/maps/place/48.191753,-116.261614)
Strategy Objective:	Notification and exclusion. Prevent contaminant from impacting sensitive area at David Thompson Wildlife Preserve.
Implementation:	Secure upstream end of boom North Shoreline to steel post. Secure downstream end of boom North Shoreline to steel post. Vacuum truck access is poor. Not accessible by boat in low water.
Site Safety Note:	Complete Job Safety Analysis.
Staging Area:	No staging area. No boat launch facilities. Hope Marina boat launch is 2.6 miles away.
Field Notes:	• Private road extends along wildlife preserve, through this road one could access the preserve via land. A private driveway or yard could potentially be used as a staging area, but no boat ramp is present. Closest boat ramp is Hope Marina. • 4WD Access: **NO** • Seasonal Access Only: **NO** • Locked Gate: **NO**
Resources Targeted:	Wildlife
Watercourse:	Lake Pend Oreille:

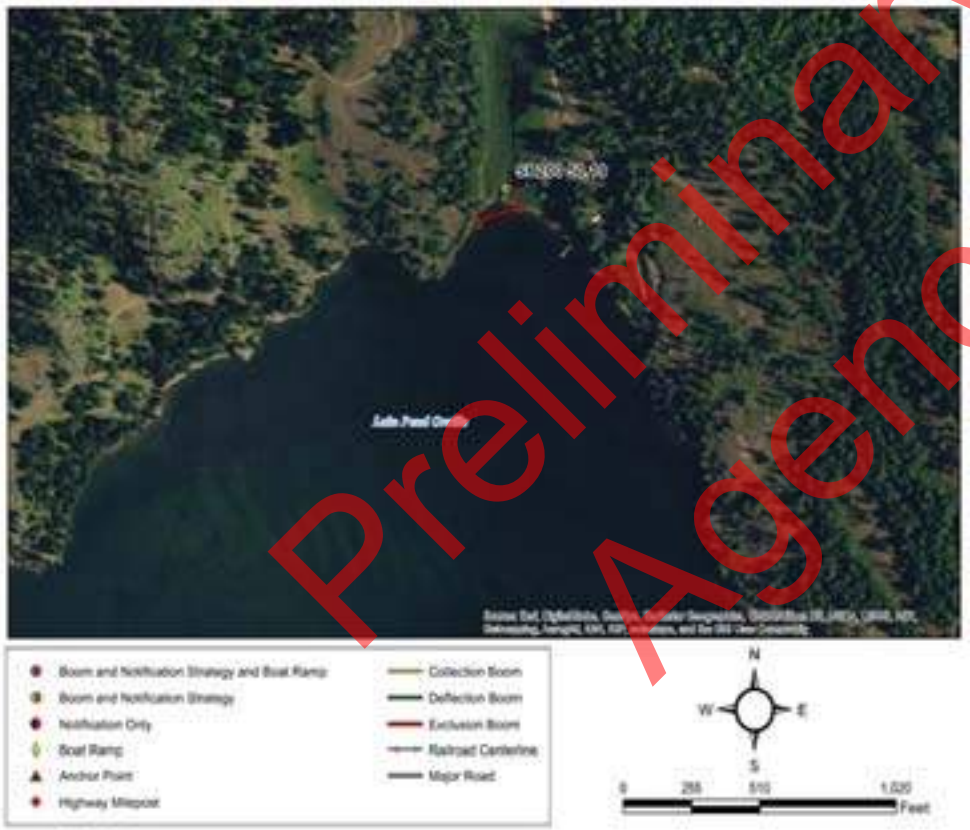

Suggested Equipment	
Quantity	Description
400 ft.	Curtain Boom Tow Bridles
As Appropriate	
525 ft.	Polypropylene Line
6	Steel Post Anchors
As Appropriate	Post pounder, shovels, knife, wood saw
1	In Water Anchors
As Appropriate	PFD work vests/rubber boots
As Appropriate	Throw bags, first aid kit
Jet boat/raft needed for strategy implementation?	Y

Suggested Personnel	
Quantity	Title (Function)
1	Booming Team Leader
1	Safety Representative
2 / 0	Haz-Mat Tech (Field Worker) / 1st Responder (Traffic Flagger)
1 / 1	Haz-Mat Tech (Boat Operator) / Haz-Mat Tech (Swiftwater)

Preliminary Draft for Agency Review

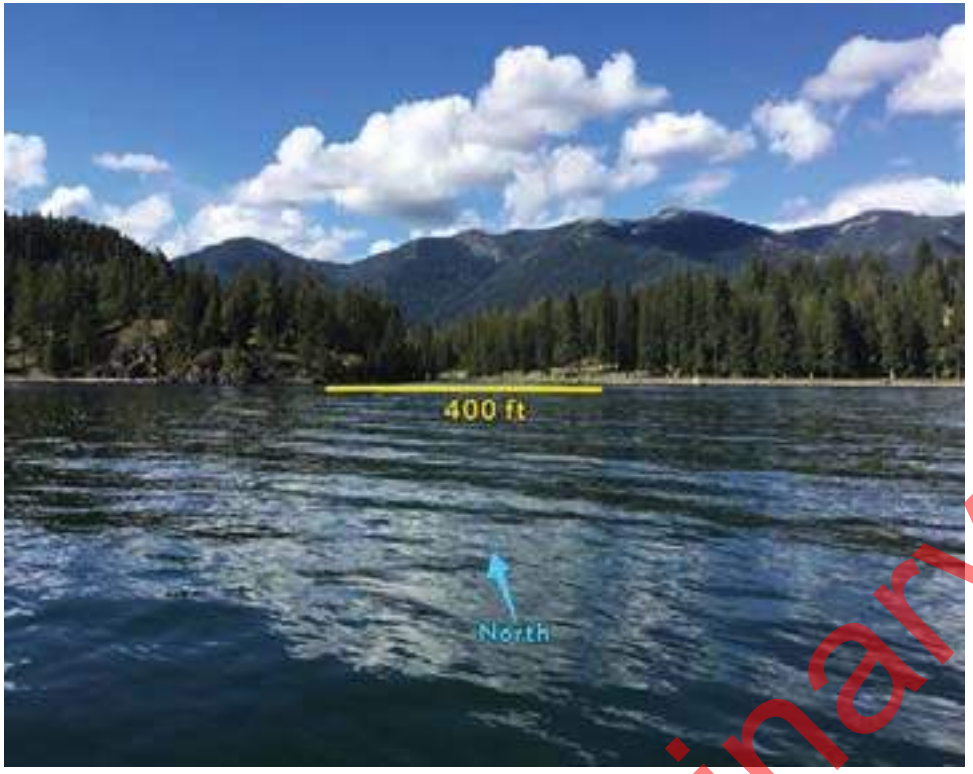

Nearest Cache: Cabinet Gorge Dam (16.9 miles)
Second Cache: Sandpoint (21.9 miles)

Nearest Address: 296 Hope School Rd
Hope ID 83836

Site-Specific Points of Contact

Site Access -

Sandpoint, Idaho
1. Head north on US-2 E/N Fifth Ave toward Alder St - 1.0 mi
2. Continue onto ID-200 - 18.3 mi
3. Turn right onto Hope Peninsula Rd/NF-1002/Peninsula Rd - 92 ft
4. Turn left onto Hope School Rd - 0.3 mi
5. Turn left - 141 ft
6. Slight right - 92 ft
255 Hope School Road, Hope, Idaho

Preliminary Draft for Agency Review

Close-up view of wildlife preserve, facing northwest.

Private residences, that may be used as a possible staging ground, they lie just east of wildlife preserve.

Preliminary Draft for Agency Review

Site Lat Long:	48.192413 -116.246086 (http://www.google.com/maps/place/48.192413,-116.246086)
Strategy Objective:	Notification and exclusion. Prevent contaminant from impacting sensitive area at Denton Slough.
Implementation:	Three booming options are suggested depending upon source of contamination, wind direction and water level. **See Section 4.3.2 and the end of this strategy data sheet for further descriptions for 3 booming options.**
Site Safety Note:	Complete Job Safety Analysis. Low water lake levels will result in very muddy and shallow channels
Staging Area:	On site staging is large. Large parking area for vehicles and equipment on north side of slough, south side of the highway. No boat launch facilities. Clark Fork River Driftyard boat launch is 1.5 miles away.
Field Notes:	• Use Clark Fork River boat ramp for access from water. No boat ramp at this location. Boom to be placed across inlet of slough or around point at south side of slough inlet depending on wind or spill location. • See supplemental information at the end of this strategy data sheet for further information.
Resources Targeted:	Recreation, Reservoir, Threatened and Endangered Species, cultural resources
Watercourse:	Lake Pend Oreille; substrate is gravel; approx. width is 1500 ft.; approx. depth is over 20 feet; slow moving; channelized

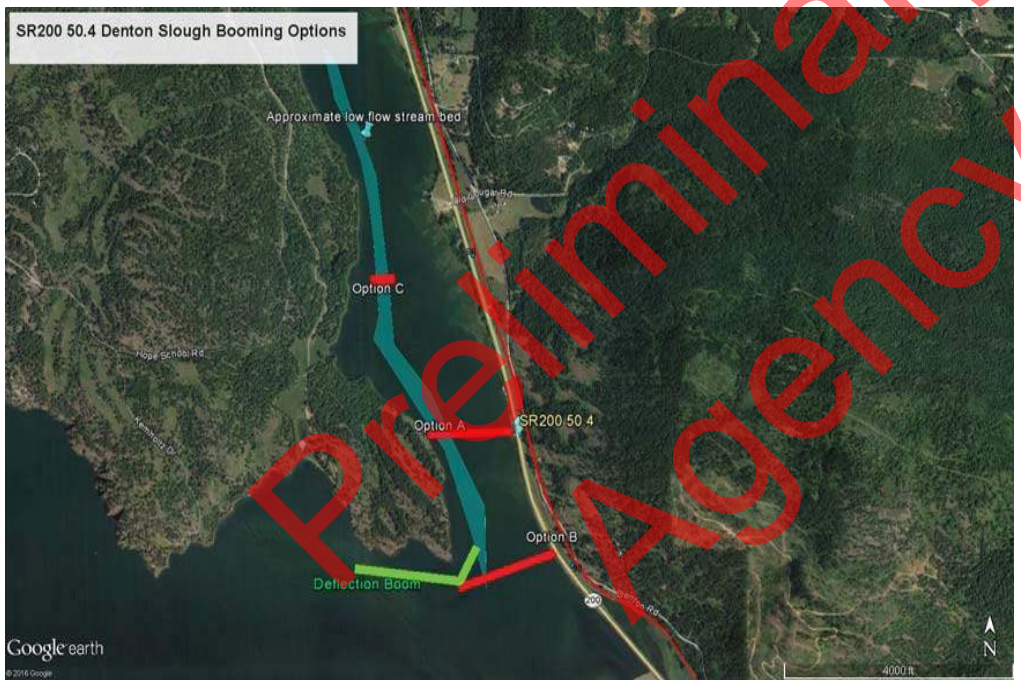

Suggested Equipment	
Quantity	Description
1900 ft.	Curtain Boom Tow Bridles
As Appropriate	skimmer and vacuum truck
2400 ft.	Polypropylene Line
10	Steel Post Anchors
As Appropriate	Post pounder, shovels, knife, wood saw
3	In Water Anchors
As Appropriate	PFD work vests/rubber boots
As Appropriate	Throw bags, first aid kit
Jet boat/raft needed for strategy implementation?	Y

Suggested Personnel	
Quantity	Title (Function)
1	Booming Team Leader
1	Safety Representative
2 / 0	Haz-Mat Tech (Field Worker) / 1st Responder (Traffic Flagger)
1 / 1	Haz-Mat Tech (Boat Operator) / Haz-Mat Tech (Swiftwater)

Visited on 2016-06-29

Preliminary Draft for Agency Review

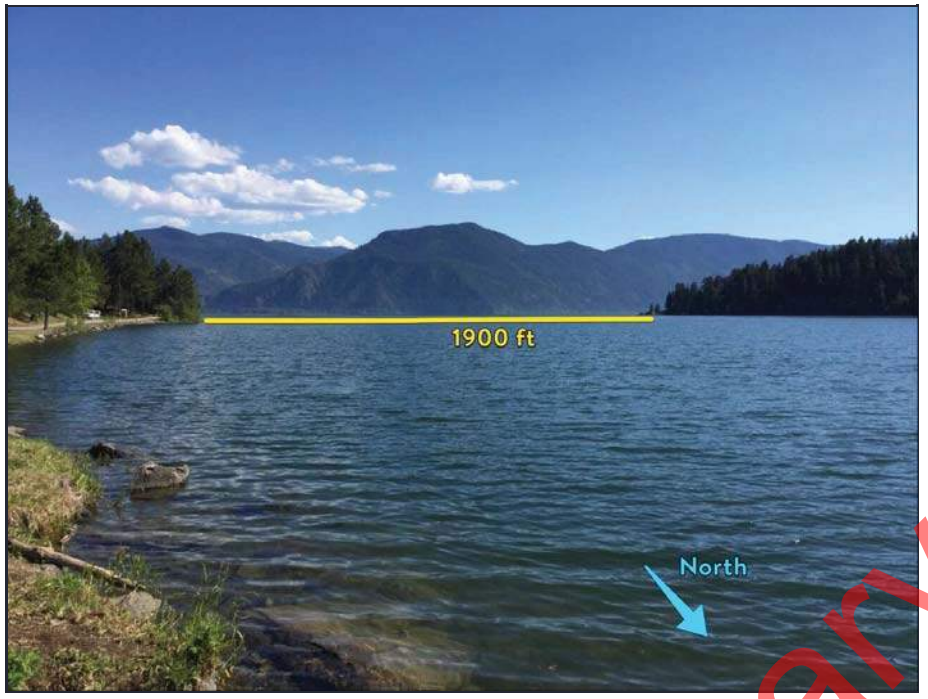

Nearest Cache: Cabinet Gorge Dam (12.8 miles)
Second Cache: Sandpoint (22.2 miles)

Nearest Address: 4523 Denton Rd
Hope ID 83836

Site-Specific Points of Contact:
US Army Corps of Engineers
State Historical Preservation Office
Kalispell Tribe

Site Acess- directions to Clark Fork River Driftyard boat launch

Sandpoint, Idaho
1. Head north on on US-2 E/N Fifth Ave
2. Continue onto ID-200
3. Continue for 21.6 miles
(If you cross over the RR track bridge, you went too far)
4. Turn right onto Driftyard Road; continue for about 1 mile.

Preliminary Draft for Agency Review

Denton slough staging area.

View from west end of staging area looking at the mouth of Denton slough.

Preliminary Draft for Agency Review

Denton Slough	(MRL4 98.43) **SR200 50.4**
Supplemental Information	
Implementation	Three booming options are suggested depending upon source of contamination, wind direction and water level. **See Section 4.3.2 for further descriptions and a larger booming photo.** • Boom Option A—secure boom to east and west shorelines to steel posts with one in-water anchor in the middle. • Boom Option B—Secure east side to steel post and west side to an in-water anchor, with another in-water anchor in the middle if needed. Boom Option C for low water situations – secure east and west sides to steel posts driven into channel bottom. • Anticipate significant mud for Boom Option C. • Deploy deflection boom as shown in photo below for contamination moving from the lake northwards.

Field Notes	• No vehicle access on west side; Dormar Drive, also known as Hope School Road, is gated and does not reach the shore.
	• Vacuum truck access is good on east side
	• Use Clark Fork River boat ramp for access from water. No boat ramp at this location
	• 4WD Access: **NO**
	• Seasonal Access Only: **No**
	• Locked Gates:
	  ○ West side -- **Yes**
	  ○ East side -- **NO**

Contact Notes	For all booming options, contact US Army Corps of Engineers, State Historical Preservation Office, and Kalispell Tribe for boom anchor location limitations.

Preliminary Draft for Agency Review

Figure 4-3 SR200 50.4 Denton Slough Booming Options

Preliminary Draft for Agency Review

USCG0019463/27

This page intentionally blank

Preliminary Draft for Agency Review

Preliminary Draft for Agency Review

Cardboard
Sector 6

This page intentionally blank

Preliminary Draft for Agency Review

Sector & Map	Site ID & Highway Milepost	Railroad Milepost	Site Name	Accessible by boat at Low Water?	Nearest Boat Ramp or Staging Area
Sector 6 Clark Fork	SR200 54.83	MRL4 94.47	Johnson Creek Trestle	Unlikely	SR200 54.83
	SR200 56.05	MRL4 92.92	Clark Fork Bridge	Yes	SR200 57.07
	SR200 57.12	MRL4 91.79	Lower Fish Hatchery Slough	Uncertain	SR200 57.07
	SR200 58.62	MRL4 90.45	Upper Fish Hatchery Slough	Uncertain	SR200 58.77
	SR200 60.79	MRL4 87.66	Clark Fork River Access	Yes	SR200 60.79
	SR200 61.63	MRL4 86.81	Cabinet Gorge Fish Hatchery	Yes	on site
	SR200 62.95	MRL4 85.35	Cabinet Gorge Dam	Yes	on site

Preliminary Draft for Agency Review

Sector 6 Clark Fork
USCG0019513/27
Go Back to Regional Map
SR200 54.83
SR200 56.05
SR200 57.12
SR200 58.62
SR200 60.79
SR200 62.95
SR200 61.63
Preliminary Draft for Agency Review

Site Lat Long:	48.141411 -116.205066 (http://www.google.com/maps/place/48.141411,-116.205066)
Strategy Objective:	Notification and exclusion. Prevent contaminant from impacting sensitive area at Johnson Creek Trestle.
Implementation:	Clark Fork flow direction is to the west. Secure upstream end of boom River Left to steel post. Secure downstream end of boom River Left to steel post. Vacuum truck access is good.
Site Safety Note:	Complete Job Safety Analysis.
Staging Area:	On site staging is small. The staging area consists of a small gravel boat ramp, off of a county road. There is very limited parking and working area. Gravel boat launch. Derr Island boat launch is at site.
Field Notes:	• The Johnson Creek road trestle is privately owned by Delta Shore estates. With access to this road one could do exclusion boom without a boat, but a boat would greatly assist the operation. • 4WD Access: **NO** • Seasonal Access Only: **NO** • Locked Gate: **NO**
Resources Targeted:	Wildlife, Recreation
Watercourse:	Clark Fork: gradient is low; substrate is gravel; approx. width is 900 ft.; approx. depth is 10 to 20 feet; braided channels; slow moving

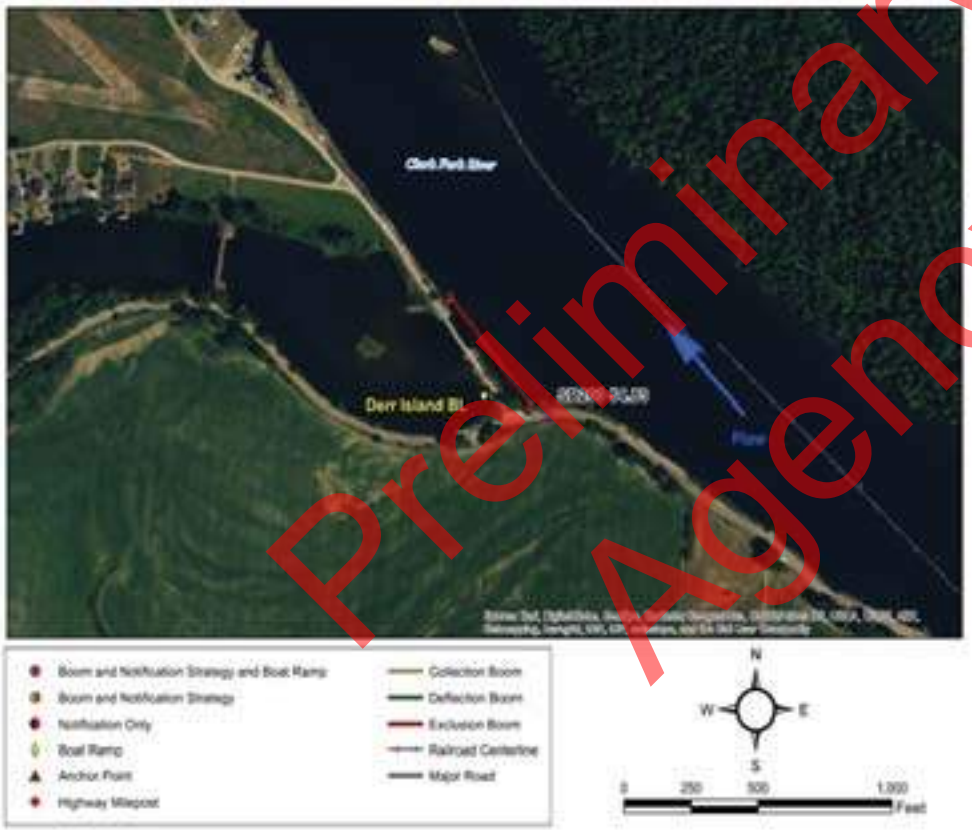

Suggested Equipment	
Quantity	Description
300 ft.	Curtain Boom Tow Bridles
As Appropriate	
400 ft.	Polypropylene Line
6	Steel Post Anchors
As Appropriate	Post pounder, shovels, knife, wood saw
10	In Water Anchors
As Appropriate	PFD work vests/rubber boots
As Appropriate	Throw bags, first aid kit
Jet boat/raft needed for strategy implementation?	Y

Suggested Personnel	
Quantity	Title (Function)
1	Booming Team Leader
1	Safety Representative
1 / 0	Haz-Mat Tech (Field Worker) / 1st Responder (Traffic Flagger)
1 / 1	Haz-Mat Tech (Boat Operator) / Haz-Mat Tech (Swiftwater)

Preliminary Draft for Agency Review

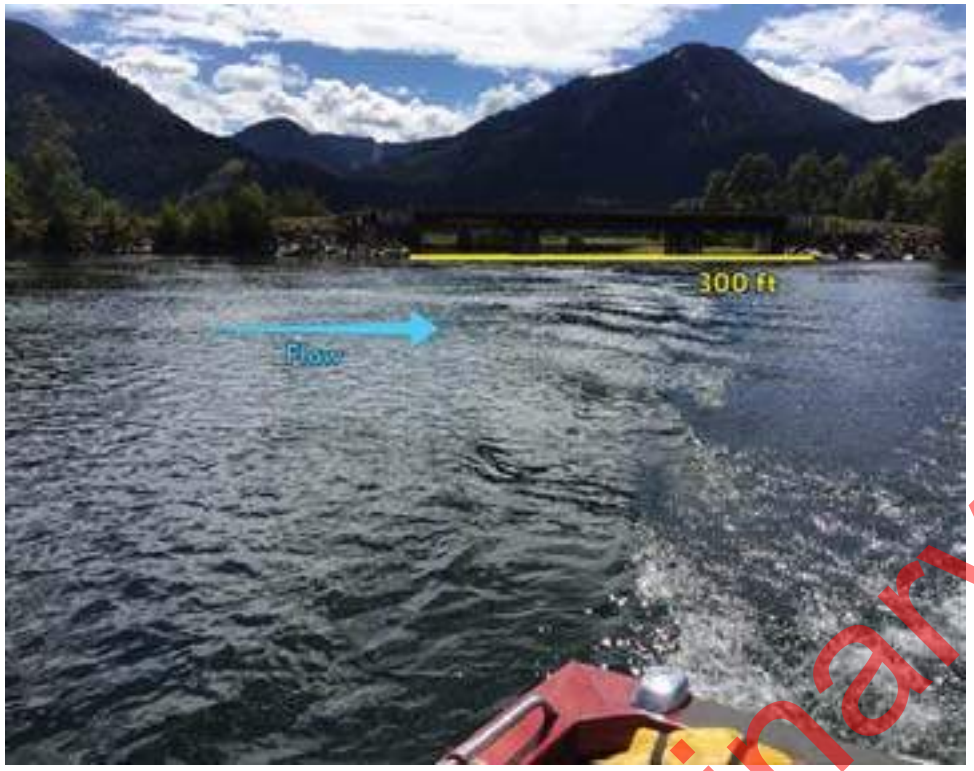

Nearest Cache: Cabinet Gorge Dam (10.5 miles)
Second Cache: Sandpoint (29.6 miles)

Nearest Address: 1348 Johnson Crk Rd
Clark Fork ID 83811

Site-Specific Points of Contact

Site Access -

Sandpoint, Idaho
1. Head north on US-2 E/N Fifth Ave toward Alder St - 1.0 mi
2. Continue onto ID-200 - 25.4 mi
3. Turn right onto Stephen St - 0.3 mi
4. Turn left onto S River Rd - 0.7 mi
5. Continue onto Johnson Creek Rd - 295 ft
6. Turn right to stay on Johnson Creek Rd - 1.6 mi
Destination will be on the right

Preliminary Draft for Agency Review

Looking South, towards Johnson Creek road bridge over Clark Fork South braid.

Looking South, towards Johnson Creek road bridge over Clark Fork South braid.

Preliminary Draft for Agency Review

Site Lat Long:	448.135 -116.174465 (http://www.google.com/maps/place/48.135,-116.174465)
Strategy Objective:	Notification and contaminant collection and recovery.
Implementation:	Clark Fork flow direction is to the west. Deploy collection boom and initiate contaminant recovery at Clark Fork Bridge. Secure upstream end of boom River Right to bridge piling. Secure downstream end of boom River Left to steel post. Vacuum truck access is poor.
Site Safety Note:	Complete Job Safety Analysis.
Staging Area:	On site staging is small. Small vehicle and equipment parking area at sportsman access on west side of south river road bridge. No boat launch facilities. Pint Lane boat launch is 1.4 miles away.
Field Notes:	• 4WD Access: **NO** • Seasonal Access Only: **NO** • Locked Gate: **NO**
Resources Targeted:	Wildlife Habitat, Threatened and Endangered Species, Recreational Use
Watercourse:	Clark Fork: gradient is low; substrate is gravel; approx. width is 840 ft.; approx. depth is 10 to 20 feet; channelized; slow moving

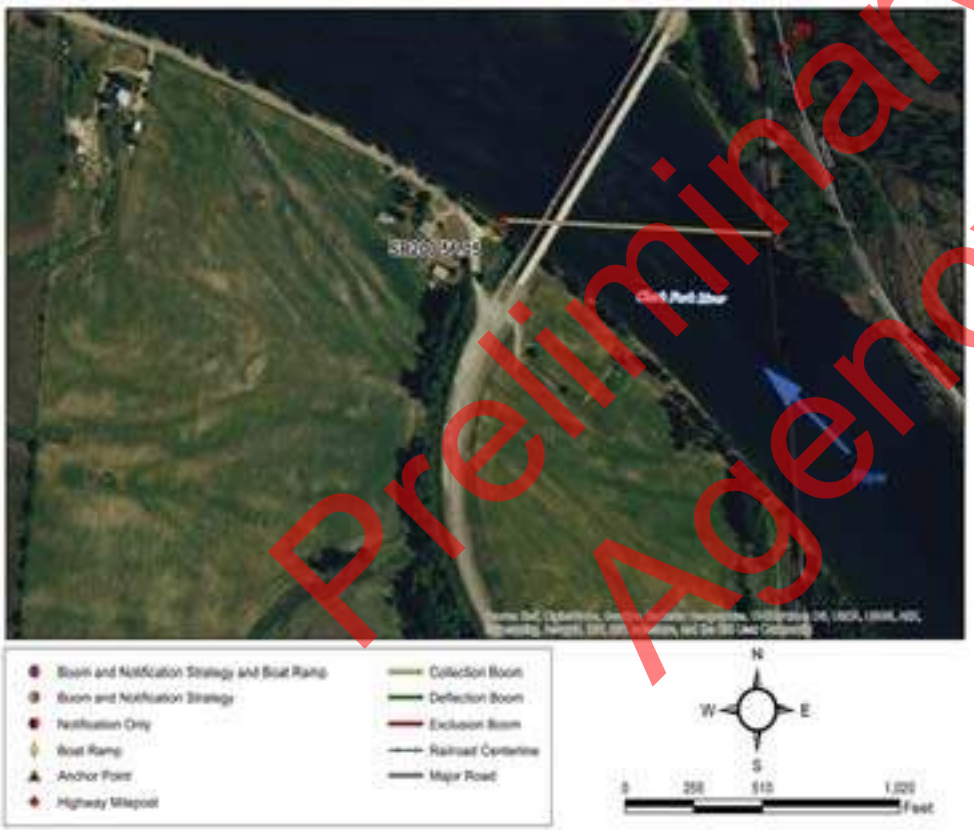

Suggested Equipment	
Quantity	Description
1100 ft.	Curtain Boom Tow Bridles
As Appropriate	
1350 ft.	Polypropylene Line
5	Steel Post Anchors
As Appropriate	Post pounder, shovels, knife, wood saw
2	In Water Anchors
As Appropriate	PFD work vests/rubber boots
As Appropriate	Throw bags, first aid kit
Jet boat/raft needed for strategy implementation?	Y

Suggested Personnel	
Quantity	Title (Function)
1	Booming Team Leader
1	Safety Representative
3 / 0	Haz-Mat Tech (Field Worker) / 1st Responder (Traffic Flagger)
1 / 1	Haz-Mat Tech (Boat Operator) / Haz-Mat Tech (Swiftwater)

Preliminary Draft for Agency Review

Nearest Cache: Cabinet Gorge Dam (9.0 miles)
Second Cache: Sandpoint (28.1 miles)

Nearest Address: 70 Johnson Crk Rd
Clark Fork ID 83811

Site-Specific Points of Contact

Site Access - By boat, directions to Johnson Creek Boat launch

Sandpoint, Idaho
1. Head north on US-2 E/N Fifth Ave toward Alder St - 1.0 mi
2. Continue onto ID-200 - 25.4 mi
3. Turn right onto Stephen St - 0.3 mi
4. Turn left onto S River Rd - 0.7 mi
5. Continue onto Johnson Creek Rd - 295 ft
6. Turn right to stay on Johnson Creek Rd - 9.5 mi
7. Turn right onto Johnson Creek Rd/NF-278 - 5.0 mi
8. Turn left to stay on Johnson Creek Rd/NF-278 - 3.4 mi

Johnson Creek Boat Launch

Preliminary Draft for Agency Review

View looking upstream from collection point to River right bridge piling anchor.

Looking east at the staging area from South Side River Road.

Preliminary Draft for Agency Review

Site Lat Long:	48.123607 -116.155906 (http://www.google.com/maps/place/48.123607,-116.155906)
Strategy Objective:	Notification and exclusion. Prevent contaminant from impacting sensitive area at Lower fish hatchery slough.
Implementation:	Clark Fork flow direction is to the west. Secure upstream end of boom River Right to steel post. Secure downstream end of boom River Left to steel post.
Site Safety Note:	Complete Job Safety Analysis.
Staging Area:	No staging area. Gravel boat launch. Pint Lane boat launch is at site.
Field Notes:	• Nearby private boat launch. • Only accessible by boat • 4WD Access: **NO** • Seasonal Access Only: **YES** • Locked Gate: **NO**
Resources Targeted:	Threatened and Endangered Species, Reservoir, Wetland
Watercourse:	Clark Fork: gradient is low; substrate is gravel; approx. width is 858 ft.; approx. depth is 10 to 20 feet

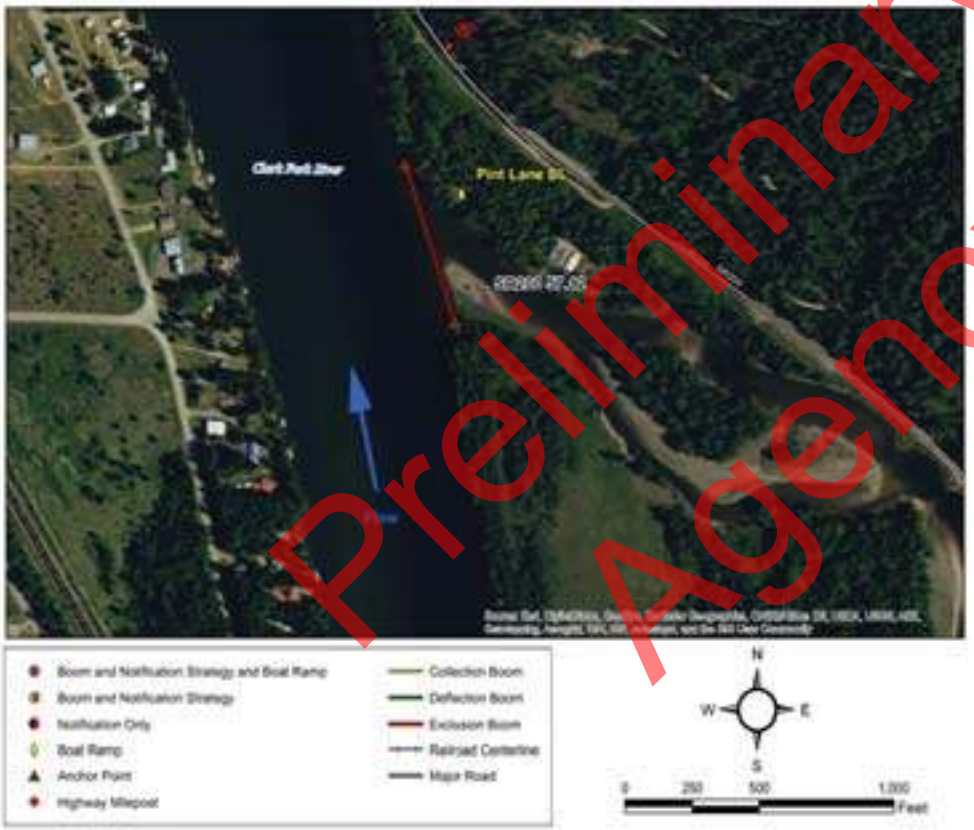

Suggested Equipment	
Quantity	Description
250 ft.	Curtain Boom Tow Bridles
As Appropriate	
300 ft.	Polypropylene Line
6	Steel Post Anchors
As Appropriate	Post pounder, shovels, knife, wood saw
None	In Water Anchors
As Appropriate	PFD work vests/rubber boots
As Appropriate	Throw bags, first aid kit
Jet boat/raft needed for strategy implementation?	Y

Suggested Personnel	
Quantity	Title (Function)
1	Booming Team Leader
1	Safety Representative
2 / 0	Haz-Mat Tech (Field Worker) / 1st Responder (Traffic Flagger)
1 / 1	Haz-Mat Tech (Boat Operator) / Haz-Mat Tech (Swiftwater)

Preliminary Draft for Agency Review

Nearest Cache: Cabinet Gorge Dam (6.2 miles)
Second Cache: Sandpoint (28.9 miles)

Nearest Address: 57140 Highway 200
Clark Fork ID 83811

Site-Specific Points of Contact

Site Access -

Sandpoint, Idaho
1. Head north on US-2 E/N Fifth Ave toward Alder St - 1.0 mi
2. Continue onto ID-200 - 25.5 mi
57140 Idaho-200, Clark Fork, Idaho

Preliminary Draft for Agency Review

Lower fish hatchery slough from down River looking east

None

Preliminary Draft for Agency Review

Site Lat Long:	48.105616 -116.143659 (http://www.google.com/maps/place/48.105616,-116.143659)
Strategy Objective:	Notification and deflection away from shoreline.
Implementation:	Clark Fork flow direction is to the west. Deflect contaminant moving downstream away from shoreline at Upper fish hatchery slough diversion. Secure upstream end of boom River Right to steel post. Secure downstream end of boom Midstream to buoy. Notify private land owner.
Site Safety Note:	Complete Job Safety Analysis.
Staging Area:	No staging area. No boat launch facilities. Private boat launch is 0.2 miles away.
Field Notes:	• Contact Royce Anderson 2082661177 • 4WD Access: **NO** • Seasonal Access Only: **YES** • Locked Gate: **NO**
Resources Targeted:	Threatened and Endangered Species, Reservoir, Wetland
Watercourse:	Clark Fork: gradient is low; substrate is gravel; approx. width is 750 ft.; approx. depth is over 20 feet

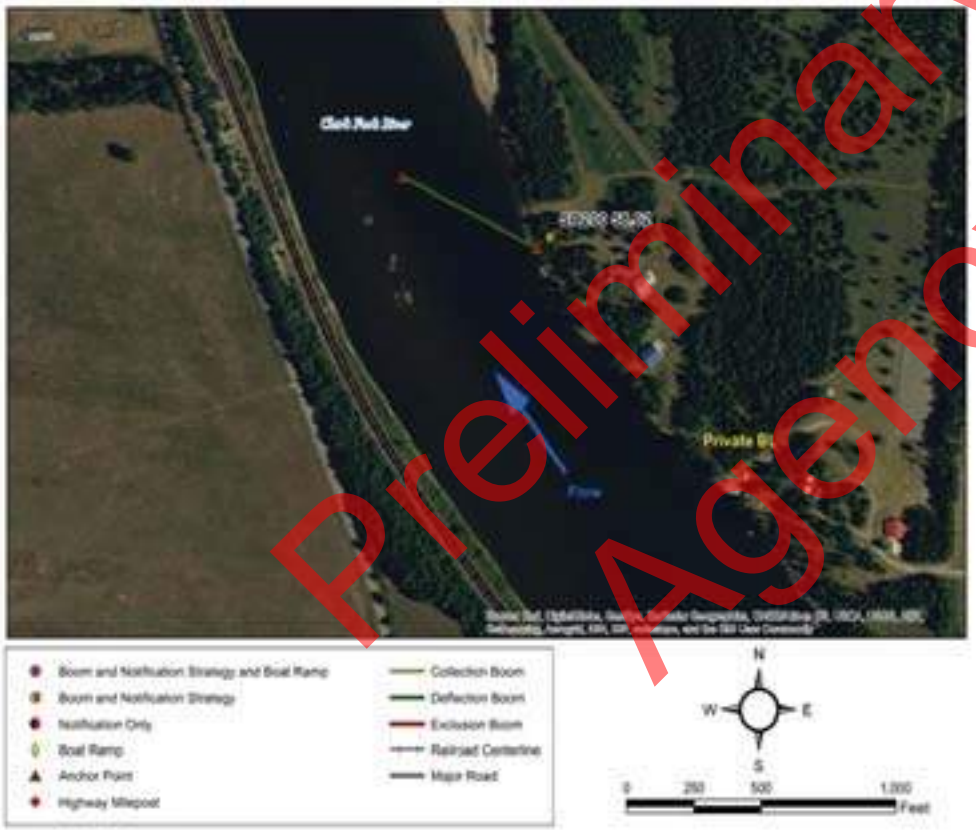

Suggested Equipment	
Quantity	Description
800 ft.	Curtain Boom Tow Bridles
As Appropriate	
1000 ft.	Polypropylene Line
4	Steel Post Anchors
As Appropriate	Post pounder, shovels, knife, wood saw
1	In Water Anchors
As Appropriate	PFD work vests/rubber boots
As Appropriate	Throw bags, first aid kit
Jet boat/raft needed for strategy implementation?	Y

Suggested Personnel	
Quantity	Title (Function)
1	Booming Team Leader
1	Safety Representative
2 / 0	Haz-Mat Tech (Field Worker) / 1st Responder (Traffic Flagger)
1 / 1	Haz-Mat Tech (Boat Operator) / Haz-Mat Tech (Swiftwater)

Preliminary Draft for Agency Review

Nearest Cache: Cabinet Gorge Dam (11.4 miles)
Second Cache: Sandpoint (30.5 miles)

Nearest Address: 58344 Highway 200
Clark Fork ID 83811

Site-Specific Points of Contact

Royce Anderson, land owner (208) 266-1177

Site Access -

Sandpoint, Idaho
1. Head north on US-2 E/N Fifth Ave toward Alder St - 1.0 mi
2. Continue onto ID-200 - 28.7 mi
3. Turn right when possible for river access, access is by un-named two track to river
Upper fish hatchery slough diversion

Preliminary Draft for Agency Review

Looking down river at deflection site

None

Preliminary Draft for Agency Review

Site Lat Long:	48.09251 -116.096934 (http://www.google.com/maps/place/48.09251,-116.096934)
Strategy Objective:	Notification and contaminant collection and recovery.
Implementation:	Clark Fork flow direction is to the west. Deploy collection boom and initiate contaminant recovery at Clark Fork River Access. Secure upstream end of boom River Left to steel post. Secure downstream end of boom Midstream to buoy. Secure upstream end of second boom Midstream to buoy. Secure downstream end of second boom River Left to steel post. Vacuum truck access is good. Notify Avista Utilities.
Site Safety Note:	Complete Job Safety Analysis.
Staging Area:	On site staging is medium. Gravel parking lot on right with a concrete boat launch. Clark Fork River Access boat launch is at site.
Field Notes:	• Boat launch is locked. Contact Avista for access 406-847-1280. • 4WD Access: **NO** • Seasonal Access Only: **NO** • Locked Gate: **NO**
Resources Targeted:	Recreation, Reservoir, Threatened and Endangered Species
Watercourse:	Clark Fork: gradient is low; substrate is gravel; approx. width is 492 ft.; approx. depth is over 20 feet; fast moving

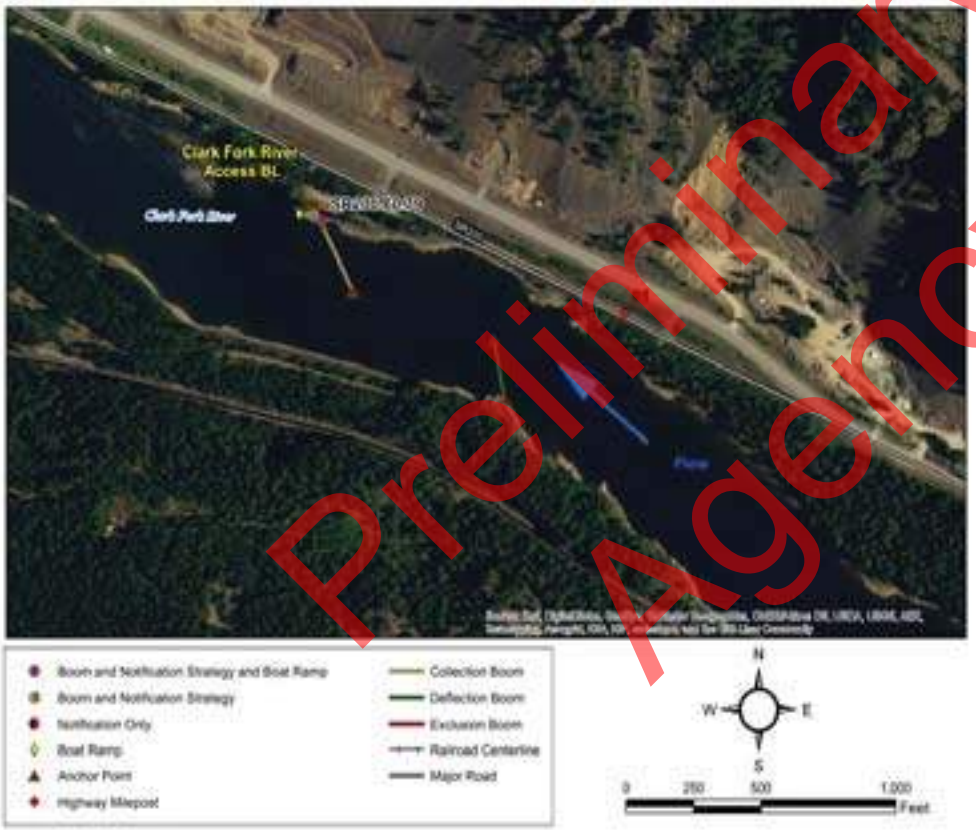

Suggested Equipment	
Quantity	Description
550 ft.	Curtain Boom Tow Bridles
As Appropriate	
700 ft.	Polypropylene Line
8	Steel Post Anchors
As Appropriate	Post pounder, shovels, knife, wood saw
2	In Water Anchors
As Appropriate	PFD work vests/rubber boots
As Appropriate	Throw bags, first aid kit
Jet boat/raft needed for strategy implementation?	Y

Suggested Personnel	
Quantity	Title (Function)
1	Booming Team Leader
1	Safety Representative
3 / 0	Haz-Mat Tech (Field Worker) / 1st Responder (Traffic Flagger)
1 / 1	Haz-Mat Tech (Boat Operator) / Haz-Mat Tech (Swiftwater)

Preliminary Draft for Agency Review

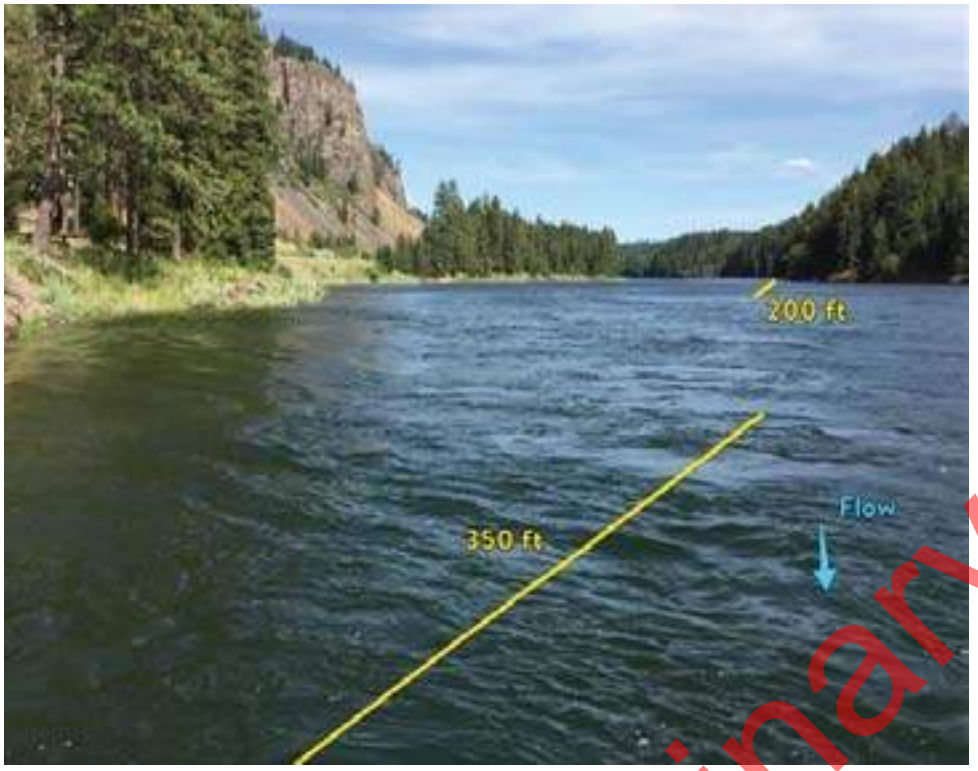

Nearest Cache: Cabinet Gorge Dam (2.5 miles)
Second Cache: Sandpoint (32.5 miles)

Nearest Address: 60238 Idaho 200
Clark Fork, Idaho

Site-Specific Points of Contact

Site Access -

Sandpoint, Idaho
1. Head north on US-2 E/N Fifth Ave toward Alder St - 1.0 mi
2. Continue onto ID-200 - 27.8 mi
60238 Idaho 200, Clark Fork, Idaho

Preliminary Draft for Agency Review

Looking upstream from collection site

Staging area looking west

Preliminary Draft for Agency Review

Site Lat Long:	48.086624 -116.07978 (http://www.google.com/maps/place/48.086624,-116.07978)
Strategy Objective:	Notification and contaminant collection and recovery.
Implementation:	Clark Fork flow direction is to the west. Deploy collection boom and initiate contaminant recovery at Cabinet Gorge Fish Hatchery. Secure upstream end of boom River Right to tree. Secure downstream end of boom Midstream to buoy. Secure upstream end of second boom Midstream to buoy. Secure downstream end of second boom River Left to steel post. Vacuum truck access is good. Notify Avista fish hatchery.
Site Safety Note:	Complete Job Safety Analysis.
Staging Area:	On site staging is large. Large parking and staging area on fish hatchery road adjacent to boat ramp. Gravel boat launch.
Field Notes:	• Monitoring equipment in the water at collection point. May need to be moved during spill containment efforts. • 4WD Access: **NO** • Seasonal Access Only: **NO** • Locked Gate: **NO**
Resources Targeted:	Critical bull trout habitat, fish hatchery release area, Clark Fork River delta, downstream municipal and irrigation water supplies, recreational use, wildlife habitat
Watercourse:	Clark Fork: gradient is low; substrate is gravel; approx. width is 450 ft.; approx. depth is 10 to 20 feet; slow moving

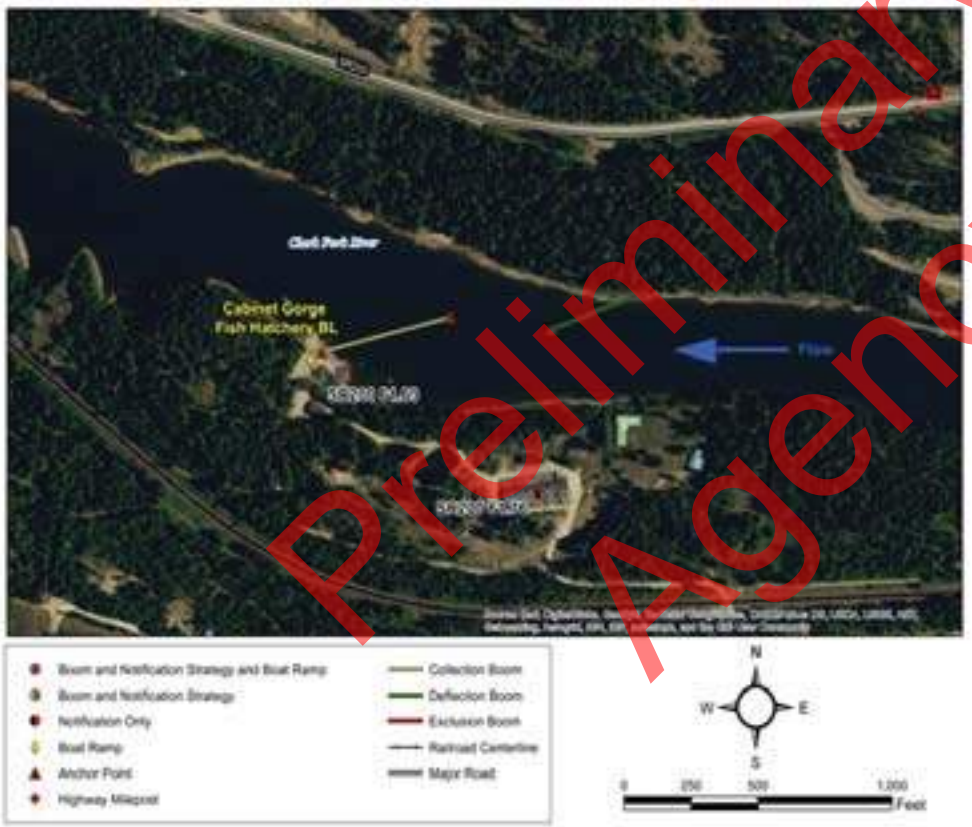

Suggested Equipment	
Quantity	Description
900 ft.	Curtain Boom Tow Bridles
As Appropriate	
1150 ft.	Polypropylene Line
5	Steel Post Anchors
As Appropriate	Post pounder, shovels, knife, wood saw
4	In Water Anchors
As Appropriate	PFD work vests/rubber boots
As Appropriate	Throw bags, first aid kit
Jet boat/raft needed for strategy implementation?	Y

Suggested Personnel	
Quantity	Title (Function)
1	Booming Team Leader
1	Safety Representative
3 / 0	Haz-Mat Tech (Field Worker) / 1st Responder (Traffic Flagger)
1 / 1	Haz-Mat Tech (Boat Operator) / Haz-Mat Tech (Swiftwater)

Preliminary Draft for Agency Review

Nearest Cache: Cabinet Gorge Dam (10.9 miles)
Second Cache: Sandpoint (35.4 miles)

Nearest Address: 220 Hatchery Rd
Clark Fork ID 83811

Site-Specific Points of Contact

Tim Swant, Hatchery Manager (406) 847-1282

Site Access -

Sandpoint, Idaho
1. Head north on US-2 E/N Fifth Ave toward Alder St -
2. Continue onto ID-200 - 25.4 mi
3. Turn right onto Stephen St - 0.3 mi
4. Turn left onto S River Rd - 0.7 mi
5. Continue onto Johnson Creek Rd - 295 ft
6. Continue straight onto River Rd - 6.5 mi
7. Turn left onto Cabinet Gorge Rd - 0.6 mi
8. Turn right to stay on Cabinet Gorge Rd - 0.4 mi
Cabinet Gorge Hatchery

Preliminary Draft for Agency Review

View of boat ramp and collection point looking upstream.

View looking upstream from boat ramp and collection point towards river right anchor.

Preliminary Draft for Agency Review

Site Lat Long:	48.087117 -116.05216 (http://www.google.com/maps/place/48.087117,-116.05216)
Strategy Objective:	Notification and contaminant collection and recovery.
Implementation:	Clark Fork flow direction is to the west. Deploy collection boom and initiate recovery at Cabinet Gorge Dam. Secure upstream end of boom River Right to tree. Secure downstream end of boom River Left to steel post. Vacuum truck access is good. Notify Avista Cabinet Gorge Dam.
Site Safety Note:	Complete Job Safety Analysis.
Staging Area:	On site staging is large. Equipment and vehicle parking area adjacent to rail crossing. Gravel boat launch. Cabinet Gorge Dam Upstream boat launch is at site.
Field Notes:	• Locked gate on road controlled by Avista 406-847-1280. • 4WD Access: **NO** • Seasonal Access Only: **NO** • Locked Gate: **YES**
Resources Targeted:	Cabinet gorge dam, critical bull trout habitat, Clark Fork River delta, downstream municipal and irrigation water supplies, recreational use, wildlife habitat
Watercourse:	Clark Fork: gradient is low; substrate is gravel; approx. width is 400 ft.; approx. depth is over 20 feet; slow moving

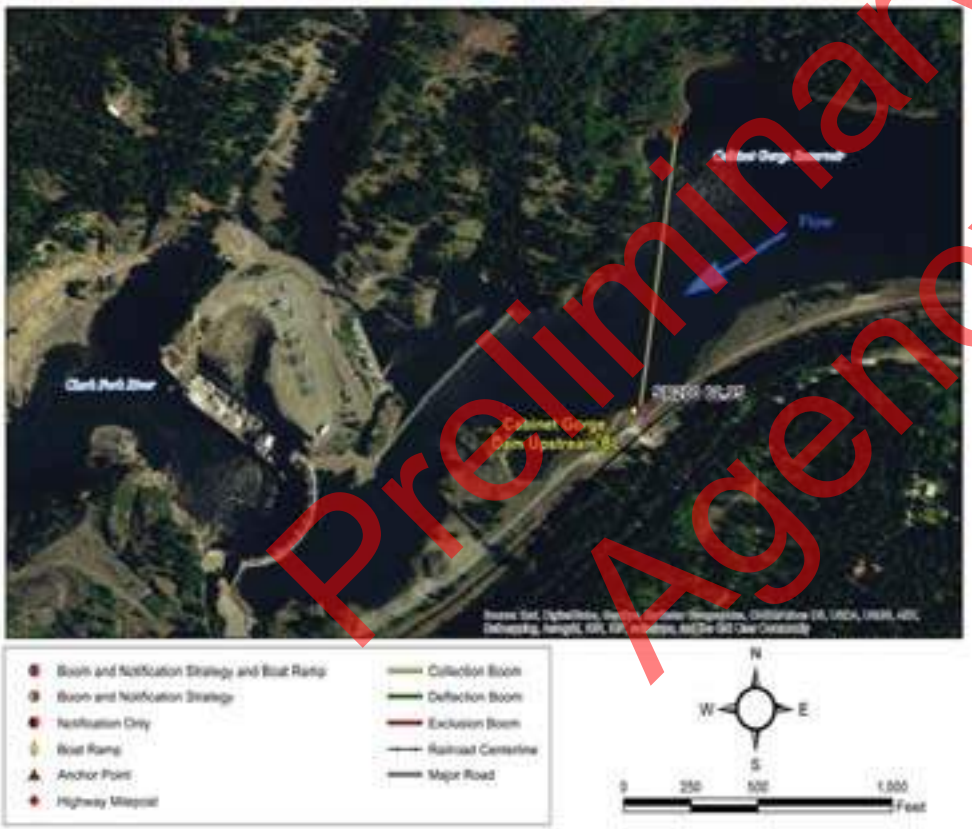

Suggested Equipment	
Quantity	Description
1300 ft.	Curtain Boom Tow Bridles
As Appropriate	
1700 ft.	Polypropylene Line
8	Steel Post Anchors
As Appropriate	Post pounder, shovels, knife, wood saw
2	In Water Anchors
As Appropriate	PFD work vests/rubber boots
As Appropriate	Throw bags, first aid kit
Jet boat/raft needed for strategy implementation?	Y

Suggested Personnel	
Quantity	Title (Function)
1	Booming Team Leader
1	Safety Representative
3 / 0	Haz-Mat Tech (Field Worker) / 1st Responder (Traffic Flagger)
1 / 1	Haz-Mat Tech (Boat Operator) / Haz-Mat Tech (Swiftwater)

Preliminary Draft for Agency Review

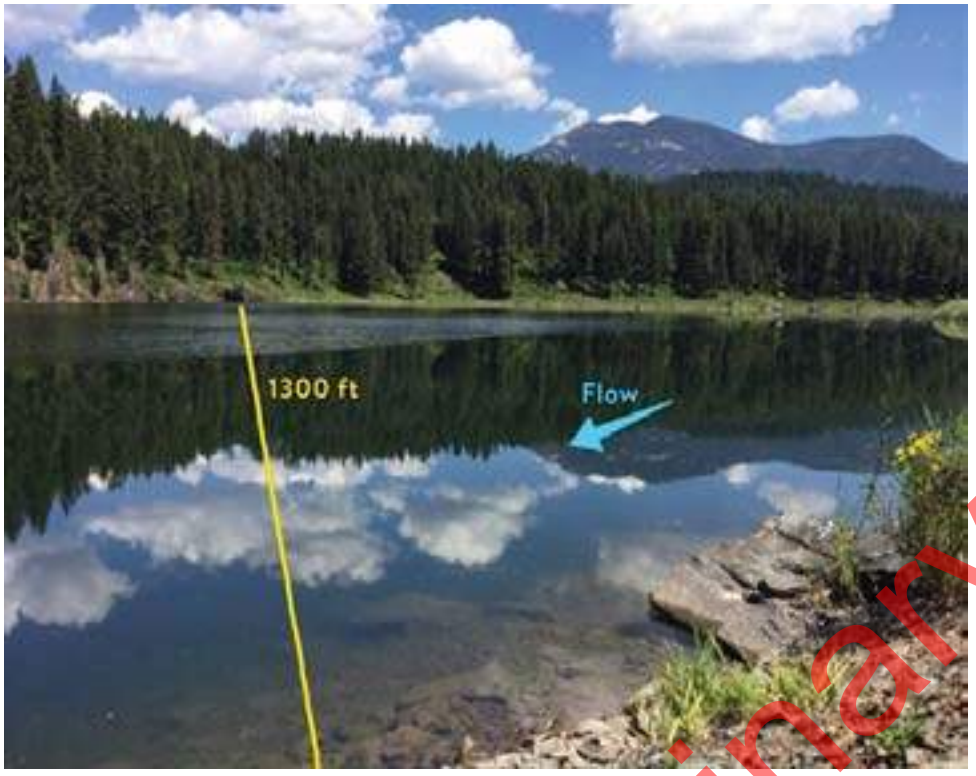

Nearest Cache: Cabinet Gorge Dam (9.5 miles)
Second Cache: Sandpoint (36.7 miles)

Nearest Address: 2305 Cabinet Gorge Rd
Clark Fork ID 83811

Site-Specific Points of Contact

Avista Utilities Cabinet Gorge Dam (Control Room) (208) 266-1531

Site Access -

Sandpoint, Idaho
1. Head north on US-2 E/N Fifth Ave toward Alder St - 1.0 mi
2. Continue onto ID-200 - 25.4 mi
3. Turn right onto Stephen St - 0.3 mi
4. Turn left onto S River Rd - 0.7 mi
5. Continue onto Johnson Creek Rd - 295 ft
6. Continue straight onto River Rd - 6.5 mi
7. Turn left onto Cabinet Gorge Rd - 0.6 mi
8. Turn right to stay on Cabinet Gorge Rd - 0.7 mi

Destination will be on the left

Preliminary Draft for Agency Review

View looking upstream from collection point to river right anchor.

View looking downstream at collection point and river left anchor on observation deck.

Preliminary Draft for Agency Review

This page intentionally blank

Preliminary Draft for Agency Review

Cardboard
Sector 7

Preliminary Draft for Agency Review

This page intentionally blank

Preliminary Draft for Agency Review

Sector & Map	Site ID & Highway Milepost	Railroad Milepost	Site Name	Accessible by boat at Low Water?	Nearest Boat Ramp or Staging Area
Sector 7A Sagle (South)	US95 461.32	BNSF Spokane 16.94	Cocolalla Creek Trestle	No	US95 463.62
	US95 463.82	BNSF Spokane 14.22	Cocolalla Creek Outlet	No	US95 473.87
	US95 463.95	BNSF Spokane 14.07	Cocolalla Loop Rd Bridge	No	US95 473.87
	US95 465.11	BNSF Spokane 13.43	Round Lake	Yes	US95 465.12
Sector 7B Sagle (North)	US95 471.08	BNSF Spokane 6.7	Bottle Bay Bridge	No	US95 473.87
	US95 472.98	MRL4 4.89	Sourdough Point Water Intake	Yes	US95 472.98

Preliminary Draft for Agency Review

Sector 7A Sagle - South

Go Back to Regional Map

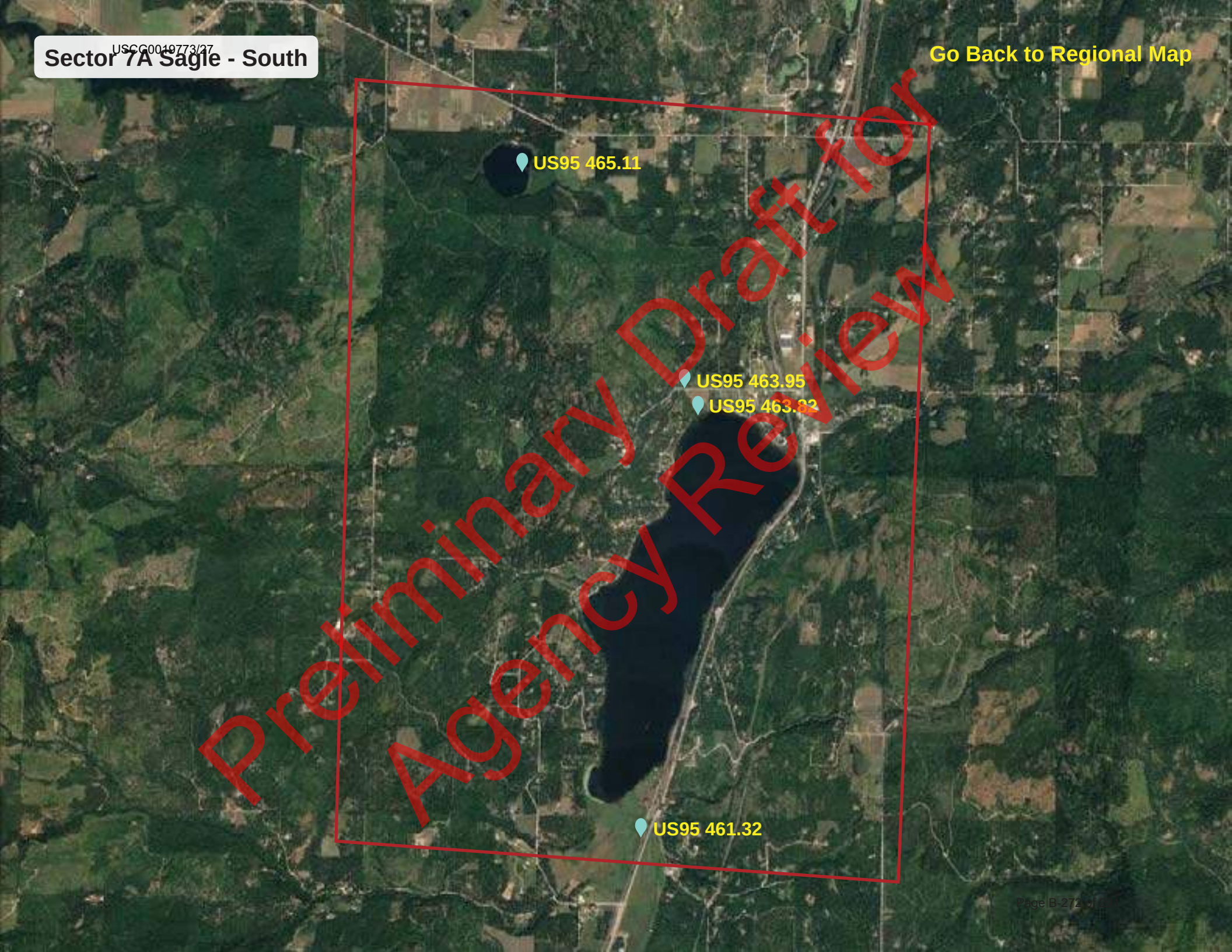

Preliminary Draft for Agency Review

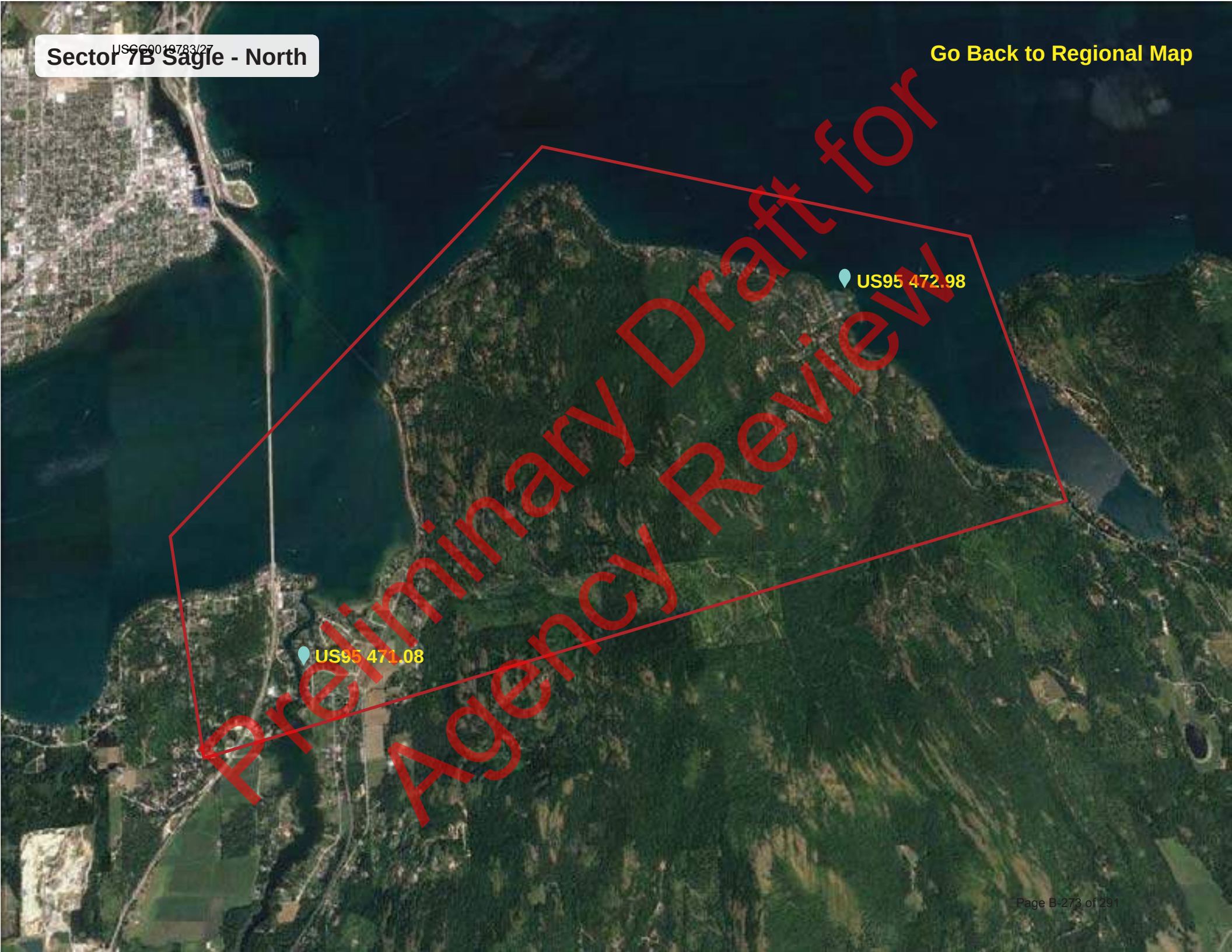
Sector 7B Sagle - North
USCG0019783/27
Go Back to Regional Map
US95 472.98
US95 471.08
Preliminary Draft for Agency Review

Site Lat Long:	48.106531 -116.618517 (http://www.google.com/maps/place/48.106531,-116.618517)
Strategy Objective:	Notification and contaminant collection and recovery of contaminated material prior to its entrance into Lake Cocolalla
Implementation:	River flow direction is to the west. Deploy collection boom and initiate contaminant recovery at Cocolalla Creek railroad bridge. Secure upstream end of boom River Right to steel post. Secure downstream end of boom River Left to steel post. Vacuum truck access is good.
Site Safety Note:	Complete Job Safety Analysis.
Staging Area:	On site staging is medium. Small parking area adjacent to railroad on west side of track for vehicles. No boat launch facilities. Lake Cocolalla boat launch is 2.9 miles away.
Field Notes:	• Stream may be intermittent and frozen during winter. • 4WD Access: **NO** • Seasonal Access Only: **NO** • Locked Gate: **NO**
Resources Targeted:	Lake Cocolalla, fish habitat, recreation
Watercourse:	Gradient is low; substrate is gravel; approx. width is 33 ft.; approx. depth is 1 to 5 feet; channelized; slow moving

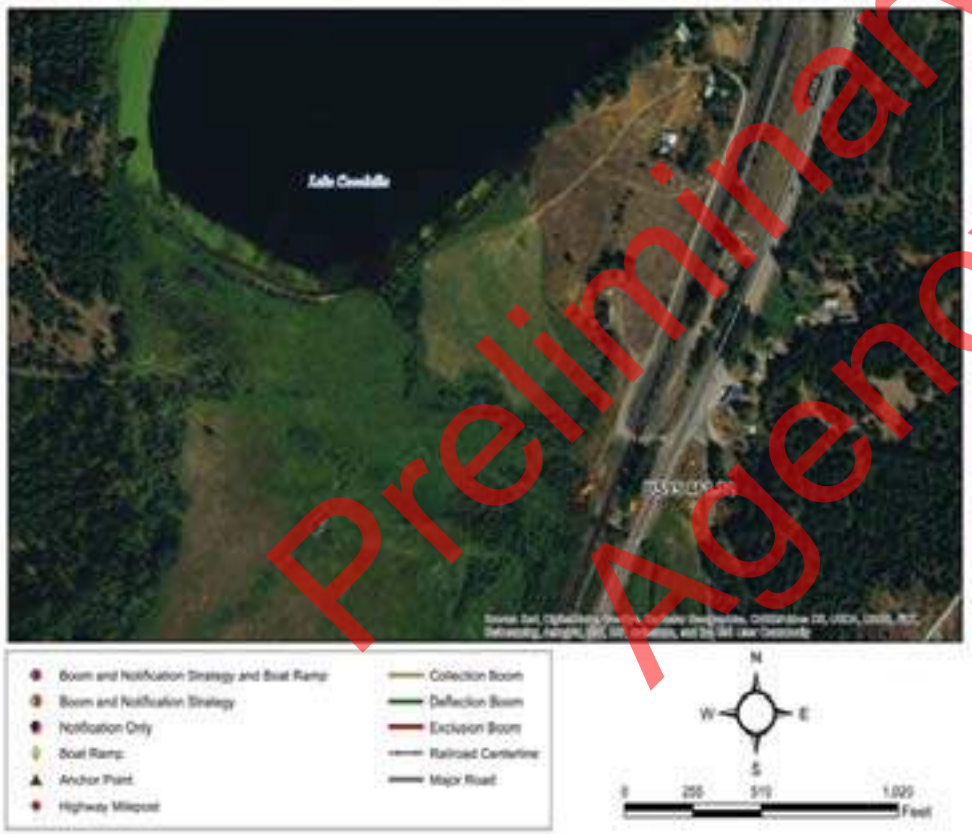

Suggested Equipment	
Quantity	Description
50 ft.	Curtain Boom Tow Bridles
As Appropriate	
	Polypropylene Line
6	Steel Post Anchors
As Appropriate	Post pounder, shovels, knife, wood saw
None	In Water Anchors
As Appropriate	PFD work vests/rubber boots
As Appropriate	Throw bags, first aid kit
Jet boat/raft needed for strategy implementation?	N

Suggested Personnel	
Quantity	Title (Function)
1	Booming Team Leader
1	Safety Representative
2 / 1	Haz-Mat Tech (Field Worker) / 1st Responder (Traffic Flagger)
0 / 0	Haz-Mat Tech (Boat Operator) / Haz-Mat Tech (Swiftwater)

Preliminary Draft for Agency Review

Nearest Cache: Sandpoint (13.5 miles)
Second Cache: Bonners (45.8 miles)

Nearest Address: 11 Rd Southside School
Cocolalla ID 83813

Site-Specific Points of Contact

Site Access -

Sandpoint, Idaho
1. Head south on N Fifth Ave Toward Cedar St - 0.2 mi
2. Turn left onto Pine St - 0.3 mi
3. Turn right onto S 1st Ave - 0.2 mi
4. Turn left onto E Superior St - 0.5 mi
5. Merge onto US - 95 S - 15.4 mi

Preliminary Draft for Agency Review

View of the train bridge and parking area.

None

Preliminary Draft for Agency Review

Site Lat Long:	48.141084 -116.613382 (http://www.google.com/maps/place/48.141084,-116.613382)
Strategy Objective:	Notification and exclusion. Prevent contaminant from impacting sensitive area at Cocolalla Creek outlet.
Implementation:	River flow direction is to the north. Secure upstream end of boom River Right to steel post. Secure downstream end of boom River Left to steel post. Vacuum truck access is poor.
Site Safety Note:	Complete Job Safety Analysis.
Staging Area:	No staging area. No boat launch facilities. Sandy Beach boat launch is 1.7 miles away.
Field Notes:	• Access by boat for photos and precise measurements. • 4WD Access: **NO** • Seasonal Access Only: **NO** • Locked Gate: **NO**
Resources Targeted:	Cocolalla Creek, Round Lake State Park downstream, fish habitat, wetlands, municipal and irrigation water supply, recreation
Watercourse:	Gradient is low; substrate is sand; approx. width is 150 ft.; approx. depth is 5 to 10 feet; braided channels; shoals

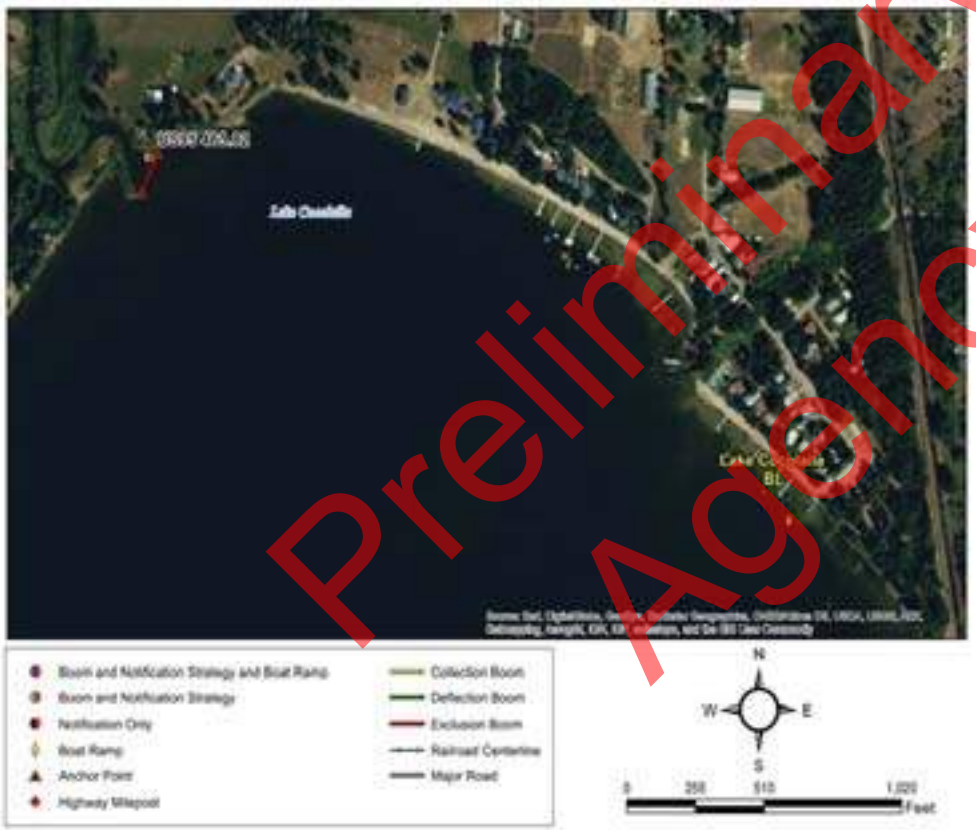

Suggested Equipment	
Quantity	Description
200 ft.	Curtain Boom Tow Bridles
As Appropriate	
250 ft.	Polypropylene Line
6	Steel Post Anchors
As Appropriate	Post pounder, shovels, knife, wood saw
None	In Water Anchors
As Appropriate	PFD work vests/rubber boots
As Appropriate	Throw bags, first aid kit
Jet boat/raft needed for strategy implementation?	Y

Suggested Personnel	
Quantity	Title (Function)
1	Booming Team Leader
1	Safety Representative
2 / 0	Haz-Mat Tech (Field Worker) / 1st Responder (Traffic Flagger)
1 / 1	Haz-Mat Tech (Boat Operator) / Haz-Mat Tech (Swiftwater)

Preliminary Draft for Agency Review

Nearest Cache: Sandpoint (11.4 miles)
Second Cache: Bonners (43.7 miles)

Nearest Address: 398 Sportsmans Access

Site-Specific Points of Contact

Site Access -

Sandpoint, Idaho
1. Head south on N Fifth Ave Toward Cedar St - 0.2 mi
2. Turn left onto Pine St - 0.3 mi
3. Turn right onto S 1st Ave - 0.2 mi
4. Turn left onto E Superior St - 0.5 mi
5. Merge onto US - 95 S - 9.5 mi
6. Turn right onto Cocolalla Loop Rd - 0.5 mi
7. Turn left onto road directly after N Beach Rd for best access.

Cocolalla Creek Outlet, Cocolalla, Idaho

Preliminary Draft for Agency Review

Site Lat Long:	48.143234 -116.614958 (http://www.google.com/maps/place/48.143234,-116.614958)
Strategy Objective:	Notification and contaminant collection and recovery.
Implementation:	River flow direction is to the north. Deploy collection boom and initiate contaminant recovery at Cocolalla Loop Rd Bridge. Secure upstream end of boom River Right to steel post. Secure downstream end of boom River Right to steel post. Vacuum truck access is good.
Site Safety Note:	Complete Job Safety Analysis.
Staging Area:	On site staging is small. Limited parking along narrow road shoulder adjacent to bridge. No boat launch facilities. Sandy Beach boat launch is 1.4 miles away.
Field Notes:	• 4WD Access: **NO** • Seasonal Access Only: **YES** • Locked Gate: **NO**
Resources Targeted:	Cocolalla Creek, fish habitat, wetlands, Round Lake State Park downstream, municipal and irrigation water supplies, recreation
Watercourse:	Gradient is low; substrate is sand; approx. width is 30 ft.; approx. depth is 1 to 5 feet; braided channels; shoals; slow moving

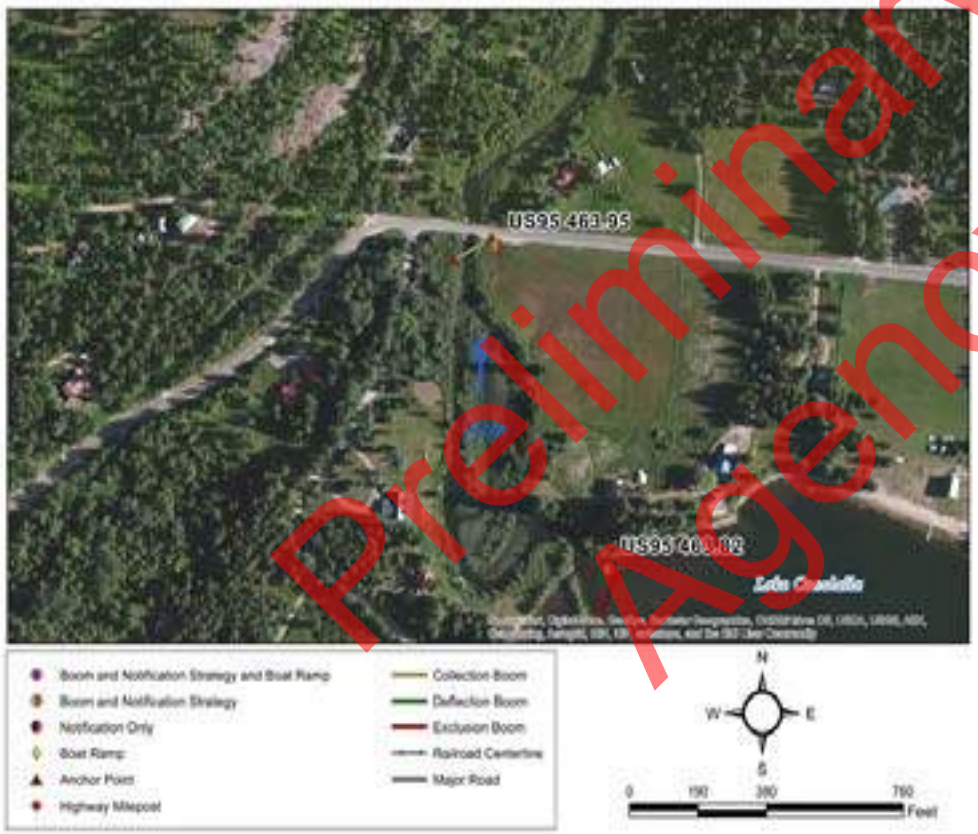

Suggested Equipment	
Quantity	Description
50 ft.	Curtain Boom Tow Bridles
As Appropriate	
50 ft.	Polypropylene Line
6	Steel Post Anchors
As Appropriate	Post pounder, shovels, knife, wood saw
None	In Water Anchors
As Appropriate	PFD work vests/rubber boots
As Appropriate	Throw bags, first aid kit
Jet boat/raft needed for strategy implementation?	N

Suggested Personnel	
Quantity	Title (Function)
1	Booming Team Leader
1	Safety Representative
2 / 0	Haz-Mat Tech (Field Worker) / 1st Responder (Traffic Flagger)
0 / 0	Haz-Mat Tech (Boat Operator) / Haz-Mat Tech (Swiftwater)

Preliminary Draft for Agency Review

Nearest Cache: Sandpoint (11.4 miles)
Second Cache: Bonners (43.7 miles)

Nearest Address: 524-698 Cocolalla Lp
Cocolalla ID 83813

Site-Specific Points of Contact

Site Access -

Sandpoint, Idaho
1. Head south on N Fifth Ave Toward Cedar St - 0.2 mi
2. Turn left onto Pine St - 0.3 mi
3. Turn right onto S 1st Ave - 0.2 mi
4. Turn left onto E Superior St - 0.5 mi
5. Merge onto US - 95 S - 9.5 mi
6. Turn right onto Cocolalla Loop Rd - 0.7 mi

Preliminary Draft for Agency Review

Upstream side of bridge showing creek and culvert.

Looking east across bridge at parking area.

Preliminary Draft for Agency Review

Site Lat Long:	48.162092 -116.637139 (http://www.google.com/maps/place/48.162092,-116.637139)
Strategy Objective:	Notification and exclusion. Prevent contaminant from impacting sensitive area at Round Lake.
Implementation:	Secure upstream end of boom East Shoreline to steel post. Secure downstream end of boom East Shoreline to steel post. Vacuum truck access is good.
Site Safety Note:	Complete Job Safety Analysis.
Staging Area:	On site staging is medium. Medium sized parking area adjacent to boat ramp with additional parking for vehicles uphill from the ramp. Gravel boat launch. Round Lake boat launch is at the site.
Field Notes:	• Exclusion boom across outlet of Cocolalla Creek where it enters lake. No gas powered motors allowed on around lake without permit. • 4WD Access: **NO** • Seasonal Access Only: **NO** • Locked Gate: **NO**
Resources Targeted:	Municipal water intake
Watercourse:	Round Lake State Park, fish habitat, recreation

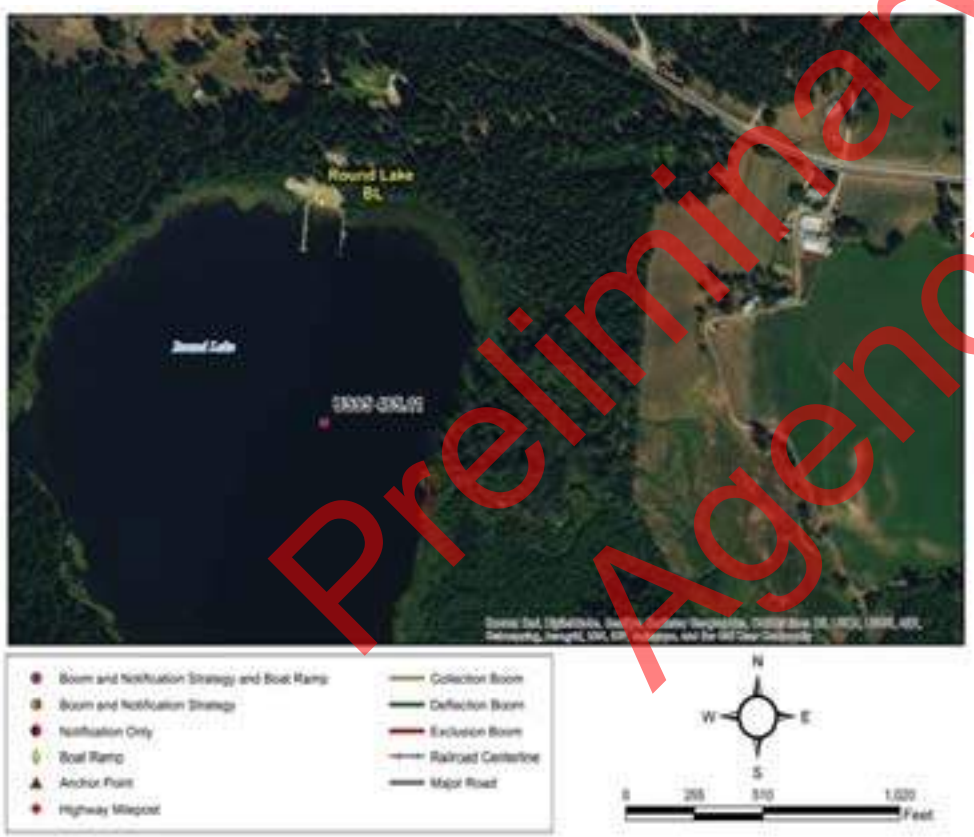

Suggested Equipment	
Quantity	Description
200 ft.	Curtain Boom Tow Bridles
As Appropriate	
	Polypropylene Line
6	Steel Post Anchors
As Appropriate	Post pounder, shovels, knife, wood saw
None	In Water Anchors
As Appropriate	PFD work vests/rubber boots
As Appropriate	Throw bags, first aid kit
Jet boat/raft needed for strategy implementation?	Y

Suggested Personnel	
Quantity	Title (Function)
1	Booming Team Leader
1	Safety Representative
2 / 1	Haz-Mat Tech (Field Worker) / 1st Responder (Traffic Flagger)
1 / 1	Haz-Mat Tech (Boat Operator) / Haz-Mat Tech (Swiftwater)

Preliminary Draft for Agency Review

Nearest Cache: Sandpoint (11.3 miles)
Second Cache: Bonners (43.6 miles)

Nearest Address: 1440 Dufort Rd
Sagle ID 83860

Site-Specific Points of Contact

Site Access -

Sandpoint, Idaho
1. Head south on N Fifth Ave Toward Cedar St - 0.2 mi
2. Turn left onto Pine St - 0.3 mi
3. Turn right onto S 1st Ave - 0.2 mi
4. Turn left onto E Superior St - 0.5 mi
5. Merge onto US - 95 S - 8.0 mi
6. Turn right onto Dufort Rd - 1.9 mi
7. Turn left toward Mirror Lake Rd - 0.1 mi
8. Continue onto Mirror Lake Rd - 213 ft

Mirror Lake Rd, Westmond, Idaho

Preliminary Draft for Agency Review

Looking southeast toward inlet.

View of parking area from boat ramp.

Preliminary Draft for Agency Review

Site Lat Long:	48.230107 -116.536618 (http://www.google.com/maps/place/48.230107,-116.536618)
Strategy Objective:	Notification and exclusion. Prevent contaminant from impacting sensitive area at Bottle Bay Bridge.
Implementation:	River flow direction is to the north. Secure upstream end of boom River Right to steel post. Secure downstream end of boom River Left to steel post. Vacuum truck access is good.
Site Safety Note:	Complete Job Safety Analysis.
Staging Area:	On site staging is small. Limited parking along road on narrow shoulder with adjacent gravel boat ramp. Boat ramp best suited for smaller sized boats and trailers. Gravel boat launch. Bottle Bay Bridge boat launch is 0.1 miles away.
Field Notes:	• Boat ramp may require 4WD during periods of snow or rain. • 4WD Access: **NO** • Seasonal Access Only: **NO** • Locked Gate: **NO**
Resources Targeted:	Lake Pend Orielle, municipal water resources, fish habitat, wetlands, recreation
Watercourse:	Gradient is low; substrate is mud; approx. width is 75 ft.; approx. depth is 5 to 10 feet; channelized; slow moving

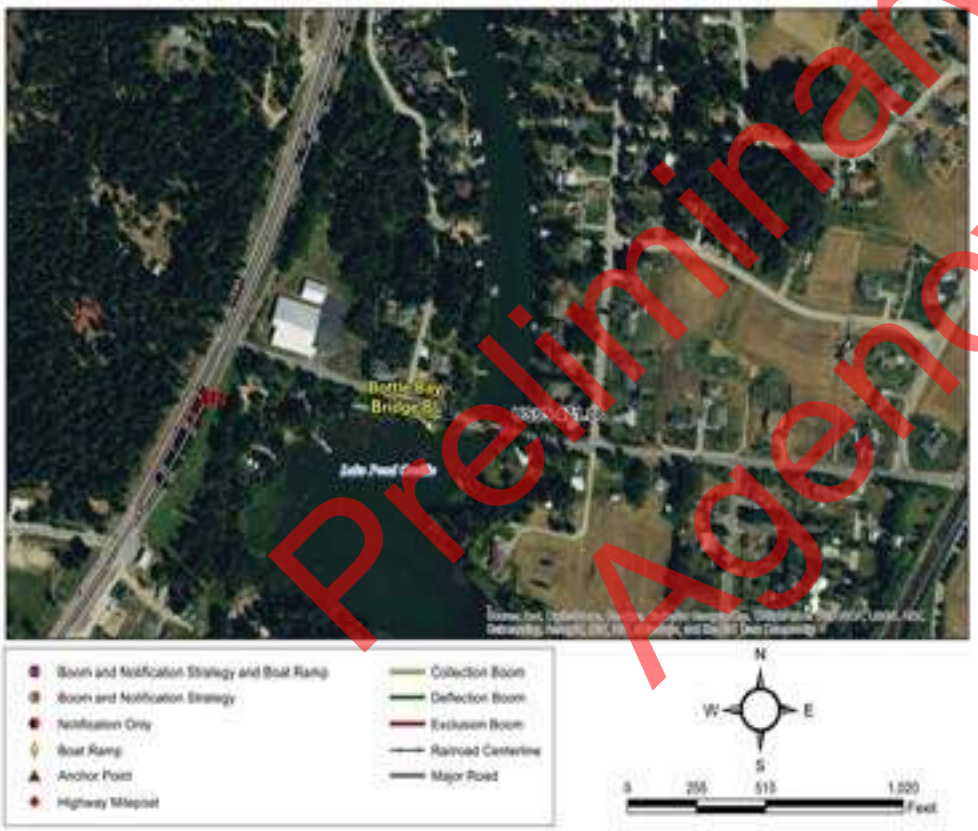

Suggested Equipment	
Quantity	Description
100 ft.	Curtain Boom Tow Bridles
As Appropriate	
150 ft.	Polypropylene Line
6	Steel Post Anchors
As Appropriate	Post pounder, shovels, knife, wood saw
None	In Water Anchors
As Appropriate	PFD work vests/rubber boots
As Appropriate	Throw bags, first aid kit
Jet boat/raft needed for strategy implementation?	N

Suggested Personnel	
Quantity	Title (Function)
1	Booming Team Leader
1	Safety Representative
2 / 1	Haz-Mat Tech (Field Worker) / 1st Responder (Traffic Flagger)
0 / 0	Haz-Mat Tech (Boat Operator) / Haz-Mat Tech (Swiftwater)

Preliminary Draft for Agency Review

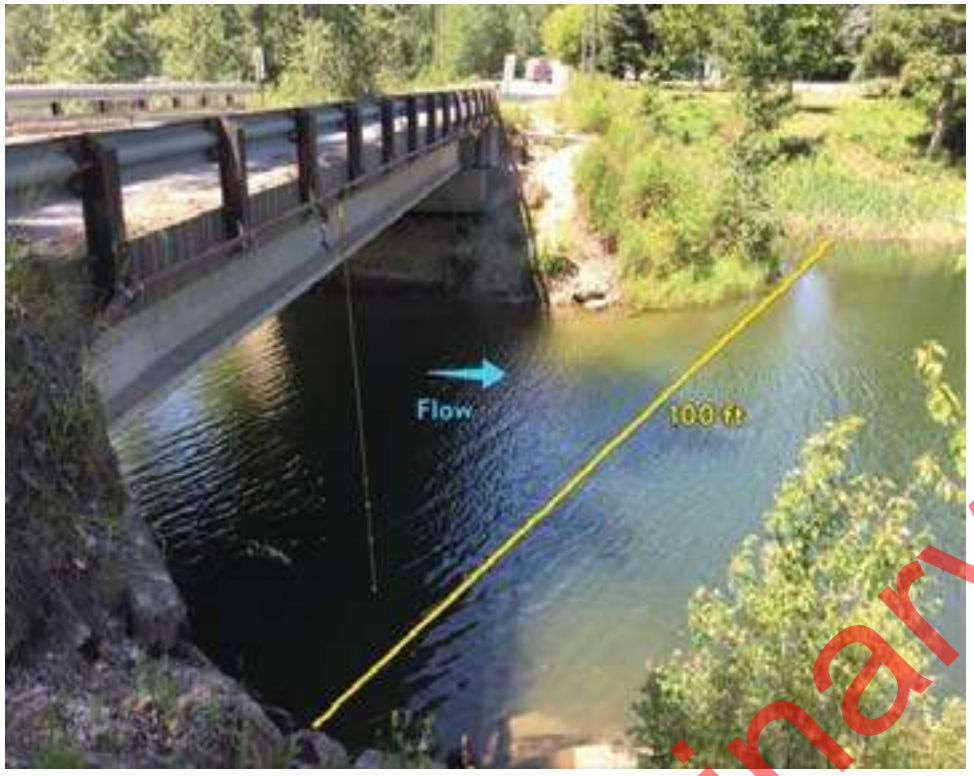

Nearest Cache: Sandpoint (4.0 miles)
Second Cache: Bonners (36.3 miles)

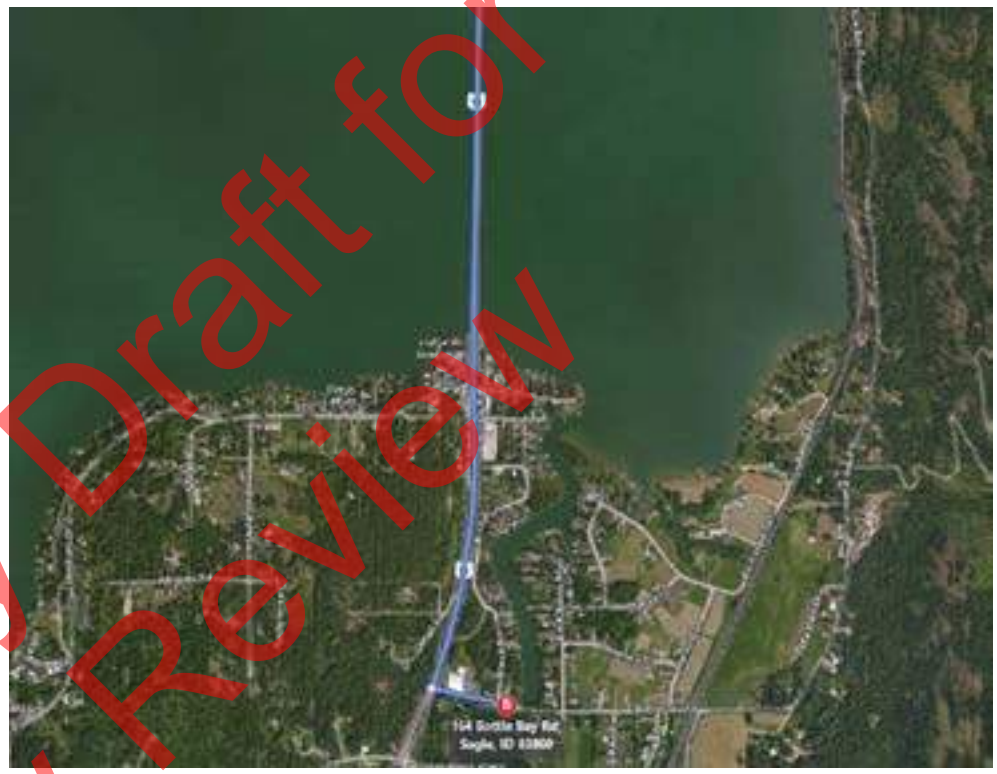

Nearest Address: 200 Bottle Bay Rd
Sagle ID 83860

Site-Specific Points of Contact

Site Access -

Sandpoint, Idaho
1. Head south on N Fifth Ave toward Cedar St - 0.2 mi
2. Turn left onto Pine St - 0.3 mi
3. Turn right onto S 1st Ave - 0.2 mi
4. Turn left onto E Superior St - 0.5 mi
5. Merge onto US-95 S - 2.5 mi
6. Turn left onto Bottle Bay Rd - 0.1 mi

Preliminary Draft for Agency Review

Collection site on north side of bridge.

Bridge and narrow shoulders for parking.

Preliminary Draft for Agency Review

Site Lat Long:	48.258104 -116.468924 (http://www.google.com/maps/place/48.258104,-116.468924)
Strategy Objective:	Notification and exclusion. Prevent contaminant from impacting sensitive area at Sourdough Point water intake.
Implementation:	Secure upstream end of boom South Shoreline to steel post. Extend boom to the north and into the lake. Secure to a buoy and secure downstream end of boom to South Shoreline to steel post. Notify Sourdough Point water intake.
Site Safety Note:	Complete Job Safety Analysis.
Staging Area:	On site staging is large. Large private boat launch with big parking lot. Concrete boat launch. Sourdough Point boat launch is 0.3 miles away.
Field Notes:	• Contact Water Treatment Operator: Robert Hanson 208-265-4270 • 4WD Access: **NO** • Seasonal Access Only: **NO** • Locked Gate: **NO**
Resources Targeted:	Wildlife Habitat, Threatened and Endangered Species, Recreational Use, Reservoir or Lake
Watercourse:	Lake Pend Oreille; substrate is mud; approx. depth is greater than 20 feet; slow moving; shoals

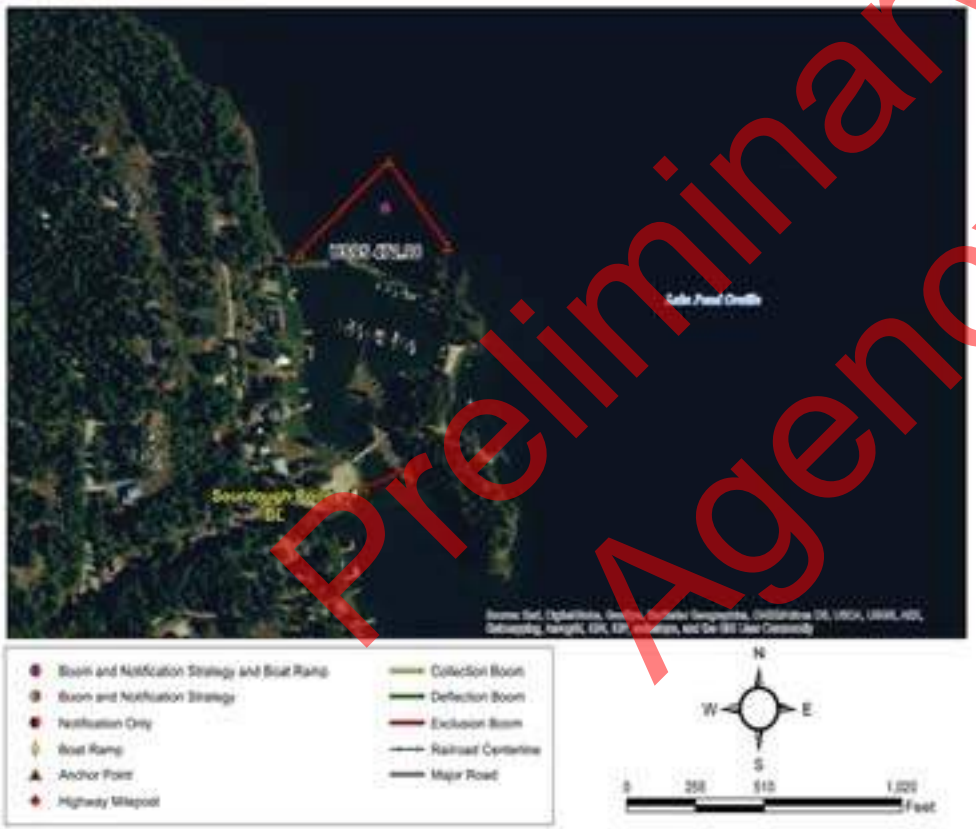

Suggested Equipment	
Quantity	Description
1200 ft.	Curtain Boom Tow Bridles
As Appropriate	
1500 ft.	Polypropylene Line
6	Steel Post Anchors
As Appropriate	Post pounder, shovels, knife, wood saw
1	In Water Anchors
As Appropriate	PFD work vests/rubber boots
As Appropriate	Throw bags, first aid kit
Jet boat/raft needed for strategy implementation?	Y

Suggested Personnel	
Quantity	Title (Function)
1	Booming Team Leader
1	Safety Representative
3 / 0	Haz-Mat Tech (Field Worker) / 1st Responder (Traffic Flagger)
1 / 1	Haz-Mat Tech (Boat Operator) / Haz-Mat Tech (Swiftwater)

Preliminary Draft for Agency Review

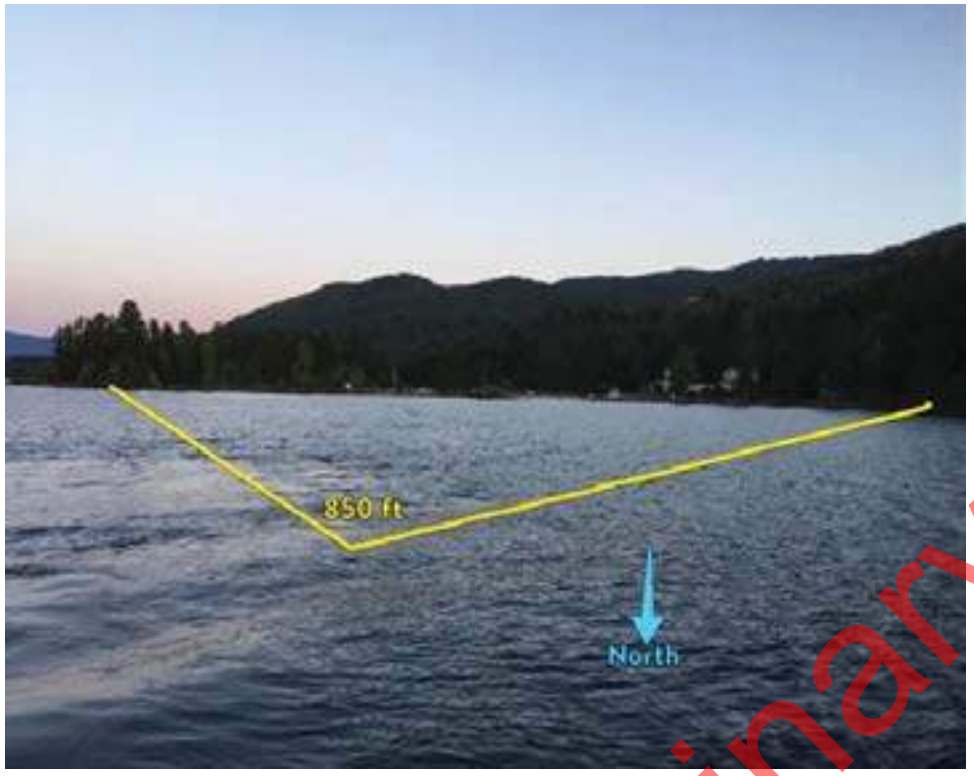

Nearest Cache: Sandpoint (10.3 miles)
Second Cache: Bonners (42.7 miles)

Nearest Address: 81 W Shoreline Ln
Sagle ID 83860

Site-Specific Points of Contact

Sourdough Point Water Intake (208) 265-4270

Site Access -

Sandpoint, Idaho
1. Head south on N Fifth Ave toward Cedar St - 0.2 mi
2. Turn left onto Pine St - 0.3 mi
3. Turn right onto S 1st Ave - 0.2 mi
4. Turn left onto E Superior St - 0.5 mi
5. Merge onto US - 95 S - 2.5 mi
6. Turn left onto Bottle Bay Rd - 6.2 mi
7. Turn left onto Sourdough Ln - 0.2 mi
Destination will be on the right

Preliminary Draft for Agency Review

Close-up on the Sourdough Point water intake, facing south.

Looking at the Sourdough Point water intake, facing southeast.

Preliminary Draft for Agency Review

Appendix C Oil Spill Scenario Travel Time Analysis

Preliminary Draft for Agency Review

Appendix C

Oil Spill Scenario Time of Travel Analysis - Clark Fork River at Cabinet Gorge Dam

This analysis employs the Incident Command Tool for Protecting Drinking Water (ICWater) to examine river travel time in the event of an oil spill on the Clark Fork River. Several scenarios were modeled to assess time of travel at different river discharge rates and oil spill volumes. All scenarios listed in Tables C-1 and C-2 begin with a spill located at 48.086 N and 116.058 W, just below Cabinet Gorge Dam (Figure C-1). A separate scenario involving a spill location further downstream is illustrated in Figure C-2 and discussed below.

Crude oil is a complex mixture of numerous petrochemical compounds, the proportions of which can vary widely. ICWater requires input of a specific chemical agent to model the transport of a pollutant spilled in a river. Since benzene is the primary compound of concern in Bakken crude, it was used as a proxy for bulk crude oil in these scenarios. The composition of Bakken crude narrowly ranges, so two different benzene contents were examined: 0.2 wt% (Table C-1) and 0.5 wt% (Table C-2). However, both of these are likely conservative values as the U.S. Environmental Protection Agency (EPA) recently reported benzene content of 0.14 wt% for a sample collected and analyzed in 2014. All scenarios assume a reported density of 6.79 pounds per gallon (42.5° API) for Bakken crude (EPA, 2014).

Reported travel times indicate the amount of time it takes following the spill for benzene concentrations over the level of concern (0.005 milligrams per liter) to reach the distributary channels of the Clark Fork River Delta, near the currently installed debris booms (Figure C-1). In other words, travel times show how long before the dilute but harmful leading edge of the spill will reach the delta.

Preliminary Draft for Agency Review

Figure C-1: Example Model Output

Figure C-1 provides an example model output showing 12 hours of travel time following a 45,000-gallon spill of 0.2 wt% crude at 25,000 cfs. This scenario illustrates a spill that is similar in size to one that occurred near Mosier, Oregon, on June 3, 2016, at a discharge exemplary of moderate to high flow rates for the Clark Fork River.

Preliminary Draft for Agency Review

Table C-1: Travel times for Bakken crude oil spill with 0.2 wt% benzene

		Size of Spill (gallons)			
		30,000	45,000	100,000	300,000
Discharge (cfs)	100,000	1 hr 51 min	1 hr 26 min	1 hr 6 min	<1 hr
	75,000	1 hr 56 min	1 hr 33 min	1 hr 16 min	1 hr 4 min
	50,000	2 hr 16 min	1 hr 58 min	1 hr 41 min	1 hr 26 min
	25,000	2 hr 41 min	2 hr 31 min	2 hr 16 min	2 hr 3 min
	10,000	3 hr 41 min	3 hr 33 min	3 hr 22 min	3 hr 8 min
	5,000	4 hr 44 min	4 hr 38 min	4 hr 27 min	4 hr 14 min

Table C-2: Travel times for Bakken crude oil spill with 0.5 wt% benzene

		Size of Spill (gallons)			
		30,000	45,000	100,000	300,000
Discharge (cfs)	100,000	1 hr 7 min	< 1 hr	< 1 hr	< 1 hr
	75,000	1 hr 21 min	1 hr 14 min	< 1 hr	< 1 hr
	50,000	1 hr 47 min	1 hr 39 min	1 hr 29 min	1 hr 18 min
	25,000	2 hr 21 min	2 hr 14 min	2 hr 0 min	1 hr 54 min
	10,000	3 hr 26 min	3 hr 19 min	3 hr 11 min	3 hr 0 min
	5,000	4 hr 30 min	4 hr 26 min	4 hr 16 min	4 hr 5 min

At several points along the Clark Fork River below Cabinet Gorge Dam, railroad tracks run within 90 ft or less of the river bank. One of these points is approximately 1.4 miles below the dam and 6 miles above the delta. In the event of a derailment and crude oil spill at this location, comparable in volume to the June 2016 spill in Mosier, Oregon, during moderately high flow of 25,000 cfs (~3.2 ft/sec), it would take approximately 2 hours for the leading edge of the spill to reach the delta. At a lower flow of 10,000 cfs (~2.5 ft/sec), leading edge travel time would be approximately 2 hours and 57 minutes (Figure C-2).

To compare flows used in ICWater model scenarios with real historical flow values, Figure C-3 displays daily discharge for the last 10 years at the USGS/Avista Utilities stream gauge station downstream of the Cabinet Gorge Dam (location shown on Figure C-1), and Table C-3 displays monthly mean discharge for water years 1996–2016.

Figure C-3 Clark Fork River daily discharge recorded at the USGS/Avista Utilities stream gauge station located downstream from the Cabinet Gorge Dam. Location of the stream gauge relative to the dam is illustrated in Figure C-1.

Preliminary Draft for Agency Review

Figure C-2: Location of Possible Oil Spill for Modeling

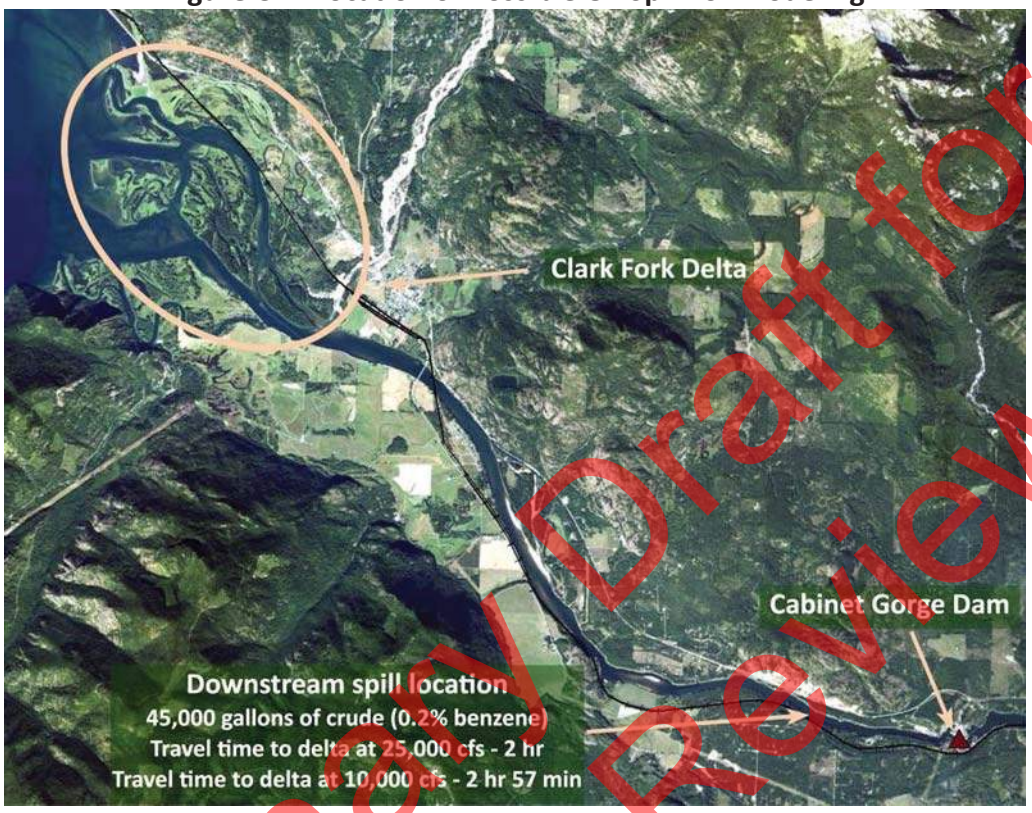

Figure C-3: Clark Fork River Daily Discharge

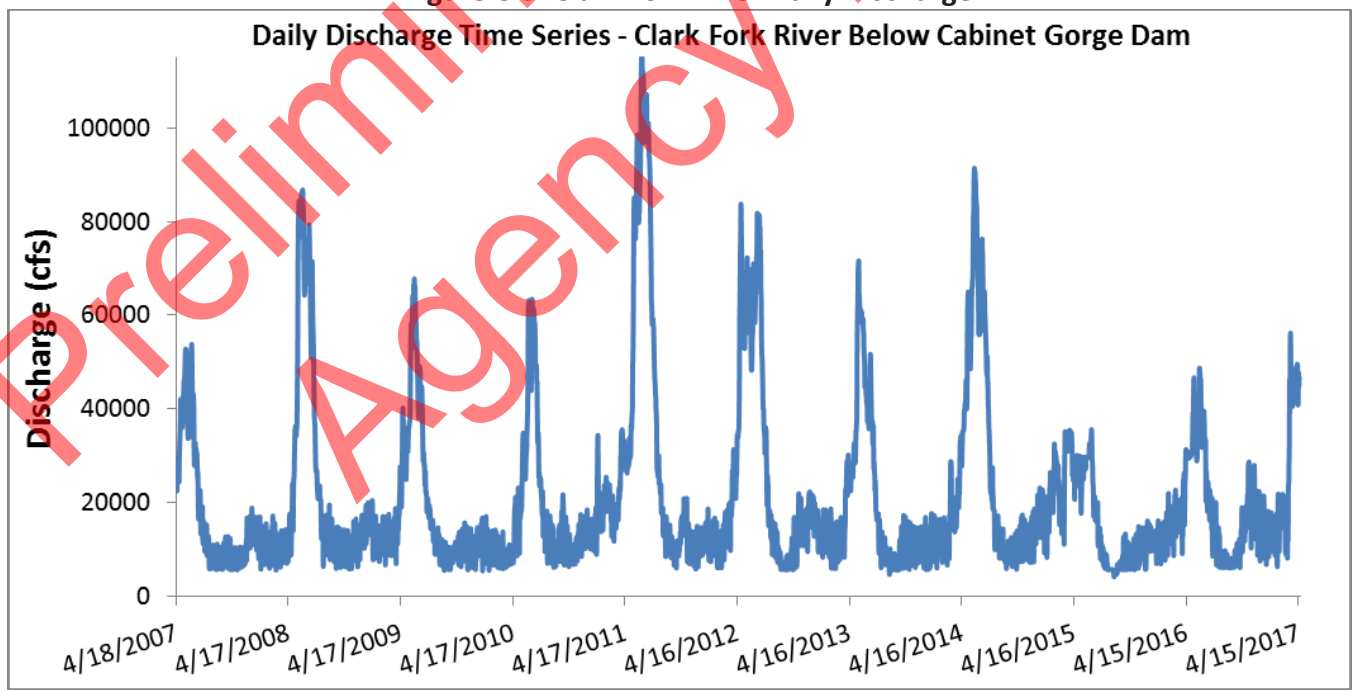

Preliminary Draft for Agency Review

Table C-3: Clark Fork River Monthly Mean Discharge Values

	Jan	Feb	Mar	Apr	May	Jun	Jul	Aug	Sep	Oct	Nov	Dec
1995	n.d.	n.d.	n.d.	n.d.	n.d.	n.d.	n.d.	n.d.	n.d.	12,290	21,370	34,250
1996	23,140	37,550	35,880	49,130	59,580	73,030	30,170	17,490	11,610	11,020	15,590	15,890
1997	19,530	19,170	24,080	37,410	93,000	96,050	34,910	19,080	13,440	13,200	18,670	17,480
1998	14,050	9,450	11,460	17,770	35,850	46,170	30,300	14,410	10,980	9,773	15,120	12,500
1999	13,060	11,370	16,550	22,660	38,320	60,140	30,450	14,330	9,828	9,194	17,250	19,740
2000	15,130	12,230	14,070	28,910	38,710	36,310	18,860	9,738	7,853	9,927	11,800	12,320
2001	10,990	6,156	6,916	8,844	26,990	23,630	11,890	7,046	5,818	6,334	7,065	8,779
2002	12,450	13,030	13,200	24,630	40,200	79,180	34,360	13,720	9,692	7,002	10,320	13,070
2003	7,309	11,810	13,080	26,770	38,440	44,670	16,160	8,585	6,101	6,254	12,200	12,530
2004	9,234	10,520	13,600	17,460	33,840	35,010	20,180	11,960	14,110	12,100	11,050	15,940
2005	13,280	12,320	8,114	15,840	38,970	45,880	19,550	10,680	6,443	11,140	12,710	12,200
2006	13,910	16,580	13,920	31,520	60,000	52,310	18,800	7,513	7,331	8,529	17,560	14,020
2007	13,740	12,790	21,650	27,480	42,310	35,850	15,100	8,334	8,397	8,498	7,973	14,340
2008	11,590	11,200	10,970	11,810	52,830	72,700	35,720	14,300	12,310	11,300	11,090	14,050
2009	14,720	12,790	12,960	22,390	43,990	48,170	20,150	11,250	8,402	10,010	11,420	10,250
2010	11,380	11,280	8,310	11,450	23,020	54,400	27,040	12,380	13,140	10,580	11,760	14,100
2011	17,330	20,680	18,360	30,270	63,820	101,100	63,090	19,030	10,820	13,460	12,420	11,850
2012	13,040	10,820	15,950	39,880	61,190	68,530	35,380	11,700	6,919	10,380	15,680	17,930
2013	13,870	13,430	12,520	25,010	52,340	42,930	18,580	8,633	7,052	11,300	10,830	10,510
2014	12,330	12,260	17,480	31,520	65,510	66,930	34,050	12,010	8,922	11,440	12,350	16,720
2015	18,070	25,770	26,700	30,080	27,570	25,380	10,220	5,550	7,125	7,706	10,900	11,900
2016	11,520	14,130	17,620	26,190	38,580	29,550	14,130	7,035	7,661	n.d.	n.d.	n.d.

Preliminary Draft for Agency Review

Appendix D Summary of Equipment Trailer Contents

Equipment	AVT	BNF1	BNF2	BNF SNP	RRT 1
Containment Boom (total length shown in ft)	1,716	3,800	1,000	1,000	1,000
Boom Vane	0	1	0	1	0
Boom Deflectors	2	6	0	6	0
Absorbents					
Absorbent Track Pad Roll	0	1	0	1	1,000 pads
Oil Absorbent Boom Bale	0	5	0	5	
Oil Absorbent Pad Bale	8	4	0	4	
Sweep Boom; 5"	8	6	0	6	0
Skimmer, Hydraulic Powered	0	1	0	1	0
Skimmer, Shovel Head	0	1	0	1	0
Diesel Power Pack for Skimmer	0	1	0	1	0
2000-Watt Generator	1	1	0	1	0
Oil Compatible Collapsible Tank	0	1	0	1	0
Helicopter Cargo Net	0	2	0	2	0
Oil Spill PPE	no	yes	no	yes	no
River Safety PPE	no	yes	no	yes	no

Notes:

AVT: Avista 14-Foot Enclosed Bumper Pull (Cabinet Gorge Dam)

BNF1: BNSF M2 24-Foot Enclosed Double Axel Bumper Pull (Bonners Ferry)

BNF2: (*supplements BNF1*): BNSF M3 Enclosed Double Axel Gooseneck (Bonners Ferry)

BNF SNP: BNSF M2 24-Foot Enclosed Double Axel Bumper Pull (Sandpoint)

RRT1: Idaho Office of Emergency Management Regional Response Team 1 (Coeur d'Alene)

Preliminary Draft for Agency Review

This page intentionally left blank for correct double-sided printing.

Preliminary Draft for Agency Review

Appendix E High-Occupancy Facilities

The Lake Pend Oreille region has numerous high-occupancy facilities that are located very close to the rail lines and major highways. These facilities include schools, one hospital, several nursing homes, and several large employers. The table below lists the facilities with their primary contact phone number. The figures following show their location.

A nearby hazardous material spill may require prompt shelter-in-place warning or evacuation of these facilities.

The facilities on this list were included based on a subjective estimate of the number of people present. The list generally includes the following types of facilities:

- Public and private schools
- Apartments
- Dense mobile home and recreational vehicle parks with limited access
- Hospitals
- Nursing homes
- Large hotels
- Assisted-living facilities
- Facilities that employ many people
- Campgrounds close to railroad tracks
- Parks that host large gatherings (e.g., Sandpoint Music Festival at War Memorial Field)

Churches and small parks were excluded from the list.

The following figures include several 0.5-mile radius circles depicting approximate areas that may need evacuation in the event of a hazardous material train accident. The circles are centered on active rail lines. While the location of any accident cannot be predicted, these circles provide a general indication of the size of area needing evacuation.

The table below organizes the facilities geographically. Figures are provided following the table for areas with numerous high-occupancy facilities.

For more information, see the Bonner County Evacuation and Reception Plan, June 1, 2010, Bonner County Board of Commissioners, Bonner County Idaho.

Preliminary Draft for Agency Review

Name	Address	Facility Type	Phone (Area Code 208)	Map Figure
Community : Clark Fork				
Clark Fork High School	121 E 4th Ave, Clark Fork	School / High School	255-7177	—
Lightning Creek Apartments	120 W 10th Ave, Clark Fork	Living / Apartment	—	—
Trunnell Enterprises RV Park	Hwy 200 From Sandpoint	Recreation / Campground	—	—
Community : East Hope				
Hope Elementary School	255 Hope School Rd, Hope	School / Elementary	264-5681	—
Community : Trestle Creek				
Idaho Country Resort	Along Hwy 200	Recreation / Campground	—	—
Jeb & Margaret's Trailer Haven	12 Mi. E. Of Sandpoint	Recreation / Campground	—	—
Trestle Creek RV Park	42303 Highway 200, Hope	Living / Rv Park	264-5894	—
Community : Kootenai				
Northside School	7881 Colburn-Culver Rd, Sandpoint	School / Elementary	263-2734	—
Community : Ponderay				
Evacuation Circle D				
Beehive Hearthstone Village	402 W 3rd Ave, Kootenai	Living / Assisted Living	—	D
Hotel Ruby	47725 Highway 95 North, Ponderay, Id	Hotel	263-5383	D
Kootenai Elementary School	301 Sprague St, Kootenai	School / Elementary	255-4076	D
Lake Pend Oreille School Dist	901 Triangle Dr, Ponderay	School /	263-2184	D
Mountain View Village	550 Larkspur St, Ponderay	Living / Assisted Living	—	D
Mt Baldy Apartments	835 Kootenai Cutoff Rd, Ponderay	Living / Apartment	—	D
Trinity Assisted Living	100 Humbird St, Kootenai	Living / Assisted Living	—	D
Valentine Apartments	31138 Highway 200, Ponderay	Living / Apartment	—	D
Woodland Crossing Apartments	839 Kootenai Cutoff Rd, Ponderay	Living / Apartment	—	D
Hotel Ruby	477255 Highway 95 N. Ponderay	Hotel	263-5383	—
Community: Sandpoint				

Preliminary Draft for Agency Review

Name	Address	Facility Type	Phone (Area Code 208)	Map Figure
Evacuation Circle A				**A**
Alpine Vista Senior Apartments	1705 Pine Street, Sandpoint	Living / Senior	265-4446	A
Bristlecone Apartments	1510 Pine St, Sandpoint	Living / Apartment	—	A
Forrest Bird Charter School	614 Madison Ave, Sandpoint	School / Charter	—	A
Northwood Terrace Apartments	307 Halley St, Sandpoint	Living / Apartment	—	A
Oak St Apartments	1509 Oak St, Sandpoint	Living / Apartment	—	A
Pend Oreille Manor	1411 W Lake St, Sandpoint	Living / Apartment	—	A
Pine Meadow Apartments	205 Halley St, Sandpoint	Living / Apartment	—	A
Ridley Village 1	950 Ridley Village Rd, Sandpoint	Living / Apartment	—	A
Ridley Village 2	1000 Ridley Village Rd, Sandpoint	Living / Apartment	—	A
Sandpoint High School	410 S Division Ave, Sandpoint	School / High School	—	A
Sandpoint Junior Academy	2255 Pine St, Sandpoint	School / Private	263-3584	A
Sandpoint Middle School	310 S Division Ave, Sandpoint	School / Junior High	265-4169	A
Sandpoint Villas Apartments	1602 Pine St, Sandpoint	Living / Apartment	—	A
Selkirk Ridge Apartments	117 S Lincoln Ave, Sandpoint	Living / Apartment	—	A
Travers Great Northern Park	2016 Pine St, Sandpoint	Recreation / Park	—	A
Valley Vista Care Center	220 S Division Ave, Sandpoint	Living / Assisted Living	265-4514	A
Waldorf School	2007 Sandpoint West Dr, Sandpoint	School / Private	265-2683	A
Evacuation Circle B				**B**
Bridge Assisted Living	1123 N Division Ave, Sandpoint	Living / Assisted Living	263-1524	B
Farmin Stidwell Elementary School	1626 Spruce St, Sandpoint	School / Elementary	—	B
Huckleberry Apartments	1314 Huckleberry Ave, Sandpoint	Living / Apartment	255-5999	B
Lake Pend Oreille High School	1005 N Boyer Ave, Sandpoint	School / High School	263-6121	B and C
Litehouse Foods	1109 N. Ella, Sandpoint	Manufacturing - Food	265-3700	B
Pend Oreille Village	910 N Division Ave, Sandpoint	Living / Apartment	—	B
Quest Aircraft Co	1200 Turbine Dr., Sandpoint	Manufacturing - Airplanes	263-1111	B

Preliminary Draft for Agency Review

Name	Address	Facility Type	Phone (Area Code 208)	Map Figure
Skyline Apartments	1315 Hickory St, Sandpoint	Living / Apartment	—	B
Syringa Estates	1101 N Division Ave, Sandpoint	Living / Apartment	—	B
Evacuation Circle C				**C**
Best Western Edgewater	Follow Signs To Beach	Recreation / Campground	263-2111	C
Bonner General Hospital	520 N 3rd Ave, Sandpoint	Public Services / Hospital	263-1441	C
Courser Apartments	219 Church St, Sandpoint	Living / Apartment	—	C
Driftwood Apartments	720 N 3rd Ave, Sandpoint	Living / Apartment	—	C
Farmin Park	312 Oak St, Sandpoint	Recreation / Park	—	C
Florence St Apartments	324 S Florence Ave, Sandpoint	Living / Apartment	—	C
Florence Street Apartments	324 S Florence Ave, Sandpoint	Living / Apartment	—	C
Lake Pend Oreille High School	1005 N Boyer Ave, Sandpoint	School / High School	263-6121	B and C
La Quinta	415 Cedar St, Sandpoint	Hotel	263-9581	C
Mountain Shadow Suites	320 N Boyer Ave, Sandpoint	Living / Condos	—	C
North Idaho College	12 S. Euclid, Sandpoint	School / Post-Secondary	263-4594	C
Pedersen Apartments	302 Poplar St, Sandpoint	Living / Apartment	—	C
Sandpoint City Beach		Recreation / Park	—	C
Seasons Apartments	424 Sandpoint Ave Sandpoint	Living / Vacation Rental	255-1054	C
Superior St Apt	302 S 2nd Ave, Sandpoint	Living / Apartment	—	C
Villa Apartments	620 Main St, Sandpoint	Living / Apartment	—	C
Washington Elementary	430 S Boyer Ave, Sandpoint	School / Elementary	263-4759	C
Sandpoint: Other High Occupancy Facilities				
Cambridge Square Apartments	1205 Cedar St, Sandpoint	Living / Apartment	—	—
Holiday Inn Express	477326 Highway 95, Ponderay	Business / Motel	255-4500	—
Lakeview Park	607 S Ella Ave, Sandpoint	Recreation / Park	—	—
Luther Park	510 Olive Ave, Sandpoint	Living / Assisted Living	265-3557	—

Preliminary Draft for Agency Review

Name	Address	Facility Type	Phone (Area Code 208)	Map Figure
Ponderosa Apartments	4107 Samuelson Ave, Sandpoint	Living / Apartment	—	—
Sandpoint Christian School	477954 Highway 95, Ponderay	School / Private	265-8624	—
Sandpoint Evergreen Assisted Living	624 S Division Ave, Sandpoint	Living / Assisted Living	265-2354	—
Schweitzer Ranch Senior	4107 Samuelson Ave, Sandpoint	Living / Senior	—	—
War Memorial Field	Sandpoint	Recreation / Community Park	—	—
Community : Dover				
No High Occupancy Facilities			—	—
Community : Sagle				
Country Inn	1 Mi. South Of Sandpoint	Recreation / Campground	—	—
Sagle Elementary	550 Sagle Rd, Sagle	School / Elementary	263-2757	—
Travel America Rv Park	468800 Highway 95 Unit 1, Sagle	Living / Rv Park	—	—
Community : Cocolalla				
Southside Elementary	375 Southside School Rd, Cocolalla	School / Elementary	—	—
Community : Laclede				
Riley Creek Campground	Laclede	Recreation / Campground	—	—
Community : Priest River				
Beardmore East Apartments	382 Harriet St, Priest River	Living / Apartment	—	—
Gregory St Apartments	384 Gregory St Unit 202, Priest River	Living / Apartment	—	—
Lowes Apartments	218 Highway 57, Priest River	Living / Apartment	—	—
Murray Apartments	238 Sherman St, Priest River	Living / Apartment	—	—
Priest River Elementary	231 Harriet St, Priest River	School / Elementary	448-1181	—
Priest River High School	598 Id-57, Priest River ID	SCHOOL / HIGH SCHOOL	448-1211	—
Priest River Jr High School	5709 Highway 2, Priest River	School / Junior High	448-1118	—
Whitaker Apartments	328 Summit Blvd, Priest River	Living / Apartment	—	—
Community : Old Town				

Preliminary Draft for Agency Review

Name	Address	Facility Type	Phone (Area Code 208)	Map Figure
Albeni Cove Campground	Albeni Falls	Recreation / Campground	—	—
Idaho Hill Elementary School	402 E 3rd St S, Oldtown	School / Elementary	437-4227	—
Pend Oreille Valley School	33820 Highway 41, Oldtown	School / Private	—	—
House of the Lord	754 Silver Birch Lane, Oldtown	School / Private	437-2184	—

Preliminary Draft for Agency Review

Preliminary Draft for Agency Review

Preliminary Draft for Agency Review

Preliminary Draft for Agency Review

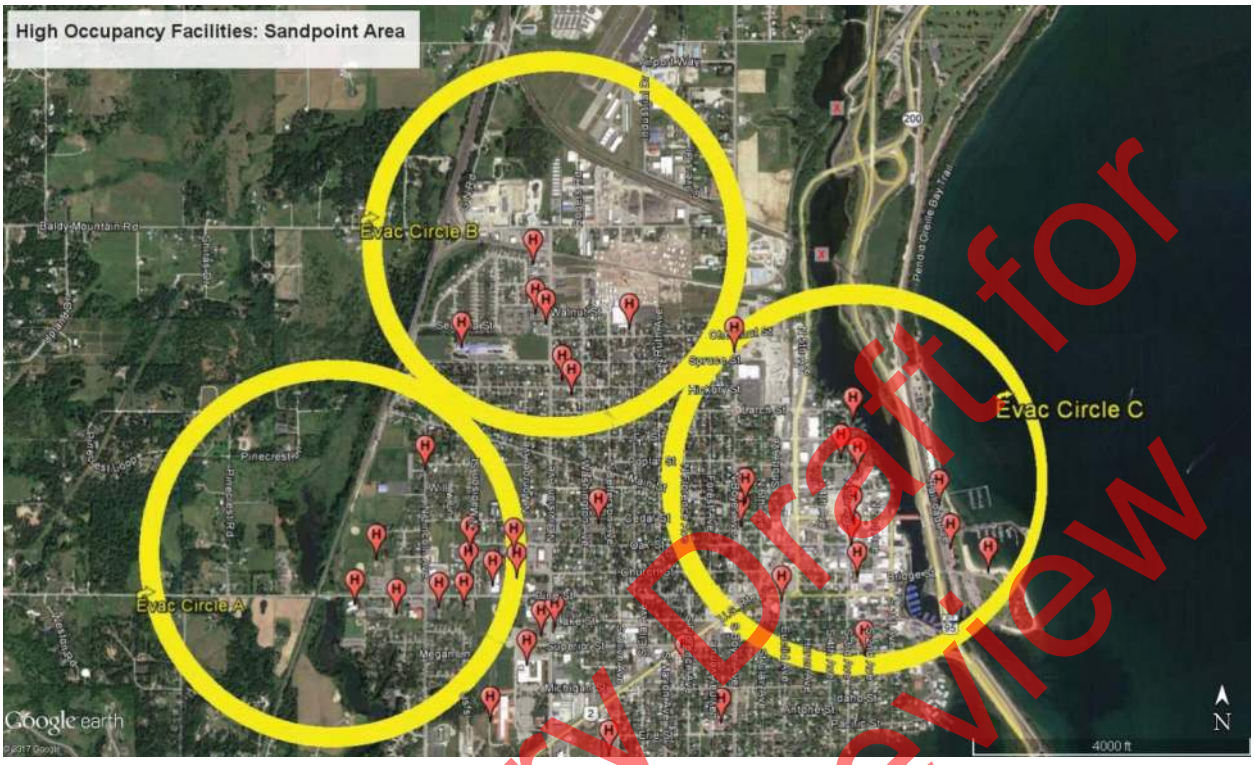

Preliminary Draft for Agency Review

Preliminary Draft for Agency Review

This page intentionally left blank for correct double-sided printing.

Preliminary Draft for Agency Review

Appendix F Boat Ramps and Marinas

Preliminary Draft for Agency Review

Sector	Site ID	Site Name (See Note 1)	Usable at Low Pool Water Level?	Latitude and Longitude	General Suitability at Full Pool (See Note 2)	Gravel or Concrete Boat Ramp?	Field notes
1A	US2 0.37	Oldtown Boat Ramp	Yes	48.185348 -117.032438	1	Concrete	Good floating dock.
1A	none	Albeni Falls Dam	Uncertain	48.179392 -116.996120	1	Concrete	No dock. Use dependent on river flows.
1A	US2 2.21	Albeni Cove Boat Ramp	No	48.176539 -116.997049	1	Concrete	Generally usable from mid-June to the end of September. Availability dependent on river flows as well as lake elevation. Access gate closed at night during open period. Closed to vehicle access during off-season. Contact U.S. Army Corps of Engineers Albeni Falls Dam (see contact sheet at beginning of this document).
1B	US2 6.38	Priest River City Boat Ramp	Yes	48.176933 -116.904242	1	Concrete	Usability confirmed at lake elevation 2,054 ft. Massive concrete and rock ballasts protect boat ramp from stream flows. High quality floating docks. Auto access is confusing—must parallel railroad tracks on Railroad Avenue which is a poorly maintained road.
1B	US2 6.87	Priest River Mouth Boat Ramp also known as "The Mud Hole"	No	48.177921 -116.89271	2	Concrete	Ramp usable mid-June to end of September. Launchable elevation is 2,058 ft. Swift current on Priest River during high water flows may pose a hazard. Site may be gated at night.
2A	US2 13.38	Willow Bay Resort Boat Ramp (Marina)	No	48.152507 -116.76856	2	Concrete	Fuel available. Phone 208-265-8854

Preliminary Draft for Agency Review

Sector	Site ID	Site Name (See Note 1)	Usable at Low Pool Water Level?	Latitude and Longitude	General Suitability at Full Pool (See Note 2)	Gravel or Concrete Boat Ramp?	Field notes
2A	US2 13.49	Riley Creek Boat Ramp	No	48.158966 -116.772205	2	Concrete	Usable mid-June to end of September. USACE reports launchable at lake elevation 2,058 ft. Gate closed at night during open season; closed to vehicle access during off-season.
2A	US2 14.37	Laclede Ferry Boat Ramp	Yes	48.161332 -116.754025	1	Concrete	Ramps usable mid-June to end of September. Ramp observed usable at lake elevation 2,054 ft, but docks were unusable at this elevation.
2A	US2 16.29	Morton Slough Boat Ramp	No	48.180695 -116.714602	1	Concrete	Usable mid-June to end of September. USACE reports launchable elevation is 2,059 ft. Gate closed at night during open season; closed to vehicle access during off-season.
2B	US2 25.15	Dover Marina Boat Ramp	No	48.244936 -116.614668	1	Concrete	Usable mid-June to end of September. Contact Dover Bay at 208-263-3083. Fuel available.
2B	US95 470.21	Springy Point Boat Ramp	No	48.236959 -116.586229	2	Concrete	Usable mid-June to end of September. USACE reports launchable elevation is 2,059 ft. Gate closed at night during open season; closed to vehicle access during off-season.
3	US95 473.87	Sandpoint City Beach Boat Ramp (Sandpoint Marina Windbag Marina)	No	48.271857 -116.541449	1	Concrete	West boat ramp was observed to be usable at 2,054 ft, but east ramp was unusable. Shallow water just offshore may require jet boats or mud buddy props rather than prop-driven boats. Marinas have no fuel for servicing facilities—only boat parking.
4A / 5	SR200 41.38	Hawkin's Point Boat Ramp	No	48.282777 -116.378872	2	Gravel	Usable in mid-June to end of September. Launchable at lake elevation 2,056 ft.

Preliminary Draft for Agency Review

Sector	Site ID	Site Name (See Note 1)	Usable at Low Pool Water Level?	Latitude and Longitude	General Suitability at Full Pool (See Note 2)	Gravel or Concrete Boat Ramp?	Field notes
5	SR200 42.59	Trestle Creek Boat Ramp	No	48.276717 -116.347099	2	Concrete	Usable in mid-June to end of September. Launchable at lake elevation 2,054 ft, but the dock is unusable. Caution: sharp rock ballast on each side of ramp. Wind from the south often makes this launch site very hazardous.
5	SR200 44.98	Hope Boat Basin Boat Ramp	Yes	48.250419 -116.315243	1	Concrete	Good access even in low water. Managed by Bonner County. This ramp is suitable for very large vessels even in low water.
5	SR200 46.25	Pringle Park Boat Ramp	No	48.239177 -116.29388<	2	Concrete and gravel	Usable to lake elevation 2054 but unusable at low pool elevation. More protection offered here than at Trestle Creek but wind can make this launch site hazardous.
5	SR200 47.38	Hope Marina Boat Ramp	No	48.229128 -116.276511	1	Concrete	Unusable below lake elevation 2,058 ft. Marina. Fuel available.
5	SR200 47.9	Beyond Hope Resort Boat Ramp	No	48.215623 -116.285212	2	Concrete	
5	SR200 49.76	Island View Boat Ramp	unlikely	48.193974 -116.285392	2	Concrete	Private ramp. Small breakwater area to shelter boat parking.
6	SR200 51.69	Clark Fork River Drift Yard Boat Ramp	Yes	48.173532 -116.231974	1	Concrete	Ramp observed usable at lake elevation 2,054 ft; however, dock is unusable. Channel flowing by the launch site may be very shallow at this elevation requiring jet boats or mud buddies. Closed from March 1 through June 15 for waterfowl nesting.

Preliminary Draft for Agency Review

Sector	Site ID	Site Name (See Note 1)	Usable at Low Pool Water Level?	Latitude and Longitude	General Suitability at Full Pool (See Note 2)	Gravel or Concrete Boat Ramp?	Field notes
6	SR200 54.28	Johnson Creek Boat Ramp	No	48.138974 -116.228631	2	Concrete	Usable at lake elevation 2,054 ft, but the creek channel away from the launch may be impassable at this lake elevation. Very narrow boat ramps. No cell phone service in this area.
6	SR200 54.83	Derr Island Boat Ramp	No	48.141516 -116.206072	3	Gravel	Very rudimentary at intersection of Derr Island Road and Johnson Creek Road. Not usable at low water. Appears to be public land.
6	SR200 57.07	Pint Lane Boat Ramp	No	48.124568 -116.156401	3	Concrete ramp with thick dirt and gravel on it.	Private land.
6	SR200 58.77	Private Boat Ramp	No	48.103583 -116.140426	2	Concrete and gravel	No dock. Use dependent on river flows. Private land.
6	SR200 60.79	Clark Fork River Access Boat Ramp	No	48.092555 -116.097287	3	Concrete	No dock. Use dependent on river flows. Private land.
6	SR200 61.63	Cabinet Gorge Fish Hatchery Boat Ramp	No	48.086706 -116.08024<	3	Gravel	No dock. Use dependent on river flows.
6	SR200 62.95	Cabinet Gorge Dam Upstream Boat Ramp	Yes	48.087107 -116.052317	3	Gravel	Access controlled by Avista 406-847-1280. Usability dependent upon reservoir level.
7A	US 95 462.56	Sandy Beach Boat Ramp (Lake Cocolalla)	NA	48.126724 -116.624359	3	gravel	Not maintained in winter. Very rough access.
7A	US95 463.62	Lake Cocolalla Boat Ramp	NA	48.138325 -116.60323	1	Concrete	Very good dock and ramp.

Preliminary Draft for Agency Review

Sector	Site ID	Site Name (See Note 1)	Usable at Low Pool Water Level?	Latitude and Longitude	General Suitability at Full Pool (See Note 2)	Gravel or Concrete Boat Ramp?	Field notes
7A	US95 465.12	Round Lake Boat Ramp	NA	48.164107 -116.637451	3	Gravel	No gas-powered motors allowed on boats. Electric or self-propelled boats only. Round Lake is separate from Lake Pend Oreille and unaffected by fluctuating Lake Pend Oreille levels.
7B	US95 471.08	Bottle Bay Bridge Boat Ramp	No	48.230089 -116.537762	3	Gravel	Boat ramp may require 4WD during periods of snow or rain.
7B	US95 471.65	Bottle Bay Marina Boat Ramp	No	48.238042 -116.445367	2	Concrete	Access to boat ramp is down steep narrow road with little turn around room. Fuel available.
7B	US95 472.98	Sourdough Point Boat Ramp	No	48.255446 -116.469042	2	Concrete	Contact Water Treatment Operator: Robert Hanson 208-265-4270. This ramp goes dry early in fall. Small shallow marina has no fuel or service facilities; only boat parking. Private land.
Other	SR54 14.65	Eagle Boat Ramp, Farragut State Park	Yes	47.965026 -116.545805	1	Concrete	This is one of the best boat ramps on the lake, but it is at the southern end of the lake and a long distance from areas likely to be impacted by hazmat spills.
Other	SR54 15.57	Bayview Boat Ramp (Marina)	Yes	47.980766 -116.558464	1	Concrete	The boat launch itself doesn't have much of a staging area, but there are plenty of adjacent lots and parking areas. Fuel available at boat ramp and at the nearby MacDonald's Hudson Bay Resort.
		War Memorial	No	48.264248, -116.558066	1	Concrete	Good staging area. Photo not included in subsequent pages.

General Notes:

1. Highlighted rows indicate the marinas which have fuel service available.
2. Suitability:
 Condition 1 = Suitable for large boats such as Sheriff's department or rescue boats

Preliminary Draft for Agency Review

Condition 2 = Suitable for smaller boats such as water ski boats.
Condition 3 = Suitable only for small fishing skiffs, canoe launches, or row boats.

3. All ramps have slip, trip, fall hazards, traffic/roadway hazards, congestion, water hazards, and hazards from spilled material. Expect extreme winter conditions from middle of November to middle of March. Most boat ramps are unusable from mid-October through mid-May due to low water levels.

Preliminary Draft for Agency Review

Lake Pend Oreille Boat Ramps & Marinas

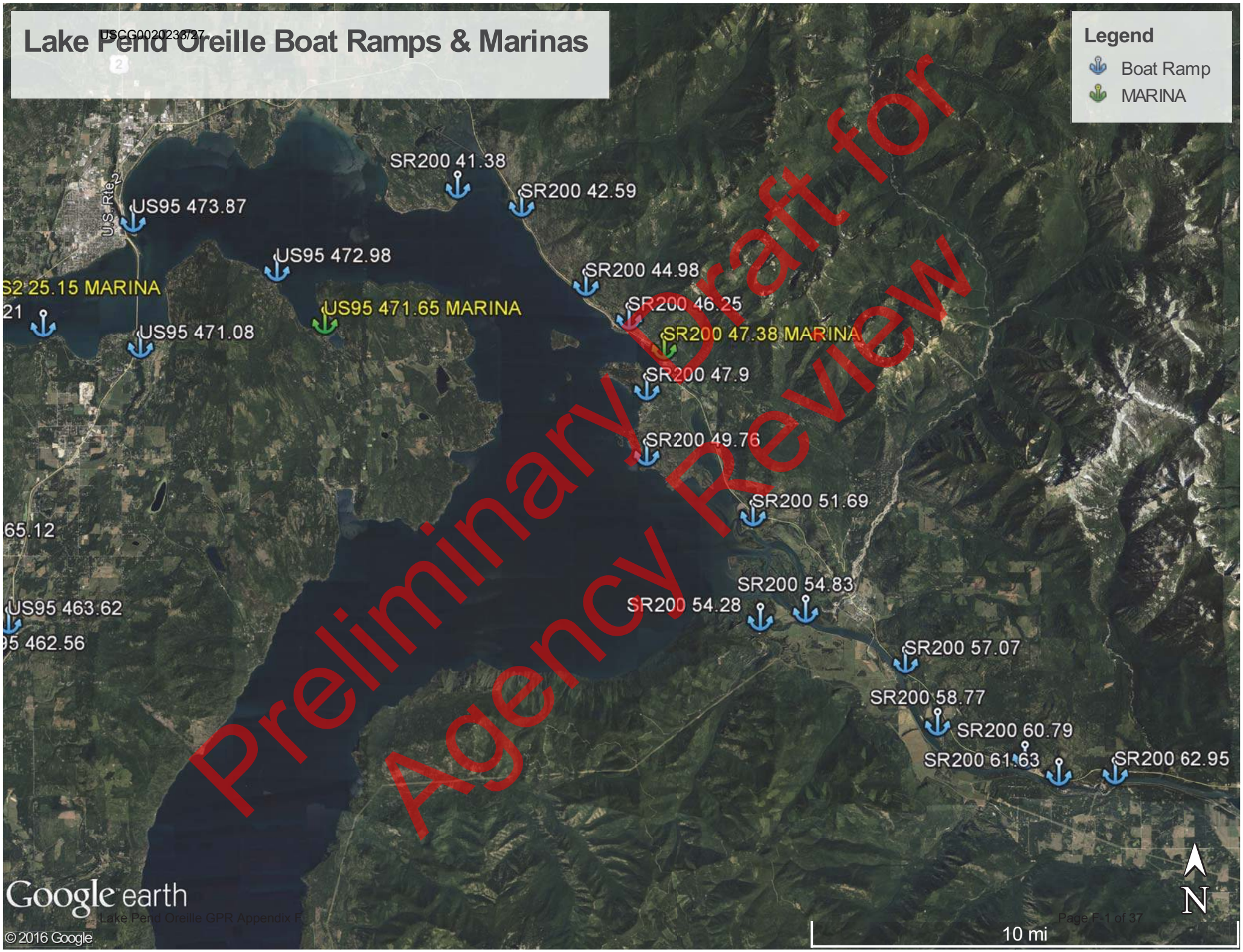

Preliminary Draft for Agency Review

Pend Oreille River Boat Ramps & Marinas

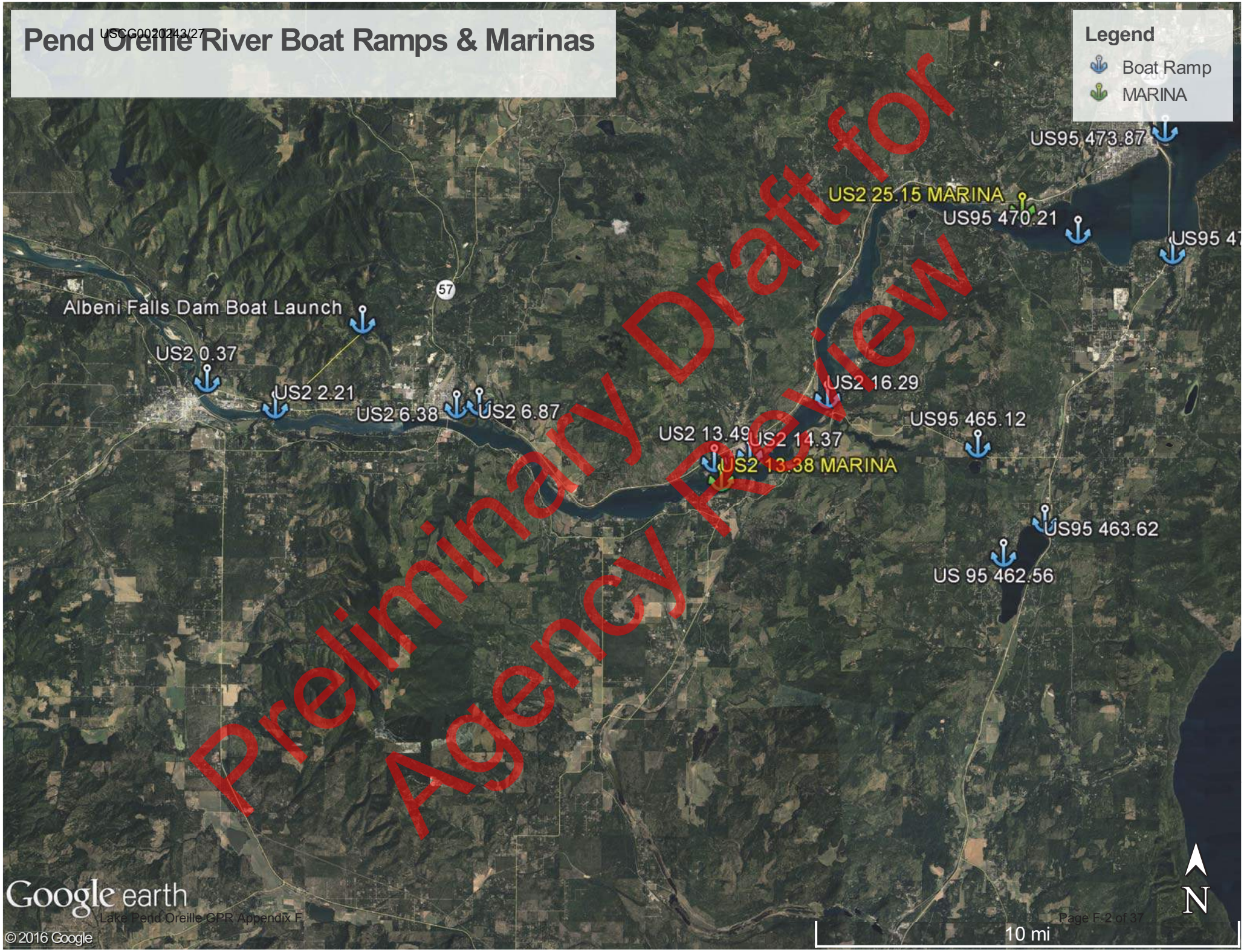

Preliminary Draft for Agency Review

Oldtown Boat Ramp

Back to boat ramp map

US2 0.37

Site Lat Long:	48.185348 -117.032438 (http://www.google.com/maps/place/48.185348,-117.032438)
Strategy Objective:	Boat Launch. Access only.
Site Safety Note:	Slip, trip, fall hazards; traffic/roadway hazards, congestion, water hazards, hazards from spilled material. Expect extreme winter conditions from middle of November to middle of March. Complete a task specific Job Safety Analysis
Staging Area:	Large parking area for vehicles and equipment adjacent to boat ramp. Concrete boat ramp.
Field Notes:	Large staging area. Ramp may not be usable in winter

Directions to Site

1. Head south on N Fifth Ave toward Cedar St. - 0.2 mi 2. Turn right onto US 2 W/Pine St - 27.8 mi 3. Turn left at Selkirk Way - 151 ft 4. Turn right onto Old Diamond Mill Rd - 0.3 mi

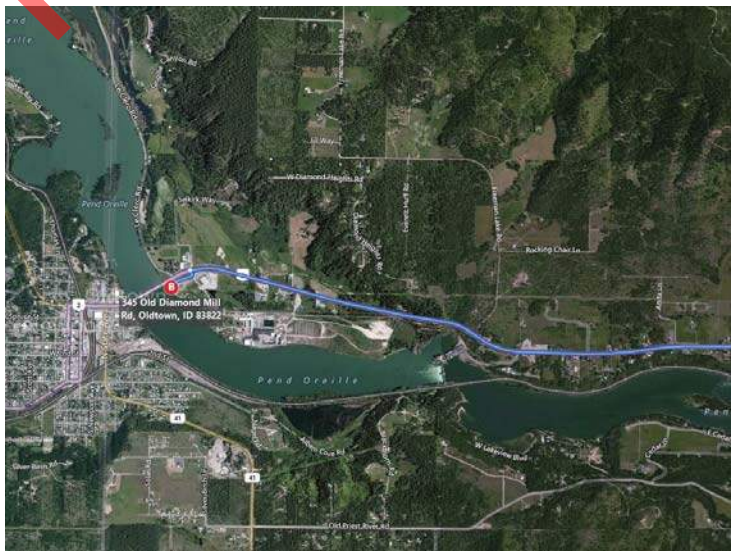

Preliminary Draft for Agency Review

Albeni Cove Boat Ramp

Back to boat ramp map

US2 2.21

Site Lat Long:	48.176539 -116.997049 (http://www.google.com/maps/place/48.176539,-116.997049)
Strategy Objective:	Boat Launch. Access only.
Site Safety Note:	Slip, trip, fall hazards; traffic/roadway hazards, congestion, water hazards, hazards from spilled material. Expect extreme winter conditions from middle of November to middle of March. Complete a task specific Job Safety Analysis
Staging Area:	Large paved parking area for vehicles and equipment adjacent to boat ramp. Onsite boat ramp. Concrete boat ramp.
Field Notes:	Restricted access. Recreation area gate locked from 2200-0700. Sheriff Deputies and Campground Host have keys. Ramp may not be usable in winterRamp is generally usable from mid-June to the end of September. Launcable water elevation is 2055 ft. Availability dependant on river flows as well as elevation. Kept closed if flows at dam are greater than 40 cfs. Access gate closed at night furing

Directions to Site

1. Head south on N Fifth Ave toward Cedar St - 0.2 mi 2. Turn right onto US-2 W/Pine St - 22.2 mi 3. Turn left onto Wisconsin St - 0.4 mi 4. Turn right onto Old Priest River Rd - 5.0 mi 5. Turn right onto Blackthorne Rd - 0.8 mi 6. Turn left to stay on Blackthorne Rd - 459 ft 7. Continue straight onto Albeni Cove Rd - 0.3 mi 8. Sharp left - 161 ft 9. Albeni Cove Recreation Area

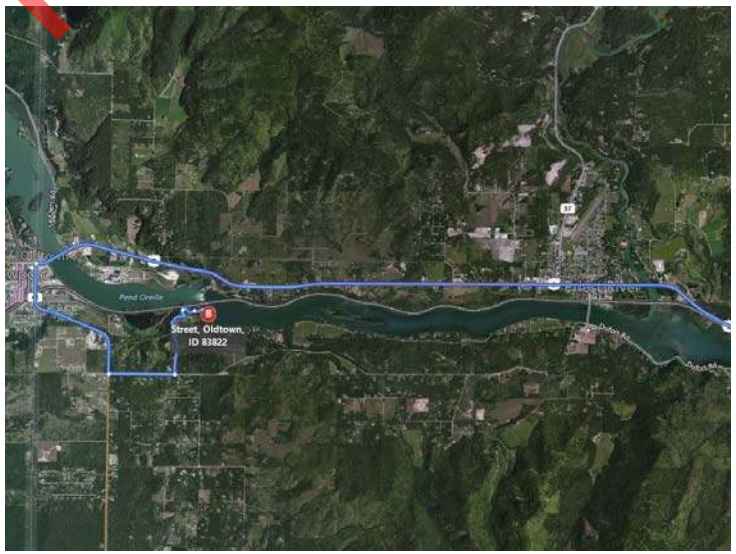

Preliminary Draft for Agency Review

Priest River City Boat Ramp

Back to boat ramp map

US2 6.38

Site Lat Long:	48.176933 -116.904242 (http://www.google.com/maps/place/48.176933,-116.904242)
Strategy Objective:	Boat Launch. Access only.
Site Safety Note:	Slip, trip, fall hazards; traffic/roadway hazards, congestion, water hazards, hazards from spilled material. Expect extreme winter conditions from middle of November to middle of March. Complete a task specific Job Safety Analysis
Staging Area:	Large city park with large parking area and turnaround. Concrete boat ramp.
Field Notes:	Large staging area. Ramp may not be usable in winter

Directions to Site

1. Head south on N Fifth Ave toward Cedar St - 0.2 mi 2. Turn right onto US-2 W/Pine St - 22.2 mi 3. Turn left onto Wisconsin St - 0.2 mi 4. Turn left onto Railroad Ave - 394 ft 5. Railroad Avenue, Priest River, Idaho

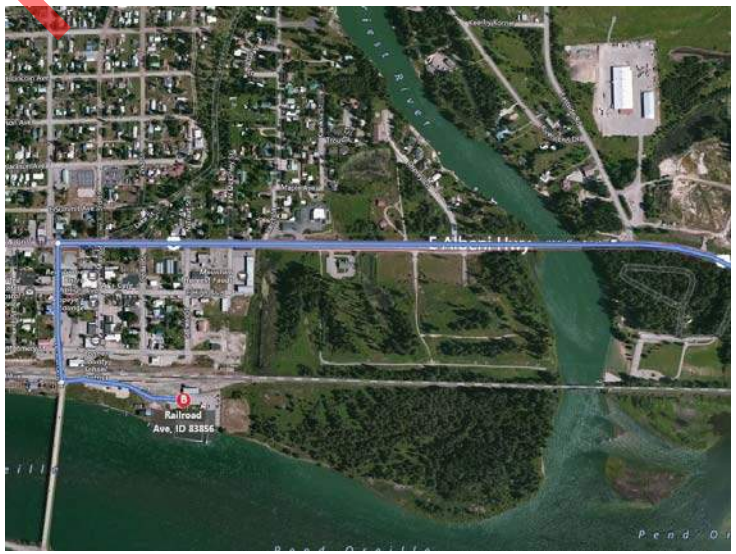

Preliminary Draft for Agency Review

Priest River South Boat Ramp

Go back to boat ramp map

US2 6.87

Site Lat Long:	48.177921, -116.89271 (http://www.google.com/maps/place/48.177921,-116.89271)
Strategy Objective:	Boat Launch. Access only.
Site Safety Note:	Slip, trip, fall hazards; traffic/roadway hazards, congestion, water hazards, hazards from spilled material. Expect extreme winter conditions from middle of November to middle of March. Complete a task specific Job Safety Analysis
Staging Area:	Concrete parking lot, boat ramp, and grass field Concrete boat ramp.
Field Notes:	Large staging area. Ramp may not be usable in winter. Ramp usable mid June to End of September. Launchable elevation is 2058 ft. Need to verify if this area is gated at night.

Directions to Site

1. Head south on N Fifth Ave toward Cedar St - 0.2 mi 2. Turn right onto US-2 W/Pine St - 22.2 mi 3. In the town of Priest River, ID, Turn left onto Wisconsin St- 0.2 mi 4. Turn left onto Railroad Ave 5. Priest River Park

Preliminary Draft for Agency Review

Willow Bay Resort Boat Ramp

Back to boat ramp map

US2 13.38

Site Lat Long:	48.152507 -116.76856 (http://www.google.com/maps/place/48.152507,-116.76856)
Strategy Objective:	Boat Launch. Access only.
Site Safety Note:	Slip, trip, fall hazards; traffic/roadway hazards, congestion, water hazards, hazards from spilled material. Expect extreme winter conditions from middle of November to middle of March. Complete a task specific Job Safety Analysis
Staging Area:	Concrete Boat Ramp. $10 launch fee. Contact Resort office at 208-265-8854 Concrete boat ramp.
Field Notes:	Ramp may not be usable in winter

Directions to Site

1. Take US-95 S for 8.0 mi 2. Turn right onto Dufort Rd- 9.5 mi 3. Turn right onto Willow Bay Rd and continue to destination

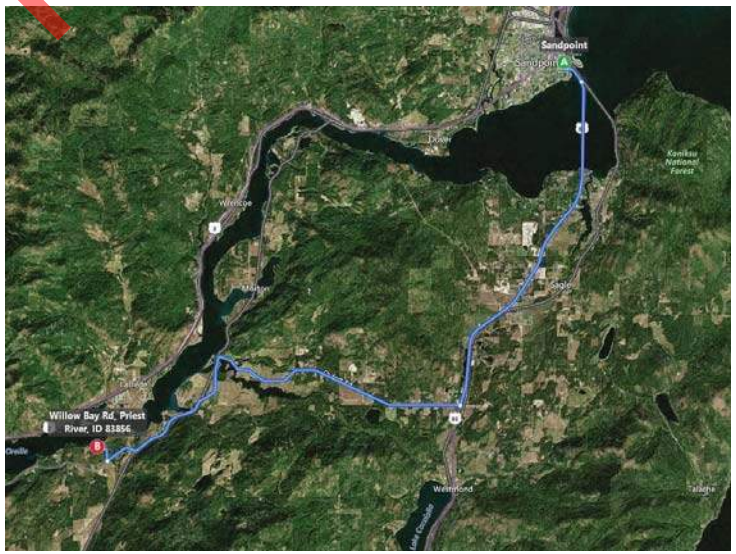

Preliminary Draft for Agency Review

Riley Creek Ramp

Back to boat ramp map

US2 13.49

Site Lat Long:	48.158966 -116.772205 (http://www.google.com/maps/place/48.158966,-116.772205)
Strategy Objective:	Boat Launch. Access only.
Site Safety Note:	Slip, trip, fall hazards; traffic/roadway hazards, congestion, water hazards, hazards from spilled material. Expect extreme winter conditions from middle of November to middle of March. Complete a task specific Job Safety Analysis
Staging Area:	Large asphalt parking lot with large staging area. Concrete boat ramp.
Field Notes:	Usable mid-June to End of Sept. Launcahable elevation is 2058. Gate closed at night during open season; closed to vehicle access during off-season.

Directions to Site

1. Head south on N Fifth Ave toward Cedar St - 0.2 mi 2. Turn right onto US-2 W/Pine St - 13.8 mi 3. Turn left onto Riley Creek Rd - 0.4 mi 4. Turn right onto Riley Creek Park Rd - 1.0 mi 5. Riley Creek Recreation Area, Laclede, Idaho

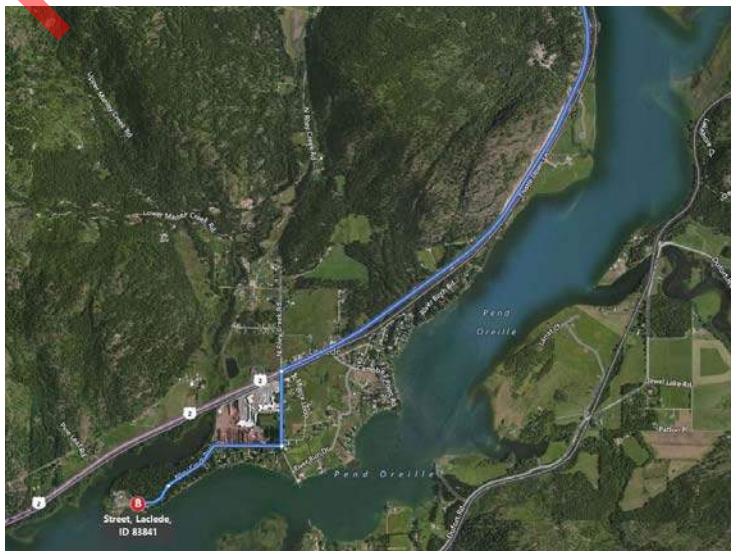

Preliminary Draft for Agency Review

Laclede Ferry Boat Ramp

Back to boat ramp map

US2 14.37

Site Lat Long:	48.161332 -116.754025 (http://www.google.com/maps/place/48.161332,-116.754025)
Strategy Objective:	Boat Launch. Access only.
Site Safety Note:	Slip, trip, fall hazards; traffic/roadway hazards, congestion, water hazards, hazards from spilled material. Expect extreme winter conditions from middle of November to middle of March. Complete a task specific Job Safety Analysis
Staging Area:	Concrete with a gravel parking lot Concrete boat ramp.
Field Notes:	Ramp may not be usable in winter

Directions to Site

1. Head south on N Fifth Ave Toward Cedar St - 0.2 mi 2. Turn right onto US-2 W/Pine St - 13. 8 mi 3. Turn left onto Riley Creek Rd - 0.4 mi 4. Continue onto Laclede Ferry Rd - 0.2 mi 5. Laclede Ferry Road, Laclede, Idaho

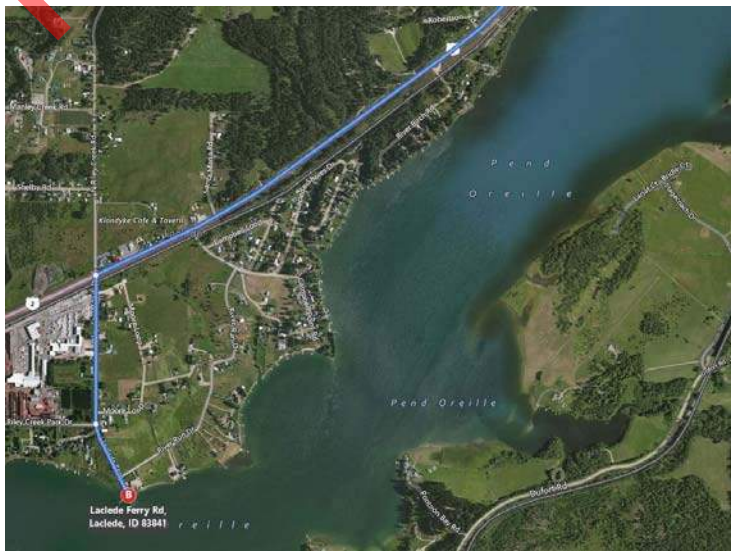

Preliminary Draft for Agency Review

Morton Slough Boat Ramp

Back to boat ramp map

US2 16.29

Site Lat Long:	48.180695 -116.714602 (http://www.google.com/maps/place/48.180695,-116.714602)
Strategy Objective:	Boat Launch. Access only.
Site Safety Note:	Slip, trip, fall hazards; traffic/roadway hazards, congestion, water hazards, hazards from spilled material. Expect extreme winter conditions from middle of November to middle of March. Complete a task specific Job Safety Analysis
Staging Area:	Large parking area for vehicles and equipment adjacent to boat ramp. Concrete boat ramp.
Field Notes:	Usable mid-June to End of Sept. Launcahable elevation is 2059. Gate closed at night during open season; closed to vehicle access during off-season.

Directions to Site

1. Head south on N Fifth Ave toward Cedar St - 0.2 mi 2. Turn left onto Pine St - 0.3 mi 3. Turn right onto S 1st Ave - 0.2 mi 4. Turn eft onto E Superior St - 0.5 mi 5. Merge onto US-95 S - 8.0 mi 6. Turn right onto Dufort Rd - 5.7 mi 7. Turn right onto Lakeshore Dr - 52 ft 8. Turn left onto Wild Rose Ln - 194 ft 9. Wild Rose Lane, Sagle, Idaho

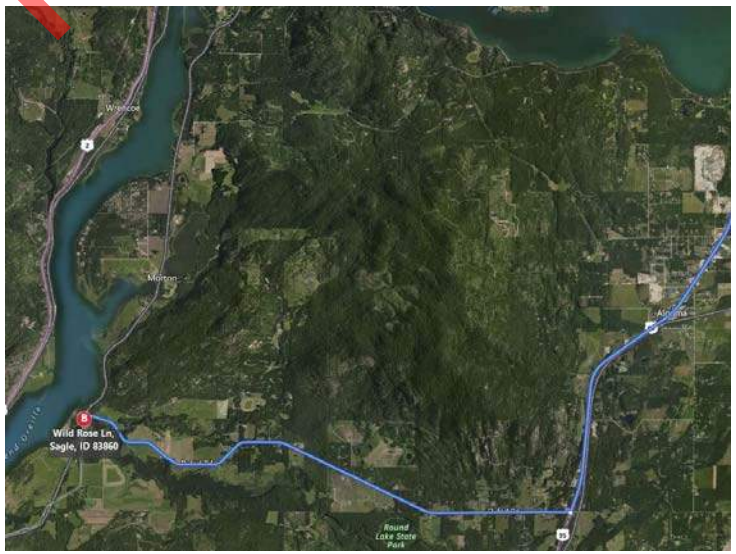

Preliminary Draft for Agency Review

Dover Bay Boat Ramp

Back to boat ramp map

US2 25.15

Site Lat Long:	48.244936 -116.614668 (http://www.google.com/maps/place/48.244936,-116.614668)
Strategy Objective:	Boat Launch. Access only.
Site Safety Note:	Slip, trip, fall hazards; traffic/roadway hazards, congestion, water hazards, hazards from spilled material. Expect extreme winter conditions from middle of November to middle of March. Complete a task specific Job Safety Analysis
Staging Area:	Concrete boat ramp.
Field Notes:	Contact Jenny Hickson with Dover bay at 208-263-3083. Ramp may not be usable in winter

Directions to Site

1. Head south on N Fifth Ave Toward Cedar St - 0.2 mi 2. Turn right onto US-2 W/Pine St - 2.7 mi 3. Turn left onto Old Hwy U.S. 2 - 0.2 mi 4. Continue onto Dover Bay Blvd - 0.3 mi 5. Continue onto Dover Bay Pkwy - 0.2 mi 6. Turn right onto Lakeshore Avenue - 495 ft 6. 639 Lakeshore Avenue, Dover, Idaho

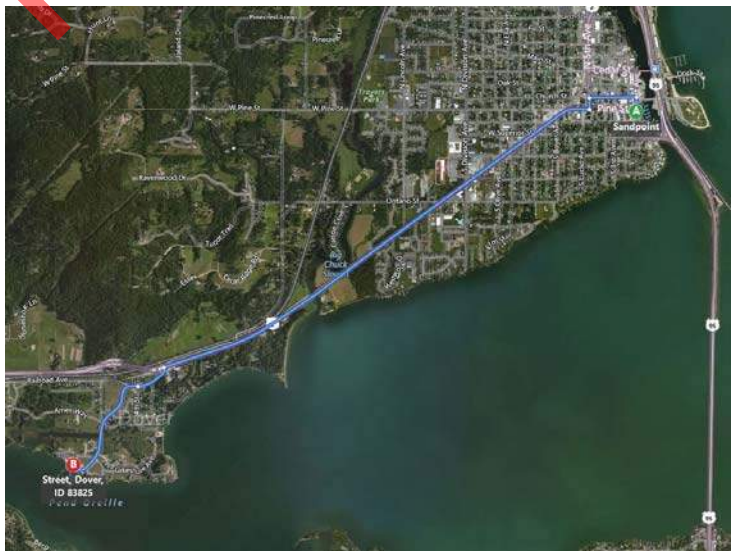

Preliminary Draft for Agency Review

Site Lat Long:	48.236959 -116.586229 (http://www.google.com/maps/place/48.236959,-116.586229)
Strategy Objective:	Boat Launch. Access only.
Site Safety Note:	Slip, trip, fall hazards; traffic/roadway hazards, congestion, water hazards, hazards from spilled material. Expect extreme winter conditions from middle of November to middle of March. Complete a task specific Job Safety Analysis
Staging Area:	A large boat ramp and dock with plenty of turn around room. A large day use parking lot is a little ways down from the boat launch. Concrete boat ramp.
Field Notes:	Usable mid-June to End of Sept. Launcahable elevation is 2059. Gate closed at night during open season; closed to vehicle access during off-season.

Directions to Site

1. Head south on N Fifth Ave toward Cedar St - 0.2 mi 2. Turn left onto Pine St - 0.3 mi 3. Turn right onto S 1st Ave - 0.2 mi 4. Turn left onto E Superior St - 0.5 mi 5. Merge onto US-95 S - 1.9 mi 6. Turn right onto Lakeshore Dr - 3.1 mi 7. Turn right onto Springy Point 8. 292 ft Springy Point, Sagle, Idaho

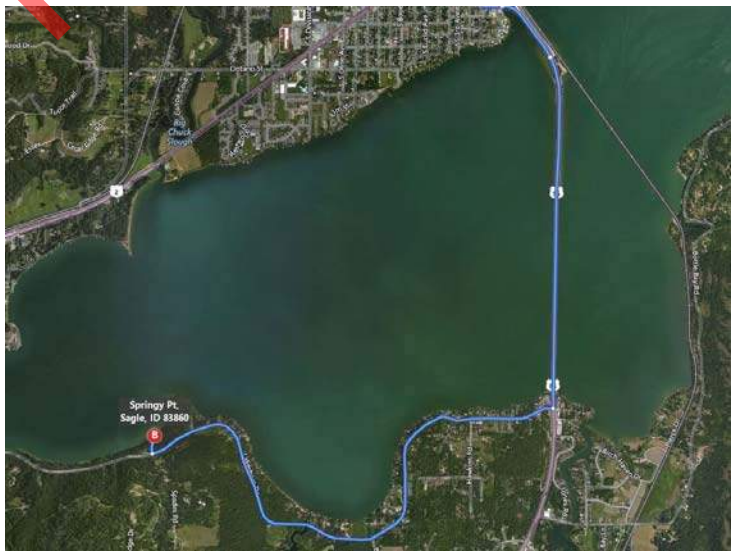

Preliminary Draft for Agency Review

Sandpoint City Beach Boat Ramp

Back to boat ramp map

US95 473.87

Site Lat Long:	48.271857 -116.541449 (http://www.google.com/maps/place/48.271857,-116.541449)
Strategy Objective:	Boat Launch. Access only.
Site Safety Note:	Slip, trip, fall hazards; traffic/roadway hazards, congestion, water hazards, hazards from spilled material. Expect extreme winter conditions from middle of November to middle of March. Complete a task specific Job Safety Analysis
Staging Area:	2 concrete boat ramps adjacent to large parking and staging area. Concrete boat ramp.
Field Notes:	Sanpoint City beach BL. Ramp may not be usable in winter

Directions to Site

1. Head south on N Fifth Ave toward Cedar St - 171 ft 2. Turn left onto Pine St 0.3 mi 3. Pine St turns left and becomes N First Ave 246 ft 4. Turn right onto Bridge St 0.2 mi 5. Turn right

Preliminary Draft for Agency Review

Hawkins Point Boat Ramp

Back to boat ramp map

SR200 41.38

Site Lat Long:	48.282777 -116.378872 (http://www.google.com/maps/place/48.282777,-116.378872)
Strategy Objective:	Boat Launch. Access only.
Site Safety Note:	Slip, trip, fall hazards; traffic/roadway hazards, congestion, water hazards, hazards from spilled material. Expect extreme winter conditions from middle of November to middle of March. Complete a task specific Job Safety Analysis
Staging Area:	Gravel ramp with adequate parking. Idaho Fish & Game site. Concrete dock with no cleats or other tie-off points. Gravel boat ramp.
Field Notes:	Medium sized staging area. Usable in mid-June to end of sept. Launchable elevation is 2056 ft.

Directions to Site

1. Continue onto ID-200 for 6.4 mi 2. Turn right onto Sunnyside Cut Off Rd for 1.2 mi 3. Turn left onto Sunnyside Rd for 2.1 mi 4. Slight right to stay on Sunnyside Rd 5. Destinations will be on the right

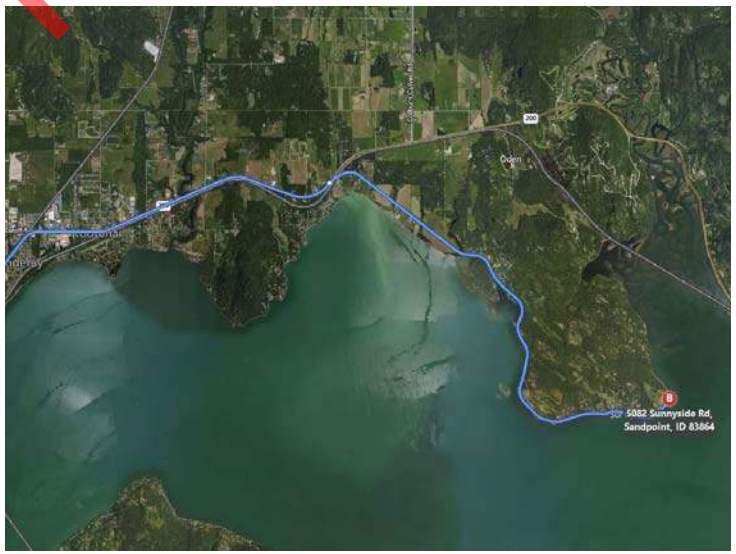

Preliminary Draft for Agency Review

Trestle Creek Boat Ramp

Back to boat ramp map

SR200 42.59

Site Lat Long:	48.276717 -116.347099 (http://www.google.com/maps/place/48.276717,-116.347099)
Strategy Objective:	Boat Launch. Access only.
Site Safety Note:	Slip, trip, fall hazards; traffic/roadway hazards, congestion, water hazards, hazards from spilled material. Expect extreme winter conditions from middle of November to middle of March. Complete a task specific Job Safety Analysis
Staging Area:	Concrete ramp with large parking area. Likely unusable during winter months when lake is low. Concrete boat ramp.
Field Notes:	Usable in mid-June to end of sept. Launchable elevation is 2054 ft

Directions to Site

1. Head north on US-2 E/N Fifth Ave toward Alder St - 1.0 mi 2. Continue onto ID-200 - 17.5 mi 3. Trestle Creek Boat Launch

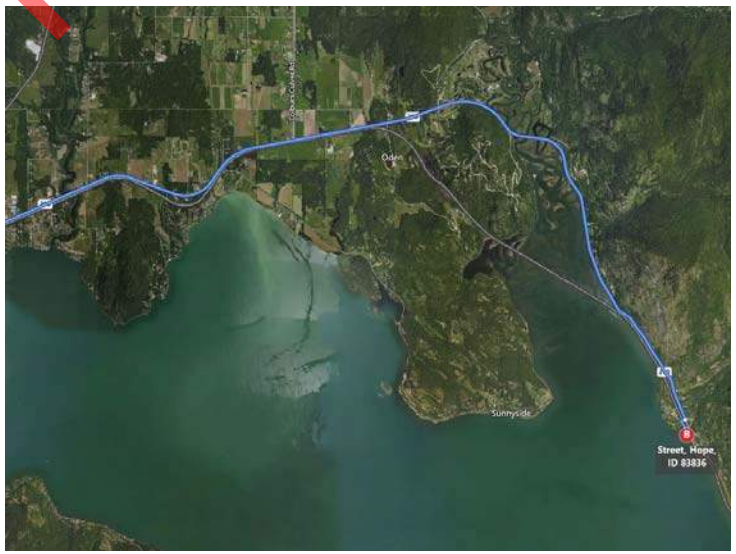

Preliminary Draft for Agency Review

Hope Boat Ramp

Back to boat ramp map

SR200 44.98

Site Lat Long:	48.250419 -116.315243 (http://www.google.com/maps/place/48.250419,-116.315243)
Strategy Objective:	Boat Launch. Access only.
Site Safety Note:	Slip, trip, fall hazards; traffic/roadway hazards, congestion, water hazards, hazards from spilled material. Expect extreme winter conditions from middle of November to middle of March. Complete a task specific Job Safety Analysis
Staging Area:	Concrete ramp. Concrete boat ramp.
Field Notes:	Good access even in low water. Managed by Bonner County. Ramp may not be usable in winter

Directions to Site

1. Head north on US-2 E/N Fifth Ave toward Alder St - 1.0 mi 2. Continue onto ID-200 - 14.8 mi 3. Turn left onto W Main St - 0.8 mi 4. Continue onto Lake - 249 ft 5. Turn left onto E Main St - 7 ft 6. 199 East Main Street, Hope, Idaho

Preliminary Draft for Agency Review

Pringle Park Boat Ramp

Back to boat ramp map

SR200 46.25

Site Lat Long:	48.239177 -116.29388 (http://www.google.com/maps/place/48.239177,-116.29388)
Strategy Objective:	Boat Launch. Access only.
Site Safety Note:	Slip, trip, fall hazards; traffic/roadway hazards, congestion, water hazards, hazards from spilled material. Expect extreme winter conditions from middle of November to middle of March. Complete a task specific Job Safety Analysis
Staging Area:	Concrete and gravel boat ramps. Concrete boat ramp.
Field Notes:	Site likely not usable during winter when lake is low. Managed by ID Fish and Game. Ramp may not be usable in winter.

Directions to Site

1. Take ID-200 for 16.4 mi 2. Destination will be on the right as one passes through East Hope

Preliminary Draft for Agency Review

Hope Marina Boat Ramp

Back to boat ramp map

SR200 47.38

Site Lat Long:	48.229128 -116.276511 (http://www.google.com/maps/place/48.229128,-116.276511)
Strategy Objective:	Boat Launch. Access only.
Site Safety Note:	Slip, trip, fall hazards; traffic/roadway hazards, congestion, water hazards, hazards from spilled material. Expect extreme winter conditions from middle of November to middle of March. Complete a task specific Job Safety Analysis
Staging Area:	Concrete ramp near Floating Restaurant. Contact 208-264-5106. Likely not usable during winter when lake is low. Concrete boat ramp.
Field Notes:	Ramp may not be usable in winter

Directions to Site

1. Head north on US-2 E/N Fifth Ave toward Alder St - 1.0 mi 2. Continue onto ID-200 - 17.5 mi 3. Hope Marina BL, Hope, Idaho

Preliminary Draft for Agency Review

Beyond Hope Resort Boat Ramp

Back to boat ramp map

SR200 47.9

Site Lat Long:	48.215623 -116.285212 (http://www.google.com/maps/place/48.215623,-116.285212)
Strategy Objective:	Boat Launch. Access only.
Site Safety Note:	Slip, trip, fall hazards; traffic/roadway hazards, congestion, water hazards, hazards from spilled material. Expect extreme winter conditions from middle of November to middle of March. Complete a task specific Job Safety Analysis
Staging Area:	Concrete. Concrete boat ramp.
Field Notes:	Possibility that the ramp could be too shallow during winter months. Mooring fee charged for marina use. Contact 208-264-5251 for resort marina staff. Likely not usable during winter when lake is low. Ramp may not be usable in winter

Directions to Site

1. Head north on US-2 E/N Fifth Ave toward Alder St - 1.0 mi 2. Continue onto ID-200 - 18.3 mi 3. Turn right onto Hope Peninsula Rd/NF-1002/Peninsula Rd - 0.8 mi 4. Turn left onto Hope Peninsula Rd/Peninsula Rd - 0.6 mi 1243 Peninsula Road, Hope, Idaho

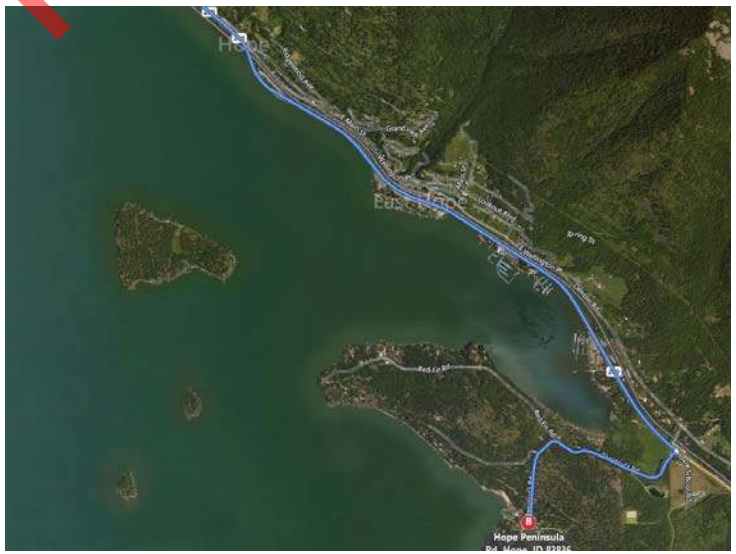

Preliminary Draft for Agency Review

Island View Boat Ramp

Back to boat ramp map

SR200 49.76

Site Lat Long:	48.193974 -116.285392 (http://www.google.com/maps/place/48.193974,-116.285392)
Strategy Objective:	Boat Launch. Access only.
Site Safety Note:	Slip, trip, fall hazards; traffic/roadway hazards, congestion, water hazards, hazards from spilled material. Expect extreme winter conditions from middle of November to middle of March. Complete a task specific Job Safety Analysis
Staging Area:	A large paved boat launch, though no visible parking. Looked like it was an extension to a private drive way. Concrete boat ramp.
Field Notes:	Ramp may not be usable in winter

Directions to Site

1. Head north on US-2 E/N Fifth Ave toward Alder St - 1.0 mi 2. Continue onto ID-200 - 18.3 mi 3. Turn right onto Hope Peninsula Rd/NF-1002/Peninsula Rd - 0.8 mi 4. Turn left onto Hope Peninsula Rd/Peninsula Rd - 1.3 mi 5. Turn left onto E David Thompson Rd - 0.1 mi 6. Turn right onto Osprey Cir - 0.5 mi 7. Slight left onto Kienholz Dr - 266 ft 8. Kienholz Drive, Hope, Idaho

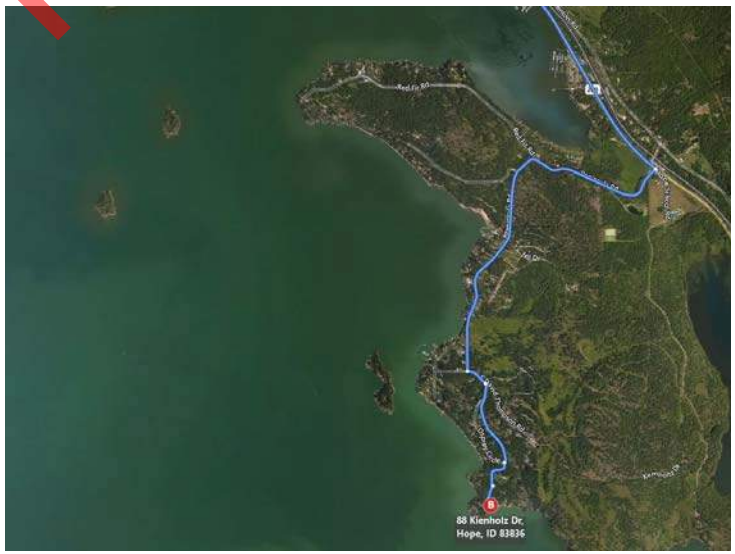

Preliminary Draft for Agency Review

Clark Fork Bay Driftyard Boat Ramp

Back to boat ramp map

SR200 51.69

Site Lat Long:	48.173532 -116.231974 (http://www.google.com/maps/place/48.173532,-116.231974)
Strategy Objective:	Boat Launch. Access only.
Site Safety Note:	Slip, trip, fall hazards; traffic/roadway hazards, congestion, water hazards, hazards from spilled material. Expect extreme winter conditions from middle of November to middle of March. Complete a task specific Job Safety Analysis
Staging Area:	Year-round concrete ramp. Large parking area for vehicles and equipment adjacent to ramp. Concrete boat ramp.
Field Notes:	Concrete ramp. Large parking area for vehicles and equipment adjacent to ramp. Ramp usable at 2058 ft. Access closed during goose nexting season.

Directions to Site

1. Head north on US-2 E/N Fifth Ave toward Alder St - 1.0 mi 2. Continue onto ID-200 - 2.7 mi 3. Turn right onto Kootenai Bay Rd - 387 ft 4. Turn left onto Whiskey Jack Rd - 0.8 mi

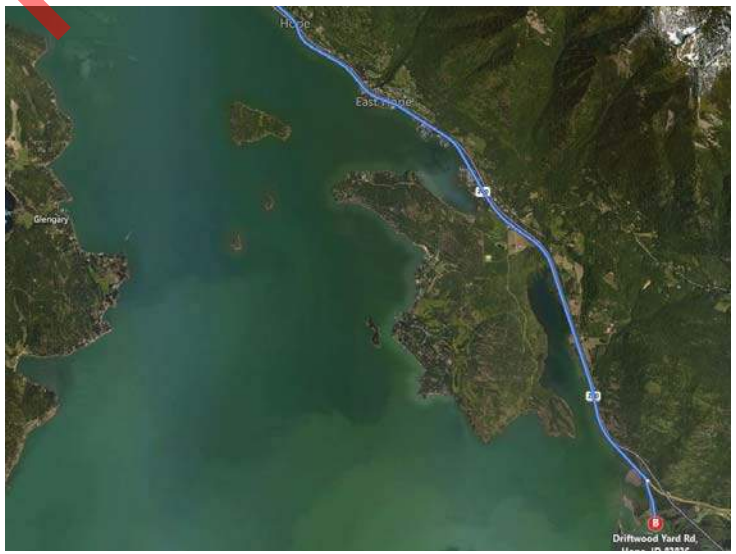

Preliminary Draft for Agency Review

Johnson Creek Boat Ramp

Back to boat ramp map

SR200 54.28

Site Lat Long:	48.138974 -116.228631 (http://www.google.com/maps/place/48.138974,-116.228631)
Strategy Objective:	Boat Launch. Access only.
Site Safety Note:	Slip, trip, fall hazards; traffic/roadway hazards, congestion, water hazards, hazards from spilled material. Expect extreme winter conditions from middle of November to middle of March. Complete a task specific Job Safety Analysis
Staging Area:	Twin boat launches parallel each other, both launches are rather narrow, so larger boats and trailers may be a tight squeeze. Boat launch is accompanied by a large parking and staging area. Concrete boat ramp.
Field Notes:	Twin boat launches parallel each other, both launches are rather narrow, so larger boats and trailers may be a tight squeeze. Boat launch is accompanied by a large parking and staging area. Concrete boat ramp. Launchable elevation is 2054 ft.

Directions to Site

1. Head north on US-2 E/N Fifth Ave toward Alder St - 1.0 mi 2. Continue onto ID-200 - 25.4 mi 3. Turn right onto Stephen St - 0.3 mi 4. Turn left onto S River Rd - 0.7 mi 5. Continue onto Johnson Creek Rd - 295 ft 6. Turn right to stay on Johnson Creek Rd - 9.5 mi 7. Turn right onto Johnson Creek Rd/NF-278 - 5.0 mi 8. Turn left to stay on Johnson Creek Rd/NF-278 - 3.4 mi 9. Johnson Creek Boat Launch

Preliminary Draft for Agency Review

Site Lat Long:	48.141516 -116.206072 (http://www.google.com/maps/place/48.141516,-116.206072)
Strategy Objective:	Boat Launch. Access only.
Site Safety Note:	Slip, trip, fall hazards; traffic/roadway hazards, congestion, water hazards, hazards from spilled material. Expect extreme winter conditions from middle of November to middle of March. Complete a task specific Job Safety Analysis
Staging Area:	A gravel boat launch off of a county road. There is extremely limited parking. Gravel boat ramp.
Field Notes:	This looks to be a public boat launch, and differs from the Derr Island Private BL. If it is private it is owned by the Delta Shore Estates. Ramp may not be usable in winter

Directions to Site

1. Head north on US-2 E/N Fifth Ave toward Alder St - 1.0 mi 2. Continue onto ID-200 - 25.4 mi
3. Turn right onto Stephen St - 0.3 mi 4. Turn left onto S River Rd - 0.7 mi 5. Continue onto Johnson Creek Rd - 295 ft 6. Turn right to stay on Johnson Creek Rd - 1.6 mi 7. Turn right onto Apple Grove Ln - 0.2 mi 8. Continue straight onto Derr Island Rd - 0.3 mi

Preliminary Draft for Agency Review

Pint Boat Ramp

Back to boat ramp map

SR200 57.07

Site Lat Long:	48.124568 -116.156401 (http://www.google.com/maps/place/48.124568,-116.156401)
Strategy Objective:	Boat Launch. Access only.
Site Safety Note:	Slip, trip, fall hazards; traffic/roadway hazards, congestion, water hazards, hazards from spilled material. Expect extreme winter conditions from middle of November to middle of March. Complete a task specific Job Safety Analysis
Staging Area:	Concrete with thick dirt on it. Concrete boat ramp.
Field Notes:	Locked Gate. Ramp may not be usable in winter

Directions to Site

1. Head north on US-2 E/N Fifth Ave toward Alder St - 1.0 mi 2. Continue onto ID-200 - 25.5 mi 3. 57209 Idaho 200

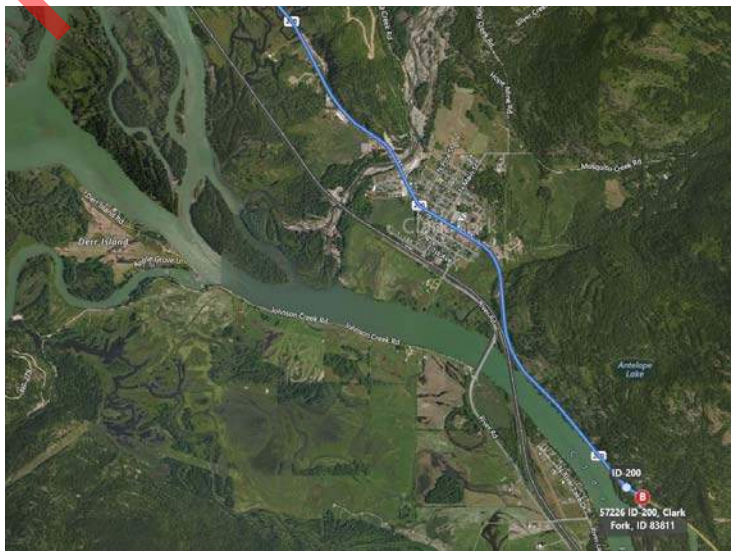

Preliminary Draft for Agency Review

Private Boat Ramp

Back to boat ramp map

SR200 58.77

Site Lat Long:	48.103583 -116.140426 (http://www.google.com/maps/place/48.103583,-116.140426)
Strategy Objective:	Boat Launch. Access only.
Site Safety Note:	Slip, trip, fall hazards; traffic/roadway hazards, congestion, water hazards, hazards from spilled material. Expect extreme winter conditions from middle of November to middle of March. Complete a task specific Job Safety Analysis
Staging Area:	Gravel/concrete Concrete boat ramp.
Field Notes:	Private contact Royce Anderson (208) 266-1177. Ramp may not be usable in winter

Directions to Site

1. Head north on US-2 E/N Fifth Ave toward Alder St - 1.0 mi 2. Continue onto ID-200 - 28.7 mi 3. Turn right when possible for river access 4. Private Boat Launch

Preliminary Draft for Agency Review

Clark Fork Access Boat Ramp

Back to boat ramp map

SR200 60.79

Site Lat Long:	48.092555 -116.097287 (http://www.google.com/maps/place/48.092555,-116.097287)
Strategy Objective:	Boat Launch. Access only.
Site Safety Note:	Slip, trip, fall hazards; traffic/roadway hazards, congestion, water hazards, hazards from spilled material. Expect extreme winter conditions from middle of November to middle of March. Complete a task specific Job Safety Analysis
Staging Area:	Gravel parking lot on lookers right Concrete boat ramp.
Field Notes:	Boat launch is locked. Contact Avista for access 406-847-1280. Ramp may not be usable in winter

Directions to Site

1. Head north on US-2 E/N Fifth Ave toward Alder St - 1.0 mi 2. Continue onto ID-200 - 27.8 mi 3. 60238 Idaho 200, Clark Fork, Idaho

Preliminary Draft for Agency Review

Cabinet Gorge Fish Hatchery Boat Ramp

Back to boat ramp map

SR200 61.63

Site Lat Long:	48.086706 -116.08024 (http://www.google.com/maps/place/48.086706,-116.08024)
Strategy Objective:	Boat Launch. Access only.
Site Safety Note:	Slip, trip, fall hazards; traffic/roadway hazards, congestion, water hazards, hazards from spilled material. Expect extreme winter conditions from middle of November to middle of March. Complete a task specific Job Safety Analysis
Staging Area:	Large parking and staging area on fish hatchery road adjacent to boat ramp. Gravel boat rapm.
Field Notes:	Contact fish hatchery for ramp access, 406-847-1282. Ramp may not be usable in winter

Directions to Site

1. Head north on US-2 E/N Fifth Ave toward Alder St - 1.0 mi 2. Continue onto ID-200 - 25.4 mi 3. Turn right onto Stephen St - 0.3 mi 4. Turn left onto S River Rd - 0.7 mi 5. Continue onto Johnson Creek Rd - 295 ft 6. Continue straight onto River Rd - 6.5 mi 7. Turn left onto Cabinet Gorge Rd - 0.6 mi 8. Turn right to stay on Cabinet Gorge Rd - 0.4 mi 9. Cabinet Gorge Hatchery

Preliminary Draft for Agency Review

Cabinet Gorge Dam Upstream Boat Ramp

Back to boat ramp map

SR200 62.95

Site Lat Long:	48.087107 -116.052317 (http://www.google.com/maps/place/48.087107,-116.052317)
Strategy Objective:	Boat Launch. Access only.
Site Safety Note:	Slip, trip, fall hazards; traffic/roadway hazards, congestion, water hazards, hazards from spilled material. Expect extreme winter conditions from middle of November to middle of March. Complete a task specific Job Safety Analysis
Staging Area:	Equipment and vehicle parking area adjacent to rail crossing. Large staging area onsite. Gravel boat ramp.
Field Notes:	Locked gate on road controlled by Avista 406-847-1280.Ramp may not be usable in winter

Directions to Site

1. Head north on US-2 E/N Fifth Ave toward Alder St - 1.0 mi 2. Continue onto ID-200 - 25.4 mi 3. Turn right onto Stephen St - 0.3 mi 4. Turn left onto S River Rd - 0.7 mi 5. Continue onto Johnson Creek Rd - 295 ft 6. Continue straight onto River Rd - 6.5 mi 7. Turn left onto Cabinet Gorge Rd - 0.6 mi 8. Turn right to stay on Cabinet Gorge Rd - 0.7 mi 9. Cabinet Gorge Dam

Preliminary Draft for Agency Review

Sandy Beach Boat Ramp

Back to boat ramp map

US 95 462.56

Site Lat Long:	48.126724 -116.624359 (http://www.google.com/maps/place/48.126724,-116.624359)
Strategy Objective:	Boat Launch. Access only.
Site Safety Note:	Slip, trip, fall hazards; traffic/roadway hazards, congestion, water hazards, hazards from spilled material. Expect extreme winter conditions from middle of November to middle of March. Complete a task specific Job Safety Analysis
Staging Area:	Posted no trespassing. No contact information on sign. Ramp size and quality not verified or documented. Unknown ramp type.
Field Notes:	Ramp may not be usable in winter

Directions to Site

1. Take US-95 S for 9.5 mi 2. Turn right onto Cocolalla Loop Rd 2.0 mi 3. Turn left at boat launch

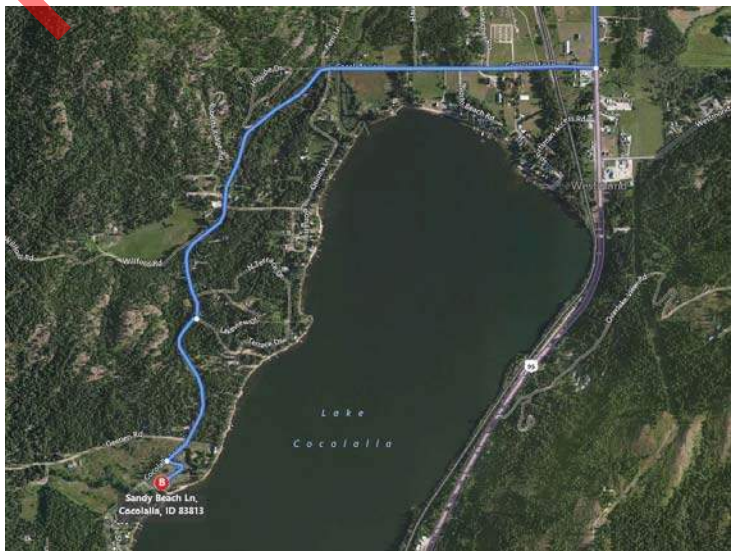

Preliminary Draft for Agency Review

Lake Cocolalla Boat Ramp

Back to boat ramp map

US95 463.62

Site Lat Long:	48.138325 -116.60323 (http://www.google.com/maps/place/48.138325,-116.60323)
Strategy Objective:	Boat Launch. Access only.
Site Safety Note:	Slip, trip, fall hazards; traffic/roadway hazards, congestion, water hazards, hazards from spilled material. Expect extreme winter conditions from middle of November to middle of March. Complete a task specific Job Safety Analysis
Staging Area:	Concrete ramp with large parking area for vehicles and equipment. Concrete boat ramp.
Field Notes:	Ramp may not be usable in winter

Directions to Site

1. Head south on N Fifth Ave Toward Cedar St - 0.2 mi 2. Turn left onto Pine St - 0.3 mi 3. Turn right onto S 1st Ave - 0.2 mi 4. Turn left onto E Superior St - 0.5 mi 5. Merge onto US - 95 S - 9.6 mi 6. Turn right onto Sportsman Access Rd - 0.2 mi 7. Turn left to stay on Sportsman Access Rd - 203 ft 8. 287 Sportsman Access Rd, Cocolalla, Idaho

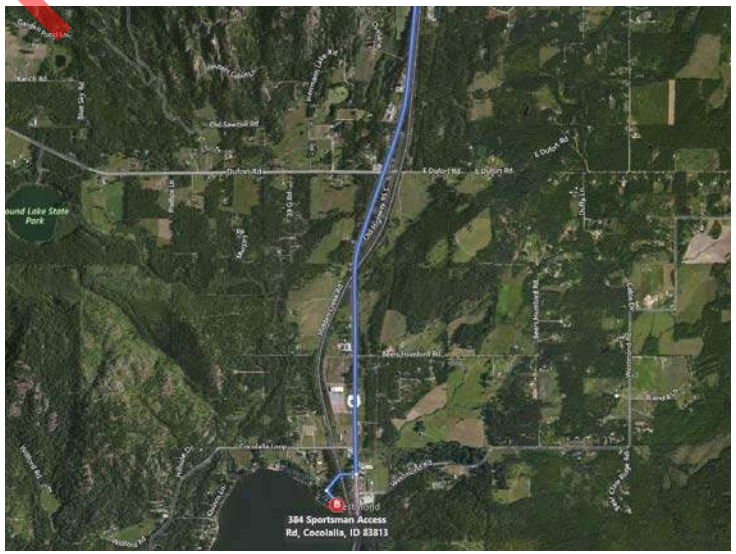

Preliminary Draft for Agency Review

Roundtop Boat Ramp

Back to boat ramp map

US95 465.12

Site Lat Long:	48.164107 -116.637451 (http://www.google.com/maps/place/48.164107,-116.637451)
Strategy Objective:	Boat Launch. Access only.
Site Safety Note:	Slip, trip, fall hazards; traffic/roadway hazards, congestion, water hazards, hazards from spilled material. Expect extreme winter conditions from middle of November to middle of March. Complete a task specific Job Safety Analysis
Staging Area:	Large gravel ramp with adjacent parking area. Gravel boat ramp.
Field Notes:	No gas powered motors allowed on boats. Electric or self propelled boats only. Ramp may not be usable in winter

Directions to Site

1. Head south on N Fifth Ave Toward Cedar St - 0.2 mi 2. Turn left onto Pine St - 0.3 mi 3. Turn right onto S 1st Ave - 0.2 mi 4. Turn left onto E Superior St - 0.5 mi 5. Merge onto US - 95 S - 8.0 mi 6. Turn right onto Dufort Rd - 1.9 mi 7. Turn left toward Mirror Lake Rd - 0.1 mi 8. Continue onto Mirror Lake Rd - 213 ft 9. Mirror Lake Rd, Westmond, Idaho

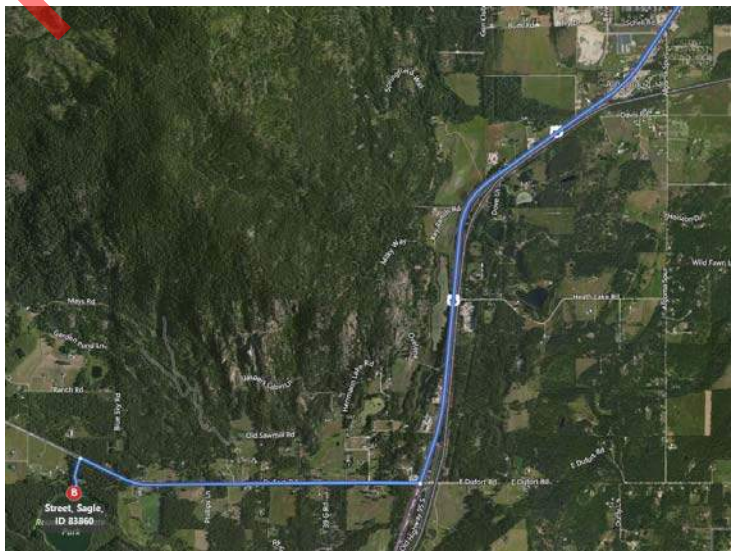

Preliminary Draft for Agency Review

Bottle Bay Bridge Boat Ramp

Back to boat ramp map

US95 471.08

Site Lat Long:	48.230089 -116.537762 (http://www.google.com/maps/place/48.230089,-116.537762)
Strategy Objective:	Boat Launch. Access only.
Site Safety Note:	Slip, trip, fall hazards; traffic/roadway hazards, congestion, water hazards, hazards from spilled material. Expect extreme winter conditions from middle of November to middle of March. Complete a task specific Job Safety Analysis
Staging Area:	Limited parking along road on narrow shoulder with adjacent gravel boat ramp. Boat ramp best suited for smaller sized boats and trailers. Gravel boat ramp.
Field Notes:	Boat ramp may require 4WD during periods of snow or rain. Ramp may not be usable in winter.

Directions to Site

1. Head south on N Fifth Ave toward Cedar St - 0.2 mi 2. Turn left onto Pine St - 0.3 mi 3. Turn right onto S 1st Ave - 0.2 mi 4. Turn left onto E Superior St - 0.5 mi 5. Merge onto US-95 S - 2.5 mi 6. Turn left onto Bottle Bay Rd - 0.1 mi 7. 140 Bottle Bay Road, Sagle, Idaho

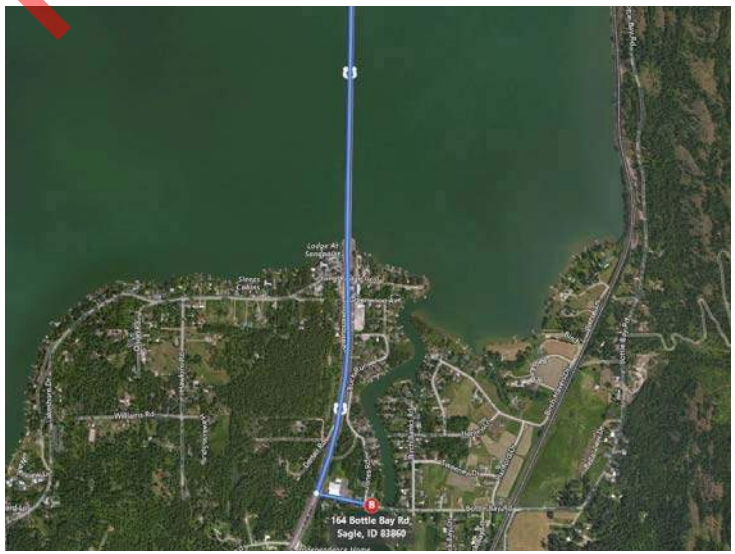

Preliminary Draft for Agency Review

Bottle Bay Marina Boat Ramp

Back to boat ramp map

US95 471.65

Site Lat Long:	48.238042 -116.445367 (http://www.google.com/maps/place/48.238042,-116.445367)
Strategy Objective:	Boat Launch. Access only.
Site Safety Note:	Slip, trip, fall hazards; traffic/roadway hazards, congestion, water hazards, hazards from spilled material. Expect extreme winter conditions from middle of November to middle of March. Complete a task specific Job Safety Analysis
Staging Area:	Large, well taken care of, boat ramp, though it has no parking area. Concrete boat ramp.
Field Notes:	Ramp may not be usable in winter

Directions to Site

1. Head south on N Fifth Ave toward Cedar St - 0.2 mi 2. Turn left onto Pine St - 0.3 mi 3. Turn right onto S 1st Ave - 0.2 mi 4. Turn left onto E Superior St - 0.5 mi 5. Merge onto US - 95 S - 2.5 mi 6. Turn left onto Bottle Bay Rd - 8.1 mi 7. Turn left onto Resort Rd - 0.1 mi 8. 125 Resort Road, Sagle, Idaho

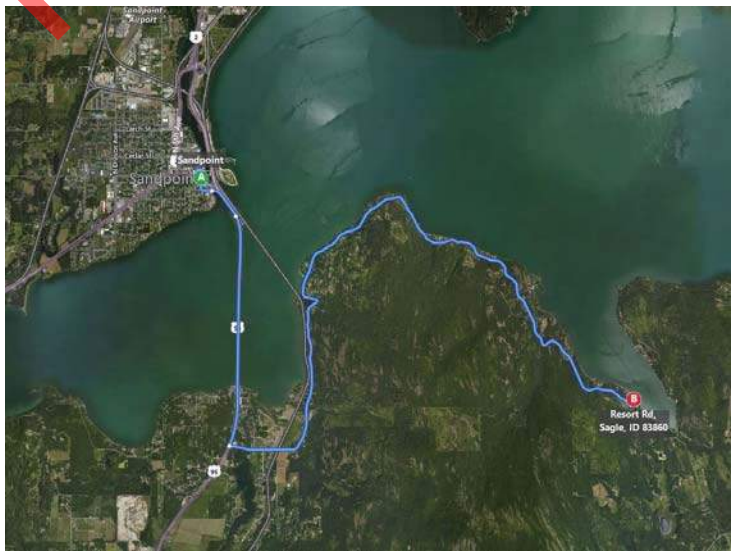

Preliminary Draft for Agency Review

Sourdough Point Boat Ramp

Back to boat ramp map

US95 472.98

Site Lat Long:	48.255446 -116.469042 (http://www.google.com/maps/place/48.255446,-116.469042)
Strategy Objective:	Boat Launch. Access only.
Site Safety Note:	Slip, trip, fall hazards; traffic/roadway hazards, congestion, water hazards, hazards from spilled material. Expect extreme winter conditions from middle of November to middle of March. Complete a task specific Job Safety Analysis
Staging Area:	Large staging and parking area Concrete boat ramp.
Field Notes:	Contact Water Treatment Operator: Robert Hanson 208-265-4270. Ramp may not be usable in winter

Directions to Site

1. Head south on N Fifth Ave toward Cedar St - 0.2 mi 2. Turn left onto Pine St - 0.3 mi 3. Turn right onto S 1st Ave - 0.2 mi 4. Turn left onto E Superior St - 0.5 mi 5. Merge onto US - 95 S - 2.5 mi 6. Turn left onto Bottle Bay Rd - 6.2 mi 7. Turn left onto Sourdough Ln - 0.1 mi 8. Turn right at the 1st cross street onto E Shoreline Ln - 69 ft 9. 22 East Shoreline Lane, Sagle, Idaho

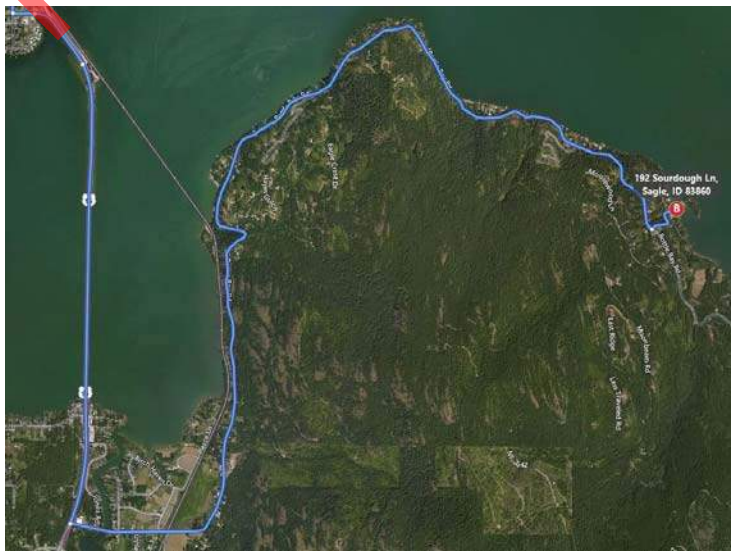

Preliminary Draft for Agency Review

Eagle Bay Ramp, Farragut State Park

Back to boat ramp map

SR54 14.65

Site Lat Long:	47.965026 -116.545805 (http://www.google.com/maps/place/47.965026,-116.545805)
Strategy Objective:	Boat Launch. Access only.
Site Safety Note:	Slip, trip, fall hazards; traffic/roadway hazards, congestion, water hazards, hazards from spilled material. Expect extreme winter conditions from middle of November to middle of March. Complete a task specific Job Safety Analysis
Staging Area:	Large boat ramp and staging area, plenty of room for parking. Concrete boat ramp.
Field Notes:	Located on Farragut State Park, $10 per vehicle out-of-state fee ($5 if you're an Idaho resident). Ramp may not be usable in winter

Directions to Site

1. Tale US-95 S for 18 mi 2. Turn left onto Bayview Rd- 3.7 mi 3. Continue onto E Careywood Rd- 0.7 mi 4. Turn right onto N Good Hope Rd/E Perimeter Rd- 2.4 mi 5. At the traffic circle, take the 3rd exit onto ID-54 E- 2.8 mi 6. Slight right onto Blackwell Cir Dr/Locust Grove Rd-Park Entrance, continue to follow Blackwell Cir Dr- 0.6 mi 7. Turn right toward Launch Rd- 0.2 mi 8. Slight left onto Launch Rd

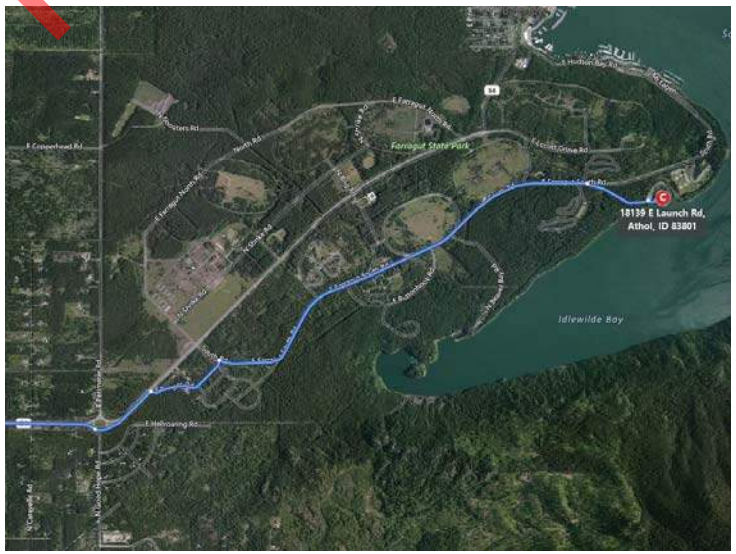

Preliminary Draft for Agency Review

Bayview Boat Ramp

Back to boat ramp map

SR54 15.57

Site Lat Long:	47.980766 -116.558464 (http://www.google.com/maps/place/47.980766,-116.558464)
Strategy Objective:	Boat Launch. Access only.
Site Safety Note:	Slip, trip, fall hazards; traffic/roadway hazards, congestion, water hazards, hazards from spilled material. Expect extreme winter conditions from middle of November to middle of March. Complete a task specific Job Safety Analysis
Staging Area:	Large boat launch and staging area in the town of Bayview. Concrete boat ramp.
Field Notes:	The boat launch it self doesn't have much of a staging area, but there are plenty of adjacent lots/parking area that would work just fine. Due to Farragut State park there is a $10 out-of-state fee to launch a boat from here ($5 if you're an Idaho resident). Ramp may not be usable in winter

Directions to Site

1. Tale US-95 S for 18 mi 2. Turn left onto Bayview Rd- 3.7 mi 3. Continue onto E Careywood Rd- 0.7 mi 4. Continue onto E Perimeter Rd- 2.4 mi 5. Slight right onto N Main Ave- 0.2 mi 6. Turn left onto Lakeside Ave- 230 ft 7. Turn right onto E Boileaus G Dock

Preliminary Draft for Agency Review

Sandpoint Veterans Memorial

Back to boat ramp map

Site Lat Long:	48.264697 -116.558078
Strategy Objective:	Boat Launch. Access only.
Site Safety Note:	Slip, trip, fall hazards; traffic/roadway hazards, congestion, water hazards, hazards from spilled material. Expect extreme winter conditions from middle of November to middle of March. Complete a task specific Job Safety Analysis
Staging Area:	Large parking area for vehicles and equipment adjacent to boat ramp. Concrete boat ramp.
Field Notes:	Ramp is unusable at low pool level. Photo unavailable.

Directions to Site: 1. Head north on S 1st Ave toward Lake St. 2. Turn left onto Lake St. 3. Turn left onto Euclid Ave. 4. Turn right onto Lakeview Blvd. 5. Turn left into parking lot.

Preliminary Draft for Agency Review

Appendix G Other Geographic Response Plans—Rosetta Stone

Preliminary Draft for Agency Review

Site ID & Highway Milepost	Railroad Milepost	Site Name	DEQ Approach	Corresponding BNSF Strategy	BNSF Approach	MRL Site Designator	MRL Site Name	MRL Strategy
Sector 1A West Pend Oreille								
US2 0.30	POVA 1430.86	Oldtown Boat Launch	Contaminant Collection	POVA 1430.8 / 0.3	Collection and Recovery	–	–	–
US2 2.0	POVA 1428.59	Albeni Falls Dam	Contaminant Collection	POVA 1428.7 / 2.0	Notification Only	LPO1_29.23	Albeni Falls Dam	Collection and Recovery
US2 2.21	POVA 1428.66	Albeni Cove Recreation Area	Contaminant Collection	POVA 1428.6 / 2.2	Collection and Recovery	–	–	–
Sector 1B West Pend Oreille Fire District								
US2 5.73	POVA 1424.79	10th St Surface Water	Exclusion	–	–	–	–	–
US2 6.2	POVA 1424.31	Priest River-South	Contaminant Collection	POVA 1421.6 / 6.3	Collection and Recovery	LPO1_20.2	Priest River Slough #1	Exclusion
US2 6.38	POVA 1424.13	Priest River City Water Intake	Exclusion	POVA 1424.1 / 6.5	Deflection	LPO1_24.86	Priest River Boat Ramp	Collection and Recovery; Does Not Address City Water Intake
US2 6.87	POVA 1423.64	Priest River Mouth	Exclusion	–	–	LPO1_24.52	Priest River Trestle	Exclusion
US2 7.59	POVA 1423.0	Priest River Mouth Slough	Exclusion; Very Long Booms	–	–	LPO1_23.55	Priest River Slough #3	Exclusion
US2 10.19	POVA 1420.46	Carey Creek Game Management Area	Deflection	–	–	LPO1_21.68	Priest River Slough #2 (This is incorrectly named)	Exclusion

Preliminary Draft for Agency Review

Site ID & Highway Milepost	Railroad Milepost	Site Name	DEQ Approach	Corresponding BNSF Strategy	BNSF Approach	MRL Site Designator	MRL Site Name	MRL Strategy
US2 10.52	POVA 1420.12	Baylor Lane Slough	Exclusion	–	–	LPO1_20.7	Priest River Slough #1 (This is incorrectly named)	Exclusion
Sector 2 Westside Fire								
US2 13.3	POVA 1417.28	Riley Creek Slough	Contaminant Collection	POVA 1417.1 / 13.4	Collection and Recovery	LPO1_18	Riley Creek	Exclusion
US2 13.49	POVA 1417.06	Riley Creek Recreation Area	Contaminant Collection	–	–	–	–	–
US2 14.37	POVA 1416.24	Laclede Public Water Supply	Exclusion	POVA 1416.4 / 14.3	Deflection	–	–	–
US2 16.06	UP Spokane Railroad 62.78	Cocolalla Creek Mouth	Exclusion	UP MP 63.1 HMP 16.1 Dufort Road Bridge	Collection/Recovery Location Is Further Inland than DEQ GRP or MRL GRP	LPO1_14.82	Morton Slough - error; this is misnamed in the MRL GRP Correct geographical name is Cocolalla Creek Mouth	Deflection
US2 16.29	UP Spokane Railroad 63.14	Morton Slough Boat Launch	Contaminant Collection	POVA 63.2 / 16.2	Collection and Recovery	–	–	–
–	–	–	–	–	–	LPO1_14.13	Laclede Slough	Exclusion
US2 17.12	POVA 1413.35	Morton Slough Game Management Area	Exclusion	–	–	LPO1_13.48	Upper Morton Slough	Exclusion

Preliminary Draft for Agency Review

Site ID & Highway Milepost	Railroad Milepost	Site Name	DEQ Approach	Corresponding BNSF Strategy	BNSF Approach	MRL Site Designator	MRL Site Name	MRL Strategy
–	–	–	–	–	–	LPO1_12.46	Johnson Creek Slough	Exclusion
–	–	–	–	–	–	LPO1_11.06	Gypsy Bay	Exclusion
US2 20.71	POVA 1409.86	Bay near Muskrat lake	Exclusion	–	–	LPO1_9.66	Bay Near Muskrat Lake	Exclusion
–	–	–	–	–	–	LPO1_9.28	Smith Creek Slough	Exclusion
–	–	–	–	–	–	LPO1_8.01	Pend Oreille Union Pacific Railroad Trestle	Collection and Recovery
–	–	–	–	–	–	LPO1_8.02	Snug Harbor Slough	Exclusion
–	–	–	–	–	–	LPO1_6.73	Hornby Creek Mouth	Deflection
US2 24.89	BNSF Newport 71.01	Dover Bay Slough	Exclusion	–	–	LPO1_6.12	Dover Slough	Exclusion
–	–	–	–	–	–	LPO1_5.65	Springy Point Slough	Exclusion
US2 25.16	BNSF Newport 71.31	Dover Bay Marina	Contaminant Collection	BNSF 71.4 / 25.2	Collection and Recovery	–	–	–
US2 25.63	BNSF Newport 71.87	Dover Bay Water Intake	Exclusion	BNSF 71.7 / 25.5	Deflection	LPO1_5.3	Dover water intake	Deflection
Sector 3A Sandpoint								
US2 26.68	BNSF Newport 72.79	Chuck Slough	Collection and Recovery	–	–	LPO1_4.22	Chuck Slough	Exclusion

Preliminary Draft for Agency Review

Site ID & Highway Milepost	Railroad Milepost	Site Name	DEQ Approach	Corresponding BNSF Strategy	BNSF Approach	MRL Site Designator	MRL Site Name	MRL Strategy
US2 27.07	BNSF Newport 73.29	Ontario St West	Collection and Recovery	BNSF 73.3 / 27.1	Collection and Recovery	–	–	–
US2 27.17	BNSF Newport 73.33	Ontario St East	Contaminant Collection	BNSF 73.3 / 27.1	Collection and Recovery	–	–	–
US2 27.74	BNSF Spokane 3.32	S. Ella Ave Culvert	Collection and Recovery	–	–	–	–	–
Sector 3B Sandpoint								
US2 28.02	BNSF Spokane 3.33	Memorial Park Culvert	Collection and Recovery	–	–	–	–	–
US2 28.17	BNSF Spokane 3.35	S Euclid Ave Culvert	Collection and Recovery	–	–	–	–	–
US2 28.31	BNSF Spokane 3.37	S 4th Ave Culvert	Collection and Recovery	–	–	–	–	–
US2 28.36	BNSF Spokane 3.38	S 3rd Ave Culvert	Collection and Recovery	–	–	–	–	–
US95 472.85	BNSF Spokane 4.28	Long Bridge	Collection and Recovery	BNSF 4.3 / 472.8	Collection and Recovery	LPO1_1.37	Sandpoint	Collection and Recovery Between RR and Highway Longbridges; Very Confusing Strategy That Won't Work

Preliminary Draft for Agency Review

Site ID & Highway Milepost	Railroad Milepost	Site Name	DEQ Approach	Corresponding BNSF Strategy	BNSF Approach	MRL Site Designator	MRL Site Name	MRL Strategy
US95 473.84	BNSF Spokane 3.4	Sandpoint Public Works Water Intake	Exclusion	BNSF 3.2 / 474.3	Exclusion	–	–	–
US95 473.9	BNSF Spokane 3.17	Sandpoint City Beach and Marina	Collection and Recovery	BNSF 3.1 / 474.4	collection and recovery	LPO1_0.14	Sandpoint City Beach	Deflection
US95 473.91	BNSF Spokane 3.29	Mouth of Sand Creek	Collection and Recovery	–	–	–	–	–
US95 474.31	BNSF Spokane 3.13	Lower Sand Creek	Collection and Recovery	–	–	LPO1_0.2	Sand Creek	Collection and Recovery
Sector 3C Sandpoint								
US95 474.41	BNSF Spokane 3.02	E. Cedar St Culvert # 1	Collection and Recovery	–	–	–	–	–
US95 474.45	BNSF Spokane 2.98	E. Cedar St Culvert # 2	Collection and Recovery	–	–	–	–	–
US95 474.46	BNSF Spokane 2.97	E. Cedar St Culvert # 3	Collection and Recovery	–	–	–	–	–
US95 474.78	BNSF Spokane 2.9	Alder St Culvert	Collection and Recovery	–	–	–	–	–
US95 475.09	BNSF Kootenai 1402.96	N. 5th Ave Surface Water Outflow #1	Collection and Recovery	–	–	–	–	–
Sector 3D Sandpoint								
US95 475.21	BNSF Kootenai	N. 5th Ave Surface Water	Collection and Recovery	–	–	–	–	–

Preliminary Draft for Agency Review

Site ID & Highway Milepost	Railroad Milepost	Site Name	DEQ Approach	Corresponding BNSF Strategy	BNSF Approach	MRL Site Designator	MRL Site Name	MRL Strategy
	1402.75	Outflow #2						
US95 475.22	BNSF Kootenai 1402.74	N. 5th Ave Surface Water Outflow #3	Collection and Recovery	–	–	–	–	–
US95 475.3	BNSF Kootenai 1402.66	Sand Creek Trestle	Collection and Recovery	–	–	MRL4z_118.27	Sand Creek Trestle	Collection and Recovery
US95 475.32	BNSF Kootenai 1402.63	Visitor Center Culvert #1	Collection and Recovery	–	–	–	–	–
US95 475.34	BNSF Kootenai 1402.6	Visitor Center Culvert #2	Collection and Recovery	–	–	–	–	–
US95 475.4	BNSF Kootenai 1402.58	Visitor Center Culvert # 3	Collection and Recovery	–	–	–	–	–
US95 475.41	BNSF Kootenai 1402.55	Visitor Center Culvert # 4	Collection and Recovery	–	–	–	–	–
US95 475.42	BNSF Kootenai 1402.57	Baldy Mountain Rd Surface Water Outflow #2	Collection and Recovery	–	–	–	–	–
US95 475.5	BNSF Kootenai 1402.53	Baldy Mountain Rd Surface Water Outflow #1	Collection and Recovery	–	–	–	–	–
US95 475.53	BNSF Kootenai 1402.33	N Boyer Ave and Baldy Mountain Rd.	Collection and Recovery	–	–	–	–	–
Sector 4A Northside (Lakeshore)								

Preliminary Draft for Agency Review

Site ID & Highway Milepost	Railroad Milepost	Site Name	DEQ Approach	Corresponding BNSF Strategy	BNSF Approach	MRL Site Designator	MRL Site Name	MRL Strategy
–	–	Sandcreek Bike Path	–	MP 402.5 [HMP 475.6]	Collection and Recovery	–	–	–
–	–	Baldy Mountain Road Culvert	–	MP 75.0 [HMP 475.6]	Collection and Recovery	–	–	–
US95 478.53	BNSF Kootenai 1399.09	Bronx Rd	Collection and Recovery	BNSF 1399.1 / 478.5	Collection and Recovery	–	–	–
US95 479.99	BNSF Kootenai 1399.67	Sand Creek Water Treatment Plant	Notification Only	–	–	–	–	–
SR200 33.15	MRL4 114.92	Boyer Slough	Collection and Recovery	–	–	MRL4z_114.94	Boyer Slough	Collection and Recovery
SR200 34.53	MRL 113.5	Oden Water Assn Water Intake	Exclusion	MRL 13.6 / 34.4	Notification Only	MRL4z_113.49	Kootenai Bay	Notification and Exclusion But Does Not Address Water Intake
SR200 34.98	MRL4 113.0	Culver Slough	Exclusion	–	–	MRL4z_113.09	Culver Slough	Exclusion
SR200 36.39	MRL4 109.77	Pend Oreille State Wildlife Management Area	Exclusion	–	–	MRL4z_110.29	Pend Oreille State Wildlife Mgmt Area	Exclusion Actual Location Is Different than for DEQ Approach
SR200 38.69	MRL 109.93	Pack River Bridge	Exclusion	MRL 109.6 / 38.6	Collection and Recovery	–	–	–
SR200 41.28	MRL4 107.49	Sunnyside Water Intake	Exclusion	MRL 108.2 / 40.6	Notification Only	MRL4z_107.39	Sunnyside (does not address water	Exclusion

Preliminary Draft for Agency Review

Site ID & Highway Milepost	Railroad Milepost	Site Name	DEQ Approach	Corresponding BNSF Strategy	BNSF Approach	MRL Site Designator	MRL Site Name	MRL Strategy
							intake)	
Sector 4B Northside (Selle Valley)								
US95 480.44	BNSF Kootenai 1397.09	West Selle Rd	Collection and Recovery	BNSF 1397.1 / 480.5	Collection and Recovery	–	–	–
US95 484.17	BNSF Kootenai 1393.33	East Colburn	Collection and Recovery	–	–	–	–	–
US95 485.77	BNSF Kootenai 1391.75	Lower Pack River	Collection and Recovery	BNSF 85.0 / 485.7	Collection and Recovery	–	–	–
SR200 37.78	MRL 111.05 UP 81.9	Rapid Lightning Road Bridge	Collection and Recovery	UP 82.3 / 37.7	Collection and Recovery	–	–	–
Sector 5 Sam Owen Fire								
SR200 40.78	MRL4 107.95	Pack River Trestle	Exclusion	MRL 107.9 / 40.8	Exclusion	MRL4z_108.35	Pack River Trestle	Exclusion
SR200 42.09	MRL4 106.71	Trestle Creek	Exclusion	–	–	–	–	–
–	–	–	–	–	–	MRL4z_106.21	Trestle Creek Boat Ramp	Exclusion; Address Boat Ramp, Not Trestle Creek Stream
SR200 46.4	MRL4 102.4	Red Fir Resort Water Intake	Exclusion	MRL 102.6 / 46.2	Notification Only	MRL4z_102.47	East Hope Peninsula	Exclusion

Preliminary Draft for Agency Review

Site ID & Highway Milepost	Railroad Milepost	Site Name	DEQ Approach	Corresponding BNSF Strategy	BNSF Approach	MRL Site Designator	MRL Site Name	MRL Strategy
–	–	–	–	–	–	MRL4z_100.85	Sam Owen Campground	Exclusion
SR200 48.08	MRL4 100.86	Islandview Resort Water Intake	Exclusion	MRL 100.6 / 48.2	Notification Only	–	–	–
SR200 49.45	MRL4 99.36	Kullyspell Estates Water Intake	Exclusion	MRL 99.4 / 49.5	Notification Only	MRL4z_99.44	Sam Owen South Bay	Exclusion
SR200 50.19	MRL4 98.52	David Thompson Wildlife Preserve	Exclusion	MRL 98.5 / 50.3	Notification Only	–	–	–
SR200 50.4	MRL4 98.43	Denton Slough	Exclusion	MRL 98.4 / 50.4	Notification Only	MRL4z_98.46	Denton Slough	Collection and Recovery
Sector 6 Clark Fork								
SR200 54.83	MRL4 94.47	Johnson Creek Trestle	exclusion	–	–	MRL4z_94.52	Johnson Creek Trestle	Exclusion. Identical to the brainstorming we did with F&G on 4/12/16. See page 271. Only called for 650 ft of curtain boom.
–	–	–	–	–	–	–	–	–
SR200 54.50	MRL 94.26	Mouth of the Clark Fork	Diversion with Collection Downstream	–	–	MRL4z_97.35	Mouth of the Clark Fork	Collection and Recovery

Preliminary Draft for Agency Review

Site ID & Highway Milepost	Railroad Milepost	Site Name	DEQ Approach	Corresponding BNSF Strategy	BNSF Approach	MRL Site Designator	MRL Site Name	MRL Strategy
SR200 56.05	MRL4 92.92	Clark Fork Bridge	Collection and Recovery	MRL 93.0 / 56.0	Collection and Recovery	MRL4z_93.62	Clark Fork, ID Trestle	Collection and Recovery
SR200 57.12	MRL4 91.79	Lower Fish Hatchery Slough	Exclusion	–	–	MRL4z_91.83	Lower Fish Hatchery Slough	Exclusion
SR200 58.62	MRL4 90.45	Upper Fish Hatchery Slough	Deflection	–	–	MRL4z_90.56	Upper Fish Hatchery Slough	Exclusion
–	–	–	–	–	–	MRL4z_89.31	Twin Creek	Exclusion
SR200 60.79	MRL4 87.66	Clark Fork River Access	Contaminant Collection	MRL 87.7 / 61.3	Collection and Recovery	–	–	–
SR200 61.63	MRL4 86.81	Cabinet Gorge Fish Hatchery	Collection and Recovery	MRL 86.8 / 61.7	Notification Only	MRL4z_86.79	Cabinet Gorge Fish Hatchery	Collection and Recovery
SR200 62.95	MRL4 85.35	Cabinet Gorge Dam	Contaminant Collection	MRL 85.4 / 63.0 (action) MRL 85.7 / 62.7 (notification only)	Notification & Contaminant Collection Upstream of Dam, and Notification Only at the Dam	MRL4z_85.35	Cabinet Gorge Dam	Collection and Recovery
Sector 7A Sagle (South)								
–	–	Lake Pend Oreille - Open Water Recovery	–	MP 96.9 [HMP 51.7]	Collection and Recovery	–	–	–
US95 461.32	BNSF Spokane 16.94	Cocolalla Creek Trestle	Collection and Recovery	MP 16.9 [HMP461.3]	Collection and Recovery	–	–	–

Preliminary Draft for Agency Review

Site ID & Highway Milepost	Railroad Milepost	Site Name	DEQ Approach	Corresponding BNSF Strategy	BNSF Approach	MRL Site Designator	MRL Site Name	MRL Strategy
–	–	–	HWY 95 [Cocolalla Creek South Of BNSF 16.9]	BNSF 20.6 [HMP 458.2]	Collection and Recovery	–	–	–
US95 463.82	BNSF Spokane 14.22	Cocolalla Creek Outlet	Exclusion	–	–	–	–	–
US95 463.95	BNSF Spokane 14.07	Cocolalla Loop Rd Bridge	Contaminant Collection	BNSF 14.2 / 463.9	Collection and Recovery	–	–	–
Sector 7B Sagle (North)								
US95 471.08	BNSF Spokane 6.7	Bottle Bay Bridge	Exclusion	BNSF 6.6 / 471.0	Collection and Recovery	–	–	–
–	–	Waterlife Discovery Center Sandpoint Fish Hatchery	–	BNSF 7.4 / 470.5	Notification Only	LPO1_3.42	Sandpoint Fish Hatchery	Exclusion
US95 472.98	BNSF 4.4	Sourdough Point Water Intake	Exclusion	BNSF 4.4 / 473.1	Notification Only	–	–	–

Preliminary Draft for Agency Review